# Foundation for Cross-Connection Control and Hydraulic Research

# List of Approved Backflow Prevention Assemblies

24 October 2018

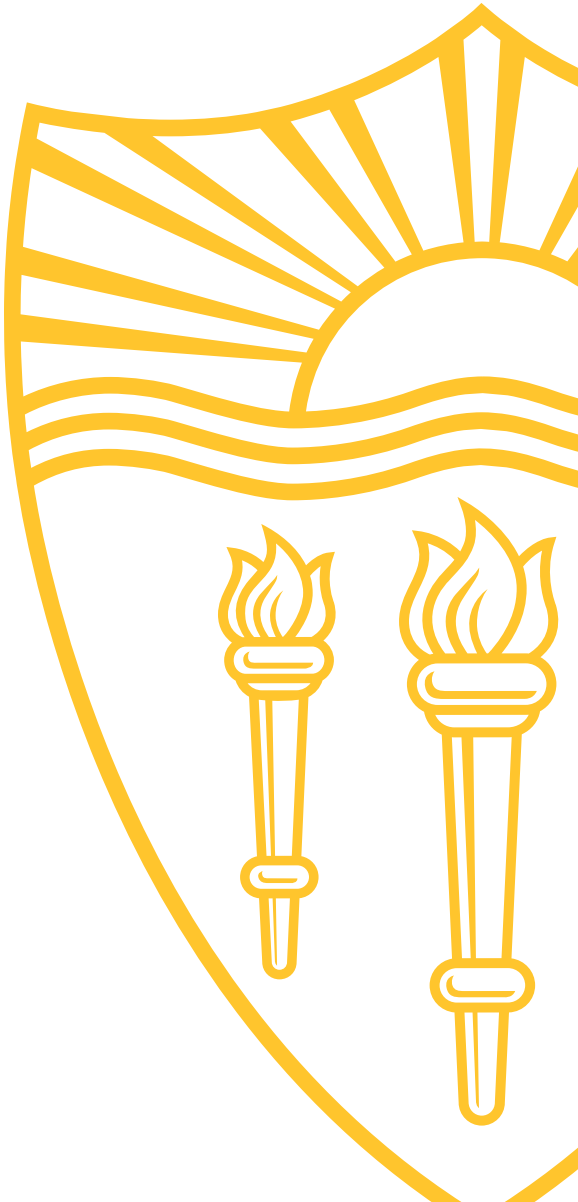

USC University of Southern California

The List of Approved Backflow Preventions Assemblies is published by
the Foundation for Cross-Connection Control and Hydraulic Research
a Division of the University of Southern California

2018 © University of Southern California
All Rights Reserved

# Table of Contents


| | |
|---|---|
| Legend | 4 |
| Notices | 5 |
| Orientation of Assemblies | 6 |
| Shutoff Valve Designation | 7 |
| Detector Assembly Meters | 11 |
| Special Notices | 12 |
| Atmospheric Vacuum Breaker (AVB) | 13 |
| Double Check Valve Assembly (DC) | 14 |
| Double Check-Detector Assembly (DCDA) | 215 |
| Double Check-Detector Assembly-Type II (DCDA-II) | 348 |
| Pressure Vacuum Breaker Assembly (PVB) | 358 |
| Reduced Pressure Principle Assembly (RP) | 374 |
| Reduced Pressure Principle-Detector Assembly (RPDA) | 573 |
| Reduced Pressure Principle-Detector Assembly-Type II (RPDA-II) | 618 |
| Spill-Resistant Pressure Vacuum Breaker Assembly (SVB) | 625 |
| Manufacturers of Approved Backflow Prevention Assemblies | 628 |

# Legend

*Type of Backflow Prevention Assembly*

*Assembly Manufacturer*

*Model of the Assembly*

*Size of the Assembly (inches)*

*Approved Installation Orientation(s) (see page 6)*

*Approved Water Meters for this Model Assembly (detector assemblies only)*

**Type:** DCDA

**Size:** 2 1/2

**Manufacturer:** Ames

**Orientation:** H

**Model:** LFColt 300BF

**Meters:** (O)

**Manual:** 9

**Approved:** 08-Jan-2014

**Shutoffs:** (yyy)

**Notes:** Lead free compliant version identified with NSF61 mark on meter

**0.25% Pb:** Yes

**Renewed:** 08-Jan-2017

**Spare Parts Only:** No

**Bypass:** Watts LF007M3QT 3/4" (H), Ames LF2000BM3 3/4" (H)

*Date Assembly was Renewed*

*Additional Information about Assembly*

*Does it Meet the ≤ 0.25 % Lead Requirement?*

*Bypass(es) Approved for the Assembly*

*Only Spare Parts Available for the Assembly Since the Assembly Itself is no Longer Being Manufactured.*

*Y= only spare parts available*

*N= the assembly itself is available along with spare parts*

*Shutoff Valve(s) Approved for the Assembly*

*Date Assembly was Approved*

*Edition of the Manual under which the Assembly was Approved*



2018 © University of Southern California

# Notices

**NOTICE REGARDING RENEWALS:**
The original Certificate of Approval–identified by the Edition of the Manual and the approval date shown in this list is valid as of the date of this list, only if the original or renewal date shown hereon is within three (3) years of the date of this list. The responsibility to request a renewal of an Approval is that of each manufacturer. The USC Foundation retains the right of determining the extent of re-evaluation required before renewal is granted. Certificates of Approval are not recalled for the purpose of updating the effective date. This revision of date is only published via the current *List of Approved Backflow Prevention Assemblies*.

**NOTICE REGARDING INSTALLATION:**
Unless otherwise specified by the manufacturer all assemblies are to be installed on cold potable water applications - below 110°F. Also all of the assemblies listed are Approved for the **INDICATED ORIENTATION(S) ONLY** (please see the legend page 6). Rotation of assemblies on either axis will invalidate the USC Foundation's Approval. Use of spare parts other than those of the original manufacturer invalidates the Approval. Rotation of shutoff valves of one bolt hole only is permitted only for the 2 1/2" and larger flanged assemblies.

**NOTICE REGARDING LEAD CONTENT:**
In order to determine if backflow preventers comply with lead-free requirements of several states and the Safe Drinking Water Act, USC Foundation Approved assemblies which comply with the ≤ 0.25% lead requirement are indicated by a Y in the column ≤ 0.25%Pb.

**NOTICE REGARDING LIST UPDATES:**
The List of Approved Assemblies is printed annually in the first quarter of the year. Update notices are printed and sent to USC Foundation Members quarterly. The most recent changes to the List may be found on the USC Foundation's website. The web version of the List is updated each time a change is made.

# Orientation of Assemblies

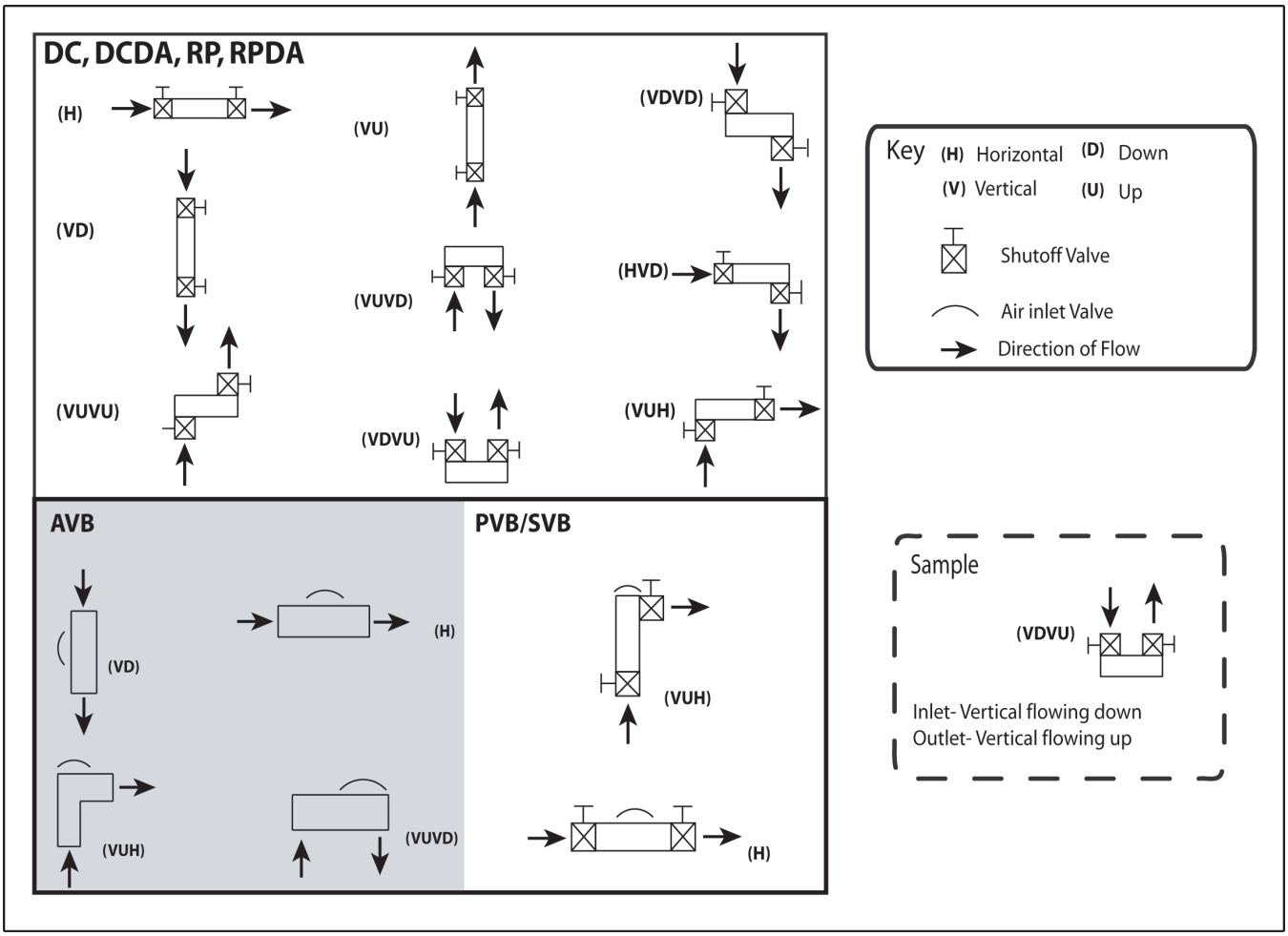



2018 © University of Southern California

# Shutoff Valve Designation

Each backflow prevention assembly has been evaluated with a specific set of shutoff valves as an integral part of the assembly. The specific shutoff valves are coded by a parenthetic code with each assembly. This coding of shutoff valves is defined below. Other shutoff valves having similar performance characteristics which permit the assembly to comply with the standards are also shown immediately after the original shutoff valves. The use of any shutoff valve, other than those listed for that specific assembly invalidates the Approval. Assemblies listed with a Y in the "spare parts only" column may not include the shutoff valve designation.

| | |
|---|---|
| (aa) | American Figure 1-QT |
| (bb) | American Figure 17-NRS RW |
| (cc) | American Figure 370OSY RW |
| (dd) | Apollo Series 7B-QT |
| (ee) | AVK Series 25-NRS |
| (ff) | AVK Series 25-OSY (Nibco F607RW OSY) |
| (gg) | Clow R/W Model 2640 (FxF) - NRS |
| | (formerly Clow R/W F6102-NRS) |
| (hh) | Clow R/W Model 2640 (FxF) - OSY |
| | (formerly Clow R/W F6136-OSY) |
| (ii) | Fortune Series 620/623 (C84400 Bronze) (Formerly Figure 601) |
| | Private labeled as: Ames, Buckner, Febco, Flomatic, Hersey and Wilkins |
| (jj) | Kennedy Ken Seal I-NRS |
| (kk) | Kennedy Ken Seal-OSY |
| (ll) | Kennedy Model KS-FW Figure 8561 (FxF) - NRS (2 1/2" - 10") |
| | Kennedy Model KS-RW Figure 7561 (FxF) - NRS (4" - 10") |
| | (formerly Kennedy Ken Seal II-NRS) |
| (mm) | Kennedy Model KS-FW Figure 8068 (FxF) - OSY (2 1/2" - 10") |
| | Kennedy Model KS-RW Figure 7068 (FxF) - OSY (4" - 10") |
| | (formerly Kennedy Ken Seal II-OSY) |
| (nn) | Lee Brass-QT |
| (oo) | Watts 405-RW |
| (pp) | Watts 408-OSY |
| (qq) | Mueller R/W HP NRS |
| (rr) | Mueller R/W HP OSY |
| (ss) | Toro.Orion Integral Ball Valve-QT |
| (tt) | American Flow Control (Waterous) Series 500-NRS |
| (uu) | American Flow Control (Waterous Series 500-OSY) |
| (vv) | Watts Figure FBV (FBV-E)-QT [Ames Figure FBV (FBV-E)-QT] |
| (ww) | Watts G4000FDA-QT |
| (xx) | Watts Series 6080 (& 6080-E)-QT |
| (yy) | Matco-Norca 10RW (NRS) |
| (zz) | Matco-Norca 105U (OSY) |
| (aaa) | American Flow Control Series 2500-NRS |
| (bbb) | American Flow Control Series 2500-OSY |
| (ccc) | M&H Model 4067-02 (NRS) |
| (ddd) | M&H Model 4068-02(OSY) |
| (eee) | Stockham Model G-610 (OSY) |

2018 © University of Southern California

# Shutoff Valve Designation

| | |
|---|---|
| (fff) | Febco Series 620 QT |
| (ggg) | Fortune Figure 620U-QT |
| (hhh) | Watts Model 5-FBV & 5-FBV-E (1/4" - 1" Ball Valve QT) |
| (iii) | Mueller Model A2360-NRS |
| (int) | Shutoff Valve is integral part of assembly |
| (jjj) | Febco Series 621-QT |
| (kkk) | Febco Series 620U-QT |
| (lll) | Mueller Model R2360-OSY |
| (mmm) | Conbraco Series IBVE-125-QT |
| (nnn) | Kennedy Model KS-FW Figure 8701 (FxF) - NRS (3” - 10”) Post Indicator/Tapping |
| | Kennedy Model KS-RW Figure 7701 (FxF) - NRS (4” - 10”) Post Indicator/Tapping |
| | (formerly Kennedy Ken Seal II Post Indicator/Tapping) |
| (ooo) | Ningbo Ball Valves (Febco 622F & 622FT, Watts Series 855-QT & Wilkins Series 850-QT)(1/4” - 2” Ball Valve QT) |
| (ppp) | Clow R/W Model 2639 (GxF) - NRS (2 1/2” - 3”) |
| | Clow R/W Model 2638 (GxF) - NRS (4” - 10”) |
| (qqq) | Clow R/W Model 2639 (GxF) - OSY (2 1/2” - 3”) |
| | Clow R/W Model 2638 (GxF) - OSY (4” - 10”) |
| | (formerly Clow Series F6138-OSY) |
| (rrr) | Apollo Series 7B-308-01 (& 7B-308-31) |
| (sss) | Clow R/W Model 2639 (GxG) - NRS (2 1/2” - 3”) |
| | Clow R/W Model 2638 (GxFG) - NRS (4” - 10”) |
| | (formerly Clow Series F6104-NRS) |
| (ttt) | Clow R/W Model 2639 (GxG) - OSY (2 1/2” - 3”) |
| | Clow R/W Model 2638 (GxFG) - OSY (4” - 10”) |
| | (formerly Clow Series F6137-OSY) |
| (uuu) | Apollo Series 7H-QT |
| (vvv) | Clow R/W Model 2640 (FxF) - OSY Post Indicator/Tapping Valve |
| | (formerly Clow R/W F6136-OSY Post Indicator/Tapping Valve) |
| (www) | Clow R/W Model 2639 (GxF) - OSY (2 1/2” - 3”) Post Indicator/Tapping Valve |
| | Clow R/W Model 2640 (GxF) - OSY (4” - 10”) Post Indicator/Tapping Valve |
| | (formerly Clow R/W F6138-OSY Post Indicator/Tapping Valve) |
| (xxx) | Ningbo Union Ball Valves (Febco 622UF & 622UFT & Wilkins 850U-QT)(1/2" - 2" Ball Valve QT) |
| (yyy) | Victaulic Series 702 (Butterfly valves) |
| (zzz) | Kennedy Model KS-RW Figure 7092ABF (FxG) - OSY |
| | (formerly Kennedy Series 7092ABF-OSY) |
| (aaaa) | Union Model GV12 (flange by groove)-OSY |
| (bbbb) | Enbee Model GV12 (flange by groove)-OSY |
| (cccc) | Kennedy Model KS-RW Figure 7092 (FxG) - OSY |
| | (formerly Kennedy Series 7092 (GxF) - OSY) |
| (dddd) | Kennedy Model KS-RW Figure 7592 (FxG) - NRS |
| | (formerly Kennedy Series 7592ABF - NRS) |
| (eeee) | Kennedy Model KS-RW Figure 7592PABF (FxG) - NRS Post Indicator/Tapping Valve |
| | (formerly Kennedy Series 7592PABF-Post Indicator/Tapping Valve) |
| (ffff) | Watts 409RW (FxF)- OSY |


2018 © University of Southern California

# Shutoff Valve Designation

| | |
|---|---|
| (gggg) | Watts 409RW (FxG)- OSY |
| (hhhh) | Watts Figure LF-FBV-QT (1/2”-2”) |
| (iiii) | Wilkins Series 850XL (850TXL) - QT |
| (jjjj) | Watts 409 RW 2” - OSY |
| (kkkk) | Kennedy Model KS-RW Figure 7093 (GxG) - OSY |
| (llll) | Kennedy Model KS-RW Figure 7593 (GxG) - NRS |
| (mmmm) | Kennedy Model KS-RW Figure 7093ABF (GxG) - OSY |
| (nnnn) | Kennedy Model KS-RW Figure 7593ABF (GxG) - NRS |
| (oooo) | Kennedy Model KS-RW Figure 7593PABF (GxG) - NRS Post Indicator |
| (pppp) | Watts Figure L-FBV-QT, Ames Figure L-FBV-QT, FEBCO Figure L-FBV-QT |
| (qqqq) | Kennedy Figure G300E - Butterfly Valve (2 1/2”-6”) |
| (rrrr) | Kennedy Figure 02G - Butterfly Valve (8”) |
| (ssss) | Wilkins Model 48 (GXF) - NRS (2-1/2” - 12”) |
| (tttt) | Wilkins Model 48 (FXF) - NRS (2-1/2” - 12”) |
| (uuuu) | Wilkins Model 48 (GXG) - NRS (2-1/2” - 12”) Post Indicator/Tapping Valve |
| (vvvv) | Wilkins Model 48 (GXF) - NRS (2-1/2” - 12”) Post Indicator/Tapping Valve |
| (wwww) | Wilkins Model 48 (FXF) - NRS (2-1/2” - 12”) Post Indicator/Tapping Valve |
| (xxxx) | Wilkins Model 48 (GXG) - OSY (2-1/2” - 12”) |
| (yyyy) | Wilkins Model 48 (GXF) - OSY (2-1/2” - 12”) |
| (zzzz) | Wilkins Model 48 (FXF) - OSY (2-1/2” - 12”) |
| (aaaaa) | Wilkins Model 48 (GXG) - NRS (2-1/2” - 12”) |
| (bbbbb) | Milwaukee BB-SC100 - Butterfly Valve |
| (ccccc) | Milwaukee BB-SCS02 - Butterfly Valve (with gearbox) |
| (ddddd) | Flomatic Model NRS |
| (eeeee) | Watts Model FBV-FP (FBV-E-FP)-QT |
| (fffff) | Watts L-FBV-QT (2 1/2” - 4”) |
| (ggggg) | Wilkins Model 850MSS |
| (hhhhh) | Fortune Series 620/623 (c89520 unleaded bronze) |
| (iiiii) | Apollo Series 77B-100 and 77C-100 - QT |
| (jjjjj) | Apollo Series 77BLF-100 and 77CLF-100 - QT |
| (kkkkk) | Wilkins Model 49 (GXF) - (2 1/2” - 10”) |
| (lllll) | Wilkins Model 49 (GXG) - (2 1/2” - 10”) |
| (mmmmm) | Wilkins 850UXL (850TUXL) -QT |
| (nnnnn) | Watts Model 405 (2 1/2" - 10" NRS-RW FxG) |
| (ooooo) | ARI HC260 and HC262 Ball Valves - QT |
| (ppppp) | Febco Model LF622UF & LF622UFT (1/2” - 2” Ball Valve QT) |
| (qqqqq) | Febco Model LF622F & LF622FT (1/2” - 2” Ball Valve QT) |
| (rrrrr) | Watts Model LFFBV-FRG & LFFBV-E-FRG (1/2” - 2” Ball Valve QT) |
| (sssss) | Apollo Series 91B and 91C-QT (1/2”-2”) |
| (ttttt) | Apollo Series 91BLF and 91CLF-QT (1/2”-2”) |
| (uuuuu) | Apollo Model 77B-LFU and 77C-LFU Union Ball Valves - QT (1/2”) |
| (vvvvv) | Apollo Series 91BLF-U and 91CLF-U-QT (3/4”-2”) |
| (wwwww) | Apollo Series 91B-U and 91C-U-QT (3/4”-2”) |

# Shutoff Valve Designation

| | |
|---|---|
| (xxxxx) | Apollo Model GV (FXG) - NRS (2-1/2” - 10”) |
| (yyyyy) | Apollo Model GV (GXG) - NRS (2-1/2” - 10”) |
| (zzzzz) | Apollo Model GV (FXG) - OSY (2-1/2” - 10”) |
| (aaaaaa) | Apollo Model GV (GXG) - OSY (2-1/2” - 10”) |
| (bbbbbb) | Apollo Model GV (FXF) - NRS (2-1/2” - 10”) |
| (cccccc) | Apollo Model GV (FXF) - OSY (2-1/2” - 10”) |
| (dddddd) | Apollo Model 77S-XT (1 1/2”-2” Ball Valve w/Gearbox) |
| (eeeeee) | Apollo Model 77S-LFXT (1 1/2”-2” Ball Valve w/Gearbox) |
| (ffffff) | ARI Model PLS-VA Ball Valves -QT (3/4”-2”) |
| (gggggg) | Wilkins Model 48 (GXF) - NRS (2-1/2” - 12”) |
| (hhhhhh) | Wilkins Model 48 (FXF) - NRS (2-1/2” - 12”) |
| (iiiiii) | Wilkins Model 48 (GXG) - NRS (2-1/2” - 10”) Post Indicator/Tapping Valve |
| (jjjjjj) | Wilkins Model 48 (GXF) - NRS (2-1/2” - 12”) Post Indicator/Tapping Valve |
| (kkkkkk) | Wilkins Model 48 (FXF) - NRS (2-1/2” - 12”) Post Indicator/Tapping Valve |
| (llllll) | Wilkins Model 48 (GXG) - OSY (2-1/2” - 10”) |
| (mmmmmm) | Wilkins Model 48 (GXF) - OSY (2-1/2” - 12”) |
| (nnnnnn) | Wilkins Model 48 (FXF) - OSY (2-1/2” - 12”) |
| (oooooo) | Wilkins Model 48 (GXG) - NRS (2-1/2” - 10”) |
| (pppppp) | Lansdale Model LPBLFB2 - Butterfly Valve (2”) |
| (qqqqqq) | AVK Series 25-21 (GXF) - NRS |
| (rrrrrr) | AVK Series 25-11 (GXG) - NRS |
| (ssssss) | AVK Series 25-26 (GXF) -OSY |
| (tttttt) | AVK Series 25-16 (GxG) - OSY |
| (uuuuuu) | Ames Model LFAFBV-FP-GV-T & LFAFBV-E-FP-GV-T (1” - 2” Thread x Groove Ball Valve w/Gearbox) |


2018 © University of Southern California

# Detector Assembly Meters

The Detector Assemblies contained herein have been evaluated with a specific meter as the detector element of the assembly. That specific meter is coded by a parenthetic letter shown in the “meters” column. The coding of meters is shown in this Section. Other meters having similar performance characteristics to permit the assembly to meet the Standard are shown immediately after the original evaluation meter. The use of any other meter or modified bypass piping invalidates the Approval.

Some of the detector assemblies use a line-size assembly, which is not a standard stock Approved assembly. Increased loads are required in these line-size units to allow the assembly to accurately record low flow rates in the bypass meter. Therefore, various off-the-shelf components can not be assembled and expected to perform satisfactorily. The bypass backflow preventer Approved with the detector assembly is listed under the bypass column. This is only for verification purposes. Should replacement parts or a complete bypass be needed, the model number of the complete detector assembly should be used in ordering these components.

| | |
|---|---|
| A | Hersey Model F-F 5/8” x 3/4” |
| B | Carlon 5/8” x 3/4” |
| C | Dandé Model D-3 5/8” x 3/4” |
| D | Gamon-Calmet 5/8” |
| E | Hays Acumeter 5/8” x 3/4” |
| F | Arad 5/8” x 3/4” (Master Meter) |
| G | Schlumberger 5/8” x 3/4” Model MBRF |
| H | Rockwell (Sensus) SR-II 5/8” x 3/4” |
| I | Hersey Model 430 - 5/8” |
| J | Elster AMCO Model C700 5/8”x3/4” (Formerly Kent, ABB) |
| K | Precision 5/8” |
| L | Neptune Trident 8 5/8” |
| M | Neptune T-10 5/8” (Lead free compliant version identified with NSF61 mark on meter) |
| N | Badger Model 25 3/4” |
| O | Badger 5/8” x 3/4” Model 25 (Lead free compliant version identified with NSF61 mark on meter) |
| P | Hersey Model 430 Series II 5/8” |
| Q | Hersey Model MVR-30 3/4” |
| R | Neptune T-10 1” |
| S | Neptune T-10 1 1/2” |
| T | Zenner Model PMN 5/8” x 3/4” |

# Special Notices

The USC Foundation publishes Special Notices from time to time. These notices contain information that requires special attention. The Foundation makes Special Notices, in their first year of publication, an exclusive benefit for Foundation members. Members receive all Special Notices via mail immediately upon release. Please visit fccchr.usc.edu/list to view the Special Notices archive.

**Notice 96-001**
This notice lists Ames assemblies which have been reported with low check valve readings. Corrections to the problem are discussed.

**Notice 97-001**
This notice discusses changes in the retaining cup in the relief valve stem of the 8" and 10" Wilkins 975 reduced pressure principle assemblies.

**Notice 97-002**
This notice identifies Ames 2000SS, 3000SS, and 4000SS series assemblies that were discovered to have unapproved components.

**Notice 97-003**
This notice lists assemblies which were NOT Approved by the Foundation, although advertisements may have implied otherwise.

**Notice 98-001**
This notice advises members of certain action in the Federal Register regarding cross-connection control programs.

**Notice 98-002**
This notice advises members of Wilkins 950 series and 975 series modifications.

**Notice 99-001**
This notice lists assemblies which were NOT Approved by the Foundation, although advertisements may have implied otherwise.

**Notice 99-002**
This notice lists assemblies which were NOT Approved by the Foundation, although advertisements may have implied otherwise.

**Notice 99-003**
This notice lists assemblies which were NOT Approved by the Foundation, although advertisements may have implied otherwise.

**Notice 01-001**
This notice discuss silicon parts in certain Febco relief valves.

**Notice 01-002/Revised Notice 01-002-R1**
This notice discusses some check valves not approved in certain Ames and Watts assemblies.

**Notice 01-003**
This notice lists assemblies which were NOT Approved by the Foundation, although advertisements may have implied otherwise.

**Notice 02-001**
This notice explains there are some specific Febco assemblies with unapproved check valve retainers.

**Notice 03-001**
This notice explains there are improper markings of model designations on some Wilkins assemblies.

**Notice 03-002**
This notice explains the possibility of the interference of the check valves on some Ames and Watts assemblies.

**Notice 04-001**
This notice identifies some Febco 825YA assemblies sold with a dimensional variation.

**Notice 05-001**
This notice identifies some Ames and Watts assemblies sold with unapproved disc material.

**Notice 06-001**
This notice identifies unapproved guides found in certain Febco assemblies.

**Notice 06-002**
This notice identifies a change in the design of the Flomatic PVBs.

**Notice 06-003**
This notice lists assemblies which were NOT Approved by the Foundation, although advertisements may have implied otherwise.

**Notice 07-001**
This notice discusses out of tolerance springs on Conbraco assemblies.

**Notice 09-001**
This notice highlights unapproved third party components that are being distributed.

**Notice 13-001**
This notice discusses modifications to guiding surfaces of the check valves on Wilkins assemblies.

**Notice 14-001**
This notice lists assemblies which were NOT Approved by the Foundation, although advertisements may have implied otherwise.

**Notice 14-002**
This notice clarifies the method in which the model designation is indicated on the Wilkins 3/4" 950XLD and 975XLD assemblies.

**Notice 15-001**
This notice has been prepared to review Special Notice 14-002 and clarify the USC Approval Status of Wilkins Reduced Pressure Principle Detector Assemblies (RPDAs).


2018 © University of Southern California

**Type:** AVB
**Size:** 3/4
**Manual:** 8
**Approved:** 01-Nov-1991
**Manufacturer:** Ames
**Orientation:** VUH
**0.25% Pb:** No
**Renewed:** 01-Nov-2015
**Model:** A100
**Meters:**
**Spare Parts Only:** Yes
**Bypass:**

---

**Type:** AVB
**Size:** 1
**Manual:** 8
**Approved:** 01-Nov-1991
**Manufacturer:** Ames
**Orientation:** VUH
**0.25% Pb:** No
**Renewed:** 01-Nov-2015
**Model:** A100
**Meters:**
**Spare Parts Only:** Yes
**Bypass:**

---

**Type:** AVB
**Size:** 1 1/2
**Manual:** 8
**Approved:** 27-Sep-1991
**Manufacturer:** Ames
**Orientation:** VUH
**0.25% Pb:** No
**Renewed:** 27-Sep-2018
**Model:** A100
**Meters:**
**Spare Parts Only:** Yes
**Bypass:**

---

**Type:** AVB
**Size:** 2
**Manual:** 8
**Approved:** 21-Aug-1991
**Manufacturer:** Ames
**Orientation:** VUH
**0.25% Pb:** No
**Renewed:** 21-Aug-2018
**Model:** A100
**Meters:**
**Spare Parts Only:** Yes
**Bypass:**

---

**Type:** AVB
**Size:** 1 1/4
**Manual:** 8
**Approved:** 12-Aug-1991
**Manufacturer:** Watts
**Orientation:** VUH
**0.25% Pb:** No
**Renewed:** 12-Aug-2018
**Model:** 288AM3
**Meters:**
**Spare Parts Only:** Yes
**Bypass:**

---

**Type:** AVB
**Size:** 1 1/2
**Manual:** 8
**Approved:** 27-Sep-1991
**Manufacturer:** Watts
**Orientation:** VUH
**0.25% Pb:** No
**Renewed:** 27-Sep-2018
**Model:** 288AM3
**Meters:**
**Spare Parts Only:** Yes
**Bypass:**

---

**Type:** AVB
**Size:** 2
**Manual:** 8
**Approved:** 21-Aug-1991
**Manufacturer:** Watts
**Orientation:** VUH
**0.25% Pb:** No
**Renewed:** 21-Aug-2018
**Model:** 288AM3
**Meters:**
**Spare Parts Only:** Yes
**Bypass:**

---

**Type:** AVB
**Size:** 2 1/2
**Manual:** 8
**Approved:** 10-Sep-1991
**Manufacturer:** Watts
**Orientation:** VUH
**0.25% Pb:** No
**Renewed:** 10-Sep-2018
**Model:** 288AM3
**Meters:**
**Spare Parts Only:** Yes
**Bypass:**

**Type:** AVB
**Manufacturer:** Watts
**Model:** 288AM3
**Size:** 3
**Orientation:** VUH
**Meters:**
**Manual:** 8
**0.25% Pb:** No
**Spare Parts Only:** Yes
**Approved:** 16-Sep-1991
**Renewed:** 16-Sep-2018
**Bypass:**

---

**Type:** AVB
**Manufacturer:** Watts
**Model:** 288AM5
**Size:** 3/4
**Orientation:** VUH
**Meters:**
**Manual:** 8
**0.25% Pb:** No
**Spare Parts Only:** Yes
**Approved:** 01-Nov-1991
**Renewed:** 01-Nov-2015
**Bypass:**

---

**Type:** AVB
**Manufacturer:** Watts
**Model:** 288AM5
**Size:** 1
**Orientation:** VUH
**Meters:**
**Manual:** 8
**0.25% Pb:** No
**Spare Parts Only:** Yes
**Approved:** 01-Nov-1991
**Renewed:** 01-Nov-2015
**Bypass:**

---

**Type:** DC
**Manufacturer:** Ames
**Model:** 2000-DC
**Size:** 10
**Orientation:** H
**Meters:**
**Manual:** 7
**0.25% Pb:** No
**Spare Parts Only:** Yes
**Approved:** 04-Aug-1987
**Renewed:** 02-Aug-2017
**Bypass:**
**Shutoffs:** tt,ee,ff,gg,hh,ll,mm,oo,pp,uu,ccc,ddd,ffff,gggg
**Notes:** formerly Model DC

---

**Type:** DC
**Manufacturer:** Ames
**Model:** 2000-DCA
**Size:** 4
**Orientation:** H
**Meters:**
**Manual:** 7
**0.25% Pb:** No
**Spare Parts Only:** Yes
**Approved:** 11-Jan-1988
**Renewed:** 11-Jan-2018
**Bypass:**
**Shutoffs:** tt,ee,ff,gg,hh,ll,mm,oo,pp,uu,ccc,ddd,ffff,gggg
**Notes:** formerly Model DCA

---

**Type:** DC
**Manufacturer:** Ames
**Model:** 2000-DCA
**Size:** 6
**Orientation:** H
**Meters:**
**Manual:** 7
**0.25% Pb:** No
**Spare Parts Only:** Yes
**Approved:** 11-Jan-1988
**Renewed:** 11-Jan-2018
**Bypass:**
**Shutoffs:** tt,ee,ff,gg,hh,ll,mm,oo,pp,uu,ccc,ddd,ffff,gggg
**Notes:** formerly Model DCA


2018 © University of Southern California

**Type:** DC **Manufacturer:** Ames **Model:** 2000-DCA
**Size:** 8 **Orientation:** H **Meters:**
**Manual:** 7 **0.25% Pb:** No **Spare Parts Only:** Yes
**Approved:** 11-Jan-1988 **Renewed:** 11-Jan-2018 **Bypass:**
**Shutoffs:** tt,ee,ff,gg,hh,ll,mm,oo,pp,uu,ccc,ddd,ffff,gggg
**Notes:** formerly Model DCA

---

**Type:** DC **Manufacturer:** Ames **Model:** 2000-G-DC
**Size:** 10 **Orientation:** H **Meters:**
**Manual:** 7 **0.25% Pb:** No **Spare Parts Only:** Yes
**Approved:** 04-Aug-1987 **Renewed:** 04-Aug-2017 **Bypass:**
**Shutoffs:** tt,ee,ff,gg,hh,ll,mm,oo,pp,uu,ccc,ddd,ffff,gggg
**Notes:** formerly Model DC

---

**Type:** DC **Manufacturer:** Ames **Model:** 2000-G-DCA
**Size:** 4 **Orientation:** H **Meters:**
**Manual:** 7 **0.25% Pb:** No **Spare Parts Only:** Yes
**Approved:** 11-Jan-1988 **Renewed:** 11-Jan-2018 **Bypass:**
**Shutoffs:** tt,ee,ff,gg,hh,ll,mm,oo,pp,uu,ccc,ddd,ffff,gggg
**Notes:** formerly Model DCA

---

**Type:** DC **Manufacturer:** Ames **Model:** 2000-G-DCA
**Size:** 6 **Orientation:** H **Meters:**
**Manual:** 7 **0.25% Pb:** No **Spare Parts Only:** Yes
**Approved:** 11-Jan-1988 **Renewed:** 11-Jan-2018 **Bypass:**
**Shutoffs:** tt,ee,ff,gg,hh,ll,mm,oo,pp,uu,ccc,ddd,ffff,gggg
**Notes:** formerly Model DCA

---

**Type:** DC **Manufacturer:** Ames **Model:** 2000-G-DCA
**Size:** 8 **Orientation:** H **Meters:**
**Manual:** 7 **0.25% Pb:** No **Spare Parts Only:** Yes
**Approved:** 11-Jan-1988 **Renewed:** 11-Jan-2018 **Bypass:**
**Shutoffs:** tt,ee,ff,gg,hh,ll,mm,oo,pp,uu,ccc,ddd,ffff,gggg
**Notes:** formerly Model DCA

---

**Type:** DC **Manufacturer:** Ames **Model:** 2000B
**Size:** 1/2 **Orientation:** H **Meters:**
**Manual:** 8 **0.25% Pb:** No **Spare Parts Only:** No
**Approved:** 06-Dec-1983 **Renewed:** 06-Dec-2016 **Bypass:**
**Shutoffs:** (vv),xx,ooo,hhhh,pppp,rrrrr
**Notes:** Upgraded to 9th Ed.

**Type:** DC
**Size:** 1/2
**Manual:** 9
**Approved:** 16-Jun-1997
**Shutoffs:** (vv),xx,ooo,hhhh,pppp,rrrrr
**Notes:** Previous 8th Ed. Approval

**Manufacturer:** Ames
**Orientation:** H
**0.25% Pb:** No
**Renewed:** 16-Jun-2018

**Model:** 2000B
**Meters:**
**Spare Parts Only:** No
**Bypass:**

---

**Type:** DC
**Size:** 1/2
**Manual:** 9
**Approved:** 16-Jun-1997
**Shutoffs:** (vv),xx,ooo,hhhh,pppp,rrrrr

**Manufacturer:** Ames
**Orientation:** VU
**0.25% Pb:** No
**Renewed:** 16-Jun-2018

**Model:** 2000B
**Meters:**
**Spare Parts Only:** No
**Bypass:**

---

**Type:** DC
**Size:** 3/4
**Manual:** 8
**Approved:** 05-Apr-1993
**Shutoffs:** (vv),xx,ooo,hhhh,pppp,rrrrr

**Manufacturer:** Ames
**Orientation:** H
**0.25% Pb:** No
**Renewed:** 05-Apr-2017

**Model:** 2000B
**Meters:**
**Spare Parts Only:** No
**Bypass:**

---

**Type:** DC
**Size:** 3/4
**Manual:** 8
**Approved:** 27-Aug-1996
**Shutoffs:** (vv),xx,ooo,hhhh,pppp,rrrrr

**Manufacturer:** Ames
**Orientation:** VU
**0.25% Pb:** No
**Renewed:** 27-Aug-2017

**Model:** 2000B
**Meters:**
**Spare Parts Only:** No
**Bypass:**

---

**Type:** DC
**Size:** 1
**Manual:** 8
**Approved:** 26-Feb-1991
**Shutoffs:** (vv),xx,ooo,hhhh,pppp,rrrrr
**Notes:** Upgraded to 9th Ed.

**Manufacturer:** Ames
**Orientation:** H
**0.25% Pb:** No
**Renewed:** 26-Feb-2018

**Model:** 2000B
**Meters:**
**Spare Parts Only:** No
**Bypass:**

---

**Type:** DC
**Size:** 1
**Manual:** 9
**Approved:** 18-May-1998
**Shutoffs:** (vv),xx,ooo,hhhh,pppp,rrrrr
**Notes:** Previous 8th Ed. Approval

**Manufacturer:** Ames
**Orientation:** H
**0.25% Pb:** No
**Renewed:** 18-May-2016

**Model:** 2000B
**Meters:**
**Spare Parts Only:** No
**Bypass:**


2018 © University of Southern California

**Type:** DC
**Size:** 1
**Manual:** 9
**Approved:** 18-May-1998
**Shutoffs:** (vv),xx,ooo,hhhh,pppp,rrrrr
**Manufacturer:** Ames
**Orientation:** VU
**0.25% Pb:** No
**Renewed:** 18-May-2016
**Model:** 2000B
**Meters:**
**Spare Parts Only:** No
**Bypass:**

---

**Type:** DC
**Size:** 1 1/4
**Manual:** 8
**Approved:** 01-Oct-1996
**Shutoffs:** (vv),xx,ooo,hhhh,pppp,rrrrr
**Manufacturer:** Ames
**Orientation:** H
**0.25% Pb:** No
**Renewed:** 01-Oct-2017
**Model:** 2000B
**Meters:**
**Spare Parts Only:** No
**Bypass:**

---

**Type:** DC
**Size:** 1 1/4
**Manual:** 8
**Approved:** 01-Oct-1996
**Shutoffs:** (vv),xx,ooo,hhhh,pppp,rrrrr
**Manufacturer:** Ames
**Orientation:** VU
**0.25% Pb:** No
**Renewed:** 01-Oct-2017
**Model:** 2000B
**Meters:**
**Spare Parts Only:** No
**Bypass:**

---

**Type:** DC
**Size:** 1 1/2
**Manual:** 8
**Approved:** 24-May-1994
**Shutoffs:** (vv),xx,ooo,hhhh,pppp,rrrrr
**Manufacturer:** Ames
**Orientation:** H
**0.25% Pb:** No
**Renewed:** 24-May-2018
**Model:** 2000B
**Meters:**
**Spare Parts Only:** No
**Bypass:**

---

**Type:** DC
**Size:** 1 1/2
**Manual:** 8
**Approved:** 11-Mar-1996
**Shutoffs:** (vv),xx,ooo,hhhh,pppp,rrrrr
**Manufacturer:** Ames
**Orientation:** VU
**0.25% Pb:** No
**Renewed:** 08-Mar-2017
**Model:** 2000B
**Meters:**
**Spare Parts Only:** No
**Bypass:**

---

**Type:** DC
**Size:** 2
**Manual:** 8
**Approved:** 30-Jun-1992
**Shutoffs:** (vv),xx,ooo,hhhh,pppp,rrrrr
**Manufacturer:** Ames
**Orientation:** H
**0.25% Pb:** No
**Renewed:** 30-Jun-2016
**Model:** 2000B
**Meters:**
**Spare Parts Only:** No
**Bypass:**

---

**Type:** DC
**Size:** 2
**Manual:** 8
**Approved:** 08-Mar-1996
**Shutoffs:** (vv),xx,ooo,hhhh,pppp,rrrrr
**Manufacturer:** Ames
**Orientation:** VU
**0.25% Pb:** No
**Renewed:** 08-Mar-2017
**Model:** 2000B
**Meters:**
**Spare Parts Only:** No
**Bypass:**

**Type:** DC
**Manufacturer:** Ames
**Model:** 2000B-FP
**Size:** 3/4
**Orientation:** H
**Meters:**
**Manual:** 9
**0.25% Pb:** No
**Spare Parts Only:** No
**Approved:** 01-Sep-2009
**Renewed:** 01-Sep-2018
**Bypass:**
**Shutoffs:** (eeeee)

---

**Type:** DC
**Manufacturer:** Ames
**Model:** 2000B-FP
**Size:** 1
**Orientation:**
**Meters:**
**Manual:**
**0.25% Pb:** No
**Spare Parts Only:** No
**Approved:**
**Renewed:**
**Bypass:**
**Notes:** Model Designation changed to 2000BM1-FP

---

**Type:** DC
**Manufacturer:** Ames
**Model:** 2000B-FP
**Size:** 1 1/4
**Orientation:**
**Meters:**
**Manual:**
**0.25% Pb:** No
**Spare Parts Only:** No
**Approved:**
**Renewed:**
**Bypass:**
**Notes:** Model Designation changed to 2000BM2-FP

---

**Type:** DC
**Manufacturer:** Ames
**Model:** 2000B-FP
**Size:** 1 1/2
**Orientation:**
**Meters:**
**Manual:**
**0.25% Pb:** No
**Spare Parts Only:** No
**Approved:**
**Renewed:**
**Bypass:**
**Notes:** Model Designation changed to 2000BM2-FP

---

**Type:** DC
**Manufacturer:** Ames
**Model:** 2000B-FP
**Size:** 2
**Orientation:**
**Meters:**
**Manual:**
**0.25% Pb:** No
**Spare Parts Only:** No
**Approved:**
**Renewed:**
**Bypass:**
**Notes:** Model Designation changed to 2000BM1-FP

---

**Type:** DC
**Manufacturer:** Ames
**Model:** 2000BM1-FP
**Size:** 1
**Orientation:** H
**Meters:**
**Manual:** 9
**0.25% Pb:** No
**Spare Parts Only:** No
**Approved:** 01-Sep-2009
**Renewed:** 01-Sep-2018
**Bypass:**
**Shutoffs:** (eeeee),uuuuuu
**Notes:** formerly Model 2000B-FP. Model Change effective beginning with serial #: 028561


2018 © University of Southern California

**Type:** DC
**Manufacturer:** Ames
**Model:** 2000BM1-FP
**Size:** 1
**Orientation:** VU
**Meters:**
**Manual:** 9
**0.25% Pb:** No
**Spare Parts Only:** No
**Approved:** 21-Aug-2017
**Renewed:**
**Bypass:**
**Shutoffs:** (eeeee),uuuuuu

---

**Type:** DC
**Manufacturer:** Ames
**Model:** 2000BM1-FP
**Size:** 2
**Orientation:** H
**Meters:**
**Manual:** 9
**0.25% Pb:** No
**Spare Parts Only:** No
**Approved:** 01-Sep-2009
**Renewed:** 01-Sep-2018
**Bypass:**
**Shutoffs:** (eeeee),uuuuuu
**Notes:** formerly Model 2000B-FP. Model Change effective beginning with serial #: 039123

---

**Type:** DC
**Manufacturer:** Ames
**Model:** 2000BM1-FP
**Size:** 2
**Orientation:** VU
**Meters:**
**Manual:** 9
**0.25% Pb:** No
**Spare Parts Only:** No
**Approved:** 21-Aug-2017
**Renewed:**
**Bypass:**
**Shutoffs:** (eeeee),uuuuuu

---

**Type:** DC
**Manufacturer:** Ames
**Model:** 2000BM2-FP
**Size:** 1 1/4
**Orientation:** H
**Meters:**
**Manual:** 9
**0.25% Pb:** No
**Spare Parts Only:** No
**Approved:** 01-Sep-2009
**Renewed:** 01-Sep-2018
**Bypass:**
**Shutoffs:** (eeeee),uuuuuu
**Notes:** formerly Model 2000B-FP. Model Change effective beginning with serial #: 017727

---

**Type:** DC
**Manufacturer:** Ames
**Model:** 2000BM2-FP
**Size:** 1 1/4
**Orientation:** VU
**Meters:**
**Manual:** 9
**0.25% Pb:** No
**Spare Parts Only:** No
**Approved:** 21-Aug-2017
**Renewed:**
**Bypass:**
**Shutoffs:** (eeeee),uuuuuu

---

**Type:** DC
**Manufacturer:** Ames
**Model:** 2000BM2-FP
**Size:** 1 1/2
**Orientation:** H
**Meters:**
**Manual:** 9
**0.25% Pb:** No
**Spare Parts Only:** No
**Approved:** 01-Sep-2009
**Renewed:** 01-Sep-2018
**Bypass:**
**Shutoffs:** (eeeee),uuuuuu
**Notes:** formerly Model 2000B-FP. Model Change effective beginning with serial #: 034639

**Type:** DC
**Size:** 1 1/2
**Manual:** 9
**Approved:** 21-Aug-2017
**Shutoffs:** (eeeee),uuuuuu

**Manufacturer:** Ames
**Orientation:** VU
**0.25% Pb:** No
**Renewed:**

**Model:** 2000BM2-FP
**Meters:**
**Spare Parts Only:** No
**Bypass:**

---

**Type:** DC
**Size:** 3/4
**Manual:** 9
**Approved:** 27-Mar-2000
**Shutoffs:** (vv),xx,ooo,hhhh,pppp,rrrrr

**Manufacturer:** Ames
**Orientation:** H
**0.25% Pb:** No
**Renewed:** 27-Mar-2018

**Model:** 2000BM3
**Meters:**
**Spare Parts Only:** No
**Bypass:**

---

**Type:** DC
**Size:** 3/4
**Manual:** 9
**Approved:** 27-Mar-2000
**Shutoffs:** (vv),xx,ooo,hhhh,pppp,rrrrr

**Manufacturer:** Ames
**Orientation:** VU
**0.25% Pb:** No
**Renewed:** 27-Mar-2018

**Model:** 2000BM3
**Meters:**
**Spare Parts Only:** No
**Bypass:**

---

**Type:** DC
**Size:** 3/4
**Manual:** 9
**Approved:** 01-Sep-2009
**Shutoffs:** (eeeee)

**Manufacturer:** Ames
**Orientation:** H
**0.25% Pb:** No
**Renewed:** 01-Sep-2018

**Model:** 2000BM3-FP
**Meters:**
**Spare Parts Only:** No
**Bypass:**

---

**Type:** DC
**Size:** 4
**Manual:** 6
**Approved:** 15-Jan-1982
**Shutoffs:** (oo),gg,hh,ll,mm,pp,tt,uu,eee

**Manufacturer:** Ames
**Orientation:** H
**0.25% Pb:** No
**Renewed:** 15-Jan-2018

**Model:** 2000CIV
**Meters:**
**Spare Parts Only:** Yes
**Bypass:**

---

**Type:** DC
**Size:** 4
**Manual:** 8
**Approved:** 11-Mar-1996
**Shutoffs:** (oo),gg,hh,ll,mm,pp,tt,uu,eee

**Manufacturer:** Ames
**Orientation:** VU
**0.25% Pb:** No
**Renewed:** 08-Mar-2017

**Model:** 2000CIV
**Meters:**
**Spare Parts Only:** Yes
**Bypass:**

---

**Type:** DC
**Size:** 6
**Manual:** 6
**Approved:** 18-May-1982
**Shutoffs:** (oo),gg,hh,ll,mm,pp,tt,uu,eee

**Manufacturer:** Ames
**Orientation:** H
**0.25% Pb:** No
**Renewed:** 18-May-2018

**Model:** 2000CIV
**Meters:**
**Spare Parts Only:** Yes
**Bypass:**


2018 © University of Southern California

**Type:** DC
**Manufacturer:** Ames
**Model:** 2000CIV
**Size:** 6
**Orientation:** VU
**Meters:**
**Manual:** 8
**0.25% Pb:** No
**Spare Parts Only:** Yes
**Approved:** 05-Dec-1996
**Renewed:** 05-Dec-2017
**Bypass:**
**Shutoffs:** (oo),gg,hh,ll,mm,pp,tt,uu,eee

---

**Type:** DC
**Manufacturer:** Ames
**Model:** 2000CIV
**Size:** 8
**Orientation:** H
**Meters:**
**Manual:** 6
**0.25% Pb:** No
**Spare Parts Only:** Yes
**Approved:** 06-Jul-1981
**Renewed:** 06-Jul-2017
**Bypass:**
**Shutoffs:** (oo),gg,hh,ll,mm,pp,tt,uu,eee

---

**Type:** DC
**Manufacturer:** Ames
**Model:** 2000CIV
**Size:** 8
**Orientation:** VU
**Meters:**
**Manual:** 8
**0.25% Pb:** No
**Spare Parts Only:** Yes
**Approved:** 05-Dec-1996
**Renewed:** 05-Dec-2017
**Bypass:**
**Shutoffs:** (oo),gg,hh,ll,mm,pp,tt,uu,eee

---

**Type:** DC
**Manufacturer:** Ames
**Model:** 2000CIV
**Size:** 10
**Orientation:** H
**Meters:**
**Manual:** 6
**0.25% Pb:** No
**Spare Parts Only:** Yes
**Approved:** 16-Mar-1983
**Renewed:** 16-Mar-2016
**Bypass:**
**Shutoffs:** (oo),gg,hh,ll,mm,pp,tt,uu,eee

---

**Type:** DC
**Manufacturer:** Ames
**Model:** 2000CIV
**Size:** 10
**Orientation:** VU
**Meters:**
**Manual:** 8
**0.25% Pb:** No
**Spare Parts Only:** Yes
**Approved:** 05-Dec-1996
**Renewed:** 05-Dec-2017
**Bypass:**
**Shutoffs:** (oo),gg,hh,ll,mm,pp,tt,uu,eee

---

**Type:** DC
**Manufacturer:** Ames
**Model:** 2000SE
**Size:** 2 1/2
**Orientation:** H
**Meters:**
**Manual:** 8
**0.25% Pb:** No
**Spare Parts Only:** Yes
**Approved:** 10-Sep-1996
**Renewed:** 10-Sep-2017
**Bypass:**
**Shutoffs:** (mm),ee,ff,gg,hh,ll,mm,oo,pp,tt,uu,ccc,ddd,ffff,gggg

---

**Type:** DC
**Manufacturer:** Ames
**Model:** 2000SE
**Size:** 6
**Orientation:** H
**Meters:**
**Manual:** 8
**0.25% Pb:** No
**Spare Parts Only:** Yes
**Approved:** 22-Nov-1993
**Renewed:** 22-Nov-2017
**Bypass:**
**Shutoffs:** tt,ee,ff,gg,hh,ll,mm,oo,pp,uu,ccc,ddd,ffff,gggg

**Type:** DC
**Manufacturer:** Ames
**Model:** 2000SE
**Size:** 8
**Orientation:** H
**Meters:**
**Manual:** 8
**0.25% Pb:** No
**Spare Parts Only:** Yes
**Approved:** 09-Sep-1992
**Renewed:** 09-Sep-2016
**Bypass:**
**Shutoffs:** tt,ee,ff,gg,hh,ll,mm,oo,pp,uu,ccc,ddd,ffff,gggg

---

**Type:** DC
**Manufacturer:** Ames
**Model:** 2000SS
**Size:** 3/4
**Orientation:** H
**Meters:**
**Manual:** 8
**0.25% Pb:** No
**Spare Parts Only:** Yes
**Approved:** 05-May-1995
**Renewed:** 05-May-2016
**Bypass:**
**Shutoffs:** ii

---

**Type:** DC
**Manufacturer:** Ames
**Model:** 2000SS
**Size:** 1
**Orientation:** H
**Meters:**
**Manual:** 8
**0.25% Pb:** No
**Spare Parts Only:** Yes
**Approved:** 05-May-1995
**Renewed:** 05-May-2016
**Bypass:**
**Shutoffs:** ii

---

**Type:** DC
**Manufacturer:** Ames
**Model:** 2000SS
**Size:** 1 1/4
**Orientation:** H
**Meters:**
**Manual:** 8
**0.25% Pb:** No
**Spare Parts Only:** Yes
**Approved:** 14-Jul-1995
**Renewed:** 14-Jul-2016
**Bypass:**
**Shutoffs:** ii

---

**Type:** DC
**Manufacturer:** Ames
**Model:** 2000SS
**Size:** 1 1/2
**Orientation:** H
**Meters:**
**Manual:** 8
**0.25% Pb:** No
**Spare Parts Only:** Yes
**Approved:** 13-Oct-1995
**Renewed:** 13-Oct-2016
**Bypass:**
**Shutoffs:** ii

---

**Type:** DC
**Manufacturer:** Ames
**Model:** 2000SS
**Size:** 2
**Orientation:** H
**Meters:**
**Manual:** 8
**0.25% Pb:** No
**Spare Parts Only:** Yes
**Approved:** 13-Oct-1995
**Renewed:** 13-Oct-2016
**Bypass:**
**Shutoffs:** ii

---

**Type:** DC
**Manufacturer:** Ames
**Model:** 2000SS
**Size:** 2 1/2
**Orientation:** H
**Meters:**
**Manual:** 8
**0.25% Pb:** No
**Spare Parts Only:** No
**Approved:** 11-Jul-1991
**Renewed:** 11-Jul-2018
**Bypass:**
**Shutoffs:** (tt),ee,ff,gg,hh,pp,uu,ccc,ddd


2018 © University of Southern California

**Type:** DC
**Manufacturer:** Ames
**Model:** 2000SS
**Size:** 2 1/2
**Orientation:** H
**Meters:**
**Manual:** 8
**0.25% Pb:** Yes
**Spare Parts Only:** No
**Approved:** 11-Jul-1991
**Renewed:** 11-Jul-2018
**Bypass:**
**Shutoffs:** ll,mm,oo,ffff,gggg

---

**Type:** DC
**Manufacturer:** Ames
**Model:** 2000SS
**Size:** 3
**Orientation:** H
**Meters:**
**Manual:** 8
**0.25% Pb:** No
**Spare Parts Only:** No
**Approved:** 11-Jul-1991
**Renewed:** 11-Jul-2018
**Bypass:**
**Shutoffs:** (tt),ee,ff,gg,hh,pp,uu,ccc,ddd

---

**Type:** DC
**Manufacturer:** Ames
**Model:** 2000SS
**Size:** 3
**Orientation:** H
**Meters:**
**Manual:** 8
**0.25% Pb:** Yes
**Spare Parts Only:** No
**Approved:** 11-Jul-1991
**Renewed:** 11-Jul-2018
**Bypass:**
**Shutoffs:** ll,mm,oo,ffff,gggg

---

**Type:** DC
**Manufacturer:** Ames
**Model:** 2000SS
**Size:** 4
**Orientation:** H
**Meters:**
**Manual:** 8
**0.25% Pb:** No
**Spare Parts Only:** No
**Approved:** 11-Jul-1991
**Renewed:** 11-Jul-2018
**Bypass:**
**Shutoffs:** (tt),ee,ff,gg,hh,pp,uu,ccc,ddd

---

**Type:** DC
**Manufacturer:** Ames
**Model:** 2000SS
**Size:** 4
**Orientation:** H
**Meters:**
**Manual:** 8
**0.25% Pb:** Yes
**Spare Parts Only:** No
**Approved:** 11-Jul-1991
**Renewed:** 11-Jul-2018
**Bypass:**
**Shutoffs:** ll,mm,oo,ffff,gggg

---

**Type:** DC
**Manufacturer:** Ames
**Model:** 2000SS
**Size:** 6
**Orientation:** H
**Meters:**
**Manual:** 8
**0.25% Pb:** No
**Spare Parts Only:** No
**Approved:** 09-Sep-1992
**Renewed:** 09-Sep-2016
**Bypass:**
**Shutoffs:** (tt),ee,ff,gg,hh,pp,uu,ccc,ddd

---

**Type:** DC
**Manufacturer:** Ames
**Model:** 2000SS
**Size:** 6
**Orientation:** H
**Meters:**
**Manual:** 8
**0.25% Pb:** Yes
**Spare Parts Only:** No
**Approved:** 09-Sep-1992
**Renewed:** 09-Sep-2016
**Bypass:**
**Shutoffs:** ll,mm,oo,ffff,gggg

**Type:** DC
**Size:** 8
**Manual:** 8
**Approved:** 16-Sep-1996
**Shutoffs:** (tt),ee,ff,gg,hh,pp,uu,ccc,ddd
**Manufacturer:** Ames
**Orientation:** H
**0.25% Pb:** No
**Renewed:** 16-Sep-2017
**Model:** 2000SS
**Meters:**
**Spare Parts Only:** No
**Bypass:**

---

**Type:** DC
**Size:** 8
**Manual:** 8
**Approved:** 16-Sep-1996
**Shutoffs:** ll,mm,oo,ffff,gggg
**Manufacturer:** Ames
**Orientation:** H
**0.25% Pb:** Yes
**Renewed:** 16-Sep-2017
**Model:** 2000SS
**Meters:**
**Spare Parts Only:** No
**Bypass:**

---

**Type:** DC
**Size:** 10
**Manual:** 8
**Approved:** 16-Feb-2001
**Shutoffs:** pp,
**Manufacturer:** Ames
**Orientation:** H
**0.25% Pb:** No
**Renewed:** 16-Feb-2016
**Model:** 2000SS
**Meters:**
**Spare Parts Only:** No
**Bypass:**

---

**Type:** DC
**Size:** 10
**Manual:** 8
**Approved:** 16-Feb-2001
**Shutoffs:** (ll),mm,oo
**Manufacturer:** Ames
**Orientation:** H
**0.25% Pb:** Yes
**Renewed:** 16-Feb-2016
**Model:** 2000SS
**Meters:**
**Spare Parts Only:** No
**Bypass:**

---

**Type:** DC
**Size:** 12
**Manual:** 9
**Approved:** 22-Jul-2009
**Shutoffs:** pp,
**Manufacturer:** Ames
**Orientation:** H
**0.25% Pb:** No
**Renewed:** 22-Jul-2018
**Model:** 2000SS
**Meters:**
**Spare Parts Only:** No
**Bypass:**

---

**Type:** DC
**Size:** 12
**Manual:** 9
**Approved:** 22-Jul-2009
**Shutoffs:** (ll),mm,oo
**Manufacturer:** Ames
**Orientation:** H
**0.25% Pb:** Yes
**Renewed:** 22-Jul-2018
**Model:** 2000SS
**Meters:**
**Spare Parts Only:** No
**Bypass:**

---

**Type:** DC
**Size:** 12
**Manual:** 9
**Approved:** 22-Feb-2011
**Shutoffs:** pp,
**Manufacturer:** Ames
**Orientation:** VU
**0.25% Pb:** No
**Renewed:** 22-Feb-2017
**Model:** 2000SS
**Meters:**
**Spare Parts Only:** No
**Bypass:**


2018 © University of Southern California

**Type:** DC
**Manufacturer:** Ames
**Model:** 2000SS
**Size:** 12
**Orientation:** VU
**Meters:**
**Manual:** 9
**0.25% Pb:** Yes
**Spare Parts Only:** No
**Approved:** 22-Feb-2011
**Renewed:** 22-Feb-2017
**Bypass:**
**Shutoffs:** (ll),mm,oo

---

**Type:** DC
**Manufacturer:** Ames
**Model:** 2000SS-M
**Size:** 4
**Orientation:** H
**Meters:**
**Manual:** 8
**0.25% Pb:** No
**Spare Parts Only:** No
**Approved:** 05-May-1995
**Renewed:** 05-May-2016
**Bypass:**
**Shutoffs:** (tt),ee,ff,gg,hh,ll,mm,oo,pp,uu,ccc,ddd,ffff,gggg

---

**Type:** DC
**Manufacturer:** Ames
**Model:** 2000SS-M
**Size:** 6
**Orientation:** H
**Meters:**
**Manual:** 8
**0.25% Pb:** No
**Spare Parts Only:** No
**Approved:** 05-May-1995
**Renewed:** 05-May-2016
**Bypass:**
**Shutoffs:** (tt),ee,ff,gg,hh,ll,mm,oo,pp,uu,ccc,ddd,ffff,gggg

---

**Type:** DC
**Manufacturer:** Ames
**Model:** 200B
**Size:** 1/2
**Orientation:** H
**Meters:**
**Manual:** 9
**0.25% Pb:** No
**Spare Parts Only:** Yes
**Approved:** 21-Apr-2006
**Renewed:** 21-Apr-2018
**Bypass:**
**Shutoffs:** (vv),xx,ooo,hhhh,pppp,rrrrr

---

**Type:** DC
**Manufacturer:** Ames
**Model:** 200B
**Size:** 1/2
**Orientation:** VD
**Meters:**
**Manual:** 9
**0.25% Pb:** No
**Spare Parts Only:** Yes
**Approved:** 21-Apr-2006
**Renewed:** 21-Apr-2018
**Bypass:**
**Shutoffs:** (vv),xx,ooo,hhhh,pppp,rrrrr

---

**Type:** DC
**Manufacturer:** Ames
**Model:** 200B
**Size:** 1/2
**Orientation:** VU
**Meters:**
**Manual:** 9
**0.25% Pb:** No
**Spare Parts Only:** Yes
**Approved:** 21-Apr-2006
**Renewed:** 21-Apr-2018
**Bypass:**
**Shutoffs:** (vv),xx,ooo,hhhh,pppp,rrrrr

---

**Type:** DC
**Manufacturer:** Ames
**Model:** 200B
**Size:** 3/4
**Orientation:** H
**Meters:**
**Manual:** 9
**0.25% Pb:** No
**Spare Parts Only:** Yes
**Approved:** 21-Apr-2006
**Renewed:** 21-Apr-2018
**Bypass:**
**Shutoffs:** (vv),xx,ooo,hhhh,pppp,rrrrr

**Type:** DC
**Size:** 3/4
**Manual:** 9
**Approved:** 21-Apr-2006
**Shutoffs:** (vv),xx,ooo,hhhh,pppp,rrrrr
**Manufacturer:** Ames
**Orientation:** VD
**0.25% Pb:** No
**Renewed:** 21-Apr-2018
**Model:** 200B
**Meters:**
**Spare Parts Only:** Yes
**Bypass:**

---

**Type:** DC
**Size:** 3/4
**Manual:** 9
**Approved:** 21-Apr-2006
**Shutoffs:** (vv),xx,ooo,hhhh,pppp,rrrrr
**Manufacturer:** Ames
**Orientation:** VU
**0.25% Pb:** No
**Renewed:** 21-Apr-2018
**Model:** 200B
**Meters:**
**Spare Parts Only:** Yes
**Bypass:**

---

**Type:** DC
**Size:** 1
**Manual:** 9
**Approved:** 21-Apr-2006
**Shutoffs:** (vv),xx,ooo,hhhh,pppp,rrrrr
**Manufacturer:** Ames
**Orientation:** H
**0.25% Pb:** No
**Renewed:** 21-Apr-2018
**Model:** 200B
**Meters:**
**Spare Parts Only:** Yes
**Bypass:**

---

**Type:** DC
**Size:** 1
**Manual:** 9
**Approved:** 21-Apr-2006
**Shutoffs:** (vv),xx,ooo,hhhh,pppp,rrrrr
**Manufacturer:** Ames
**Orientation:** VD
**0.25% Pb:** No
**Renewed:** 21-Apr-2018
**Model:** 200B
**Meters:**
**Spare Parts Only:** Yes
**Bypass:**

---

**Type:** DC
**Size:** 1
**Manual:** 9
**Approved:** 21-Apr-2006
**Shutoffs:** (vv),xx,ooo,hhhh,pppp,rrrrr
**Manufacturer:** Ames
**Orientation:** VU
**0.25% Pb:** No
**Renewed:** 21-Apr-2018
**Model:** 200B
**Meters:**
**Spare Parts Only:** Yes
**Bypass:**

---

**Type:** DC
**Size:** 1 1/4
**Manual:** 9
**Approved:** 21-Apr-2006
**Shutoffs:** (vv),xx,ooo,hhhh,pppp,rrrrr
**Manufacturer:** Ames
**Orientation:** H
**0.25% Pb:** No
**Renewed:** 21-Apr-2018
**Model:** 200B
**Meters:**
**Spare Parts Only:** Yes
**Bypass:**

---

**Type:** DC
**Size:** 1 1/4
**Manual:** 9
**Approved:** 21-Apr-2006
**Shutoffs:** (vv),xx,ooo,hhhh,pppp,rrrrr
**Manufacturer:** Ames
**Orientation:** VD
**0.25% Pb:** No
**Renewed:** 21-Apr-2018
**Model:** 200B
**Meters:**
**Spare Parts Only:** Yes
**Bypass:**


2018 © University of Southern California

**Type:** DC
**Size:** 1 1/4
**Manual:** 9
**Approved:** 21-Apr-2006
**Shutoffs:** (vv),xx,ooo,hhhh,pppp,rrrrr
**Manufacturer:** Ames
**Orientation:** VU
**0.25% Pb:** No
**Renewed:** 21-Apr-2018
**Model:** 200B
**Meters:**
**Spare Parts Only:** Yes
**Bypass:**

---

**Type:** DC
**Size:** 1 1/2
**Manual:** 9
**Approved:** 21-Apr-2006
**Shutoffs:** (vv),xx,ooo,hhhh,pppp,rrrrr
**Manufacturer:** Ames
**Orientation:** H
**0.25% Pb:** No
**Renewed:** 21-Apr-2018
**Model:** 200B
**Meters:**
**Spare Parts Only:** Yes
**Bypass:**

---

**Type:** DC
**Size:** 1 1/2
**Manual:** 9
**Approved:** 21-Apr-2006
**Shutoffs:** (vv),xx,ooo,hhhh,pppp,rrrrr
**Manufacturer:** Ames
**Orientation:** VD
**0.25% Pb:** No
**Renewed:** 21-Apr-2018
**Model:** 200B
**Meters:**
**Spare Parts Only:** Yes
**Bypass:**

---

**Type:** DC
**Size:** 1 1/2
**Manual:** 9
**Approved:** 21-Apr-2006
**Shutoffs:** (vv),xx,ooo,hhhh,pppp,rrrrr
**Manufacturer:** Ames
**Orientation:** VU
**0.25% Pb:** No
**Renewed:** 21-Apr-2018
**Model:** 200B
**Meters:**
**Spare Parts Only:** Yes
**Bypass:**

---

**Type:** DC
**Size:** 2
**Manual:** 9
**Approved:** 21-Apr-2006
**Shutoffs:** (vv),xx,ooo,hhhh,pppp,rrrrr
**Manufacturer:** Ames
**Orientation:** H
**0.25% Pb:** No
**Renewed:** 21-Apr-2018
**Model:** 200B
**Meters:**
**Spare Parts Only:** Yes
**Bypass:**

---

**Type:** DC
**Size:** 2
**Manual:** 9
**Approved:** 21-Apr-2006
**Shutoffs:** (vv),xx,ooo,hhhh,pppp,rrrrr
**Manufacturer:** Ames
**Orientation:** VD
**0.25% Pb:** No
**Renewed:** 21-Apr-2018
**Model:** 200B
**Meters:**
**Spare Parts Only:** Yes
**Bypass:**

---

**Type:** DC
**Size:** 2
**Manual:** 9
**Approved:** 21-Apr-2006
**Shutoffs:** (vv),xx,ooo,hhhh,pppp,rrrrr
**Manufacturer:** Ames
**Orientation:** VU
**0.25% Pb:** No
**Renewed:** 21-Apr-2018
**Model:** 200B
**Meters:**
**Spare Parts Only:** Yes
**Bypass:**

**Type:** DC
**Size:** 1/2
**Manual:** 9
**Approved:** 21-Apr-2006
**Shutoffs:** (vv),xx,ooo,hhhh,pppp,rrrrr
**Manufacturer:** Ames
**Orientation:** H
**0.25% Pb:** No
**Renewed:** 21-Apr-2018
**Model:** 200B R10
**Meters:**
**Spare Parts Only:** Yes
**Bypass:**

---

**Type:** DC
**Size:** 1/2
**Manual:** 9
**Approved:** 21-Apr-2006
**Shutoffs:** (vv),xx,ooo,hhhh,pppp,rrrrr
**Manufacturer:** Ames
**Orientation:** VD
**0.25% Pb:** No
**Renewed:** 21-Apr-2018
**Model:** 200B R10
**Meters:**
**Spare Parts Only:** Yes
**Bypass:**

---

**Type:** DC
**Size:** 1/2
**Manual:** 9
**Approved:** 21-Apr-2006
**Shutoffs:** (vv),xx,ooo,hhhh,pppp,rrrrr
**Manufacturer:** Ames
**Orientation:** VU
**0.25% Pb:** No
**Renewed:** 21-Apr-2018
**Model:** 200B R10
**Meters:**
**Spare Parts Only:** Yes
**Bypass:**

---

**Type:** DC
**Size:** 3/4
**Manual:** 9
**Approved:** 21-Apr-2006
**Shutoffs:** (vv),xx,ooo,hhhh,pppp,rrrrr
**Manufacturer:** Ames
**Orientation:** H
**0.25% Pb:** No
**Renewed:** 21-Apr-2018
**Model:** 200B R10
**Meters:**
**Spare Parts Only:** Yes
**Bypass:**

---

**Type:** DC
**Size:** 3/4
**Manual:** 9
**Approved:** 21-Apr-2006
**Shutoffs:** (vv),xx,ooo,hhhh,pppp,rrrrr
**Manufacturer:** Ames
**Orientation:** VD
**0.25% Pb:** No
**Renewed:** 21-Apr-2018
**Model:** 200B R10
**Meters:**
**Spare Parts Only:** Yes
**Bypass:**

---

**Type:** DC
**Size:** 3/4
**Manual:** 9
**Approved:** 21-Apr-2006
**Shutoffs:** (vv),xx,ooo,hhhh,pppp,rrrrr
**Manufacturer:** Ames
**Orientation:** VU
**0.25% Pb:** No
**Renewed:** 21-Apr-2018
**Model:** 200B R10
**Meters:**
**Spare Parts Only:** Yes
**Bypass:**

---

**Type:** DC
**Size:** 1/2
**Manual:** 9
**Approved:** 21-Apr-2006
**Shutoffs:** (vv),xx,ooo,hhhh,pppp,rrrrr
**Manufacturer:** Ames
**Orientation:** VUVD
**0.25% Pb:** No
**Renewed:** 21-Apr-2018
**Model:** 200B-A
**Meters:**
**Spare Parts Only:** Yes
**Bypass:**


2018 © University of Southern California

**Type:** DC
**Size:** 1
**Manual:** 9
**Approved:** 21-Apr-2006
**Shutoffs:** (vv),xx,ooo,hhhh,pppp,rrrrr
**Manufacturer:** Ames
**Orientation:** VUVD
**0.25% Pb:** No
**Renewed:** 21-Apr-2018
**Model:** 200B-A
**Meters:**
**Spare Parts Only:** Yes
**Bypass:**

---

**Type:** DC
**Size:** 1 1/4
**Manual:** 9
**Approved:** 21-Apr-2006
**Shutoffs:** (vv),xx,ooo,hhhh,pppp,rrrrr
**Manufacturer:** Ames
**Orientation:** VUVD
**0.25% Pb:** No
**Renewed:** 21-Apr-2018
**Model:** 200B-A
**Meters:**
**Spare Parts Only:** Yes
**Bypass:**

---

**Type:** DC
**Size:** 1 1/2
**Manual:** 9
**Approved:** 21-Apr-2006
**Shutoffs:** (vv),xx,ooo,hhhh,pppp,rrrrr
**Manufacturer:** Ames
**Orientation:** VUVD
**0.25% Pb:** No
**Renewed:** 21-Apr-2018
**Model:** 200B-A
**Meters:**
**Spare Parts Only:** Yes
**Bypass:**

---

**Type:** DC
**Size:** 2
**Manual:** 9
**Approved:** 21-Apr-2006
**Shutoffs:** (vv),xx,ooo,hhhh,pppp,rrrrr
**Manufacturer:** Ames
**Orientation:** VUVD
**0.25% Pb:** No
**Renewed:** 21-Apr-2018
**Model:** 200B-A
**Meters:**
**Spare Parts Only:** Yes
**Bypass:**

---

**Type:** DC
**Size:** 1/2
**Manual:** 9
**Approved:** 03-Jul-2013
**Shutoffs:** (vv),xx,ooo,hhhh,pppp,rrrrr
**Manufacturer:** Ames
**Orientation:** VUVD
**0.25% Pb:** No
**Renewed:** 03-Jul-2016
**Model:** 200B-AR10
**Meters:**
**Spare Parts Only:** Yes
**Bypass:**

---

**Type:** DC
**Size:** 3/4
**Manual:** 9
**Approved:** 03-Jul-2013
**Shutoffs:** (vv),xx,ooo,hhhh,pppp,rrrrr
**Manufacturer:** Ames
**Orientation:** VUVD
**0.25% Pb:** No
**Renewed:** 03-Jul-2016
**Model:** 200B-AR10
**Meters:**
**Spare Parts Only:** Yes
**Bypass:**

---

**Type:** DC
**Size:** 2 1/2
**Manual:** 9
**Approved:** 20-Jul-2004
**Shutoffs:** (ppp),qqq,nnnnn
**Manufacturer:** Ames
**Orientation:** H
**0.25% Pb:** No
**Renewed:** 20-Jul-2016
**Model:** Colt 200
**Meters:**
**Spare Parts Only:** No
**Bypass:**

**Type:** DC
**Manufacturer:** Ames
**Model:** Colt 200
**Size:** 2 1/2
**Orientation:** H
**Meters:**
**Manual:** 9
**0.25% Pb:** Yes
**Spare Parts Only:** No
**Approved:** 20-Jul-2004
**Renewed:** 20-Jul-2016
**Bypass:**
**Shutoffs:** yyy,zzz,dddd,eeee,dddd,gggg,kkkk,llll,mmmm,nnnn

---

**Type:** DC
**Manufacturer:** Ames
**Model:** Colt 200
**Size:** 2 1/2
**Orientation:** VU
**Meters:**
**Manual:** 9
**0.25% Pb:** No
**Spare Parts Only:** No
**Approved:** 20-Jul-2004
**Renewed:** 20-Jul-2016
**Bypass:**
**Shutoffs:** (ppp),qqq,nnnnn

---

**Type:** DC
**Manufacturer:** Ames
**Model:** Colt 200
**Size:** 2 1/2
**Orientation:** VU
**Meters:**
**Manual:** 9
**0.25% Pb:** Yes
**Spare Parts Only:** No
**Approved:** 20-Jul-2004
**Renewed:** 20-Jul-2016
**Bypass:**
**Shutoffs:** yyy,zzz,dddd,eeee,dddd,gggg,kkkk,llll,mmmm,nnnn

---

**Type:** DC
**Manufacturer:** Ames
**Model:** Colt 200
**Size:** 3
**Orientation:** H
**Meters:**
**Manual:** 9
**0.25% Pb:** No
**Spare Parts Only:** No
**Approved:** 20-Jul-2004
**Renewed:** 20-Jul-2016
**Bypass:**
**Shutoffs:** (ppp),qqq,nnnnn

---

**Type:** DC
**Manufacturer:** Ames
**Model:** Colt 200
**Size:** 3
**Orientation:** H
**Meters:**
**Manual:** 9
**0.25% Pb:** Yes
**Spare Parts Only:** No
**Approved:** 20-Jul-2004
**Renewed:** 20-Jul-2016
**Bypass:**
**Shutoffs:** yyy,zzz,dddd,eeee,dddd,gggg,kkkk,llll,mmmm,nnnn

---

**Type:** DC
**Manufacturer:** Ames
**Model:** Colt 200
**Size:** 3
**Orientation:** VU
**Meters:**
**Manual:** 9
**0.25% Pb:** No
**Spare Parts Only:** No
**Approved:** 20-Jul-2004
**Renewed:** 20-Jul-2016
**Bypass:**
**Shutoffs:** (ppp),qqq,nnnnn

---

**Type:** DC
**Manufacturer:** Ames
**Model:** Colt 200
**Size:** 3
**Orientation:** VU
**Meters:**
**Manual:** 9
**0.25% Pb:** Yes
**Spare Parts Only:** No
**Approved:** 20-Jul-2004
**Renewed:** 20-Jul-2016
**Bypass:**
**Shutoffs:** yyy,zzz,dddd,eeee,dddd,gggg,kkkk,llll,mmmm,nnnn


2018 © University of Southern California

**Type:** DC
**Manufacturer:** Ames
**Model:** Colt 200
**Size:** 4
**Orientation:** H
**Meters:**
**Manual:** 9
**0.25% Pb:** No
**Spare Parts Only:** No
**Approved:** 20-Jul-2004
**Renewed:** 20-Jul-2016
**Bypass:**
**Shutoffs:** (ppp),qqq,nnnnn

---

**Type:** DC
**Manufacturer:** Ames
**Model:** Colt 200
**Size:** 4
**Orientation:** H
**Meters:**
**Manual:** 9
**0.25% Pb:** Yes
**Spare Parts Only:** No
**Approved:** 20-Jul-2004
**Renewed:** 20-Jul-2016
**Bypass:**
**Shutoffs:** yyy,zzz,dddd,eeee,dddd,gggg,kkkk,llll,mmmm,nnnn

---

**Type:** DC
**Manufacturer:** Ames
**Model:** Colt 200
**Size:** 4
**Orientation:** VU
**Meters:**
**Manual:** 9
**0.25% Pb:** No
**Spare Parts Only:** No
**Approved:** 20-Jul-2004
**Renewed:** 20-Jul-2016
**Bypass:**
**Shutoffs:** (ppp),qqq,nnnnn

---

**Type:** DC
**Manufacturer:** Ames
**Model:** Colt 200
**Size:** 4
**Orientation:** VU
**Meters:**
**Manual:** 9
**0.25% Pb:** Yes
**Spare Parts Only:** No
**Approved:** 20-Jul-2004
**Renewed:** 20-Jul-2016
**Bypass:**
**Shutoffs:** yyy,zzz,dddd,eeee,dddd,gggg,kkkk,llll,mmmm,nnnn

---

**Type:** DC
**Manufacturer:** Ames
**Model:** Colt 200
**Size:** 6
**Orientation:** H
**Meters:**
**Manual:** 9
**0.25% Pb:** No
**Spare Parts Only:** No
**Approved:** 21-Apr-2006
**Renewed:** 21-Apr-2018
**Bypass:**
**Shutoffs:** (ppp),qqq,aaaa,bbbb,nnnnn

---

**Type:** DC
**Manufacturer:** Ames
**Model:** Colt 200
**Size:** 6
**Orientation:** H
**Meters:**
**Manual:** 9
**0.25% Pb:** Yes
**Spare Parts Only:** No
**Approved:** 21-Apr-2006
**Renewed:** 21-Apr-2018
**Bypass:**
**Shutoffs:** yyy,zzz,dddd,eeee,ffff,gggg,kkkk,llll,mmmm,nnnn

---

**Type:** DC
**Manufacturer:** Ames
**Model:** Colt 200
**Size:** 6
**Orientation:** VU
**Meters:**
**Manual:** 9
**0.25% Pb:** No
**Spare Parts Only:** No
**Approved:** 21-Apr-2006
**Renewed:** 21-Apr-2018
**Bypass:**
**Shutoffs:** (ppp),qqq,aaaa,bbbb,nnnnn

**Type:** DC **Manufacturer:** Ames **Model:** Colt 200
**Size:** 6 **Orientation:** VU **Meters:**
**Manual:** 9 **0.25% Pb:** Yes **Spare Parts Only:** No
**Approved:** 21-Apr-2006 **Renewed:** 21-Apr-2018 **Bypass:**
**Shutoffs:** yyy,zzz,dddd,eeee,ffff,gggg,kkkk,llll,mmmm,nnnn

---

**Type:** DC **Manufacturer:** Ames **Model:** Colt 200
**Size:** 8 **Orientation:** H **Meters:**
**Manual:** 9 **0.25% Pb:** No **Spare Parts Only:** No
**Approved:** 11-Aug-2004 **Renewed:** 11-Aug-2016 **Bypass:**
**Shutoffs:** ppp,qqq,aaaa,bbbb,nnnnn

---

**Type:** DC **Manufacturer:** Ames **Model:** Colt 200
**Size:** 8 **Orientation:** H **Meters:**
**Manual:** 9 **0.25% Pb:** Yes **Spare Parts Only:** No
**Approved:** 11-Aug-2004 **Renewed:** 11-Aug-2016 **Bypass:**
**Shutoffs:** (yyy),zzz,dddd,eeee,gggg,kkkk,llll,mmmm,nnnn

---

**Type:** DC **Manufacturer:** Ames **Model:** Colt 200
**Size:** 8 **Orientation:** VU **Meters:**
**Manual:** 9 **0.25% Pb:** No **Spare Parts Only:** No
**Approved:** 10-Feb-2006 **Renewed:** 10-Feb-2018 **Bypass:**
**Shutoffs:** ppp,qqq,aaaa,bbbb,nnnnn

---

**Type:** DC **Manufacturer:** Ames **Model:** Colt 200
**Size:** 8 **Orientation:** VU **Meters:**
**Manual:** 9 **0.25% Pb:** Yes **Spare Parts Only:** No
**Approved:** 10-Feb-2006 **Renewed:** 10-Feb-2018 **Bypass:**
**Shutoffs:** (yyy),zzz,dddd,eeee,gggg,kkkk,llll,mmmm,nnnn

---

**Type:** DC **Manufacturer:** Ames **Model:** Colt 200
**Size:** 10 **Orientation:** H **Meters:**
**Manual:** 9 **0.25% Pb:** No **Spare Parts Only:** No
**Approved:** 02-May-2008 **Renewed:** 02-May-2017 **Bypass:**
**Shutoffs:** ppp,qqq,aaaa,bbbb

---

**Type:** DC **Manufacturer:** Ames **Model:** Colt 200
**Size:** 10 **Orientation:** H **Meters:**
**Manual:** 9 **0.25% Pb:** Yes **Spare Parts Only:** No
**Approved:** 02-May-2008 **Renewed:** 02-May-2017 **Bypass:**
**Shutoffs:** yyy,zzz,dddd,eeee,ggg,kkkk,llll,mmmm,nnnn


2018 © University of Southern California

**Type:** DC **Manufacturer:** Ames **Model:** Colt 200
**Size:** 10 **Orientation:** VU **Meters:**
**Manual:** 9 **0.25% Pb:** No **Spare Parts Only:** No
**Approved:** 02-May-2008 **Renewed:** 02-May-2017 **Bypass:**
**Shutoffs:** (ppp),qqq,aaaa,bbbb

---

**Type:** DC **Manufacturer:** Ames **Model:** Colt 200
**Size:** 10 **Orientation:** VU **Meters:**
**Manual:** 9 **0.25% Pb:** Yes **Spare Parts Only:** No
**Approved:** 05-Dec-2014 **Renewed:** 05-Dec-2017 **Bypass:**
**Shutoffs:** yyy,zzz,dddd,eeee,ggg,kkkk,llll,mmmm,nnnn

---

**Type:** DC **Manufacturer:** Ames **Model:** Colt 200a
**Size:** 2 1/2 **Orientation:** H **Meters:**
**Manual:** 9 **0.25% Pb:** No **Spare Parts Only:** No
**Approved:** 07-Oct-2002 **Renewed:** 07-Oct-2017 **Bypass:**
**Shutoffs:** (ppp),fff,qqq,yyy,zzz,aaaa,bbbb,dddd,eeee,gggg,kkkk,llll,mmmm,nnnn,nnnnn

---

**Type:** DC **Manufacturer:** Ames **Model:** Colt 200a
**Size:** 2 1/2 **Orientation:** VU **Meters:**
**Manual:** 9 **0.25% Pb:** No **Spare Parts Only:** No
**Approved:** 07-Oct-2002 **Renewed:** 07-Oct-2017 **Bypass:**
**Shutoffs:** (ppp),qqq,yyy,zzz,aaaa,bbbb,dddd,eeee,ffff,gggg,kkkk,llll,mmmm,nnnn,nnnnn

---

**Type:** DC **Manufacturer:** Ames **Model:** Colt 200a
**Size:** 3 **Orientation:** H **Meters:**
**Manual:** 9 **0.25% Pb:** No **Spare Parts Only:** No
**Approved:** 07-Oct-2002 **Renewed:** 07-Oct-2017 **Bypass:**
**Shutoffs:** (ppp),qqq,yyy,zzz,aaaa,bbbb,dddd,eeee,ffff,gggg,kkkk,llll,mmmm,nnnn,nnnnn

---

**Type:** DC **Manufacturer:** Ames **Model:** Colt 200a
**Size:** 3 **Orientation:** VU **Meters:**
**Manual:** 9 **0.25% Pb:** No **Spare Parts Only:** No
**Approved:** 07-Oct-2002 **Renewed:** 07-Oct-2017 **Bypass:**
**Shutoffs:** (ppp),qqq,yyy,zzz,aaaa,bbbb,dddd,eeee,ffff,gggg,kkkk,llll,mmmm,nnnn,nnnnn

---

**Type:** DC **Manufacturer:** Ames **Model:** Colt 200a
**Size:** 4 **Orientation:** H **Meters:**
**Manual:** 9 **0.25% Pb:** No **Spare Parts Only:** No
**Approved:** 07-Oct-2002 **Renewed:** 07-Oct-2017 **Bypass:**
**Shutoffs:** (ppp),qqq,yyy,zzz,aaaa,bbbb,dddd,eeee,ffff,gggg,kkkk,llll,mmmm,nnnn,nnnnn

**Type:** DC **Manufacturer:** Ames **Model:** Colt 200a
**Size:** 4 **Orientation:** VU **Meters:**
**Manual:** 9 **0.25% Pb:** No **Spare Parts Only:** No
**Approved:** 07-Oct-2002 **Renewed:** 07-Oct-2017 **Bypass:**
**Shutoffs:** (ppp),qqq,yyy,zzz,aaaa,bbbb,dddd,eeee,ffff,gggg,kkkk,llll,mmmm,nnnn,nnnnn

---

**Type:** DC **Manufacturer:** Ames **Model:** Colt 200a
**Size:** 6 **Orientation:** H **Meters:**
**Manual:** 9 **0.25% Pb:** No **Spare Parts Only:** No
**Approved:** 03-Jul-2003 **Renewed:** 03-Jul-2018 **Bypass:**
**Shutoffs:** (ppp),qqq,yyy,zzz,aaaa,bbbb,dddd,eeee,ffff,gggg,kkkk,llll,mmmm,nnnn,nnnnn

---

**Type:** DC **Manufacturer:** Ames **Model:** Colt 200a
**Size:** 6 **Orientation:** VU **Meters:**
**Manual:** 9 **0.25% Pb:** No **Spare Parts Only:** No
**Approved:** 03-Jul-2003 **Renewed:** 03-Jul-2018 **Bypass:**
**Shutoffs:** (ppp),qqq,yyy,zzz,aaaa,bbbb,dddd,eeee,ffff,gggg,kkkk,llll,mmmm,nnnn,nnnnn

---

**Type:** DC **Manufacturer:** Ames **Model:** Colt 200N
**Size:** 2 1/2 **Orientation:** VUVD **Meters:**
**Manual:** 9 **0.25% Pb:** No **Spare Parts Only:** No
**Approved:** 07-Apr-2009 **Renewed:** 07-Apr-2018 **Bypass:**
**Shutoffs:** (ppp),qqq,nnnnn

---

**Type:** DC **Manufacturer:** Ames **Model:** Colt 200N
**Size:** 2 1/2 **Orientation:** VUVD **Meters:**
**Manual:** 9 **0.25% Pb:** Yes **Spare Parts Only:** No
**Approved:** 07-Apr-2009 **Renewed:** 07-Apr-2018 **Bypass:**
**Shutoffs:** yyy,zzz,dddd,eeee,dddd,gggg,kkkk,llll,mmmm,nnnn

---

**Type:** DC **Manufacturer:** Ames **Model:** Colt 200N
**Size:** 3 **Orientation:** VUVD **Meters:**
**Manual:** 9 **0.25% Pb:** No **Spare Parts Only:** No
**Approved:** 07-Apr-2009 **Renewed:** 07-Apr-2018 **Bypass:**
**Shutoffs:** (ppp),qqq,nnnnn

---

**Type:** DC **Manufacturer:** Ames **Model:** Colt 200N
**Size:** 3 **Orientation:** VUVD **Meters:**
**Manual:** 9 **0.25% Pb:** Yes **Spare Parts Only:** No
**Approved:** 07-Apr-2009 **Renewed:** 07-Apr-2018 **Bypass:**
**Shutoffs:** yyy,zzz,dddd,eeee,dddd,gggg,kkkk,llll,mmmm,nnnn


2018 © University of Southern California

**Type:** DC
**Manufacturer:** Ames
**Model:** Colt 200N
**Size:** 4
**Orientation:** VUVD
**Meters:**
**Manual:** 9
**0.25% Pb:** No
**Spare Parts Only:** No
**Approved:** 07-Apr-2009
**Renewed:** 07-Apr-2018
**Bypass:**
**Shutoffs:** (ppp),qqq,nnnnn

---

**Type:** DC
**Manufacturer:** Ames
**Model:** Colt 200N
**Size:** 4
**Orientation:** VUVD
**Meters:**
**Manual:** 9
**0.25% Pb:** Yes
**Spare Parts Only:** No
**Approved:** 07-Apr-2009
**Renewed:** 07-Apr-2018
**Bypass:**
**Shutoffs:** yyy,zzz,dddd,eeee,dddd,gggg,kkkk,llll,mmmm,nnnn

---

**Type:** DC
**Manufacturer:** Ames
**Model:** Colt 200N
**Size:** 6
**Orientation:** VUVD
**Meters:**
**Manual:** 9
**0.25% Pb:** No
**Spare Parts Only:** No
**Approved:** 07-Apr-2009
**Renewed:** 07-Apr-2018
**Bypass:**
**Shutoffs:** (ppp),qqq,nnnnn

---

**Type:** DC
**Manufacturer:** Ames
**Model:** Colt 200N
**Size:** 6
**Orientation:** VUVD
**Meters:**
**Manual:** 9
**0.25% Pb:** Yes
**Spare Parts Only:** No
**Approved:** 07-Apr-2009
**Renewed:** 07-Apr-2018
**Bypass:**
**Shutoffs:** yyy,zzz,dddd,eeee,dddd,gggg,kkkk,llll,mmmm,nnnn

---

**Type:** DC
**Manufacturer:** Ames
**Model:** Colt 200N
**Size:** 8
**Orientation:** VUVD
**Meters:**
**Manual:** 9
**0.25% Pb:** No
**Spare Parts Only:** No
**Approved:** 03-Jan-2013
**Renewed:** 03-Jan-2016
**Bypass:**
**Shutoffs:** ppp,qqq,aaaa,bbbb

---

**Type:** DC
**Manufacturer:** Ames
**Model:** Colt 200N
**Size:** 8
**Orientation:** VUVD
**Meters:**
**Manual:** 9
**0.25% Pb:** Yes
**Spare Parts Only:** No
**Approved:** 03-Jan-2013
**Renewed:** 03-Jan-2016
**Bypass:**
**Shutoffs:** yyy, zzz,dddd,eeee,gggg,kkkk,llll,mmmm,nnnn

---

**Type:** DC
**Manufacturer:** Ames
**Model:** Colt 200N
**Size:** 10
**Orientation:** VUVD
**Meters:**
**Manual:** 9
**0.25% Pb:** No
**Spare Parts Only:** No
**Approved:** 01-Sep-2009
**Renewed:** 01-Sep-2018
**Bypass:**
**Shutoffs:** (ppp),qqq

**Type:** DC **Manufacturer:** Ames **Model:** Colt 200N
**Size:** 10 **Orientation:** VUVD **Meters:**
**Manual:** 9 **0.25% Pb:** Yes **Spare Parts Only:** No
**Approved:** 01-Sep-2009 **Renewed:** 01-Sep-2018 **Bypass:**
**Shutoffs:** yyy,zzz,dddd,eeee,dddd,gggg,kkkk,llll,mmmm,nnnn

---

**Type:** DC **Manufacturer:** Ames **Model:** Colt 200Na
**Size:** 2 1/2 **Orientation:** VUVD **Meters:**
**Manual:** 9 **0.25% Pb:** No **Spare Parts Only:** No
**Approved:** 20-Mar-2003 **Renewed:** 20-Mar-2018 **Bypass:**
**Shutoffs:** (ppp),qqq,yyy,zzz,aaaa,bbbb,dddd,eeee,ffff,gggg,kkkk,llll,mmmm,nnnn,nnnnn

---

**Type:** DC **Manufacturer:** Ames **Model:** Colt 200Na
**Size:** 3 **Orientation:** VUVD **Meters:**
**Manual:** 9 **0.25% Pb:** No **Spare Parts Only:** No
**Approved:** 20-Mar-2003 **Renewed:** 20-Mar-2018 **Bypass:**
**Shutoffs:** (ppp),qqq,yyy,zzz,aaaa,bbbb,dddd,eeee,ffff,gggg,kkkk,llll,mmmm,nnnn,nnnnn

---

**Type:** DC **Manufacturer:** Ames **Model:** Colt 200Na
**Size:** 4 **Orientation:** VUVD **Meters:**
**Manual:** 9 **0.25% Pb:** No **Spare Parts Only:** No
**Approved:** 20-Mar-2003 **Renewed:** 20-Mar-2018 **Bypass:**
**Shutoffs:** (ppp),qqq,yyy,zzz,aaaa,bbbb,dddd,eeee,ffff,gggg,kkkk,llll,mmmm,nnnn,nnnnn

---

**Type:** DC **Manufacturer:** Ames **Model:** Colt 200Na
**Size:** 6 **Orientation:** VUVD **Meters:**
**Manual:** 9 **0.25% Pb:** No **Spare Parts Only:** No
**Approved:** 03-Jul-2003 **Renewed:** 03-Jul-2018 **Bypass:**
**Shutoffs:** (ppp),qqq,yyy,zzz,aaaa,bbbb,dddd,eeee,ffff,gggg,kkkk,llll,mmmm,nnnn,nnnnn

---

**Type:** DC **Manufacturer:** Ames **Model:** DC
**Size:** 4 **Orientation:** H **Meters:**
**Manual:** 6 **0.25% Pb:** No **Spare Parts Only:** Yes
**Approved:** 14-Jun-1985 **Renewed:** 14-Jun-2018 **Bypass:**
**Shutoffs:** oo,pp,ffff,gggg

---

**Type:** DC **Manufacturer:** Ames **Model:** DC
**Size:** 6 **Orientation:** H **Meters:**
**Manual:** 6 **0.25% Pb:** No **Spare Parts Only:** Yes
**Approved:** 14-Jun-1985 **Renewed:** 14-Jun-2018 **Bypass:**
**Shutoffs:** oo,pp,ffff,gggg


2018 © University of Southern California

**Type:** DC
**Manufacturer:** Ames
**Model:** DC
**Size:** 8
**Orientation:** H
**Meters:**
**Manual:** 7
**0.25% Pb:** No
**Spare Parts Only:** Yes
**Approved:** 04-Aug-1987
**Renewed:** 04-Aug-2017
**Bypass:**
**Shutoffs:** oo,pp,ffff,gggg

---

**Type:** DC
**Manufacturer:** Ames
**Model:** DC
**Size:** 10
**Orientation:**
**Meters:**
**Manual:**
**0.25% Pb:** No
**Spare Parts Only:** No
**Approved:**
**Renewed:**
**Bypass:**
**Notes:** model designation changed to 2000-DC

---

**Type:** DC
**Manufacturer:** Ames
**Model:** DC
**Size:** 10
**Orientation:**
**Meters:**
**Manual:**
**0.25% Pb:** No
**Spare Parts Only:** No
**Approved:**
**Renewed:**
**Bypass:**
**Notes:** model designation changed to 2000-G-DC

---

**Type:** DC
**Manufacturer:** Ames
**Model:** DCA
**Size:** 4
**Orientation:**
**Meters:**
**Manual:**
**0.25% Pb:** No
**Spare Parts Only:** No
**Approved:**
**Renewed:**
**Bypass:**
**Notes:** model designation changed to 2000-DCA

---

**Type:** DC
**Manufacturer:** Ames
**Model:** DCA
**Size:** 4
**Orientation:**
**Meters:**
**Manual:**
**0.25% Pb:** No
**Spare Parts Only:** No
**Approved:**
**Renewed:**
**Bypass:**
**Notes:** model designation changed to 2000-G-DCA

---

**Type:** DC
**Manufacturer:** Ames
**Model:** DCA
**Size:** 6
**Orientation:**
**Meters:**
**Manual:**
**0.25% Pb:** No
**Spare Parts Only:** No
**Approved:**
**Renewed:**
**Bypass:**
**Notes:** model designation changed to 2000-DCA

---

**Type:** DC
**Manufacturer:** Ames
**Model:** DCA
**Size:** 6
**Orientation:**
**Meters:**
**Manual:**
**0.25% Pb:** No
**Spare Parts Only:** No
**Approved:**
**Renewed:**
**Bypass:**
**Notes:** model designation changed to 2000-G-DCA

**Type:** DC
**Manufacturer:** Ames
**Model:** DCA
**Size:** 8
**Orientation:**
**Meters:**
**Manual:**
**0.25% Pb:** No
**Spare Parts Only:** No
**Approved:**
**Renewed:**
**Bypass:**
**Notes:** model designation changed to 2000-DCA

---

**Type:** DC
**Manufacturer:** Ames
**Model:** DCA
**Size:** 8
**Orientation:**
**Meters:**
**Manual:**
**0.25% Pb:** No
**Spare Parts Only:** No
**Approved:**
**Renewed:**
**Bypass:**
**Notes:** model designation changed to 2000-G-DCA

---

**Type:** DC
**Manufacturer:** Ames
**Model:** LF2000B
**Size:** 1/2
**Orientation:** H
**Meters:**
**Manual:** 9
**0.25% Pb:** Yes
**Spare Parts Only:** No
**Approved:** 25-Sep-2013
**Renewed:** 25-Sep-2016
**Bypass:**
**Shutoffs:** (hhhh)

---

**Type:** DC
**Manufacturer:** Ames
**Model:** LF2000B
**Size:** 1/2
**Orientation:** VU
**Meters:**
**Manual:** 9
**0.25% Pb:** Yes
**Spare Parts Only:** No
**Approved:** 25-Sep-2013
**Renewed:** 25-Sep-2016
**Bypass:**
**Shutoffs:** (hhhh)

---

**Type:** DC
**Manufacturer:** Ames
**Model:** LF2000BM1
**Size:** 1
**Orientation:** H
**Meters:**
**Manual:** 9
**0.25% Pb:** Yes
**Spare Parts Only:** No
**Approved:** 25-Sep-2013
**Renewed:** 25-Sep-2016
**Bypass:**
**Shutoffs:** (hhhh)

---

**Type:** DC
**Manufacturer:** Ames
**Model:** LF2000BM1
**Size:** 1
**Orientation:** VU
**Meters:**
**Manual:** 9
**0.25% Pb:** Yes
**Spare Parts Only:** No
**Approved:** 25-Sep-2013
**Renewed:** 25-Sep-2016
**Bypass:**
**Shutoffs:** (hhhh)

---

**Type:** DC
**Manufacturer:** Ames
**Model:** LF2000BM1
**Size:** 2
**Orientation:** H
**Meters:**
**Manual:** 9
**0.25% Pb:** Yes
**Spare Parts Only:** No
**Approved:** 25-Sep-2013
**Renewed:** 25-Sep-2016
**Bypass:**
**Shutoffs:** (hhhh)


2018 © University of Southern California

**Type:** DC
**Size:** 2
**Manual:** 9
**Approved:** 25-Sep-2013
**Shutoffs:** (hhhh)
**Manufacturer:** Ames
**Orientation:** VU
**0.25% Pb:** Yes
**Renewed:** 25-Sep-2016
**Model:** LF2000BM1
**Meters:**
**Spare Parts Only:** No
**Bypass:**

---

**Type:** DC
**Size:** 1 1/4
**Manual:** 8
**Approved:** 25-Sep-2013
**Shutoffs:** (hhhh)
**Manufacturer:** Ames
**Orientation:** H
**0.25% Pb:** Yes
**Renewed:** 25-Sep-2016
**Model:** LF2000BM2
**Meters:**
**Spare Parts Only:** No
**Bypass:**

---

**Type:** DC
**Size:** 1 1/4
**Manual:** 8
**Approved:** 25-Sep-2013
**Shutoffs:** (hhhh)
**Manufacturer:** Ames
**Orientation:** VU
**0.25% Pb:** Yes
**Renewed:** 25-Sep-2016
**Model:** LF2000BM2
**Meters:**
**Spare Parts Only:** No
**Bypass:**

---

**Type:** DC
**Size:** 1 1/2
**Manual:** 8
**Approved:** 25-Sep-2013
**Shutoffs:** (hhhh)
**Manufacturer:** Ames
**Orientation:** H
**0.25% Pb:** Yes
**Renewed:** 25-Sep-2016
**Model:** LF2000BM2
**Meters:**
**Spare Parts Only:** No
**Bypass:**

---

**Type:** DC
**Size:** 1 1/2
**Manual:** 8
**Approved:** 25-Sep-2013
**Shutoffs:** (hhhh)
**Manufacturer:** Ames
**Orientation:** VU
**0.25% Pb:** Yes
**Renewed:** 25-Sep-2016
**Model:** LF2000BM2
**Meters:**
**Spare Parts Only:** No
**Bypass:**

---

**Type:** DC
**Size:** 3/4
**Manual:** 9
**Approved:** 25-Sep-2013
**Shutoffs:** (hhhh)
**Manufacturer:** Ames
**Orientation:** H
**0.25% Pb:** Yes
**Renewed:** 25-Sep-2016
**Model:** LF2000BM3
**Meters:**
**Spare Parts Only:** No
**Bypass:**

---

**Type:** DC
**Size:** 3/4
**Manual:** 9
**Approved:** 25-Sep-2013
**Shutoffs:** (hhhh)
**Manufacturer:** Ames
**Orientation:** VU
**0.25% Pb:** Yes
**Renewed:** 25-Sep-2016
**Model:** LF2000BM3
**Meters:**
**Spare Parts Only:** No
**Bypass:**

**Type:** DC
**Size:** 1/2
**Manual:** 9
**Approved:** 03-Jul-2013
**Shutoffs:** (hhhh)
**Manufacturer:** Ames
**Orientation:** H
**0.25% Pb:** Yes
**Renewed:** 03-Jul-2016
**Model:** LF200B
**Meters:**
**Spare Parts Only:** Yes
**Bypass:**

---

**Type:** DC
**Size:** 1/2
**Manual:** 9
**Approved:** 03-Jul-2013
**Shutoffs:** (hhhh)
**Manufacturer:** Ames
**Orientation:** VD
**0.25% Pb:** Yes
**Renewed:** 03-Jul-2016
**Model:** LF200B
**Meters:**
**Spare Parts Only:** Yes
**Bypass:**

---

**Type:** DC
**Size:** 1/2
**Manual:** 9
**Approved:** 03-Jul-2013
**Shutoffs:** (hhhh)
**Manufacturer:** Ames
**Orientation:** VU
**0.25% Pb:** Yes
**Renewed:** 03-Jul-2016
**Model:** LF200B
**Meters:**
**Spare Parts Only:** Yes
**Bypass:**

---

**Type:** DC
**Size:** 3/4
**Manual:** 9
**Approved:** 03-Jul-2013
**Shutoffs:** (hhhh)
**Manufacturer:** Ames
**Orientation:** H
**0.25% Pb:** Yes
**Renewed:** 03-Jul-2016
**Model:** LF200B
**Meters:**
**Spare Parts Only:** Yes
**Bypass:**

---

**Type:** DC
**Size:** 3/4
**Manual:** 9
**Approved:** 03-Jul-2013
**Shutoffs:** (hhhh)
**Manufacturer:** Ames
**Orientation:** VD
**0.25% Pb:** Yes
**Renewed:** 03-Jul-2016
**Model:** LF200B
**Meters:**
**Spare Parts Only:** Yes
**Bypass:**

---

**Type:** DC
**Size:** 3/4
**Manual:** 9
**Approved:** 03-Jul-2013
**Shutoffs:** (hhhh)
**Manufacturer:** Ames
**Orientation:** VU
**0.25% Pb:** Yes
**Renewed:** 03-Jul-2016
**Model:** LF200B
**Meters:**
**Spare Parts Only:** Yes
**Bypass:**

---

**Type:** DC
**Size:** 1
**Manual:** 9
**Approved:** 14-Jun-2006
**Shutoffs:** (vv),xx,ooo,hhhh,pppp,rrrrr
**Manufacturer:** Ames
**Orientation:** H
**0.25% Pb:** No
**Renewed:** 14-Jun-2018
**Model:** LF200B
**Meters:**
**Spare Parts Only:** Yes
**Bypass:**


2018 © University of Southern California

**Type:** DC
**Size:** 1
**Manual:** 9
**Approved:** 14-Jun-2006
**Shutoffs:** (vv),xx,ooo,hhhh,pppp,rrrrr
**Manufacturer:** Ames
**Orientation:** VD
**0.25% Pb:** No
**Renewed:** 14-Jun-2018
**Model:** LF200B
**Meters:**
**Spare Parts Only:** Yes
**Bypass:**

---

**Type:** DC
**Size:** 1
**Manual:** 9
**Approved:** 14-Jun-2006
**Shutoffs:** (vv),xx,ooo,hhhh,pppp,rrrrr
**Manufacturer:** Ames
**Orientation:** VU
**0.25% Pb:** No
**Renewed:** 14-Jun-2018
**Model:** LF200B
**Meters:**
**Spare Parts Only:** Yes
**Bypass:**

---

**Type:** DC
**Size:** 1 1/4
**Manual:** 9
**Approved:** 14-Jun-2006
**Shutoffs:** (vv),xx,ooo,hhhh,pppp,rrrrr
**Manufacturer:** Ames
**Orientation:** H
**0.25% Pb:** No
**Renewed:** 14-Jun-2018
**Model:** LF200B
**Meters:**
**Spare Parts Only:** Yes
**Bypass:**

---

**Type:** DC
**Size:** 1 1/4
**Manual:** 9
**Approved:** 14-Jun-2006
**Shutoffs:** (vv),xx,ooo,hhhh,pppp,rrrrr
**Manufacturer:** Ames
**Orientation:** VD
**0.25% Pb:** No
**Renewed:** 14-Jun-2018
**Model:** LF200B
**Meters:**
**Spare Parts Only:** Yes
**Bypass:**

---

**Type:** DC
**Size:** 1 1/4
**Manual:** 9
**Approved:** 14-Jun-2006
**Shutoffs:** (vv),xx,ooo,hhhh,pppp,rrrrr
**Manufacturer:** Ames
**Orientation:** VU
**0.25% Pb:** No
**Renewed:** 14-Jun-2018
**Model:** LF200B
**Meters:**
**Spare Parts Only:** Yes
**Bypass:**

---

**Type:** DC
**Size:** 1 1/2
**Manual:** 9
**Approved:** 14-Jun-2006
**Shutoffs:** (vv),xx,ooo,hhhh,pppp,rrrrr
**Manufacturer:** Ames
**Orientation:** H
**0.25% Pb:** No
**Renewed:** 14-Jun-2018
**Model:** LF200B
**Meters:**
**Spare Parts Only:** Yes
**Bypass:**

---

**Type:** DC
**Size:** 1 1/2
**Manual:** 9
**Approved:** 14-Jun-2006
**Shutoffs:** (vv),xx,ooo,hhhh,pppp,rrrrr
**Manufacturer:** Ames
**Orientation:** VD
**0.25% Pb:** No
**Renewed:** 14-Jun-2018
**Model:** LF200B
**Meters:**
**Spare Parts Only:** Yes
**Bypass:**

**Type:** DC
**Manufacturer:** Ames
**Model:** LF200B
**Size:** 1 1/2
**Orientation:** VU
**Meters:**
**Manual:** 9
**0.25% Pb:** No
**Spare Parts Only:** Yes
**Approved:** 14-Jun-2006
**Renewed:** 14-Jun-2018
**Bypass:**
**Shutoffs:** (vv),xx,ooo,hhhh,pppp,rrrrr

---

**Type:** DC
**Manufacturer:** Ames
**Model:** LF200B
**Size:** 2
**Orientation:** H
**Meters:**
**Manual:** 9
**0.25% Pb:** No
**Spare Parts Only:** Yes
**Approved:** 14-Jun-2006
**Renewed:** 14-Jun-2018
**Bypass:**
**Shutoffs:** (vv),xx,ooo,hhhh,pppp,rrrrr

---

**Type:** DC
**Manufacturer:** Ames
**Model:** LF200B
**Size:** 2
**Orientation:** VD
**Meters:**
**Manual:** 9
**0.25% Pb:** No
**Spare Parts Only:** Yes
**Approved:** 14-Jun-2006
**Renewed:** 14-Jun-2018
**Bypass:**
**Shutoffs:** (vv),xx,ooo,hhhh,pppp,rrrrr

---

**Type:** DC
**Manufacturer:** Ames
**Model:** LF200B
**Size:** 2
**Orientation:** VU
**Meters:**
**Manual:** 9
**0.25% Pb:** No
**Spare Parts Only:** Yes
**Approved:** 14-Jun-2006
**Renewed:** 14-Jun-2018
**Bypass:**
**Shutoffs:** (vv),xx,ooo,hhhh,pppp,rrrrr

---

**Type:** DC
**Manufacturer:** Ames
**Model:** LF200B R10
**Size:** 1/2
**Orientation:** H
**Meters:**
**Manual:** 9
**0.25% Pb:** No
**Spare Parts Only:** Yes
**Approved:** 14-Jun-2006
**Renewed:** 14-Jun-2018
**Bypass:**
**Shutoffs:** (vv),xx,ooo,hhhh,pppp,rrrrr

---

**Type:** DC
**Manufacturer:** Ames
**Model:** LF200B R10
**Size:** 1/2
**Orientation:** VD
**Meters:**
**Manual:** 9
**0.25% Pb:** No
**Spare Parts Only:** Yes
**Approved:** 14-Jun-2006
**Renewed:** 14-Jun-2018
**Bypass:**
**Shutoffs:** (vv),xx,ooo,hhhh,pppp,rrrrr

---

**Type:** DC
**Manufacturer:** Ames
**Model:** LF200B R10
**Size:** 1/2
**Orientation:** VU
**Meters:**
**Manual:** 9
**0.25% Pb:** No
**Spare Parts Only:** Yes
**Approved:** 14-Jun-2006
**Renewed:** 14-Jun-2018
**Bypass:**
**Shutoffs:** (vv),xx,ooo,hhhh,pppp,rrrrr


2018 © University of Southern California

**Type:** DC
**Size:** 3/4
**Manual:** 9
**Approved:** 14-Jun-2006
**Shutoffs:** (vv),xx,ooo,hhhh,pppp,rrrrr
**Manufacturer:** Ames
**Orientation:** H
**0.25% Pb:** No
**Renewed:** 14-Jun-2018
**Model:** LF200B R10
**Meters:**
**Spare Parts Only:** Yes
**Bypass:**

---

**Type:** DC
**Size:** 3/4
**Manual:** 9
**Approved:** 14-Jun-2006
**Shutoffs:** (vv),xx,ooo,hhhh,pppp,rrrrr
**Manufacturer:** Ames
**Orientation:** VD
**0.25% Pb:** No
**Renewed:** 14-Jun-2018
**Model:** LF200B R10
**Meters:**
**Spare Parts Only:** Yes
**Bypass:**

---

**Type:** DC
**Size:** 3/4
**Manual:** 9
**Approved:** 14-Jun-2006
**Shutoffs:** (vv),xx,ooo,hhhh,pppp,rrrrr
**Manufacturer:** Ames
**Orientation:** VU
**0.25% Pb:** No
**Renewed:** 14-Jun-2018
**Model:** LF200B R10
**Meters:**
**Spare Parts Only:** Yes
**Bypass:**

---

**Type:** DC
**Size:** 1
**Manual:** 9
**Approved:** 14-Jun-2006
**Shutoffs:** (vv),xx,ooo,hhhh,pppp,rrrrr
**Manufacturer:** Ames
**Orientation:** VUVD
**0.25% Pb:** No
**Renewed:** 14-Jun-2018
**Model:** LF200B-A
**Meters:**
**Spare Parts Only:** Yes
**Bypass:**

---

**Type:** DC
**Size:** 1 1/4
**Manual:** 9
**Approved:** 14-Jun-2006
**Shutoffs:** (vv),xx,ooo,hhhh,pppp,rrrrr
**Manufacturer:** Ames
**Orientation:** VUVD
**0.25% Pb:** No
**Renewed:** 14-Jun-2018
**Model:** LF200B-A
**Meters:**
**Spare Parts Only:** Yes
**Bypass:**

---

**Type:** DC
**Size:** 1 1/2
**Manual:** 9
**Approved:** 14-Jun-2006
**Shutoffs:** (vv),xx,ooo,hhhh,pppp,rrrrr
**Manufacturer:** Ames
**Orientation:** VUVD
**0.25% Pb:** No
**Renewed:** 14-Jun-2018
**Model:** LF200B-A
**Meters:**
**Spare Parts Only:** Yes
**Bypass:**

---

**Type:** DC
**Size:** 2
**Manual:** 9
**Approved:** 14-Jun-2006
**Shutoffs:** (vv),xx,ooo,hhhh,pppp,rrrrr
**Manufacturer:** Ames
**Orientation:** VUVD
**0.25% Pb:** No
**Renewed:** 14-Jun-2018
**Model:** LF200B-A
**Meters:**
**Spare Parts Only:** Yes
**Bypass:**

**Type:** DC
**Size:** 1
**Manual:** 9
**Approved:** 14-Jun-2006
**Shutoffs:** (vv),xx,ooo,hhhh,pppp
**Manufacturer:** Ames
**Orientation:** H
**0.25% Pb:** No
**Renewed:** 14-Jun-2018
**Model:** LFU200B
**Meters:**
**Spare Parts Only:** Yes
**Bypass:**

---

**Type:** DC
**Size:** 1
**Manual:** 9
**Approved:** 14-Jun-2006
**Shutoffs:** (vv),xx,ooo,hhhh,pppp
**Manufacturer:** Ames
**Orientation:** VD
**0.25% Pb:** No
**Renewed:** 14-Jun-2018
**Model:** LFU200B
**Meters:**
**Spare Parts Only:** Yes
**Bypass:**

---

**Type:** DC
**Size:** 1
**Manual:** 9
**Approved:** 14-Jun-2006
**Shutoffs:** (vv),xx,ooo,hhhh,pppp
**Manufacturer:** Ames
**Orientation:** VU
**0.25% Pb:** No
**Renewed:** 14-Jun-2018
**Model:** LFU200B
**Meters:**
**Spare Parts Only:** Yes
**Bypass:**

---

**Type:** DC
**Size:** 1 1/4
**Manual:** 9
**Approved:** 14-Jun-2006
**Shutoffs:** (vv),xx,ooo,hhhh,pppp
**Manufacturer:** Ames
**Orientation:** H
**0.25% Pb:** No
**Renewed:** 14-Jun-2018
**Model:** LFU200B
**Meters:**
**Spare Parts Only:** Yes
**Bypass:**

---

**Type:** DC
**Size:** 1 1/4
**Manual:** 9
**Approved:** 14-Jun-2006
**Shutoffs:** (vv),xx,ooo,hhhh,pppp
**Manufacturer:** Ames
**Orientation:** VD
**0.25% Pb:** No
**Renewed:** 14-Jun-2018
**Model:** LFU200B
**Meters:**
**Spare Parts Only:** Yes
**Bypass:**

---

**Type:** DC
**Size:** 1 1/4
**Manual:** 9
**Approved:** 14-Jun-2006
**Shutoffs:** (vv),xx,ooo,hhhh,pppp
**Manufacturer:** Ames
**Orientation:** VU
**0.25% Pb:** No
**Renewed:** 14-Jun-2018
**Model:** LFU200B
**Meters:**
**Spare Parts Only:** Yes
**Bypass:**

---

**Type:** DC
**Size:** 1 1/2
**Manual:** 9
**Approved:** 14-Jun-2006
**Shutoffs:** (vv),xx,ooo,hhhh,pppp
**Manufacturer:** Ames
**Orientation:** H
**0.25% Pb:** No
**Renewed:** 14-Jun-2018
**Model:** LFU200B
**Meters:**
**Spare Parts Only:** Yes
**Bypass:**


2018 © University of Southern California

**Type:** DC
**Manufacturer:** Ames
**Model:** LFU200B
**Size:** 1 1/2
**Orientation:** VD
**Meters:**
**Manual:** 9
**0.25% Pb:** No
**Spare Parts Only:** Yes
**Approved:** 14-Jun-2006
**Renewed:** 14-Jun-2018
**Bypass:**
**Shutoffs:** (vv),xx,ooo,hhhh,pppp

---

**Type:** DC
**Manufacturer:** Ames
**Model:** LFU200B
**Size:** 1 1/2
**Orientation:** VU
**Meters:**
**Manual:** 9
**0.25% Pb:** No
**Spare Parts Only:** Yes
**Approved:** 14-Jun-2006
**Renewed:** 14-Jun-2018
**Bypass:**
**Shutoffs:** (vv),xx,ooo,hhhh,pppp

---

**Type:** DC
**Manufacturer:** Ames
**Model:** LFU200B
**Size:** 2
**Orientation:** H
**Meters:**
**Manual:** 9
**0.25% Pb:** No
**Spare Parts Only:** Yes
**Approved:** 14-Jun-2006
**Renewed:** 14-Jun-2018
**Bypass:**
**Shutoffs:** (vv),xx,ooo,hhhh,pppp

---

**Type:** DC
**Manufacturer:** Ames
**Model:** LFU200B
**Size:** 2
**Orientation:** VD
**Meters:**
**Manual:** 9
**0.25% Pb:** No
**Spare Parts Only:** Yes
**Approved:** 14-Jun-2006
**Renewed:** 14-Jun-2018
**Bypass:**
**Shutoffs:** (vv),xx,ooo,hhhh,pppp

---

**Type:** DC
**Manufacturer:** Ames
**Model:** LFU200B
**Size:** 2
**Orientation:** VU
**Meters:**
**Manual:** 9
**0.25% Pb:** No
**Spare Parts Only:** Yes
**Approved:** 14-Jun-2006
**Renewed:** 14-Jun-2018
**Bypass:**
**Shutoffs:** (vv),xx,ooo,hhhh,pppp

---

**Type:** DC
**Manufacturer:** Ames
**Model:** Maxim 200
**Size:** 2 1/2
**Orientation:** H
**Meters:**
**Manual:** 9
**0.25% Pb:** No
**Spare Parts Only:** No
**Approved:** 20-Jul-2004
**Renewed:** 20-Jul-2016
**Bypass:**
**Shutoffs:** (ppp),qqq,nnnnn

---

**Type:** DC
**Manufacturer:** Ames
**Model:** Maxim 200
**Size:** 2 1/2
**Orientation:** H
**Meters:**
**Manual:** 9
**0.25% Pb:** Yes
**Spare Parts Only:** No
**Approved:** 20-Jul-2004
**Renewed:** 20-Jul-2016
**Bypass:**
**Shutoffs:** yyy,dddd,eeee,gggg,kkkk,llll,mmmm,nnnn

**Type:** DC
**Manufacturer:** Ames
**Model:** Maxim 200
**Size:** 2 1/2
**Orientation:** VU
**Meters:**
**Manual:** 9
**0.25% Pb:** No
**Spare Parts Only:** No
**Approved:** 20-Jul-2004
**Renewed:** 20-Jul-2016
**Bypass:**
**Shutoffs:** (ppp),qqq,nnnnn

---

**Type:** DC
**Manufacturer:** Ames
**Model:** Maxim 200
**Size:** 2 1/2
**Orientation:** VU
**Meters:**
**Manual:** 9
**0.25% Pb:** Yes
**Spare Parts Only:** No
**Approved:** 20-Jul-2004
**Renewed:** 20-Jul-2016
**Bypass:**
**Shutoffs:** yyy,dddd,eeee,gggg,kkkk,llll,mmmm,nnnn

---

**Type:** DC
**Manufacturer:** Ames
**Model:** Maxim 200
**Size:** 3
**Orientation:** H
**Meters:**
**Manual:** 9
**0.25% Pb:** No
**Spare Parts Only:** No
**Approved:** 20-Jul-2004
**Renewed:** 20-Jul-2016
**Bypass:**
**Shutoffs:** (ppp),qqq,nnnnn

---

**Type:** DC
**Manufacturer:** Ames
**Model:** Maxim 200
**Size:** 3
**Orientation:** H
**Meters:**
**Manual:** 9
**0.25% Pb:** Yes
**Spare Parts Only:** No
**Approved:** 20-Jul-2004
**Renewed:** 20-Jul-2016
**Bypass:**
**Shutoffs:** yyy,dddd,eeee,gggg,kkkk,llll,mmmm,nnnn

---

**Type:** DC
**Manufacturer:** Ames
**Model:** Maxim 200
**Size:** 3
**Orientation:** VU
**Meters:**
**Manual:** 9
**0.25% Pb:** No
**Spare Parts Only:** No
**Approved:** 20-Jul-2004
**Renewed:** 20-Jul-2016
**Bypass:**
**Shutoffs:** (ppp),qqq,nnnnn

---

**Type:** DC
**Manufacturer:** Ames
**Model:** Maxim 200
**Size:** 3
**Orientation:** VU
**Meters:**
**Manual:** 9
**0.25% Pb:** Yes
**Spare Parts Only:** No
**Approved:** 20-Jul-2004
**Renewed:** 20-Jul-2016
**Bypass:**
**Shutoffs:** yyy,dddd,eeee,gggg,kkkk,llll,mmmm,nnnn

---

**Type:** DC
**Manufacturer:** Ames
**Model:** Maxim 200
**Size:** 4
**Orientation:** H
**Meters:**
**Manual:** 9
**0.25% Pb:** No
**Spare Parts Only:** No
**Approved:** 21-Apr-2006
**Renewed:** 21-Apr-2018
**Bypass:**
**Shutoffs:** (ppp),qqq,aaaa,bbbb,nnnnn


2018 © University of Southern California

**Type:** DC **Manufacturer:** Ames **Model:** Maxim 200
**Size:** 4 **Orientation:** H **Meters:**
**Manual:** 9 **0.25% Pb:** Yes **Spare Parts Only:** No
**Approved:** 21-Apr-2006 **Renewed:** 21-Apr-2018 **Bypass:**
**Shutoffs:** yyy,zzz,dddd,eeee,gggg,kkkk,llll,mmmm,nnnn

---

**Type:** DC **Manufacturer:** Ames **Model:** Maxim 200
**Size:** 4 **Orientation:** VU **Meters:**
**Manual:** 9 **0.25% Pb:** No **Spare Parts Only:** No
**Approved:** 21-Apr-2006 **Renewed:** 21-Apr-2018 **Bypass:**
**Shutoffs:** (ppp),qqq,aaaa,bbbb,nnnnn

---

**Type:** DC **Manufacturer:** Ames **Model:** Maxim 200
**Size:** 4 **Orientation:** VU **Meters:**
**Manual:** 9 **0.25% Pb:** Yes **Spare Parts Only:** No
**Approved:** 21-Apr-2006 **Renewed:** 21-Apr-2018 **Bypass:**
**Shutoffs:** yyy,zzz,dddd,eeee,gggg,kkkk,llll,mmmm,nnnn

---

**Type:** DC **Manufacturer:** Ames **Model:** Maxim 200
**Size:** 6 **Orientation:** H **Meters:**
**Manual:** 9 **0.25% Pb:** No **Spare Parts Only:** No
**Approved:** 11-Aug-2004 **Renewed:** 11-Aug-2016 **Bypass:**
**Shutoffs:** ppp,qqq,aaaa,bbbb,nnnnn

---

**Type:** DC **Manufacturer:** Ames **Model:** Maxim 200
**Size:** 6 **Orientation:** H **Meters:**
**Manual:** 9 **0.25% Pb:** Yes **Spare Parts Only:** No
**Approved:** 11-Aug-2004 **Renewed:** 11-Aug-2016 **Bypass:**
**Shutoffs:** (yyy),zzz,dddd,eeee,gggg,kkkk,llll,mmmm,nnnn

---

**Type:** DC **Manufacturer:** Ames **Model:** Maxim 200
**Size:** 6 **Orientation:** VU **Meters:**
**Manual:** 9 **0.25% Pb:** No **Spare Parts Only:** No
**Approved:** 10-Feb-2006 **Renewed:** 10-Feb-2018 **Bypass:**
**Shutoffs:** ppp,qqq,aaaa,bbbb,nnnnn

---

**Type:** DC **Manufacturer:** Ames **Model:** Maxim 200
**Size:** 6 **Orientation:** VU **Meters:**
**Manual:** 9 **0.25% Pb:** Yes **Spare Parts Only:** No
**Approved:** 10-Feb-2006 **Renewed:** 10-Feb-2018 **Bypass:**
**Shutoffs:** (yyy),zzz,dddd,eeee,gggg,kkkk,llll,mmmm,nnnn

**Type:** DC
**Size:** 8
**Manual:** 9
**Approved:** 02-May-2008
**Shutoffs:** ppp,qqq,aaaa,bbbb,nnnnn
**Manufacturer:** Ames
**Orientation:** H
**0.25% Pb:** No
**Renewed:** 02-May-2017
**Model:** Maxim 200
**Meters:**
**Spare Parts Only:** No
**Bypass:**

---

**Type:** DC
**Size:** 8
**Manual:** 9
**Approved:** 02-May-2008
**Shutoffs:** (yyy),zzz,dddd,eeee,gggg
**Manufacturer:** Ames
**Orientation:** H
**0.25% Pb:** Yes
**Renewed:** 02-May-2017
**Model:** Maxim 200
**Meters:**
**Spare Parts Only:** No
**Bypass:**

---

**Type:** DC
**Size:** 8
**Manual:** 9
**Approved:** 02-May-2008
**Shutoffs:** ppp,qqq,aaaa,bbbb,nnnnn
**Manufacturer:** Ames
**Orientation:** VU
**0.25% Pb:** No
**Renewed:** 02-May-2017
**Model:** Maxim 200
**Meters:**
**Spare Parts Only:** No
**Bypass:**

---

**Type:** DC
**Size:** 8
**Manual:** 9
**Approved:** 02-May-2008
**Shutoffs:** (yyy),zzz,dddd,eeee,gggg
**Manufacturer:** Ames
**Orientation:** VU
**0.25% Pb:** Yes
**Renewed:** 02-May-2017
**Model:** Maxim 200
**Meters:**
**Spare Parts Only:** No
**Bypass:**

---

**Type:** DC
**Size:** 10
**Manual:** 9
**Approved:** 20-Oct-2008
**Shutoffs:** (ppp),qqq,aaaa,bbbb
**Manufacturer:** Ames
**Orientation:** H
**0.25% Pb:** No
**Renewed:** 20-Oct-2017
**Model:** Maxim 200
**Meters:**
**Spare Parts Only:** No
**Bypass:**

---

**Type:** DC
**Size:** 10
**Manual:** 9
**Approved:** 20-Oct-2008
**Shutoffs:** yyy,zzz,dddd,eeee,gggg
**Manufacturer:** Ames
**Orientation:** H
**0.25% Pb:** Yes
**Renewed:** 20-Oct-2017
**Model:** Maxim 200
**Meters:**
**Spare Parts Only:** No
**Bypass:**

---

**Type:** DC
**Size:** 10
**Manual:** 9
**Approved:** 20-Oct-2008
**Shutoffs:** (ppp),qqq,aaaa,bbbb
**Manufacturer:** Ames
**Orientation:** VU
**0.25% Pb:** No
**Renewed:** 20-Oct-2017
**Model:** Maxim 200
**Meters:**
**Spare Parts Only:** No
**Bypass:**


2018 © University of Southern California

**Type:** DC
**Manufacturer:** Ames
**Model:** Maxim 200
**Size:** 10
**Orientation:** VU
**Meters:**
**Manual:** 9
**0.25% Pb:** Yes
**Spare Parts Only:** No
**Approved:** 20-Oct-2008
**Renewed:** 20-Oct-2017
**Bypass:**
**Shutoffs:** yyy,zzz,dddd,eeee,gggg

---

**Type:** DC
**Manufacturer:** Ames
**Model:** Maxim 200a
**Size:** 2 1/2
**Orientation:** H
**Meters:**
**Manual:** 9
**0.25% Pb:** No
**Spare Parts Only:** No
**Approved:** 07-Oct-2002
**Renewed:** 07-Oct-2017
**Bypass:**
**Shutoffs:** (yyy),ppp,qqq,zzz,aaaa,bbbb,dddd,eeee,gggg,nnnnn

---

**Type:** DC
**Manufacturer:** Ames
**Model:** Maxim 200a
**Size:** 2 1/2
**Orientation:** VU
**Meters:**
**Manual:** 9
**0.25% Pb:** No
**Spare Parts Only:** No
**Approved:** 07-Oct-2002
**Renewed:** 07-Oct-2017
**Bypass:**
**Shutoffs:** (yyy),ppp,qqq,zzz,aaaa,bbbb,dddd,eeee,gggg,nnnnn

---

**Type:** DC
**Manufacturer:** Ames
**Model:** Maxim 200a
**Size:** 3
**Orientation:** H
**Meters:**
**Manual:** 9
**0.25% Pb:** No
**Spare Parts Only:** No
**Approved:** 07-Oct-2002
**Renewed:** 07-Oct-2017
**Bypass:**
**Shutoffs:** (yyy),ppp,qqq,zzz,aaaa,bbbb,dddd,eeee,gggg,nnnnn

---

**Type:** DC
**Manufacturer:** Ames
**Model:** Maxim 200a
**Size:** 3
**Orientation:** VU
**Meters:**
**Manual:** 9
**0.25% Pb:** No
**Spare Parts Only:** No
**Approved:** 07-Oct-2002
**Renewed:** 07-Oct-2017
**Bypass:**
**Shutoffs:** (yyy),ppp,qqq,zzz,aaaa,bbbb,dddd,eeee,gggg,nnnnn

---

**Type:** DC
**Manufacturer:** Ames
**Model:** Maxim 200a
**Size:** 4
**Orientation:** H
**Meters:**
**Manual:** 9
**0.25% Pb:** No
**Spare Parts Only:** No
**Approved:** 03-Jul-2003
**Renewed:** 03-Jul-2018
**Bypass:**
**Shutoffs:** (yyy),ppp,qqq,zzz,aaaa,bbbb,dddd,eeee,gggg,nnnnn

---

**Type:** DC
**Manufacturer:** Ames
**Model:** Maxim 200a
**Size:** 4
**Orientation:** VU
**Meters:**
**Manual:** 9
**0.25% Pb:** No
**Spare Parts Only:** No
**Approved:** 03-Jul-2003
**Renewed:** 03-Jul-2018
**Bypass:**
**Shutoffs:** (yyy),ppp,qqq,zzz,aaaa,bbbb,dddd,eeee,gggg,nnnnn

**Type:** DC
**Manufacturer:** Ames
**Model:** Maxim 200N
**Size:** 2 1/2
**Orientation:** VUVD
**Meters:**
**Manual:** 9
**0.25% Pb:** No
**Spare Parts Only:** No
**Approved:** 07-Apr-2009
**Renewed:** 07-Apr-2018
**Bypass:**
**Shutoffs:** (ppp),qqq,nnnnn

---

**Type:** DC
**Manufacturer:** Ames
**Model:** Maxim 200N
**Size:** 2 1/2
**Orientation:** VUVD
**Meters:**
**Manual:** 9
**0.25% Pb:** Yes
**Spare Parts Only:** No
**Approved:** 07-Apr-2009
**Renewed:** 07-Apr-2018
**Bypass:**
**Shutoffs:** yyy,zzz,dddd,eeee,dddd,gggg,kkkk,llll,mmmm,nnnn

---

**Type:** DC
**Manufacturer:** Ames
**Model:** Maxim 200N
**Size:** 3
**Orientation:** VUVD
**Meters:**
**Manual:** 9
**0.25% Pb:** No
**Spare Parts Only:** No
**Approved:** 07-Apr-2009
**Renewed:** 07-Apr-2018
**Bypass:**
**Shutoffs:** (ppp),qqq,nnnnn

---

**Type:** DC
**Manufacturer:** Ames
**Model:** Maxim 200N
**Size:** 3
**Orientation:** VUVD
**Meters:**
**Manual:** 9
**0.25% Pb:** Yes
**Spare Parts Only:** No
**Approved:** 07-Apr-2009
**Renewed:** 07-Apr-2018
**Bypass:**
**Shutoffs:** yyy,zzz,dddd,eeee,dddd,gggg,kkkk,llll,mmmm,nnnn

---

**Type:** DC
**Manufacturer:** Ames
**Model:** Maxim 200N
**Size:** 4
**Orientation:** VUVD
**Meters:**
**Manual:** 9
**0.25% Pb:** No
**Spare Parts Only:** No
**Approved:** 07-Apr-2009
**Renewed:** 07-Apr-2018
**Bypass:**
**Shutoffs:** (ppp),qqq,nnnnn

---

**Type:** DC
**Manufacturer:** Ames
**Model:** Maxim 200N
**Size:** 4
**Orientation:** VUVD
**Meters:**
**Manual:** 9
**0.25% Pb:** Yes
**Spare Parts Only:** No
**Approved:** 07-Apr-2009
**Renewed:** 07-Apr-2018
**Bypass:**
**Shutoffs:** yyy,zzz,dddd,eeee,dddd,gggg,kkkk,llll,mmmm,nnnn

---

**Type:** DC
**Manufacturer:** Ames
**Model:** Maxim 200N
**Size:** 6
**Orientation:** VUVD
**Meters:**
**Manual:** 9
**0.25% Pb:** No
**Spare Parts Only:** No
**Approved:** 03-Jan-2013
**Renewed:** 03-Jan-2016
**Bypass:**
**Shutoffs:** ppp,qqq,aaaa,bbbb


2018 © University of Southern California

**Type:** DC
**Manufacturer:** Ames
**Model:** Maxim 200N
**Size:** 6
**Orientation:** VUVD
**Meters:**
**Manual:** 9
**0.25% Pb:** Yes
**Spare Parts Only:** No
**Approved:** 03-Jan-2013
**Renewed:** 03-Jan-2016
**Bypass:**
**Shutoffs:** yyy,zzz,dddd,eeee,gggg,kkkk,llll,mmmm,nnnn

---

**Type:** DC
**Manufacturer:** Ames
**Model:** Maxim 200N
**Size:** 8
**Orientation:** VUVD
**Meters:**
**Manual:** 9
**0.25% Pb:** No
**Spare Parts Only:** No
**Approved:** 01-Sep-2009
**Renewed:** 01-Sep-2018
**Bypass:**
**Shutoffs:** (ppp),qqq,nnnnn

---

**Type:** DC
**Manufacturer:** Ames
**Model:** Maxim 200N
**Size:** 8
**Orientation:** VUVD
**Meters:**
**Manual:** 9
**0.25% Pb:** Yes
**Spare Parts Only:** No
**Approved:** 01-Sep-2009
**Renewed:** 01-Sep-2018
**Bypass:**
**Shutoffs:** yyy,zzz,dddd,eeee,gggg,kkkk,llll,mmmm,nnnn

---

**Type:** DC
**Manufacturer:** Ames
**Model:** Maxim 200Na
**Size:** 2 1/2
**Orientation:** VUVD
**Meters:**
**Manual:** 9
**0.25% Pb:** No
**Spare Parts Only:** No
**Approved:** 20-Mar-2003
**Renewed:** 20-Mar-2018
**Bypass:**
**Shutoffs:** (yyy),ppp,qqq,zzz,aaaa,bbbb,dddd,eeee,gggg,nnnnn

---

**Type:** DC
**Manufacturer:** Ames
**Model:** Maxim 200Na
**Size:** 3
**Orientation:** VUVD
**Meters:**
**Manual:** 9
**0.25% Pb:** No
**Spare Parts Only:** No
**Approved:** 20-Mar-2003
**Renewed:** 20-Mar-2018
**Bypass:**
**Shutoffs:** (yyy),ppp,qqq,zzz,aaaa,bbbb,dddd,eeee,gggg,nnnnn

---

**Type:** DC
**Manufacturer:** Ames
**Model:** Maxim 200Na
**Size:** 4
**Orientation:** VUVD
**Meters:**
**Manual:** 9
**0.25% Pb:** No
**Spare Parts Only:** No
**Approved:** 03-Jul-2003
**Renewed:** 03-Jul-2018
**Bypass:**
**Shutoffs:** (yyy),ppp,qqq,zzz,aaaa,bbbb,dddd,eeee,gggg,nnnnn

---

**Type:** DC
**Manufacturer:** Ames
**Model:** U200B
**Size:** 1
**Orientation:** H
**Meters:**
**Manual:** 9
**0.25% Pb:** No
**Spare Parts Only:** Yes
**Approved:** 21-Apr-2006
**Renewed:** 21-Apr-2018
**Bypass:**
**Shutoffs:** (vv),xx,ooo,hhhh,pppp

**Type:** DC
**Size:** 1
**Manual:** 9
**Approved:** 21-Apr-2006
**Shutoffs:** (vv),xx,ooo,hhhh,pppp
**Manufacturer:** Ames
**Orientation:** VD
**0.25% Pb:** No
**Renewed:** 21-Apr-2018
**Model:** U200B
**Meters:**
**Spare Parts Only:** Yes
**Bypass:**

---

**Type:** DC
**Size:** 1
**Manual:** 9
**Approved:** 21-Apr-2006
**Shutoffs:** (vv),xx,ooo,hhhh,pppp
**Manufacturer:** Ames
**Orientation:** VU
**0.25% Pb:** No
**Renewed:** 21-Apr-2018
**Model:** U200B
**Meters:**
**Spare Parts Only:** Yes
**Bypass:**

---

**Type:** DC
**Size:** 1 1/4
**Manual:** 9
**Approved:** 21-Apr-2006
**Shutoffs:** (vv),xx,ooo,hhhh,pppp
**Manufacturer:** Ames
**Orientation:** H
**0.25% Pb:** No
**Renewed:** 21-Apr-2018
**Model:** U200B
**Meters:**
**Spare Parts Only:** Yes
**Bypass:**

---

**Type:** DC
**Size:** 1 1/4
**Manual:** 9
**Approved:** 21-Apr-2006
**Shutoffs:** (vv),xx,ooo,hhhh,pppp
**Manufacturer:** Ames
**Orientation:** VD
**0.25% Pb:** No
**Renewed:** 21-Apr-2018
**Model:** U200B
**Meters:**
**Spare Parts Only:** Yes
**Bypass:**

---

**Type:** DC
**Size:** 1 1/4
**Manual:** 9
**Approved:** 21-Apr-2006
**Shutoffs:** (vv),xx,ooo,hhhh,pppp
**Manufacturer:** Ames
**Orientation:** VU
**0.25% Pb:** No
**Renewed:** 21-Apr-2018
**Model:** U200B
**Meters:**
**Spare Parts Only:** Yes
**Bypass:**

---

**Type:** DC
**Size:** 1 1/2
**Manual:** 9
**Approved:** 21-Apr-2006
**Shutoffs:** (vv),xx,ooo,hhhh,pppp
**Manufacturer:** Ames
**Orientation:** H
**0.25% Pb:** No
**Renewed:** 21-Apr-2018
**Model:** U200B
**Meters:**
**Spare Parts Only:** Yes
**Bypass:**

---

**Type:** DC
**Size:** 1 1/2
**Manual:** 9
**Approved:** 21-Apr-2006
**Shutoffs:** (vv),xx,ooo,hhhh,pppp
**Manufacturer:** Ames
**Orientation:** VD
**0.25% Pb:** No
**Renewed:** 21-Apr-2018
**Model:** U200B
**Meters:**
**Spare Parts Only:** Yes
**Bypass:**


2018 © University of Southern California

**Type:** DC
**Size:** 1 1/2
**Manual:** 9
**Approved:** 21-Apr-2006
**Shutoffs:** (vv),xx,ooo,hhhh,pppp
**Manufacturer:** Ames
**Orientation:** VU
**0.25% Pb:** No
**Renewed:** 21-Apr-2018
**Model:** U200B
**Meters:**
**Spare Parts Only:** Yes
**Bypass:**

---

**Type:** DC
**Size:** 2
**Manual:** 9
**Approved:** 21-Apr-2006
**Shutoffs:** (vv),xx,ooo,hhhh,pppp
**Manufacturer:** Ames
**Orientation:** H
**0.25% Pb:** No
**Renewed:** 21-Apr-2018
**Model:** U200B
**Meters:**
**Spare Parts Only:** Yes
**Bypass:**

---

**Type:** DC
**Size:** 2
**Manual:** 9
**Approved:** 21-Apr-2006
**Shutoffs:** (vv),xx,ooo,hhhh,pppp
**Manufacturer:** Ames
**Orientation:** VD
**0.25% Pb:** No
**Renewed:** 21-Apr-2018
**Model:** U200B
**Meters:**
**Spare Parts Only:** Yes
**Bypass:**

---

**Type:** DC
**Size:** 2
**Manual:** 9
**Approved:** 21-Apr-2006
**Shutoffs:** (vv),xx,ooo,hhhh,pppp
**Manufacturer:** Ames
**Orientation:** VU
**0.25% Pb:** No
**Renewed:** 21-Apr-2018
**Model:** U200B
**Meters:**
**Spare Parts Only:** Yes
**Bypass:**

---

**Type:** DC
**Size:** 1/2
**Manual:** 9
**Approved:** 21-Apr-2006
**Shutoffs:** (vv),xx,ooo,hhhh,pppp
**Manufacturer:** Ames
**Orientation:** H
**0.25% Pb:** No
**Renewed:** 21-Apr-2018
**Model:** U200BR10
**Meters:**
**Spare Parts Only:** Yes
**Bypass:**

---

**Type:** DC
**Size:** 1/2
**Manual:** 9
**Approved:** 21-Apr-2006
**Shutoffs:** (vv),xx,ooo,hhhh,pppp
**Manufacturer:** Ames
**Orientation:** VD
**0.25% Pb:** No
**Renewed:** 21-Apr-2018
**Model:** U200BR10
**Meters:**
**Spare Parts Only:** Yes
**Bypass:**

---

**Type:** DC
**Size:** 1/2
**Manual:** 9
**Approved:** 21-Apr-2006
**Shutoffs:** (vv),xx,ooo,hhhh,pppp
**Manufacturer:** Ames
**Orientation:** VU
**0.25% Pb:** No
**Renewed:** 21-Apr-2018
**Model:** U200BR10
**Meters:**
**Spare Parts Only:** Yes
**Bypass:**

**Type:** DC
**Manufacturer:** Ames
**Model:** U200BR10
**Size:** 3/4
**Orientation:** H
**Meters:**
**Manual:** 9
**0.25% Pb:** No
**Spare Parts Only:** Yes
**Approved:** 21-Apr-2006
**Renewed:** 21-Apr-2018
**Bypass:**
**Shutoffs:** (vv),xx,ooo,hhhh,pppp

---

**Type:** DC
**Manufacturer:** Ames
**Model:** U200BR10
**Size:** 3/4
**Orientation:** VD
**Meters:**
**Manual:** 9
**0.25% Pb:** No
**Spare Parts Only:** Yes
**Approved:** 21-Apr-2006
**Renewed:** 21-Apr-2018
**Bypass:**
**Shutoffs:** (vv),xx,ooo,hhhh,pppp

---

**Type:** DC
**Manufacturer:** Ames
**Model:** U200BR10
**Size:** 3/4
**Orientation:** VU
**Meters:**
**Manual:** 9
**0.25% Pb:** No
**Spare Parts Only:** Yes
**Approved:** 21-Apr-2006
**Renewed:** 21-Apr-2018
**Bypass:**
**Shutoffs:** (vv),xx,ooo,hhhh,pppp

---

**Type:** DC
**Manufacturer:** Apollo/Conbraco
**Model:** 1/2DC
**Size:** 1/2
**Orientation:**
**Meters:**
**Manual:**
**0.25% Pb:** No
**Spare Parts Only:** No
**Approved:**
**Renewed:**
**Bypass:**
**Notes:** model designation changed to DC4S

---

**Type:** DC
**Manufacturer:** Apollo/Conbraco
**Model:** 1/2DC
**Size:** 1/2
**Orientation:**
**Meters:**
**Manual:**
**0.25% Pb:** No
**Spare Parts Only:** No
**Approved:**
**Renewed:**
**Bypass:**
**Notes:** model designation changed to DC4S

---

**Type:** DC
**Manufacturer:** Apollo/Conbraco
**Model:** 10DC
**Size:** 10
**Orientation:**
**Meters:**
**Manual:**
**0.25% Pb:** No
**Spare Parts Only:** No
**Approved:**
**Renewed:**
**Bypass:**
**Notes:** model designation changed to DC4S

---

**Type:** DC
**Manufacturer:** Apollo/Conbraco
**Model:** 10DC
**Size:** 10
**Orientation:**
**Meters:**
**Manual:**
**0.25% Pb:** No
**Spare Parts Only:** No
**Approved:**
**Renewed:**
**Bypass:**
**Notes:** model designation changed to DC4S


2018 © University of Southern California

**Type:** DC
**Size:** 2 1/2
**Manual:** 9
**Approved:** 16-Oct-2000
**Shutoffs:** (ll),mm
**Manufacturer:** Apollo/Conbraco
**Orientation:** H
**0.25% Pb:** No
**Renewed:** 16-Oct-2018
**Model:** 2 1/2DC
**Meters:**
**Spare Parts Only:** Yes
**Bypass:**

---

**Type:** DC
**Size:** 2 1/2
**Manual:** 9
**Approved:** 16-Oct-2000
**Shutoffs:** (ll),mm
**Manufacturer:** Apollo/Conbraco
**Orientation:** VU
**0.25% Pb:** No
**Renewed:** 16-Oct-2018
**Model:** 2 1/2DC
**Meters:**
**Spare Parts Only:** Yes
**Bypass:**

---

**Type:** DC
**Size:** 2 1/2
**Manual:** 9
**Approved:** 23-Oct-2001
**Shutoffs:** (mm)[#1SOV], (qqq)[#2SOV]
**Manufacturer:** Apollo/Conbraco
**Orientation:** H
**0.25% Pb:** No
**Renewed:** 23-Oct-2016
**Model:** 2 1/2DC-7
**Meters:**
**Spare Parts Only:** Yes
**Bypass:**

---

**Type:** DC
**Size:** 2 1/2
**Manual:** 9
**Approved:** 23-Oct-2001
**Shutoffs:** (mm)[#1SOV], (qqq)[#2SOV]
**Manufacturer:** Apollo/Conbraco
**Orientation:** VU
**0.25% Pb:** No
**Renewed:** 23-Oct-2016
**Model:** 2 1/2DC-7
**Meters:**
**Spare Parts Only:** Yes
**Bypass:**

---

**Type:** DC
**Size:** 2 1/2
**Manual:** 9
**Approved:** 29-Sep-2004
**Shutoffs:** (ppp),qqq
**Manufacturer:** Apollo/Conbraco
**Orientation:** H
**0.25% Pb:** No
**Renewed:** 29-Sep-2016
**Model:** 2 1/2DC8
**Meters:**
**Spare Parts Only:** Yes
**Bypass:**

---

**Type:** DC
**Size:** 2 1/2
**Manual:** 9
**Approved:** 29-Sep-2004
**Shutoffs:** (ppp),qqq
**Manufacturer:** Apollo/Conbraco
**Orientation:** VU
**0.25% Pb:** No
**Renewed:** 29-Sep-2016
**Model:** 2 1/2DC8
**Meters:**
**Spare Parts Only:** Yes
**Bypass:**

---

**Type:** DC
**Size:** 2 1/2
**Manual:** 9
**Approved:** 10-Apr-2001
**Shutoffs:** (ll),mm
**Manufacturer:** Apollo/Conbraco
**Orientation:** VUVD
**0.25% Pb:** No
**Renewed:** 10-Apr-2016
**Model:** 2 1/2DCU
**Meters:**
**Spare Parts Only:** Yes
**Bypass:**

**Type:** DC
**Size:** 2 1/2
**Manual:** 9
**Approved:** 10-Apr-2001
**Shutoffs:** (ll),mm

**Manufacturer:** Apollo/Conbraco
**Orientation:** VUVD
**0.25% Pb:** No
**Renewed:** 10-Apr-2016

**Model:** 2 1/2DCU
**Meters:**
**Spare Parts Only:** Yes
**Bypass:**

---

**Type:** DC
**Size:** 3
**Manual:** 9
**Approved:** 16-Oct-2000
**Shutoffs:** (ll),mm

**Manufacturer:** Apollo/Conbraco
**Orientation:** H
**0.25% Pb:** No
**Renewed:** 16-Oct-2018

**Model:** 3DC
**Meters:**
**Spare Parts Only:** Yes
**Bypass:**

---

**Type:** DC
**Size:** 3
**Manual:** 9
**Approved:** 16-Oct-2000
**Shutoffs:** (ll),mm

**Manufacturer:** Apollo/Conbraco
**Orientation:** VU
**0.25% Pb:** No
**Renewed:** 16-Oct-2018

**Model:** 3DC
**Meters:**
**Spare Parts Only:** Yes
**Bypass:**

---

**Type:** DC
**Size:** 3
**Manual:** 9
**Approved:** 23-Oct-2001
**Shutoffs:** (mm)[#1SOV], (qqq)[#2SOV]

**Manufacturer:** Apollo/Conbraco
**Orientation:** H
**0.25% Pb:** No
**Renewed:** 23-Oct-2016

**Model:** 3DC7
**Meters:**
**Spare Parts Only:** Yes
**Bypass:**

---

**Type:** DC
**Size:** 3
**Manual:** 9
**Approved:** 23-Oct-2001
**Shutoffs:** (mm)[#1SOV], (qqq)[#2SOV]

**Manufacturer:** Apollo/Conbraco
**Orientation:** VU
**0.25% Pb:** No
**Renewed:** 23-Oct-2016

**Model:** 3DC7
**Meters:**
**Spare Parts Only:** Yes
**Bypass:**

---

**Type:** DC
**Size:** 3
**Manual:** 9
**Approved:** 29-Sep-2004
**Shutoffs:** (ppp),qqq

**Manufacturer:** Apollo/Conbraco
**Orientation:** H
**0.25% Pb:** No
**Renewed:** 29-Sep-2016

**Model:** 3DC8
**Meters:**
**Spare Parts Only:** Yes
**Bypass:**

---

**Type:** DC
**Size:** 3
**Manual:** 9
**Approved:** 29-Sep-2004
**Shutoffs:** (ppp),qqq

**Manufacturer:** Apollo/Conbraco
**Orientation:** VU
**0.25% Pb:** No
**Renewed:** 29-Sep-2016

**Model:** 3DC8
**Meters:**
**Spare Parts Only:** Yes
**Bypass:**


2018 © University of Southern California

**Type:** DC
**Size:** 3
**Manual:** 9
**Approved:** 10-Apr-2001
**Shutoffs:** (ll),mm

**Manufacturer:** Apollo/Conbraco
**Orientation:** VUVD
**0.25% Pb:** No
**Renewed:** 10-Apr-2016

**Model:** 3DCU
**Meters:**
**Spare Parts Only:** Yes
**Bypass:**

---

**Type:** DC
**Size:** 3
**Manual:** 9
**Approved:** 10-Apr-2001
**Shutoffs:** (ll),mm

**Manufacturer:** Apollo/Conbraco
**Orientation:** VUVD
**0.25% Pb:** No
**Renewed:** 10-Apr-2016

**Model:** 3DCU
**Meters:**
**Spare Parts Only:** Yes
**Bypass:**

---

**Type:** DC
**Size:** 3
**Manual:** 8
**Approved:** 08-Apr-1991
**Shutoffs:** tt,bb,ee,ll

**Manufacturer:** Apollo/Conbraco
**Orientation:** H
**0.25% Pb:** No
**Renewed:** 08-Apr-2018

**Model:** 40-100-02
**Meters:**
**Spare Parts Only:** Yes
**Bypass:**

---

**Type:** DC
**Size:** 3
**Manual:** 8
**Approved:** 08-Apr-1991
**Shutoffs:** uu,cc,mm

**Manufacturer:** Apollo/Conbraco
**Orientation:** H
**0.25% Pb:** No
**Renewed:** 08-Apr-2018

**Model:** 40-100-03
**Meters:**
**Spare Parts Only:** Yes
**Bypass:**

---

**Type:** DC
**Size:** 3
**Manual:** 8
**Approved:** 08-Dec-1998
**Shutoffs:** mmm

**Manufacturer:** Apollo/Conbraco
**Orientation:** H
**0.25% Pb:** No
**Renewed:** 08-Dec-2016

**Model:** 40-100-05
**Meters:**
**Spare Parts Only:** Yes
**Bypass:**

---

**Type:** DC
**Size:** 1/2
**Manual:** 8
**Approved:** 01-May-1995
**Shutoffs:** dd

**Manufacturer:** Apollo/Conbraco
**Orientation:** H
**0.25% Pb:** No
**Renewed:** 01-May-2016

**Model:** 40-103-02
**Meters:**
**Spare Parts Only:** Yes
**Bypass:**

---

**Type:** DC
**Size:** 3/4
**Manual:** 8
**Approved:** 17-Mar-1989
**Shutoffs:** dd

**Manufacturer:** Apollo/Conbraco
**Orientation:** H
**0.25% Pb:** No
**Renewed:** 17-Mar-2016

**Model:** 40-104-02
**Meters:**
**Spare Parts Only:** Yes
**Bypass:**

**Type:** DC
**Manufacturer:** Apollo/Conbraco
**Model:** 40-104-99T
**Size:** 3/4
**Orientation:**
**Meters:**
**Manual:**
**0.25% Pb:** No
**Spare Parts Only:** No
**Approved:**
**Renewed:**
**Bypass:**
**Notes:** model designation changed to DC40

---

**Type:** DC
**Manufacturer:** Apollo/Conbraco
**Model:** 40-104-A2
**Size:** 3/4
**Orientation:** H
**Meters:**
**Manual:** 8
**0.25% Pb:** No
**Spare Parts Only:** Yes
**Approved:** 21-Jun-1993
**Renewed:** 21-Jun-2017
**Bypass:**
**Shutoffs:** dd

---

**Type:** DC
**Manufacturer:** Apollo/Conbraco
**Model:** 40-104-A2T
**Size:** 3/4
**Orientation:** H
**Meters:**
**Manual:** 8
**0.25% Pb:** No
**Spare Parts Only:** Yes
**Approved:** 25-Mar-1992
**Renewed:** 25-Mar-2016
**Bypass:**
**Shutoffs:** dd

---

**Type:** DC
**Manufacturer:** Apollo/Conbraco
**Model:** 40-104-T2
**Size:** 3/4
**Orientation:**
**Meters:**
**Manual:**
**0.25% Pb:** No
**Spare Parts Only:** No
**Approved:**
**Renewed:**
**Bypass:**
**Notes:** model designation changed to DC40

---

**Type:** DC
**Manufacturer:** Apollo/Conbraco
**Model:** 40-104-TC2
**Size:** 3/4
**Orientation:**
**Meters:**
**Manual:**
**0.25% Pb:** No
**Spare Parts Only:** No
**Approved:**
**Renewed:**
**Bypass:**
**Notes:** model designation changed to DC40

---

**Type:** DC
**Manufacturer:** Apollo/Conbraco
**Model:** 40-105-02
**Size:** 1
**Orientation:** H
**Meters:**
**Manual:** 8
**0.25% Pb:** No
**Spare Parts Only:** Yes
**Approved:** 17-Mar-1989
**Renewed:** 17-Mar-2016
**Bypass:**
**Shutoffs:** dd

---

**Type:** DC
**Manufacturer:** Apollo/Conbraco
**Model:** 40-105-99T
**Size:** 1
**Orientation:**
**Meters:**
**Manual:**
**0.25% Pb:** No
**Spare Parts Only:** No
**Approved:**
**Renewed:**
**Bypass:**
**Notes:** model designation changed to DC40


2018 © University of Southern California

**Type:** DC
**Manufacturer:** Apollo/Conbraco
**Model:** 40-105-A2
**Size:** 1
**Orientation:** H
**Meters:**
**Manual:** 8
**0.25% Pb:** No
**Spare Parts Only:** Yes
**Approved:** 21-Jun-1993
**Renewed:** 21-Jun-2017
**Bypass:**
**Shutoffs:** dd

---

**Type:** DC
**Manufacturer:** Apollo/Conbraco
**Model:** 40-105-A2T
**Size:** 1
**Orientation:** H
**Meters:**
**Manual:** 8
**0.25% Pb:** No
**Spare Parts Only:** Yes
**Approved:** 25-Mar-1992
**Renewed:** 25-Mar-2016
**Bypass:**
**Shutoffs:** dd

---

**Type:** DC
**Manufacturer:** Apollo/Conbraco
**Model:** 40-105-T2
**Size:** 1
**Orientation:**
**Meters:**
**Manual:**
**0.25% Pb:** No
**Spare Parts Only:** No
**Approved:**
**Renewed:**
**Bypass:**
**Notes:** model designation changed to DC40

---

**Type:** DC
**Manufacturer:** Apollo/Conbraco
**Model:** 40-105-TC2
**Size:** 1
**Orientation:**
**Meters:**
**Manual:**
**0.25% Pb:** No
**Spare Parts Only:** No
**Approved:**
**Renewed:**
**Bypass:**
**Notes:** model designation changed to DC40

---

**Type:** DC
**Manufacturer:** Apollo/Conbraco
**Model:** 40-106-02
**Size:** 1 1/4
**Orientation:** H
**Meters:**
**Manual:** 8
**0.25% Pb:** No
**Spare Parts Only:** Yes
**Approved:** 06-Apr-1992
**Renewed:** 06-Apr-2016
**Bypass:**
**Shutoffs:** dd

---

**Type:** DC
**Manufacturer:** Apollo/Conbraco
**Model:** 40-106-99T
**Size:** 1 1/4
**Orientation:**
**Meters:**
**Manual:**
**0.25% Pb:** No
**Spare Parts Only:** No
**Approved:**
**Renewed:**
**Bypass:**
**Notes:** model designation changed to DC40

---

**Type:** DC
**Manufacturer:** Apollo/Conbraco
**Model:** 40-106-A2
**Size:** 1 1/4
**Orientation:** H
**Meters:**
**Manual:** 8
**0.25% Pb:** No
**Spare Parts Only:** Yes
**Approved:** 21-Jun-1993
**Renewed:** 21-Jun-2017
**Bypass:**
**Shutoffs:** dd

**Type:** DC
**Manufacturer:** Apollo/Conbraco
**Model:** 40-106-A2T
**Size:** 1 1/4
**Orientation:** H
**Meters:**
**Manual:** 8
**0.25% Pb:** No
**Spare Parts Only:** Yes
**Approved:** 22-May-1993
**Renewed:** 22-May-2017
**Bypass:**
**Shutoffs:** dd

---

**Type:** DC
**Manufacturer:** Apollo/Conbraco
**Model:** 40-106-T2
**Size:** 1 1/4
**Orientation:**
**Meters:**
**Manual:**
**0.25% Pb:** No
**Spare Parts Only:** No
**Approved:**
**Renewed:**
**Bypass:**
**Notes:** model designation changed to DC40

---

**Type:** DC
**Manufacturer:** Apollo/Conbraco
**Model:** 40-107-02
**Size:** 1 1/2
**Orientation:** H
**Meters:**
**Manual:** 8
**0.25% Pb:** No
**Spare Parts Only:** Yes
**Approved:** 17-Mar-1989
**Renewed:** 17-Mar-2016
**Bypass:**
**Shutoffs:** dd

---

**Type:** DC
**Manufacturer:** Apollo/Conbraco
**Model:** 40-107-99T
**Size:** 1 1/2
**Orientation:**
**Meters:**
**Manual:**
**0.25% Pb:** No
**Spare Parts Only:** No
**Approved:**
**Renewed:**
**Bypass:**
**Notes:** model designation changed to DC40

---

**Type:** DC
**Manufacturer:** Apollo/Conbraco
**Model:** 40-107-A2
**Size:** 1 1/2
**Orientation:** H
**Meters:**
**Manual:** 8
**0.25% Pb:** No
**Spare Parts Only:** Yes
**Approved:** 22-May-1993
**Renewed:** 22-May-2017
**Bypass:**
**Shutoffs:** dd

---

**Type:** DC
**Manufacturer:** Apollo/Conbraco
**Model:** 40-107-A2T
**Size:** 1 1/2
**Orientation:** H
**Meters:**
**Manual:** 8
**0.25% Pb:** No
**Spare Parts Only:** Yes
**Approved:** 22-May-1993
**Renewed:** 22-May-2017
**Bypass:**
**Shutoffs:** dd

---

**Type:** DC
**Manufacturer:** Apollo/Conbraco
**Model:** 40-107-T2
**Size:** 1 1/2
**Orientation:**
**Meters:**
**Manual:**
**0.25% Pb:** No
**Spare Parts Only:** No
**Approved:**
**Renewed:**
**Bypass:**
**Notes:** model designation changed to DC40


2018 © University of Southern California

**Type:** DC
**Manufacturer:** Apollo/Conbraco
**Model:** 40-108-02
**Size:** 2
**Orientation:** H
**Meters:**
**Manual:** 8
**0.25% Pb:** No
**Spare Parts Only:** Yes
**Approved:** 17-Mar-1989
**Renewed:** 17-Mar-2016
**Bypass:**
**Shutoffs:** dd

---

**Type:** DC
**Manufacturer:** Apollo/Conbraco
**Model:** 40-108-99T
**Size:** 2
**Orientation:**
**Meters:**
**Manual:**
**0.25% Pb:** No
**Spare Parts Only:** No
**Approved:**
**Renewed:**
**Bypass:**
**Notes:** model designation changed to DC40

---

**Type:** DC
**Manufacturer:** Apollo/Conbraco
**Model:** 40-108-A2
**Size:** 2
**Orientation:** H
**Meters:**
**Manual:** 8
**0.25% Pb:** No
**Spare Parts Only:** Yes
**Approved:** 22-May-1993
**Renewed:** 22-May-2017
**Bypass:**
**Shutoffs:** dd

---

**Type:** DC
**Manufacturer:** Apollo/Conbraco
**Model:** 40-108-A2T
**Size:** 2
**Orientation:** H
**Meters:**
**Manual:** 8
**0.25% Pb:** No
**Spare Parts Only:** Yes
**Approved:** 22-May-1993
**Renewed:** 22-May-2017
**Bypass:**
**Shutoffs:** dd

---

**Type:** DC
**Manufacturer:** Apollo/Conbraco
**Model:** 40-108-T2
**Size:** 2
**Orientation:**
**Meters:**
**Manual:**
**0.25% Pb:** No
**Spare Parts Only:** No
**Approved:**
**Renewed:**
**Bypass:**
**Notes:** model designation changed to DC40

---

**Type:** DC
**Manufacturer:** Apollo/Conbraco
**Model:** 40-109-02
**Size:** 2 1/2
**Orientation:** H
**Meters:**
**Manual:** 8
**0.25% Pb:** No
**Spare Parts Only:** Yes
**Approved:** 08-Apr-1991
**Renewed:** 08-Apr-2018
**Bypass:**
**Shutoffs:** tt,bb,ee,ll

---

**Type:** DC
**Manufacturer:** Apollo/Conbraco
**Model:** 40-109-03
**Size:** 2 1/2
**Orientation:** H
**Meters:**
**Manual:** 8
**0.25% Pb:** No
**Spare Parts Only:** Yes
**Approved:** 08-Apr-1991
**Renewed:** 08-Apr-2018
**Bypass:**
**Shutoffs:** uu,cc,mm

**Type:** DC
**Size:** 2 1/2
**Manual:** 8
**Approved:** 08-Dec-1998
**Shutoffs:** mmm
**Manufacturer:** Apollo/Conbraco
**Orientation:** H
**0.25% Pb:** No
**Renewed:** 08-Dec-2016
**Model:** 40-109-05
**Meters:**
**Spare Parts Only:** Yes
**Bypass:**

---

**Type:** DC
**Size:** 4
**Manual:** 8
**Approved:** 08-Apr-1991
**Shutoffs:** tt,bb,ee,ll
**Manufacturer:** Apollo/Conbraco
**Orientation:** H
**0.25% Pb:** No
**Renewed:** 08-Apr-2018
**Model:** 40-10A-02
**Meters:**
**Spare Parts Only:** Yes
**Bypass:**

---

**Type:** DC
**Size:** 4
**Manual:** 8
**Approved:** 08-Apr-1991
**Shutoffs:** uu,cc,mm
**Manufacturer:** Apollo/Conbraco
**Orientation:** H
**0.25% Pb:** No
**Renewed:** 08-Apr-2018
**Model:** 40-10A-03
**Meters:**
**Spare Parts Only:** Yes
**Bypass:**

---

**Type:** DC
**Size:** 4
**Manual:** 8
**Approved:** 08-Dec-1998
**Shutoffs:** mmm
**Manufacturer:** Apollo/Conbraco
**Orientation:** H
**0.25% Pb:** No
**Renewed:** 08-Dec-2016
**Model:** 40-10A-05
**Meters:**
**Spare Parts Only:** Yes
**Bypass:**

---

**Type:** DC
**Size:** 4
**Manual:** 8
**Approved:** 01-Feb-2000
**Shutoffs:** mm[#1SOV], nnn[#2SOV]
**Manufacturer:** Apollo/Conbraco
**Orientation:** H
**0.25% Pb:** No
**Renewed:** 01-Feb-2018
**Model:** 40-10A-06
**Meters:**
**Spare Parts Only:** Yes
**Bypass:**

---

**Type:** DC
**Size:** 6
**Manual:** 8
**Approved:** 08-Apr-1991
**Shutoffs:** tt,bb,ee,ll
**Manufacturer:** Apollo/Conbraco
**Orientation:** H
**0.25% Pb:** No
**Renewed:** 08-Apr-2018
**Model:** 40-10C-02
**Meters:**
**Spare Parts Only:** Yes
**Bypass:**

---

**Type:** DC
**Size:** 6
**Manual:** 8
**Approved:** 08-Apr-1991
**Shutoffs:** uu,cc,mm
**Manufacturer:** Apollo/Conbraco
**Orientation:** H
**0.25% Pb:** No
**Renewed:** 08-Apr-2018
**Model:** 40-10C-03
**Meters:**
**Spare Parts Only:** Yes
**Bypass:**


2018 © University of Southern California

**Type:** DC
**Size:** 6
**Manual:** 8
**Approved:** 08-Dec-1998
**Shutoffs:** mmm
**Manufacturer:** Apollo/Conbraco
**Orientation:** H
**0.25% Pb:** No
**Renewed:** 08-Dec-2016
**Model:** 40-10C-05
**Meters:**
**Spare Parts Only:** Yes
**Bypass:**

---

**Type:** DC
**Size:** 6
**Manual:** 8
**Approved:** 01-Feb-2000
**Shutoffs:** mm[#1SOV], nnn[#2SOV]
**Manufacturer:** Apollo/Conbraco
**Orientation:** H
**0.25% Pb:** No
**Renewed:** 01-Feb-2018
**Model:** 40-10C-06
**Meters:**
**Spare Parts Only:** Yes
**Bypass:**

---

**Type:** DC
**Size:** 8
**Manual:** 8
**Approved:** 22-Oct-1991
**Shutoffs:** tt,bb,ee,ll
**Manufacturer:** Apollo/Conbraco
**Orientation:** H
**0.25% Pb:** No
**Renewed:** 22-Oct-2018
**Model:** 40-10E-02
**Meters:**
**Spare Parts Only:** Yes
**Bypass:**

---

**Type:** DC
**Size:** 8
**Manual:** 8
**Approved:** 22-Oct-1991
**Shutoffs:** uu,cc,mm
**Manufacturer:** Apollo/Conbraco
**Orientation:** H
**0.25% Pb:** No
**Renewed:** 22-Oct-2018
**Model:** 40-10E-03
**Meters:**
**Spare Parts Only:** Yes
**Bypass:**

---

**Type:** DC
**Size:** 8
**Manual:** 8
**Approved:** 01-Feb-2000
**Shutoffs:** mm[#1SOV], nnn[#2SOV]
**Manufacturer:** Apollo/Conbraco
**Orientation:** H
**0.25% Pb:** No
**Renewed:** 01-Feb-2018
**Model:** 40-10E-06
**Meters:**
**Spare Parts Only:** Yes
**Bypass:**

---

**Type:** DC
**Size:** 10
**Manual:** 8
**Approved:** 13-Apr-1993
**Shutoffs:** tt,bb,ee,ll
**Manufacturer:** Apollo/Conbraco
**Orientation:** H
**0.25% Pb:** No
**Renewed:** 13-Apr-2017
**Model:** 40-10G-02
**Meters:**
**Spare Parts Only:** Yes
**Bypass:**

---

**Type:** DC
**Size:** 10
**Manual:** 8
**Approved:** 13-Apr-1993
**Shutoffs:** uu,cc,mm
**Manufacturer:** Apollo/Conbraco
**Orientation:** H
**0.25% Pb:** No
**Renewed:** 13-Apr-2017
**Model:** 40-10G-03
**Meters:**
**Spare Parts Only:** Yes
**Bypass:**

**Type:** DC
**Size:** 10
**Manual:** 8
**Approved:** 01-Feb-2000
**Shutoffs:** mm[#1SOV], nnn[#2SOV]
**Manufacturer:** Apollo/Conbraco
**Orientation:** H
**0.25% Pb:** No
**Renewed:** 01-Feb-2018
**Model:** 40-10G-06
**Meters:**
**Spare Parts Only:** Yes
**Bypass:**

---

**Type:** DC
**Size:** 2 1/2
**Manual:** 9
**Approved:** 11-Mar-2012
**Shutoffs:** (yyy), cccc, dddd
**Manufacturer:** Apollo/Conbraco
**Orientation:** H
**0.25% Pb:** No
**Renewed:** 11-Mar-2018
**Model:** 4D-100
**Meters:**
**Spare Parts Only:** Yes
**Bypass:**

---

**Type:** DC
**Size:** 2 1/2
**Manual:** 9
**Approved:** 11-Mar-2009
**Shutoffs:** (yyy), cccc, dddd
**Manufacturer:** Apollo/Conbraco
**Orientation:** VU
**0.25% Pb:** No
**Renewed:** 11-Mar-2018
**Model:** 4D-100
**Meters:**
**Spare Parts Only:** Yes
**Bypass:**

---

**Type:** DC
**Size:** 3
**Manual:** 9
**Approved:** 11-Mar-2009
**Shutoffs:** (yyy), cccc, dddd
**Manufacturer:** Apollo/Conbraco
**Orientation:** H
**0.25% Pb:** No
**Renewed:** 11-Mar-2018
**Model:** 4D-100
**Meters:**
**Spare Parts Only:** Yes
**Bypass:**

---

**Type:** DC
**Size:** 3
**Manual:** 9
**Approved:** 11-Mar-2009
**Shutoffs:** (yyy), cccc, dddd
**Manufacturer:** Apollo/Conbraco
**Orientation:** VU
**0.25% Pb:** No
**Renewed:** 11-Mar-2018
**Model:** 4D-100
**Meters:**
**Spare Parts Only:** Yes
**Bypass:**

---

**Type:** DC
**Size:** 4
**Manual:** 9
**Approved:** 11-Mar-2009
**Shutoffs:** (yyy), cccc, dddd
**Manufacturer:** Apollo/Conbraco
**Orientation:** H
**0.25% Pb:** No
**Renewed:** 11-Mar-2018
**Model:** 4D-100
**Meters:**
**Spare Parts Only:** Yes
**Bypass:**

---

**Type:** DC
**Size:** 4
**Manual:** 9
**Approved:** 11-Mar-2009
**Shutoffs:** (yyy), cccc, dddd
**Manufacturer:** Apollo/Conbraco
**Orientation:** VU
**0.25% Pb:** No
**Renewed:** 11-Mar-2018
**Model:** 4D-100
**Meters:**
**Spare Parts Only:** Yes
**Bypass:**


2018 © University of Southern California

**Type:** DC
**Size:** 2 1/2
**Manual:** 9
**Approved:** 11-Mar-2009
**Shutoffs:** (yyy), cccc, dddd

**Manufacturer:** Apollo/Conbraco
**Orientation:** VUVD
**0.25% Pb:** No
**Renewed:** 11-Mar-2018

**Model:** 4D-100U
**Meters:**
**Spare Parts Only:** Yes
**Bypass:**

---

**Type:** DC
**Size:** 3
**Manual:** 9
**Approved:** 11-Mar-2009
**Shutoffs:** (yyy), cccc, dddd

**Manufacturer:** Apollo/Conbraco
**Orientation:** VUVD
**0.25% Pb:** No
**Renewed:** 11-Mar-2018

**Model:** 4D-100U
**Meters:**
**Spare Parts Only:** Yes
**Bypass:**

---

**Type:** DC
**Size:** 4
**Manual:** 9
**Approved:** 11-Mar-2009
**Shutoffs:** (yyy), cccc, dddd

**Manufacturer:** Apollo/Conbraco
**Orientation:** VUVD
**0.25% Pb:** No
**Renewed:** 11-Mar-2018

**Model:** 4D-100U
**Meters:**
**Spare Parts Only:** Yes
**Bypass:**

---

**Type:** DC
**Size:** 4
**Manual:** 9
**Approved:** 16-Oct-2000
**Shutoffs:** (ll),mm

**Manufacturer:** Apollo/Conbraco
**Orientation:** H
**0.25% Pb:** No
**Renewed:** 16-Oct-2018

**Model:** 4DC
**Meters:**
**Spare Parts Only:** Yes
**Bypass:**

---

**Type:** DC
**Size:** 4
**Manual:** 9
**Approved:** 16-Oct-2000
**Shutoffs:** (ll),mm

**Manufacturer:** Apollo/Conbraco
**Orientation:** VU
**0.25% Pb:** No
**Renewed:** 16-Oct-2018

**Model:** 4DC
**Meters:**
**Spare Parts Only:** Yes
**Bypass:**

---

**Type:** DC
**Size:** 4
**Manual:** 9
**Approved:** 23-Oct-2001
**Shutoffs:** (mm)[#1SOV], (qqq)[#2SOV]

**Manufacturer:** Apollo/Conbraco
**Orientation:** H
**0.25% Pb:** No
**Renewed:** 23-Oct-2016

**Model:** 4DC7
**Meters:**
**Spare Parts Only:** Yes
**Bypass:**

---

**Type:** DC
**Size:** 4
**Manual:** 9
**Approved:** 23-Oct-2001
**Shutoffs:** (mm)[#1SOV], (qqq)[#2SOV]

**Manufacturer:** Apollo/Conbraco
**Orientation:** VU
**0.25% Pb:** No
**Renewed:** 23-Oct-2016

**Model:** 4DC7
**Meters:**
**Spare Parts Only:** Yes
**Bypass:**

**Type:** DC
**Manufacturer:** Apollo/Conbraco
**Model:** 4DC8
**Size:** 4
**Orientation:** H
**Meters:**
**Manual:** 9
**0.25% Pb:** No
**Spare Parts Only:** Yes
**Approved:** 29-Sep-2004
**Renewed:** 29-Sep-2016
**Bypass:**
**Shutoffs:** (ppp),qqq

---

**Type:** DC
**Manufacturer:** Apollo/Conbraco
**Model:** 4DC8
**Size:** 4
**Orientation:** VU
**Meters:**
**Manual:** 9
**0.25% Pb:** No
**Spare Parts Only:** Yes
**Approved:** 29-Sep-2004
**Renewed:** 29-Sep-2016
**Bypass:**
**Shutoffs:** (ppp),qqq

---

**Type:** DC
**Manufacturer:** Apollo/Conbraco
**Model:** 4DCU
**Size:** 4
**Orientation:** VUVD
**Meters:**
**Manual:** 9
**0.25% Pb:** No
**Spare Parts Only:** Yes
**Approved:** 10-Apr-2001
**Renewed:** 10-Apr-2016
**Bypass:**
**Shutoffs:** (ll),mm

---

**Type:** DC
**Manufacturer:** Apollo/Conbraco
**Model:** 4S103
**Size:** 1/2
**Orientation:**
**Meters:**
**Manual:**
**0.25% Pb:** No
**Spare Parts Only:** No
**Approved:**
**Renewed:**
**Bypass:**
**Notes:** model designation changed to W432100

---

**Type:** DC
**Manufacturer:** Apollo/Conbraco
**Model:** 4S103
**Size:** 1/2
**Orientation:**
**Meters:**
**Manual:**
**0.25% Pb:** No
**Spare Parts Only:** No
**Approved:**
**Renewed:**
**Bypass:**
**Notes:** model designation changed to W432100

---

**Type:** DC
**Manufacturer:** Apollo/Conbraco
**Model:** 4SG-100
**Size:** 2 1/2
**Orientation:**
**Meters:**
**Manual:**
**0.25% Pb:** No
**Spare Parts Only:** No
**Approved:**
**Renewed:**
**Bypass:**
**Notes:** model designation changed to DC4SG

---

**Type:** DC
**Manufacturer:** Apollo/Conbraco
**Model:** 4SG-100
**Size:** 2 1/2
**Orientation:**
**Meters:**
**Manual:**
**0.25% Pb:** No
**Spare Parts Only:** No
**Approved:**
**Renewed:**
**Bypass:**
**Notes:** model designation changed to DC4SG


2018 © University of Southern California

**Type:** DC
**Manufacturer:** Apollo/Conbraco
**Model:** 4SG-100
**Size:** 3
**Orientation:**
**Meters:**
**Manual:**
**0.25% Pb:** No
**Spare Parts Only:** No
**Approved:**
**Renewed:**
**Bypass:**
**Notes:** model designation changed to DC4SG

---

**Type:** DC
**Manufacturer:** Apollo/Conbraco
**Model:** 4SG-100
**Size:** 3
**Orientation:**
**Meters:**
**Manual:**
**0.25% Pb:** No
**Spare Parts Only:** No
**Approved:**
**Renewed:**
**Bypass:**
**Notes:** model designation changed to DC4SG

---

**Type:** DC
**Manufacturer:** Apollo/Conbraco
**Model:** 4SG-100
**Size:** 4
**Orientation:**
**Meters:**
**Manual:**
**0.25% Pb:** No
**Spare Parts Only:** No
**Approved:**
**Renewed:**
**Bypass:**
**Notes:** model designation changed to DC4SG

---

**Type:** DC
**Manufacturer:** Apollo/Conbraco
**Model:** 4SG-100
**Size:** 4
**Orientation:**
**Meters:**
**Manual:**
**0.25% Pb:** No
**Spare Parts Only:** No
**Approved:**
**Renewed:**
**Bypass:**
**Notes:** model designation changed to DC4SG

---

**Type:** DC
**Manufacturer:** Apollo/Conbraco
**Model:** 4SG-100
**Size:** 6
**Orientation:**
**Meters:**
**Manual:**
**0.25% Pb:** No
**Spare Parts Only:** No
**Approved:**
**Renewed:**
**Bypass:**
**Notes:** model designation changed to DC4SG

---

**Type:** DC
**Manufacturer:** Apollo/Conbraco
**Model:** 4SG-100
**Size:** 6
**Orientation:**
**Meters:**
**Manual:**
**0.25% Pb:** No
**Spare Parts Only:** No
**Approved:**
**Renewed:**
**Bypass:**
**Notes:** model designation changed to DC4SG

---

**Type:** DC
**Manufacturer:** Apollo/Conbraco
**Model:** 4SG-100
**Size:** 8
**Orientation:**
**Meters:**
**Manual:**
**0.25% Pb:** No
**Spare Parts Only:** No
**Approved:**
**Renewed:**
**Bypass:**
**Notes:** model designation changed to DC4SG

**Type:** DC
**Manufacturer:** Apollo/Conbraco
**Model:** 4SG-100
**Size:** 8
**Orientation:**
**Meters:**
**Manual:**
**0.25% Pb:** No
**Spare Parts Only:** No
**Approved:**
**Renewed:**
**Bypass:**
**Notes:** model designation changed to DC4SG

---

**Type:** DC
**Manufacturer:** Apollo/Conbraco
**Model:** 4SG-100U
**Size:** 2 1/2
**Orientation:**
**Meters:**
**Manual:**
**0.25% Pb:** No
**Spare Parts Only:** No
**Approved:**
**Renewed:**
**Bypass:**
**Notes:** model designation changed to DC4SGN

---

**Type:** DC
**Manufacturer:** Apollo/Conbraco
**Model:** 4SG-100U
**Size:** 3
**Orientation:**
**Meters:**
**Manual:**
**0.25% Pb:** No
**Spare Parts Only:** No
**Approved:**
**Renewed:**
**Bypass:**
**Notes:** model designation changed to DC4SGN

---

**Type:** DC
**Manufacturer:** Apollo/Conbraco
**Model:** 4SG-100U
**Size:** 4
**Orientation:**
**Meters:**
**Manual:**
**0.25% Pb:** No
**Spare Parts Only:** No
**Approved:**
**Renewed:**
**Bypass:**
**Notes:** model designation changed to DC4SGN

---

**Type:** DC
**Manufacturer:** Apollo/Conbraco
**Model:** 4SG-100U
**Size:** 6
**Orientation:**
**Meters:**
**Manual:**
**0.25% Pb:** No
**Spare Parts Only:** No
**Approved:**
**Renewed:**
**Bypass:**
**Notes:** model designation changed to DC4SGN

---

**Type:** DC
**Manufacturer:** Apollo/Conbraco
**Model:** 4SG-100U
**Size:** 8
**Orientation:**
**Meters:**
**Manual:**
**0.25% Pb:** No
**Spare Parts Only:** No
**Approved:**
**Renewed:**
**Bypass:**
**Notes:** model designation changed to DC4SGN

---

**Type:** DC
**Manufacturer:** Apollo/Conbraco
**Model:** 6DC
**Size:** 6
**Orientation:** H
**Meters:**
**Manual:** 9
**0.25% Pb:** No
**Spare Parts Only:** Yes
**Approved:** 16-Oct-2000
**Renewed:** 16-Oct-2018
**Bypass:**
**Shutoffs:** (ll),mm


2018 © University of Southern California

**Type:** DC
**Size:** 6
**Manual:** 9
**Approved:** 16-Oct-2000
**Shutoffs:** (ll),mm

**Manufacturer:** Apollo/Conbraco
**Orientation:** VU
**0.25% Pb:** No
**Renewed:** 16-Oct-2018

**Model:** 6DC
**Meters:**
**Spare Parts Only:** Yes
**Bypass:**

---

**Type:** DC
**Size:** 6
**Manual:** 9
**Approved:** 23-Oct-2001
**Shutoffs:** (mm)[#1SOV], (qqq)[#2SOV]

**Manufacturer:** Apollo/Conbraco
**Orientation:** H
**0.25% Pb:** No
**Renewed:** 23-Oct-2016

**Model:** 6DC7
**Meters:**
**Spare Parts Only:** Yes
**Bypass:**

---

**Type:** DC
**Size:** 6
**Manual:** 9
**Approved:** 23-Oct-2001
**Shutoffs:** (mm)[#1SOV], (qqq)[#2SOV]

**Manufacturer:** Apollo/Conbraco
**Orientation:** VU
**0.25% Pb:** No
**Renewed:** 23-Oct-2016

**Model:** 6DC7
**Meters:**
**Spare Parts Only:** Yes
**Bypass:**

---

**Type:** DC
**Size:** 6
**Manual:** 9
**Approved:** 29-Sep-2004
**Shutoffs:** (ppp),qqq

**Manufacturer:** Apollo/Conbraco
**Orientation:** H
**0.25% Pb:** No
**Renewed:** 29-Sep-2016

**Model:** 6DC8
**Meters:**
**Spare Parts Only:** Yes
**Bypass:**

---

**Type:** DC
**Size:** 6
**Manual:** 9
**Approved:** 29-Sep-2004
**Shutoffs:** (ppp),qqq

**Manufacturer:** Apollo/Conbraco
**Orientation:** VU
**0.25% Pb:** No
**Renewed:** 29-Sep-2016

**Model:** 6DC8
**Meters:**
**Spare Parts Only:** Yes
**Bypass:**

---

**Type:** DC
**Size:** 6
**Manual:** 9
**Approved:** 10-Apr-2001
**Shutoffs:** (ll),mm

**Manufacturer:** Apollo/Conbraco
**Orientation:** VUVD
**0.25% Pb:** No
**Renewed:** 10-Apr-2016

**Model:** 6DCU
**Meters:**
**Spare Parts Only:** Yes
**Bypass:**

---

**Type:** DC
**Size:** 8
**Manual:** 9
**Approved:** 16-Jan-2003
**Shutoffs:** (mm),ll

**Manufacturer:** Apollo/Conbraco
**Orientation:** H
**0.25% Pb:** No
**Renewed:** 16-Jan-2018

**Model:** 8DC
**Meters:**
**Spare Parts Only:** Yes
**Bypass:**

**Type:** DC
**Manufacturer:** Apollo/Conbraco
**Model:** 8DC
**Size:** 8
**Orientation:** VU
**Meters:**
**Manual:** 9
**0.25% Pb:** No
**Spare Parts Only:** Yes
**Approved:** 16-Jan-2003
**Renewed:** 16-Jan-2018
**Bypass:**
**Shutoffs:** (mm),ll

---

**Type:** DC
**Manufacturer:** Apollo/Conbraco
**Model:** 8DC8
**Size:** 8
**Orientation:** H
**Meters:**
**Manual:** 9
**0.25% Pb:** No
**Spare Parts Only:** Yes
**Approved:** 29-Sep-2004
**Renewed:** 29-Sep-2016
**Bypass:**
**Shutoffs:** (ppp),qqq

---

**Type:** DC
**Manufacturer:** Apollo/Conbraco
**Model:** 8DC8
**Size:** 8
**Orientation:** VU
**Meters:**
**Manual:** 9
**0.25% Pb:** No
**Spare Parts Only:** Yes
**Approved:** 29-Sep-2004
**Renewed:** 29-Sep-2016
**Bypass:**
**Shutoffs:** (ppp),qqq

---

**Type:** DC
**Manufacturer:** Apollo/Conbraco
**Model:** DC40
**Size:** 3/4
**Orientation:** H
**Meters:**
**Manual:** 8
**0.25% Pb:** No
**Spare Parts Only:** Yes
**Approved:** 27-Jun-1996
**Renewed:** 27-Jun-2017
**Bypass:**
**Shutoffs:** (dd)
**Notes:** formerly 40-104-99T, 40-104-T2, 40-104-TC2

---

**Type:** DC
**Manufacturer:** Apollo/Conbraco
**Model:** DC40
**Size:** 1
**Orientation:** H
**Meters:**
**Manual:** 8
**0.25% Pb:** No
**Spare Parts Only:** Yes
**Approved:** 27-Jun-1996
**Renewed:** 27-Jun-2017
**Bypass:**
**Shutoffs:** (dd)
**Notes:** formerly 40-105-99T, 40-105-T2, 40-105-TC2

---

**Type:** DC
**Manufacturer:** Apollo/Conbraco
**Model:** DC40
**Size:** 1 1/4
**Orientation:** H
**Meters:**
**Manual:** 8
**0.25% Pb:** No
**Spare Parts Only:** Yes
**Approved:** 09-Oct-1996
**Renewed:** 09-Oct-2017
**Bypass:**
**Shutoffs:** (dd)
**Notes:** formerly 40-106-99T, 40-106-T2


2018 © University of Southern California

**Type:** DC
**Manufacturer:** Apollo/Conbraco
**Model:** DC40
**Size:** 1 1/2
**Orientation:** H
**Meters:**
**Manual:** 8
**0.25% Pb:** No
**Spare Parts Only:** Yes
**Approved:** 09-Oct-1996
**Renewed:** 09-Oct-2017
**Bypass:**
**Shutoffs:** (dd)
**Notes:** formerly 40-107-99T, 40-107-T2

---

**Type:** DC
**Manufacturer:** Apollo/Conbraco
**Model:** DC40
**Size:** 2
**Orientation:** H
**Meters:**
**Manual:** 8
**0.25% Pb:** No
**Spare Parts Only:** Yes
**Approved:** 09-Oct-1996
**Renewed:** 09-Oct-2017
**Bypass:**
**Shutoffs:** (dd)
**Notes:** formerly 40-108-99T, 40-108-T2

---

**Type:** DC
**Manufacturer:** Apollo/Conbraco
**Model:** DC4A
**Size:** 1/2
**Orientation:** H
**Meters:**
**Manual:** 9
**0.25% Pb:** No
**Spare Parts Only:** No
**Approved:** 27-Apr-2011
**Renewed:** 27-Apr-2017
**Bypass:**
**Shutoffs:** (iiiii),sssss

---

**Type:** DC
**Manufacturer:** Apollo/Conbraco
**Model:** DC4A
**Size:** 1/2
**Orientation:** VU
**Meters:**
**Manual:** 9
**0.25% Pb:** No
**Spare Parts Only:** No
**Approved:** 27-Apr-2011
**Renewed:** 27-Apr-2017
**Bypass:**
**Shutoffs:** (iiiii),sssss

---

**Type:** DC
**Manufacturer:** Apollo/Conbraco
**Model:** DC4A
**Size:** 3/4
**Orientation:** H
**Meters:**
**Manual:** 9
**0.25% Pb:** No
**Spare Parts Only:** No
**Approved:** 27-Apr-2011
**Renewed:** 27-Apr-2017
**Bypass:**
**Shutoffs:** (iiiii),sssss

---

**Type:** DC
**Manufacturer:** Apollo/Conbraco
**Model:** DC4A
**Size:** 3/4
**Orientation:** VU
**Meters:**
**Manual:** 9
**0.25% Pb:** No
**Spare Parts Only:** No
**Approved:** 06-Apr-2011
**Renewed:** 06-Apr-2017
**Bypass:**
**Shutoffs:** (iiiii),sssss

**Type:** DC
**Manufacturer:** Apollo/Conbraco
**Model:** DC4A
**Size:** 1
**Orientation:** H
**Meters:**
**Manual:** 9
**0.25% Pb:** No
**Spare Parts Only:** No
**Approved:** 27-Sep-2011
**Renewed:** 27-Sep-2017
**Bypass:**
**Shutoffs:** (iiiii),sssss,wwwww

---

**Type:** DC
**Manufacturer:** Apollo/Conbraco
**Model:** DC4A
**Size:** 1
**Orientation:** VU
**Meters:**
**Manual:** 9
**0.25% Pb:** No
**Spare Parts Only:** No
**Approved:** 06-Apr-2011
**Renewed:** 06-Apr-2017
**Bypass:**
**Shutoffs:** (iiiii),sssss,wwwww

---

**Type:** DC
**Manufacturer:** Apollo/Conbraco
**Model:** DC4A
**Size:** 1 1/4
**Orientation:** H
**Meters:**
**Manual:** 9
**0.25% Pb:** No
**Spare Parts Only:** No
**Approved:** 07-Feb-2012
**Renewed:** 07-Feb-2018
**Bypass:**
**Shutoffs:** (iiiii),sssss,wwwww

---

**Type:** DC
**Manufacturer:** Apollo/Conbraco
**Model:** DC4A
**Size:** 1 1/4
**Orientation:** VU
**Meters:**
**Manual:** 9
**0.25% Pb:** No
**Spare Parts Only:** No
**Approved:** 07-Feb-2012
**Renewed:** 07-Feb-2018
**Bypass:**
**Shutoffs:** (iiiii),sssss,wwwww

---

**Type:** DC
**Manufacturer:** Apollo/Conbraco
**Model:** DC4A
**Size:** 1 1/2
**Orientation:** H
**Meters:**
**Manual:** 9
**0.25% Pb:** No
**Spare Parts Only:** No
**Approved:** 07-Feb-2012
**Renewed:** 07-Feb-2018
**Bypass:**
**Shutoffs:** (iiiii),sssss,wwwww

---

**Type:** DC
**Manufacturer:** Apollo/Conbraco
**Model:** DC4A
**Size:** 1 1/2
**Orientation:** VU
**Meters:**
**Manual:** 9
**0.25% Pb:** No
**Spare Parts Only:** No
**Approved:** 07-Feb-2012
**Renewed:** 07-Feb-2018
**Bypass:**
**Shutoffs:** (iiiii),sssss,wwwww

---

**Type:** DC
**Manufacturer:** Apollo/Conbraco
**Model:** DC4A
**Size:** 2
**Orientation:** H
**Meters:**
**Manual:** 9
**0.25% Pb:** No
**Spare Parts Only:** No
**Approved:** 07-Feb-2012
**Renewed:** 07-Feb-2018
**Bypass:**
**Shutoffs:** (iiiii),sssss,wwwww


2018 © University of Southern California

**Type:** DC
**Manufacturer:** Apollo/Conbraco
**Model:** DC4A
**Size:** 2
**Orientation:** VU
**Meters:**
**Manual:** 9
**0.25% Pb:** No
**Spare Parts Only:** No
**Approved:** 27-Mar-2012
**Renewed:** 27-Mar-2018
**Bypass:**
**Shutoffs:** (iiiii),sssss,wwwww

---

**Type:** DC
**Manufacturer:** Apollo/Conbraco
**Model:** DC4AY
**Size:** 3/4
**Orientation:** VU
**Meters:**
**Manual:** 10
**0.25% Pb:** No
**Spare Parts Only:** No
**Approved:** 24-Oct-2018
**Renewed:**
**Bypass:**
**Shutoffs:** (sssss)

---

**Type:** DC
**Manufacturer:** Apollo/Conbraco
**Model:** DC4AY
**Size:** 1
**Orientation:** VU
**Meters:**
**Manual:** 10
**0.25% Pb:** No
**Spare Parts Only:** No
**Approved:** 24-Oct-2018
**Renewed:**
**Bypass:**
**Shutoffs:** (sssss)

---

**Type:** DC
**Manufacturer:** Apollo/Conbraco
**Model:** DC4S
**Size:** 1/2
**Orientation:** H
**Meters:**
**Manual:** 9
**0.25% Pb:** No
**Spare Parts Only:** Yes
**Approved:** 18-Sep-2000
**Renewed:** 18-Sep-2018
**Bypass:**
**Shutoffs:** (dd)
**Notes:** formerly 1/2DC

---

**Type:** DC
**Manufacturer:** Apollo/Conbraco
**Model:** DC4S
**Size:** 1/2
**Orientation:** VU
**Meters:**
**Manual:** 9
**0.25% Pb:** No
**Spare Parts Only:** Yes
**Approved:** 18-Sep-2000
**Renewed:** 18-Sep-2018
**Bypass:**
**Shutoffs:** (dd)
**Notes:** formerly 1/2DC

---

**Type:** DC
**Manufacturer:** Apollo/Conbraco
**Model:** DC4S
**Size:** 10
**Orientation:** H
**Meters:**
**Manual:** 9
**0.25% Pb:** No
**Spare Parts Only:** No
**Approved:** 16-Jan-2003
**Renewed:** 16-Jan-2018
**Bypass:**
**Shutoffs:** (mm),ll, xxxxx, zzzzz, bbbbbb, cccccc
**Notes:** formerly 10DC

**Type:** DC
**Manufacturer:** Apollo/Conbraco
**Model:** DC4S
**Size:** 10
**Orientation:** VU
**Meters:**
**Manual:** 9
**0.25% Pb:** No
**Spare Parts Only:** No
**Approved:** 16-Jan-2003
**Renewed:** 16-Jan-2018
**Bypass:**
**Shutoffs:** (mm),ll, xxxxx, zzzzz, bbbbbb, cccccc
**Notes:** formerly 10DC

---

**Type:** DC
**Manufacturer:** Apollo/Conbraco
**Model:** DC4SG
**Size:** 2 1/2
**Orientation:** H
**Meters:**
**Manual:** 9
**0.25% Pb:** No
**Spare Parts Only:** Yes
**Approved:** 18-Oct-2007
**Renewed:** 18-Oct-2016
**Bypass:**
**Shutoffs:** (yyy)ppp,qqq,ttt
**Notes:** formerly 4SG-100

---

**Type:** DC
**Manufacturer:** Apollo/Conbraco
**Model:** DC4SG
**Size:** 2 1/2
**Orientation:** VU
**Meters:**
**Manual:** 9
**0.25% Pb:** No
**Spare Parts Only:** Yes
**Approved:** 18-Oct-2007
**Renewed:** 18-Oct-2016
**Bypass:**
**Shutoffs:** (yyy)ppp,qqq,ttt
**Notes:** formerly 4SG-100

---

**Type:** DC
**Manufacturer:** Apollo/Conbraco
**Model:** DC4SG
**Size:** 3
**Orientation:** H
**Meters:**
**Manual:** 9
**0.25% Pb:** No
**Spare Parts Only:** Yes
**Approved:** 25-Sep-2007
**Renewed:** 25-Sep-2016
**Bypass:**
**Shutoffs:** (yyy)ppp,qqq,ttt
**Notes:** formerly 4SG-100

---

**Type:** DC
**Manufacturer:** Apollo/Conbraco
**Model:** DC4SG
**Size:** 3
**Orientation:** VU
**Meters:**
**Manual:** 9
**0.25% Pb:** No
**Spare Parts Only:** Yes
**Approved:** 25-Sep-2007
**Renewed:** 25-Sep-2016
**Bypass:**
**Shutoffs:** (yyy)ppp,qqq,ttt
**Notes:** formerly 4SG-100

---

**Type:** DC
**Manufacturer:** Apollo/Conbraco
**Model:** DC4SG
**Size:** 4
**Orientation:** H
**Meters:**
**Manual:** 9
**0.25% Pb:** No
**Spare Parts Only:** Yes
**Approved:** 25-Sep-2007
**Renewed:** 25-Sep-2016
**Bypass:**
**Shutoffs:** (yyy)ppp,qqq,ttt
**Notes:** formerly 4SG-100


2018 © University of Southern California

**Type:** DC
**Manufacturer:** Apollo/Conbraco
**Model:** DC4SG
**Size:** 4
**Orientation:** VU
**Meters:**
**Manual:** 9
**0.25% Pb:** No
**Spare Parts Only:** Yes
**Approved:** 25-Sep-2007
**Renewed:** 25-Sep-2016
**Bypass:**
**Shutoffs:** (yyy)ppp,qqq,ttt
**Notes:** formerly 4SG-100

---

**Type:** DC
**Manufacturer:** Apollo/Conbraco
**Model:** DC4SG
**Size:** 6
**Orientation:** H
**Meters:**
**Manual:** 9
**0.25% Pb:** No
**Spare Parts Only:** Yes
**Approved:** 25-Sep-2007
**Renewed:** 25-Sep-2016
**Bypass:**
**Shutoffs:** (yyy)ppp,qqq,ttt
**Notes:** formerly 4SG-100

---

**Type:** DC
**Manufacturer:** Apollo/Conbraco
**Model:** DC4SG
**Size:** 6
**Orientation:** VU
**Meters:**
**Manual:** 9
**0.25% Pb:** No
**Spare Parts Only:** Yes
**Approved:** 25-Sep-2007
**Renewed:** 25-Sep-2016
**Bypass:**
**Shutoffs:** (yyy)ppp,qqq,ttt
**Notes:** formerly 4SG-100

---

**Type:** DC
**Manufacturer:** Apollo/Conbraco
**Model:** DC4SG
**Size:** 8
**Orientation:** H
**Meters:**
**Manual:** 9
**0.25% Pb:** No
**Spare Parts Only:** No
**Approved:** 25-Sep-2007
**Renewed:** 25-Sep-2016
**Bypass:**
**Shutoffs:** (yyy)ppp,qqq,ttt, xxxxx, yyyyy, zzzzz, aaaaaa
**Notes:** formerly 4SG-100

---

**Type:** DC
**Manufacturer:** Apollo/Conbraco
**Model:** DC4SG
**Size:** 8
**Orientation:** VU
**Meters:**
**Manual:** 9
**0.25% Pb:** No
**Spare Parts Only:** No
**Approved:** 25-Sep-2007
**Renewed:** 25-Sep-2016
**Bypass:**
**Shutoffs:** (yyy)ppp,qqq,ttt, xxxxx, yyyyy, zzzzz, aaaaaa
**Notes:** formerly 4SG-100

---

**Type:** DC
**Manufacturer:** Apollo/Conbraco
**Model:** DC4SGN
**Size:** 2 1/2
**Orientation:** VUVD
**Meters:**
**Manual:** 9
**0.25% Pb:** No
**Spare Parts Only:** Yes
**Approved:** 18-Oct-2007
**Renewed:** 18-Oct-2016
**Bypass:**
**Shutoffs:** (yyy)ppp,qqq,ttt
**Notes:** formerly 4SG-100U

**Type:** DC
**Size:** 3
**Manual:** 9
**Approved:** 18-Oct-2007
**Shutoffs:** (yyy)ppp,qqq,ttt
**Notes:** formerly 4SG-100U

**Manufacturer:** Apollo/Conbraco
**Orientation:** VUVD
**0.25% Pb:** No
**Renewed:** 18-Oct-2016

**Model:** DC4SGN
**Meters:**
**Spare Parts Only:** Yes
**Bypass:**

---

**Type:** DC
**Size:** 4
**Manual:** 9
**Approved:** 18-Oct-2007
**Shutoffs:** (yyy)ppp,qqq,ttt
**Notes:** formerly 4SG-100U

**Manufacturer:** Apollo/Conbraco
**Orientation:** VUVD
**0.25% Pb:** No
**Renewed:** 18-Oct-2016

**Model:** DC4SGN
**Meters:**
**Spare Parts Only:** Yes
**Bypass:**

---

**Type:** DC
**Size:** 6
**Manual:** 9
**Approved:** 25-Sep-2007
**Shutoffs:** (yyy)ppp,qqq,ttt
**Notes:** formerly 4SG-100U

**Manufacturer:** Apollo/Conbraco
**Orientation:** VUVD
**0.25% Pb:** No
**Renewed:** 25-Sep-2016

**Model:** DC4SGN
**Meters:**
**Spare Parts Only:** Yes
**Bypass:**

---

**Type:** DC
**Size:** 8
**Manual:** 9
**Approved:** 25-Sep-2007
**Shutoffs:** (yyy)ppp,qqq,ttt
**Notes:** formerly 4SG-100U

**Manufacturer:** Apollo/Conbraco
**Orientation:** VUVD
**0.25% Pb:** No
**Renewed:** 25-Sep-2016

**Model:** DC4SGN
**Meters:**
**Spare Parts Only:** No
**Bypass:**

---

**Type:** DC
**Size:** 1/2
**Manual:** 10
**Approved:** 27-Apr-2011
**Shutoffs:** (jjjjj),ttttt, uuuuu

**Manufacturer:** Apollo/Conbraco
**Orientation:** H
**0.25% Pb:** Yes
**Renewed:** 27-Apr-2017

**Model:** DCLF4A
**Meters:**
**Spare Parts Only:** No
**Bypass:**

---

**Type:** DC
**Size:** 1/2
**Manual:** 10
**Approved:** 27-Apr-2011
**Shutoffs:** (jjjjj),ttttt, uuuuu

**Manufacturer:** Apollo/Conbraco
**Orientation:** VU
**0.25% Pb:** Yes
**Renewed:** 27-Apr-2017

**Model:** DCLF4A
**Meters:**
**Spare Parts Only:** No
**Bypass:**


2018 © University of Southern California

**Type:** DC
**Size:** 3/4
**Manual:** 9
**Approved:** 27-Apr-2011
**Shutoffs:** (jjjjj),ttttt

**Manufacturer:** Apollo/Conbraco
**Orientation:** H
**0.25% Pb:** Yes
**Renewed:** 27-Apr-2017

**Model:** DCLF4A
**Meters:**
**Spare Parts Only:** No
**Bypass:**

---

**Type:** DC
**Size:** 3/4
**Manual:** 9
**Approved:** 06-Apr-2011
**Shutoffs:** (jjjjj),ttttt

**Manufacturer:** Apollo/Conbraco
**Orientation:** VU
**0.25% Pb:** Yes
**Renewed:** 06-Apr-2017

**Model:** DCLF4A
**Meters:**
**Spare Parts Only:** No
**Bypass:**

---

**Type:** DC
**Size:** 1
**Manual:** 9
**Approved:** 27-Sep-2011
**Shutoffs:** (jjjjj),ttttt,vvvvv

**Manufacturer:** Apollo/Conbraco
**Orientation:** H
**0.25% Pb:** Yes
**Renewed:** 27-Sep-2017

**Model:** DCLF4A
**Meters:**
**Spare Parts Only:** No
**Bypass:**

---

**Type:** DC
**Size:** 1
**Manual:** 9
**Approved:** 06-Apr-2011
**Shutoffs:** (jjjjj),ttttt,vvvvv

**Manufacturer:** Apollo/Conbraco
**Orientation:** VU
**0.25% Pb:** Yes
**Renewed:** 06-Apr-2017

**Model:** DCLF4A
**Meters:**
**Spare Parts Only:** No
**Bypass:**

---

**Type:** DC
**Size:** 1 1/4
**Manual:** 9
**Approved:** 07-Feb-2012
**Shutoffs:** (jjjjj),ttttt,vvvvv

**Manufacturer:** Apollo/Conbraco
**Orientation:** H
**0.25% Pb:** Yes
**Renewed:** 07-Feb-2018

**Model:** DCLF4A
**Meters:**
**Spare Parts Only:** No
**Bypass:**

---

**Type:** DC
**Size:** 1 1/4
**Manual:** 9
**Approved:** 07-Feb-2012
**Shutoffs:** (jjjjj),ttttt,vvvvv

**Manufacturer:** Apollo/Conbraco
**Orientation:** VU
**0.25% Pb:** Yes
**Renewed:** 07-Feb-2018

**Model:** DCLF4A
**Meters:**
**Spare Parts Only:** No
**Bypass:**

---

**Type:** DC
**Size:** 1 1/2
**Manual:** 9
**Approved:** 07-Feb-2012
**Shutoffs:** (jjjjj),ttttt,vvvvv

**Manufacturer:** Apollo/Conbraco
**Orientation:** H
**0.25% Pb:** Yes
**Renewed:** 07-Feb-2018

**Model:** DCLF4A
**Meters:**
**Spare Parts Only:** No
**Bypass:**

**Type:** DC
**Manufacturer:** Apollo/Conbraco
**Model:** DCLF4A
**Size:** 1 1/2
**Orientation:** VU
**Meters:**
**Manual:** 9
**0.25% Pb:** Yes
**Spare Parts Only:** No
**Approved:** 07-Feb-2012
**Renewed:** 07-Feb-2018
**Bypass:**
**Shutoffs:** (jjjjj),ttttt,vvvvv

---

**Type:** DC
**Manufacturer:** Apollo/Conbraco
**Model:** DCLF4A
**Size:** 2
**Orientation:** H
**Meters:**
**Manual:** 9
**0.25% Pb:** Yes
**Spare Parts Only:** No
**Approved:** 07-Feb-2012
**Renewed:** 07-Feb-2018
**Bypass:**
**Shutoffs:** (jjjjj),ttttt,vvvvv

---

**Type:** DC
**Manufacturer:** Apollo/Conbraco
**Model:** DCLF4A
**Size:** 2
**Orientation:** VU
**Meters:**
**Manual:** 9
**0.25% Pb:** Yes
**Spare Parts Only:** No
**Approved:** 27-Mar-2012
**Renewed:** 27-Mar-2018
**Bypass:**
**Shutoffs:** (jjjjj),ttttt,vvvvv

---

**Type:** DC
**Manufacturer:** Apollo/Conbraco
**Model:** DCLF4A
**Size:** 2 1/2
**Orientation:** H
**Meters:**
**Manual:** 10
**0.25% Pb:** Yes
**Spare Parts Only:** No
**Approved:** 05-Nov-2013
**Renewed:** 05-Nov-2016
**Bypass:**
**Shutoffs:** (yyy), cccc, dddd, mmmm, nnnn, xxxxx, yyyyy, zzzzz, aaaaaa

---

**Type:** DC
**Manufacturer:** Apollo/Conbraco
**Model:** DCLF4A
**Size:** 2 1/2
**Orientation:** VU
**Meters:**
**Manual:** 10
**0.25% Pb:** Yes
**Spare Parts Only:** No
**Approved:** 05-Nov-2013
**Renewed:** 05-Nov-2016
**Bypass:**
**Shutoffs:** (yyy), cccc, dddd, mmmm, nnnn, xxxxx, yyyyy, zzzzz, aaaaaa

---

**Type:** DC
**Manufacturer:** Apollo/Conbraco
**Model:** DCLF4A
**Size:** 3
**Orientation:** H
**Meters:**
**Manual:** 10
**0.25% Pb:** Yes
**Spare Parts Only:** No
**Approved:** 05-Nov-2013
**Renewed:** 05-Nov-2016
**Bypass:**
**Shutoffs:** (yyy), cccc, dddd, mmmm, nnnn, xxxxx, yyyyy, zzzzz, aaaaaa

---

**Type:** DC
**Manufacturer:** Apollo/Conbraco
**Model:** DCLF4A
**Size:** 3
**Orientation:** VU
**Meters:**
**Manual:** 10
**0.25% Pb:** Yes
**Spare Parts Only:** No
**Approved:** 05-Nov-2013
**Renewed:** 05-Nov-2016
**Bypass:**
**Shutoffs:** (yyy), cccc, dddd, mmmm, nnnn, xxxxx, yyyyy, zzzzz, aaaaaa


2018 © University of Southern California

**Type:** DC **Manufacturer:** Apollo/Conbraco **Model:** DCLF4A
**Size:** 4 **Orientation:** H **Meters:**
**Manual:** 10 **0.25% Pb:** Yes **Spare Parts Only:** No
**Approved:** 24-Jun-2013 **Renewed:** 24-Jun-2016 **Bypass:**
**Shutoffs:** (yyy), cccc, dddd, mmmm, nnnn, xxxxx, yyyyy, zzzzz, aaaaaa

---

**Type:** DC **Manufacturer:** Apollo/Conbraco **Model:** DCLF4A
**Size:** 4 **Orientation:** VU **Meters:**
**Manual:** 10 **0.25% Pb:** Yes **Spare Parts Only:** No
**Approved:** 24-Jun-2013 **Renewed:** 24-Jun-2016 **Bypass:**
**Shutoffs:** (yyy), cccc, dddd, mmmm, nnnn, xxxxx, yyyyy, zzzzz, aaaaaa

---

**Type:** DC **Manufacturer:** Apollo/Conbraco **Model:** DCLF4A
**Size:** 6 **Orientation:** H **Meters:**
**Manual:** 10 **0.25% Pb:** Yes **Spare Parts Only:** No
**Approved:** 24-Jun-2013 **Renewed:** 24-Jun-2016 **Bypass:**
**Shutoffs:** (yyy), cccc, dddd, mmmm, nnnn, xxxxx, yyyyy, zzzzz, aaaaaa

---

**Type:** DC **Manufacturer:** Apollo/Conbraco **Model:** DCLF4A
**Size:** 6 **Orientation:** VU **Meters:**
**Manual:** 10 **0.25% Pb:** Yes **Spare Parts Only:** No
**Approved:** 24-Jun-2013 **Renewed:** 24-Jun-2016 **Bypass:**
**Shutoffs:** (yyy), cccc, dddd, mmmm, nnnn, xxxxx, yyyyy, zzzzz, aaaaaa

---

**Type:** DC **Manufacturer:** Apollo/Conbraco **Model:** DCLF4A
**Size:** 8 **Orientation:** H **Meters:**
**Manual:** 10 **0.25% Pb:** Yes **Spare Parts Only:** No
**Approved:** 15-May-2014 **Renewed:** 15-May-2017 **Bypass:**
**Shutoffs:** (yyy), cccc, dddd, mmmm, nnnn, xxxxx, yyyyy, zzzzz, aaaaaa

---

**Type:** DC **Manufacturer:** Apollo/Conbraco **Model:** DCLF4A
**Size:** 8 **Orientation:** VU **Meters:**
**Manual:** 10 **0.25% Pb:** Yes **Spare Parts Only:** No
**Approved:** 15-May-2014 **Renewed:** 15-May-2017 **Bypass:**
**Shutoffs:** (yyy), cccc, dddd, mmmm, nnnn, xxxxx, yyyyy, zzzzz, aaaaaa

---

**Type:** DC **Manufacturer:** Apollo/Conbraco **Model:** DCLF4AN
**Size:** 2 1/2 **Orientation:** VUVD **Meters:**
**Manual:** 10 **0.25% Pb:** Yes **Spare Parts Only:** No
**Approved:** 10-Jun-2014 **Renewed:** 10-Jun-2017 **Bypass:**
**Shutoffs:** (yyy), cccc, dddd, mmmm, nnnn, xxxxx, yyyyy, zzzzz, aaaaaa

**Type:** DC **Manufacturer:** Apollo/Conbraco **Model:** DCLF4AN
**Size:** 3 **Orientation:** VUVD **Meters:**
**Manual:** 10 **0.25% Pb:** Yes **Spare Parts Only:** No
**Approved:** 08-Apr-2014 **Renewed:** 08-Apr-2017 **Bypass:**
**Shutoffs:** (yyy), cccc, dddd, mmmm, nnnn, xxxxx, yyyyy, zzzzz, aaaaaa

---

**Type:** DC **Manufacturer:** Apollo/Conbraco **Model:** DCLF4AN
**Size:** 4 **Orientation:** VUVD **Meters:**
**Manual:** 10 **0.25% Pb:** Yes **Spare Parts Only:** No
**Approved:** 22-Nov-2013 **Renewed:** 22-Nov-2016 **Bypass:**
**Shutoffs:** (yyy), cccc, dddd, mmmm, nnnn, xxxxx, yyyyy, zzzzz, aaaaaa

---

**Type:** DC **Manufacturer:** Apollo/Conbraco **Model:** DCLF4AN
**Size:** 6 **Orientation:** VUVD **Meters:**
**Manual:** 10 **0.25% Pb:** Yes **Spare Parts Only:** No
**Approved:** 15-Apr-2014 **Renewed:** 15-Apr-2017 **Bypass:**
**Shutoffs:** (yyy), cccc, dddd, mmmm, nnnn, xxxxx, yyyyy, zzzzz, aaaaaa

---

**Type:** DC **Manufacturer:** Apollo/Conbraco **Model:** DCLF4AN
**Size:** 8 **Orientation:** VUVD **Meters:**
**Manual:** 10 **0.25% Pb:** Yes **Spare Parts Only:** No
**Approved:** 20-Feb-2014 **Renewed:** 20-Feb-2017 **Bypass:**
**Shutoffs:** (yyy), cccc, dddd, mmmm, nnnn, xxxxx, yyyyy, zzzzz, aaaaaa

---

**Type:** DC **Manufacturer:** Apollo/Conbraco **Model:** DCLF4AR
**Size:** 2 1/2 **Orientation:** H **Meters:**
**Manual:** 10 **0.25% Pb:** No **Spare Parts Only:** No
**Approved:** 09-Nov-2015 **Renewed:** **Bypass:**
**Shutoffs:** (cccc), dddd, mmmm, nnnn, xxxxx, yyyyy, zzzzz, aaaaaa
**Notes:** Integral Stainless Steel grooved spool between the #2 ck and #2 SOV - assembly length: min. 34" and max. 47 1/8"

---

**Type:** DC **Manufacturer:** Apollo/Conbraco **Model:** DCLF4AR
**Size:** 2 1/2 **Orientation:** VU **Meters:**
**Manual:** 10 **0.25% Pb:** No **Spare Parts Only:** No
**Approved:** 09-Nov-2015 **Renewed:** **Bypass:**
**Shutoffs:** (cccc), dddd, mmmm, nnnn, xxxxx, yyyyy, zzzzz, aaaaaa
**Notes:** Integral Stainless Steel grooved spool between the #2 ck and #2 SOV - assembly length: min. 34" and max. 47 1/8"


2018 © University of Southern California

**Type:** DC **Manufacturer:** Apollo/Conbraco **Model:** DCLF4AR
**Size:** 3 **Orientation:** H **Meters:**
**Manual:** 10 **0.25% Pb:** No **Spare Parts Only:** No
**Approved:** 09-Nov-2015 **Renewed:** **Bypass:**
**Shutoffs:** (cccc), dddd, mmmm, nnnn, xxxxx, yyyyy, zzzzz, aaaaaa
**Notes:** Integral Stainless Steel grooved spool between the #2 ck and #2 SOV - assembly length: min. 35" and max. 48 1/8"

---

**Type:** DC **Manufacturer:** Apollo/Conbraco **Model:** DCLF4AR
**Size:** 3 **Orientation:** VU **Meters:**
**Manual:** 10 **0.25% Pb:** No **Spare Parts Only:** No
**Approved:** 09-Nov-2015 **Renewed:** **Bypass:**
**Shutoffs:** (cccc), dddd, mmmm, nnnn, xxxxx, yyyyy, zzzzz, aaaaaa
**Notes:** Integral Stainless Steel grooved spool between the #2 ck and #2 SOV - assembly length: min. 35" and max. 48 1/8"

---

**Type:** DC **Manufacturer:** Apollo/Conbraco **Model:** DCLF4AR
**Size:** 4 **Orientation:** H **Meters:**
**Manual:** 10 **0.25% Pb:** No **Spare Parts Only:** No
**Approved:** 21-Sep-2015 **Renewed:** 21-Sep-2018 **Bypass:**
**Shutoffs:** (cccc), dddd, mmmm, nnnn, xxxxx, yyyyy, zzzzz, aaaaaa
**Notes:** Integral Stainless Steel grooved spool between the #2 ck and #2 SOV - assembly length: min. 37 3/8" and max. 62 1/4"

---

**Type:** DC **Manufacturer:** Apollo/Conbraco **Model:** DCLF4AR
**Size:** 4 **Orientation:** VU **Meters:**
**Manual:** 10 **0.25% Pb:** No **Spare Parts Only:** No
**Approved:** 21-Sep-2015 **Renewed:** 21-Sep-2018 **Bypass:**
**Shutoffs:** (cccc), dddd, mmmm, nnnn, xxxxx, yyyyy, zzzzz, aaaaaa
**Notes:** Integral Stainless Steel grooved spool between the #2 ck and #2 SOV - assembly length: min. 37 3/8" and max. 62 1/4"

---

**Type:** DC **Manufacturer:** Apollo/Conbraco **Model:** DCLF4AR
**Size:** 6 **Orientation:** H **Meters:**
**Manual:** 10 **0.25% Pb:** No **Spare Parts Only:** No
**Approved:** 21-Sep-2015 **Renewed:** 21-Sep-2018 **Bypass:**
**Shutoffs:** (cccc), dddd, mmmm, nnnn, xxxxx, yyyyy, zzzzz, aaaaaa
**Notes:** Integral Stainless Steel grooved spool between the #2 ck and #2 SOV - assembly length: min. 46" and max. 71 1/4"

**Type:** DC **Manufacturer:** Apollo/Conbraco **Model:** DCLF4AR
**Size:** 6 **Orientation:** VU **Meters:**
**Manual:** 10 **0.25% Pb:** No **Spare Parts Only:** No
**Approved:** 21-Sep-2015 **Renewed:** 21-Sep-2018 **Bypass:**
**Shutoffs:** (cccc), dddd, mmmm, nnnn, xxxxx, yyyyy, zzzzz, aaaaaa
**Notes:** Integral Stainless Steel grooved spool between the #2 ck and #2 SOV - assembly length: min. 46" and max. 71 1/4"

---

**Type:** DC **Manufacturer:** Apollo/Conbraco **Model:** DCLF4AR
**Size:** 8 **Orientation:** H **Meters:**
**Manual:** 10 **0.25% Pb:** No **Spare Parts Only:** No
**Approved:** 21-Dec-2015 **Renewed:** **Bypass:**
**Shutoffs:** (cccc), dddd, mmmm, nnnn, xxxxx, yyyyy, zzzzz, aaaaaa
**Notes:** Integral Stainless Steel grooved spool between the #2 ck and #2 SOV - assembly length: min. 55 3/4" and max. 86"

---

**Type:** DC **Manufacturer:** Apollo/Conbraco **Model:** DCLF4AR
**Size:** 8 **Orientation:** VU **Meters:**
**Manual:** 10 **0.25% Pb:** No **Spare Parts Only:** No
**Approved:** 21-Dec-2015 **Renewed:** **Bypass:**
**Shutoffs:** (cccc), dddd, mmmm, nnnn, xxxxx, yyyyy, zzzzz, aaaaaa
**Notes:** Integral Stainless Steel grooved spool between the #2 ck and #2 SOV - assembly length: min. 55 3/4" and max. 86"

---

**Type:** DC **Manufacturer:** Apollo/Conbraco **Model:** DCLF4AY
**Size:** 3/4 **Orientation:** VU **Meters:**
**Manual:** 10 **0.25% Pb:** No **Spare Parts Only:** No
**Approved:** 24-Oct-2018 **Renewed:** **Bypass:**
**Shutoffs:** (ttttt)

---

**Type:** DC **Manufacturer:** Apollo/Conbraco **Model:** DCLF4AY
**Size:** 1 **Orientation:** VU **Meters:**
**Manual:** 10 **0.25% Pb:** No **Spare Parts Only:** No
**Approved:** 24-Oct-2018 **Renewed:** **Bypass:**
**Shutoffs:** (ttttt)

---

**Type:** DC **Manufacturer:** Apollo/Conbraco **Model:** DCLF4SG
**Size:** 2 1/2 **Orientation:** H **Meters:**
**Manual:** 9 **0.25% Pb:** Yes **Spare Parts Only:** No
**Approved:** 23-Jan-2015 **Renewed:** 23-Jan-2018 **Bypass:**
**Shutoffs:** (yyy), cccc, dddd, mmmm, nnnn, xxxxx, yyyyy, zzzzz, aaaaaa


2018 © University of Southern California

**Type:** DC **Manufacturer:** Apollo/Conbraco **Model:** DCLF4SG
**Size:** 2 1/2 **Orientation:** VU **Meters:**
**Manual:** 9 **0.25% Pb:** Yes **Spare Parts Only:** No
**Approved:** 23-Jan-2015 **Renewed:** 23-Jan-2018 **Bypass:**
**Shutoffs:** (yyy), cccc, dddd, mmmm, nnnn, xxxxx, yyyyy, zzzzz, aaaaaa

---

**Type:** DC **Manufacturer:** Apollo/Conbraco **Model:** DCLF4SG
**Size:** 3 **Orientation:** H **Meters:**
**Manual:** 9 **0.25% Pb:** Yes **Spare Parts Only:** No
**Approved:** 23-Jan-2015 **Renewed:** 23-Jan-2018 **Bypass:**
**Shutoffs:** (yyy), cccc, dddd, mmmm, nnnn, xxxxx, yyyyy, zzzzz, aaaaaa

---

**Type:** DC **Manufacturer:** Apollo/Conbraco **Model:** DCLF4SG
**Size:** 3 **Orientation:** VU **Meters:**
**Manual:** 9 **0.25% Pb:** Yes **Spare Parts Only:** No
**Approved:** 23-Jan-2015 **Renewed:** 23-Jan-2018 **Bypass:**
**Shutoffs:** (yyy), cccc, dddd, mmmm, nnnn, xxxxx, yyyyy, zzzzz, aaaaaa

---

**Type:** DC **Manufacturer:** Apollo/Conbraco **Model:** DCLF4SG
**Size:** 4 **Orientation:** H **Meters:**
**Manual:** 9 **0.25% Pb:** Yes **Spare Parts Only:** No
**Approved:** 23-Jan-2015 **Renewed:** 23-Jan-2018 **Bypass:**
**Shutoffs:** (yyy), cccc, dddd, mmmm, nnnn, xxxxx, yyyyy, zzzzz, aaaaaa

---

**Type:** DC **Manufacturer:** Apollo/Conbraco **Model:** DCLF4SG
**Size:** 4 **Orientation:** VU **Meters:**
**Manual:** 9 **0.25% Pb:** Yes **Spare Parts Only:** No
**Approved:** 23-Jan-2015 **Renewed:** 23-Jan-2018 **Bypass:**
**Shutoffs:** (yyy), cccc, dddd, mmmm, nnnn, xxxxx, yyyyy, zzzzz, aaaaaa

---

**Type:** DC **Manufacturer:** Apollo/Conbraco **Model:** DCLF4SG
**Size:** 6 **Orientation:** H **Meters:**
**Manual:** 9 **0.25% Pb:** Yes **Spare Parts Only:** No
**Approved:** 23-Jan-2015 **Renewed:** 23-Jan-2018 **Bypass:**
**Shutoffs:** (yyy), cccc, dddd, mmmm, nnnn, xxxxx, yyyyy, zzzzz, aaaaaa

---

**Type:** DC **Manufacturer:** Apollo/Conbraco **Model:** DCLF4SG
**Size:** 6 **Orientation:** VU **Meters:**
**Manual:** 9 **0.25% Pb:** Yes **Spare Parts Only:** No
**Approved:** 23-Jan-2015 **Renewed:** 23-Jan-2018 **Bypass:**
**Shutoffs:** (yyy), cccc, dddd, mmmm, nnnn, xxxxx, yyyyy, zzzzz, aaaaaa

**Type:** DC
**Size:** 1/2
**Manual:** 9
**Approved:** 18-Oct-2007
**Shutoffs:** (dd)
**Notes:** formerly 4S103

**Manufacturer:** Apollo/Conbraco
**Orientation:** H
**0.25% Pb:** No
**Renewed:** 18-Oct-2016

**Model:** W432100
**Meters:**
**Spare Parts Only:** No
**Bypass:**

---

**Type:** DC
**Size:** 1/2
**Manual:** 9
**Approved:** 18-Oct-2007
**Shutoffs:** (dd)
**Notes:** formerly 4S103

**Manufacturer:** Apollo/Conbraco
**Orientation:** VU
**0.25% Pb:** No
**Renewed:** 18-Oct-2016

**Model:** W432100
**Meters:**
**Spare Parts Only:** No
**Bypass:**

---

**Type:** DC
**Size:** 1/2
**Manual:** 9
**Approved:** 03-Jan-2013
**Shutoffs:** (ooooo), ii, ooo,ffffff

**Manufacturer:** ARI
**Orientation:** H
**0.25% Pb:** No
**Renewed:** 03-Jan-2016

**Model:** DC 500
**Meters:**
**Spare Parts Only:** No
**Bypass:**

---

**Type:** DC
**Size:** 1/2
**Manual:** 9
**Approved:** 18-Feb-2014
**Shutoffs:** (ooooo),ffffff

**Manufacturer:** ARI
**Orientation:** H
**0.25% Pb:** Yes
**Renewed:** 18-Feb-2017

**Model:** DC 500
**Meters:**
**Spare Parts Only:** No
**Bypass:**

---

**Type:** DC
**Size:** 3/4
**Manual:** 9
**Approved:** 02-Mar-2007
**Shutoffs:** (ii),ooo, ooooo, ffffff

**Manufacturer:** ARI
**Orientation:** H
**0.25% Pb:** No
**Renewed:** 02-Mar-2016

**Model:** DC 500
**Meters:**
**Spare Parts Only:** No
**Bypass:**

---

**Type:** DC
**Size:** 3/4
**Manual:** 9
**Approved:** 18-Feb-2014
**Shutoffs:** (ooooo), ffffff

**Manufacturer:** ARI
**Orientation:** H
**0.25% Pb:** Yes
**Renewed:** 18-Feb-2017

**Model:** DC 500
**Meters:**
**Spare Parts Only:** No
**Bypass:**


2018 © University of Southern California

**Type:** DC
**Size:** 1
**Manual:** 9
**Approved:** 02-Mar-2007
**Shutoffs:** (ii),ooo, ooooo

**Manufacturer:** ARI
**Orientation:** H
**0.25% Pb:** No
**Renewed:** 02-Mar-2016

**Model:** DC 500
**Meters:**
**Spare Parts Only:** No
**Bypass:**

---

**Type:** DC
**Size:** 1
**Manual:** 9
**Approved:** 18-Feb-2014
**Shutoffs:** (ooooo)

**Manufacturer:** ARI
**Orientation:** H
**0.25% Pb:** Yes
**Renewed:** 18-Feb-2017

**Model:** DC 500
**Meters:**
**Spare Parts Only:** No
**Bypass:**

---

**Type:** DC
**Size:** 1 1/4
**Manual:** 10
**Approved:** 08-Jan-2014
**Shutoffs:** (ooooo), ffffff

**Manufacturer:** ARI
**Orientation:** H
**0.25% Pb:** Yes
**Renewed:** 08-Jan-2017

**Model:** DC 500
**Meters:**
**Spare Parts Only:** No
**Bypass:**

---

**Type:** DC
**Size:** 1 1/2
**Manual:** 10
**Approved:** 08-Jan-2014
**Shutoffs:** (ooooo), ffffff

**Manufacturer:** ARI
**Orientation:** H
**0.25% Pb:** Yes
**Renewed:** 08-Jan-2017

**Model:** DC 500
**Meters:**
**Spare Parts Only:** No
**Bypass:**

---

**Type:** DC
**Size:** 2
**Manual:** 10
**Approved:** 08-Jan-2014
**Shutoffs:** (ooooo), ffffff

**Manufacturer:** ARI
**Orientation:** H
**0.25% Pb:** Yes
**Renewed:** 08-Jan-2017

**Model:** DC 500
**Meters:**
**Spare Parts Only:** No
**Bypass:**

---

**Type:** DC
**Size:** 1/2
**Manual:** 10
**Approved:** 06-Sep-2018
**Shutoffs:** (int)

**Manufacturer:** ARI
**Orientation:** H
**0.25% Pb:** Yes
**Renewed:**

**Model:** DC 501
**Meters:**
**Spare Parts Only:** No
**Bypass:**

---

**Type:** DC
**Size:** 3/4
**Manual:** 10
**Approved:** 20-Mar-2017
**Shutoffs:** (int)

**Manufacturer:** ARI
**Orientation:** H
**0.25% Pb:** Yes
**Renewed:**

**Model:** DC 501
**Meters:**
**Spare Parts Only:** No
**Bypass:**

**Type:** DC
**Size:** 1
**Manual:** 10
**Approved:** 15-Mar-2018
**Shutoffs:** (int)
**Manufacturer:** ARI
**Orientation:** H
**0.25% Pb:** Yes
**Renewed:**
**Model:** DC 501
**Meters:**
**Spare Parts Only:** No
**Bypass:**

---

**Type:** DC
**Size:** 1 1/4
**Manual:** 10
**Approved:** 20-Mar-2017
**Shutoffs:** (int)
**Manufacturer:** ARI
**Orientation:** H
**0.25% Pb:** Yes
**Renewed:**
**Model:** DC 501
**Meters:**
**Spare Parts Only:** No
**Bypass:**

---

**Type:** DC
**Size:** 1 1/2
**Manual:** 10
**Approved:** 20-Mar-2017
**Shutoffs:** (int)
**Manufacturer:** ARI
**Orientation:** H
**0.25% Pb:** Yes
**Renewed:**
**Model:** DC 501
**Meters:**
**Spare Parts Only:** No
**Bypass:**

---

**Type:** DC
**Size:** 2
**Manual:** 10
**Approved:** 20-Mar-2017
**Shutoffs:** (int)
**Manufacturer:** ARI
**Orientation:** H
**0.25% Pb:** Yes
**Renewed:**
**Model:** DC 501
**Meters:**
**Spare Parts Only:** No
**Bypass:**

---

**Type:** DC
**Size:** 2 1/2
**Manual:** 10
**Approved:** 21-Dec-2015
**Shutoffs:** (int)
**Manufacturer:** Backflow Direct
**Orientation:** H
**0.25% Pb:** Yes
**Renewed:**
**Model:** Deringer 20
**Meters:**
**Spare Parts Only:** No
**Bypass:**

---

**Type:** DC
**Size:** 2 1/2
**Manual:** 10
**Approved:** 21-Dec-2015
**Shutoffs:** (int)
**Manufacturer:** Backflow Direct
**Orientation:** VU
**0.25% Pb:** Yes
**Renewed:**
**Model:** Deringer 20
**Meters:**
**Spare Parts Only:** No
**Bypass:**

---

**Type:** DC
**Size:** 3
**Manual:** 10
**Approved:** 21-Dec-2015
**Shutoffs:** (int)
**Manufacturer:** Backflow Direct
**Orientation:** H
**0.25% Pb:** Yes
**Renewed:**
**Model:** Deringer 20
**Meters:**
**Spare Parts Only:** No
**Bypass:**


2018 © University of Southern California

**Type:** DC
**Size:** 3
**Manual:** 10
**Approved:** 21-Dec-2015
**Shutoffs:** (int)
**Manufacturer:** Backflow Direct
**Orientation:** VU
**0.25% Pb:** Yes
**Renewed:**
**Model:** Deringer 20
**Meters:**
**Spare Parts Only:** No
**Bypass:**

---

**Type:** DC
**Size:** 4
**Manual:** 10
**Approved:** 30-Sep-2015
**Shutoffs:** (int)
**Manufacturer:** Backflow Direct
**Orientation:** H
**0.25% Pb:** Yes
**Renewed:** 30-Sep-2018
**Model:** Deringer 20
**Meters:**
**Spare Parts Only:** No
**Bypass:**

---

**Type:** DC
**Size:** 4
**Manual:** 10
**Approved:** 30-Sep-2015
**Shutoffs:** (int)
**Manufacturer:** Backflow Direct
**Orientation:** VU
**0.25% Pb:** Yes
**Renewed:** 30-Sep-2018
**Model:** Deringer 20
**Meters:**
**Spare Parts Only:** No
**Bypass:**

---

**Type:** DC
**Size:** 8
**Manual:** 10
**Approved:** 23-Dec-2016
**Shutoffs:** (int)
**Manufacturer:** Backflow Direct
**Orientation:** H
**0.25% Pb:** Yes
**Renewed:**
**Model:** Deringer 20
**Meters:**
**Spare Parts Only:** No
**Bypass:**

---

**Type:** DC
**Size:** 8
**Manual:** 10
**Approved:** 23-Dec-2016
**Shutoffs:** (int)
**Manufacturer:** Backflow Direct
**Orientation:** VU
**0.25% Pb:** Yes
**Renewed:**
**Model:** Deringer 20
**Meters:**
**Spare Parts Only:** No
**Bypass:**

---

**Type:** DC
**Size:** 8
**Manual:** 10
**Approved:** 31-Jul-2018
**Shutoffs:** (ssssss), tttttt
**Manufacturer:** Backflow Direct
**Orientation:** H
**0.25% Pb:** Yes
**Renewed:**
**Model:** Deringer 20G
**Meters:**
**Spare Parts Only:** No
**Bypass:**

---

**Type:** DC
**Size:** 8
**Manual:** 10
**Approved:** 31-Jul-2018
**Shutoffs:** (ssssss), tttttt
**Manufacturer:** Backflow Direct
**Orientation:** VU
**0.25% Pb:** Yes
**Renewed:**
**Model:** Deringer 20G
**Meters:**
**Spare Parts Only:** No
**Bypass:**

**Type:** DC
**Size:** 6
**Manual:** 10
**Approved:** 31-Jul-2018
**Shutoffs:** (ssssss), tttttt
**Manufacturer:** Backflow Direct
**Orientation:** H
**0.25% Pb:** Yes
**Renewed:**
**Model:** Deringer 20GX
**Meters:**
**Spare Parts Only:** No
**Bypass:**

---

**Type:** DC
**Size:** 6
**Manual:** 10
**Approved:** 31-Jul-2018
**Shutoffs:** (ssssss), tttttt
**Manufacturer:** Backflow Direct
**Orientation:** VU
**0.25% Pb:** Yes
**Renewed:**
**Model:** Deringer 20GX
**Meters:**
**Spare Parts Only:** No
**Bypass:**

---

**Type:** DC
**Size:** 6
**Manual:** 10
**Approved:** 23-Dec-2016
**Shutoffs:** (int)
**Manufacturer:** Backflow Direct
**Orientation:** H
**0.25% Pb:** Yes
**Renewed:**
**Model:** Deringer 20X
**Meters:**
**Spare Parts Only:** No
**Bypass:**

---

**Type:** DC
**Size:** 6
**Manual:** 10
**Approved:** 23-Dec-2016
**Shutoffs:** (int)
**Manufacturer:** Backflow Direct
**Orientation:** VU
**0.25% Pb:** Yes
**Renewed:**
**Model:** Deringer 20X
**Meters:**
**Spare Parts Only:** No
**Bypass:**

---

**Type:** DC
**Size:** 2 1/2
**Manual:** 10
**Approved:** 15-Mar-2018
**Shutoffs:** (int)
**Manufacturer:** Backflow Direct
**Orientation:** H
**0.25% Pb:** Yes
**Renewed:**
**Model:** Magnum 20
**Meters:**
**Spare Parts Only:** No
**Bypass:**

---

**Type:** DC
**Size:** 2 1/2
**Manual:** 10
**Approved:** 15-Mar-2018
**Shutoffs:** (int)
**Manufacturer:** Backflow Direct
**Orientation:** VU
**0.25% Pb:** Yes
**Renewed:**
**Model:** Magnum 20
**Meters:**
**Spare Parts Only:** No
**Bypass:**

---

**Type:** DC
**Size:** 3
**Manual:** 10
**Approved:** 15-Mar-2018
**Shutoffs:** (int)
**Manufacturer:** Backflow Direct
**Orientation:** H
**0.25% Pb:** Yes
**Renewed:**
**Model:** Magnum 20
**Meters:**
**Spare Parts Only:** No
**Bypass:**


2018 © University of Southern California

**Type:** DC
**Size:** 3
**Manual:** 10
**Approved:** 15-Mar-2018
**Shutoffs:** (int)
**Manufacturer:** Backflow Direct
**Orientation:** VU
**0.25% Pb:** Yes
**Renewed:**
**Model:** Magnum 20
**Meters:**
**Spare Parts Only:** No
**Bypass:**

---

**Type:** DC
**Size:** 4
**Manual:** 10
**Approved:** 15-Mar-2018
**Shutoffs:** (int)
**Manufacturer:** Backflow Direct
**Orientation:** H
**0.25% Pb:** Yes
**Renewed:**
**Model:** Magnum 20
**Meters:**
**Spare Parts Only:** No
**Bypass:**

---

**Type:** DC
**Size:** 4
**Manual:** 10
**Approved:** 15-Mar-2018
**Shutoffs:** (int)
**Manufacturer:** Backflow Direct
**Orientation:** VU
**0.25% Pb:** Yes
**Renewed:**
**Model:** Magnum 20
**Meters:**
**Spare Parts Only:** No
**Bypass:**

---

**Type:** DC
**Size:** 8
**Manual:** 10
**Approved:** 15-Mar-2018
**Shutoffs:** (int)
**Manufacturer:** Backflow Direct
**Orientation:** H
**0.25% Pb:** Yes
**Renewed:**
**Model:** Magnum 20
**Meters:**
**Spare Parts Only:** No
**Bypass:**

---

**Type:** DC
**Size:** 8
**Manual:** 10
**Approved:** 15-Mar-2018
**Shutoffs:** (int)
**Manufacturer:** Backflow Direct
**Orientation:** VU
**0.25% Pb:** Yes
**Renewed:**
**Model:** Magnum 20
**Meters:**
**Spare Parts Only:** No
**Bypass:**

---

**Type:** DC
**Size:** 8
**Manual:** 10
**Approved:** 31-Jul-2018
**Shutoffs:** (qqqqqq), rrrrrr
**Manufacturer:** Backflow Direct
**Orientation:** H
**0.25% Pb:** Yes
**Renewed:**
**Model:** Magnum 20G
**Meters:**
**Spare Parts Only:** No
**Bypass:**

---

**Type:** DC
**Size:** 8
**Manual:** 10
**Approved:** 31-Jul-2018
**Shutoffs:** (qqqqqq), rrrrrr
**Manufacturer:** Backflow Direct
**Orientation:** VU
**0.25% Pb:** Yes
**Renewed:**
**Model:** Magnum 20G
**Meters:**
**Spare Parts Only:** No
**Bypass:**

**Type:** DC
**Size:** 6
**Manual:** 10
**Approved:** 31-Jul-2018
**Shutoffs:** (qqqqqq), rrrrrr

**Manufacturer:** Backflow Direct
**Orientation:** H
**0.25% Pb:** Yes
**Renewed:**

**Model:** Magnum 20GX
**Meters:**
**Spare Parts Only:** No
**Bypass:**

---

**Type:** DC
**Size:** 6
**Manual:** 10
**Approved:** 31-Jul-2018
**Shutoffs:** (qqqqqq), rrrrrr

**Manufacturer:** Backflow Direct
**Orientation:** VU
**0.25% Pb:** Yes
**Renewed:**

**Model:** Magnum 20GX
**Meters:**
**Spare Parts Only:** No
**Bypass:**

---

**Type:** DC
**Size:** 6
**Manual:** 10
**Approved:** 15-Mar-2018
**Shutoffs:** (int)

**Manufacturer:** Backflow Direct
**Orientation:** H
**0.25% Pb:** Yes
**Renewed:**

**Model:** Magnum 20X
**Meters:**
**Spare Parts Only:** No
**Bypass:**

---

**Type:** DC
**Size:** 6
**Manual:** 10
**Approved:** 15-Mar-2018
**Shutoffs:** (int)

**Manufacturer:** Backflow Direct
**Orientation:** VU
**0.25% Pb:** Yes
**Renewed:**

**Model:** Magnum 20X
**Meters:**
**Spare Parts Only:** No
**Bypass:**

---

**Type:** DC
**Size:** 8
**Manual:** 8
**Approved:** 22-Jun-1989
**Shutoffs:** (gg),hh,qq,rr

**Manufacturer:** Cla-Val
**Orientation:** H
**0.25% Pb:** No
**Renewed:** 22-Jun-2016

**Model:** D4
**Meters:**
**Spare Parts Only:** Yes
**Bypass:**

---

**Type:** DC
**Size:** 10
**Manual:** 8
**Approved:** 22-Jun-1989
**Shutoffs:** (gg),hh,qq,rr

**Manufacturer:** Cla-Val
**Orientation:** H
**0.25% Pb:** No
**Renewed:** 22-Jun-2016

**Model:** D4
**Meters:**
**Spare Parts Only:** Yes
**Bypass:**

---

**Type:** DC
**Size:**
**Manual:**
**Approved:**
**Notes:** See Apollo/Conbraco

**Manufacturer:** Conbraco
**Orientation:**
**0.25% Pb:** No
**Renewed:**

**Model:**
**Meters:**
**Spare Parts Only:** No
**Bypass:**


2018 © University of Southern California

**Type:** DC
**Manufacturer:** Febco
**Model:** 805 Type YD
**Size:** 2 1/2
**Orientation:**
**Meters:**
**Manual:**
**0.25% Pb:** No
**Spare Parts Only:** No
**Approved:**
**Renewed:**
**Bypass:**
**Notes:** model designation changed to 805YD

---

**Type:** DC
**Manufacturer:** Febco
**Model:** 805 Type YD
**Size:** 3
**Orientation:**
**Meters:**
**Manual:**
**0.25% Pb:** No
**Spare Parts Only:** No
**Approved:**
**Renewed:**
**Bypass:**
**Notes:** model designation changed to 805YD

---

**Type:** DC
**Manufacturer:** Febco
**Model:** 805 Type YD
**Size:** 4
**Orientation:**
**Meters:**
**Manual:**
**0.25% Pb:** No
**Spare Parts Only:** No
**Approved:**
**Renewed:**
**Bypass:**
**Notes:** model designation changed to 805YD

---

**Type:** DC
**Manufacturer:** Febco
**Model:** 805 Type YD
**Size:** 6
**Orientation:**
**Meters:**
**Manual:**
**0.25% Pb:** No
**Spare Parts Only:** No
**Approved:**
**Renewed:**
**Bypass:**
**Notes:** model designation changed to 805YD

---

**Type:** DC
**Manufacturer:** Febco
**Model:** 805 Type YD
**Size:** 8
**Orientation:**
**Meters:**
**Manual:**
**0.25% Pb:** No
**Spare Parts Only:** No
**Approved:**
**Renewed:**
**Bypass:**
**Notes:** model designation changed to 805YD

---

**Type:** DC
**Manufacturer:** Febco
**Model:** 805 Type YD
**Size:** 10
**Orientation:**
**Meters:**
**Manual:**
**0.25% Pb:** No
**Spare Parts Only:** No
**Approved:**
**Renewed:**
**Bypass:**
**Notes:** model designation changed to 805YD

---

**Type:** DC
**Manufacturer:** Febco
**Model:** 805Y
**Size:** 3/4
**Orientation:** H
**Meters:**
**Manual:** 6
**0.25% Pb:** No
**Spare Parts Only:** Yes
**Approved:** 13-May-1982
**Renewed:** 13-May-2018
**Bypass:**
**Shutoffs:** ii,fff,jjj,ooo

**Type:** DC
**Manufacturer:** Febco
**Model:** 805Y
**Size:** 1
**Orientation:** H
**Meters:**
**Manual:** 6
**0.25% Pb:** No
**Spare Parts Only:** Yes
**Approved:** 13-May-1982
**Renewed:** 13-May-2018
**Bypass:**
**Shutoffs:** ii,fff,jjj,ooo

---

**Type:** DC
**Manufacturer:** Febco
**Model:** 805Y
**Size:** 1 1/2
**Orientation:** H
**Meters:**
**Manual:** 6
**0.25% Pb:** No
**Spare Parts Only:** Yes
**Approved:** 05-Jan-1983
**Renewed:** 05-Jan-2016
**Bypass:**
**Shutoffs:** ii,fff,jjj,ooo

---

**Type:** DC
**Manufacturer:** Febco
**Model:** 805Y
**Size:** 2
**Orientation:** H
**Meters:**
**Manual:** 6
**0.25% Pb:** No
**Spare Parts Only:** Yes
**Approved:** 05-Jan-1983
**Renewed:** 05-Jan-2016
**Bypass:**
**Shutoffs:** ii,fff,ooo

---

**Type:** DC
**Manufacturer:** Febco
**Model:** 805YB
**Size:** 3/4
**Orientation:** H
**Meters:**
**Manual:** 8
**0.25% Pb:** No
**Spare Parts Only:** No
**Approved:** 04-May-1994
**Renewed:** 04-May-2018
**Bypass:**
**Shutoffs:** (ii),fff,jjj,ooo
**Notes:** Replaceable seats beginning with Serial No. A105801

---

**Type:** DC
**Manufacturer:** Febco
**Model:** 805YB
**Size:** 3/4
**Orientation:** VU
**Meters:**
**Manual:** 8
**0.25% Pb:** No
**Spare Parts Only:** No
**Approved:** 16-Apr-1996
**Renewed:** 16-Apr-2017
**Bypass:**
**Shutoffs:** (ii),fff,jjj,ooo
**Notes:** Replaceable seats beginning with Serial No. A105801

---

**Type:** DC
**Manufacturer:** Febco
**Model:** 805YD
**Size:** 2 1/2
**Orientation:** H
**Meters:**
**Manual:** 7
**0.25% Pb:** No
**Spare Parts Only:** Yes
**Approved:** 31-May-1987
**Renewed:** 31-May-2017
**Bypass:**
**Shutoffs:** (ee),ff,ll,mm,oo,pp,tt,uu,zzz,ffff,gggg
**Notes:** formerly 805 Type YD


2018 © University of Southern California

**Type:** DC **Manufacturer:** Febco **Model:** 805YD
**Size:** 3 **Orientation:** H **Meters:**
**Manual:** 7 **0.25% Pb:** No **Spare Parts Only:** Yes
**Approved:** 31-May-1987 **Renewed:** 31-May-2017 **Bypass:**
**Shutoffs:** (ee),ff,ll,mm,oo,pp,tt,uu,zzz,ffff,gggg
**Notes:** formerly 805 Type YD

---

**Type:** DC **Manufacturer:** Febco **Model:** 805YD
**Size:** 4 **Orientation:** H **Meters:**
**Manual:** 7 **0.25% Pb:** No **Spare Parts Only:** Yes
**Approved:** 31-May-1987 **Renewed:** 31-May-2017 **Bypass:**
**Shutoffs:** (ee),ff,ll,mm,oo,pp,tt,uu,zzz,ffff,gggg
**Notes:** formerly 805 Type YD

---

**Type:** DC **Manufacturer:** Febco **Model:** 805YD
**Size:** 6 **Orientation:** H **Meters:**
**Manual:** 7 **0.25% Pb:** No **Spare Parts Only:** Yes
**Approved:** 31-May-1987 **Renewed:** 31-May-2017 **Bypass:**
**Shutoffs:** (ee),ff,ll,mm,oo,pp,tt,uu,zzz,ffff,gggg
**Notes:** formerly 805 Type YD

---

**Type:** DC **Manufacturer:** Febco **Model:** 805YD
**Size:** 8 **Orientation:** H **Meters:**
**Manual:** 7 **0.25% Pb:** No **Spare Parts Only:** Yes
**Approved:** 31-May-1987 **Renewed:** 31-May-2017 **Bypass:**
**Shutoffs:** (ee),ff,ll,mm,oo,pp,tt,uu,zzz,ffff,gggg
**Notes:** formerly 805 Type YD

---

**Type:** DC **Manufacturer:** Febco **Model:** 805YD
**Size:** 10 **Orientation:** H **Meters:**
**Manual:** 7 **0.25% Pb:** No **Spare Parts Only:** Yes
**Approved:** 31-May-1987 **Renewed:** 31-May-2017 **Bypass:**
**Shutoffs:** (ee),ff,ll,mm,oo,pp,tt,uu,zzz,ffff,gggg
**Notes:** formerly 805 Type YD

---

**Type:** DC **Manufacturer:** Febco **Model:** 805YR
**Size:** 3/4 **Orientation:** H **Meters:**
**Manual:** 8 **0.25% Pb:** No **Spare Parts Only:** Yes
**Approved:** 22-Jan-1993 **Renewed:** 22-Jan-2017 **Bypass:**
**Shutoffs:** ii,fff,jjj,ooo

**Type:** DC
**Size:** 1
**Manual:** 8
**Approved:** 22-Jan-1993
**Shutoffs:** ii,fff,jjj,ooo

**Manufacturer:** Febco
**Orientation:** H
**0.25% Pb:** No
**Renewed:** 22-Jan-2017

**Model:** 805YR
**Meters:**
**Spare Parts Only:** Yes
**Bypass:**

---

**Type:** DC
**Size:** 1/2
**Manual:** 9
**Approved:** 21-Nov-1997
**Shutoffs:** (fff),ooo

**Manufacturer:** Febco
**Orientation:** H
**0.25% Pb:** No
**Renewed:** 21-Nov-2015

**Model:** 850
**Meters:**
**Spare Parts Only:** No
**Bypass:**

---

**Type:** DC
**Size:** 1/2
**Manual:** 9
**Approved:** 13-Apr-2000
**Shutoffs:** (fff),ooo

**Manufacturer:** Febco
**Orientation:** VD
**0.25% Pb:** No
**Renewed:** 13-Apr-2018

**Model:** 850
**Meters:**
**Spare Parts Only:** No
**Bypass:**

---

**Type:** DC
**Size:** 1/2
**Manual:** 9
**Approved:** 17-Dec-1999
**Shutoffs:** (fff),ooo

**Manufacturer:** Febco
**Orientation:** VU
**0.25% Pb:** No
**Renewed:** 17-Dec-2017

**Model:** 850
**Meters:**
**Spare Parts Only:** No
**Bypass:**

---

**Type:** DC
**Size:** 3/4
**Manual:** 9
**Approved:** 21-Nov-1997
**Shutoffs:** (fff),jjj,ooo

**Manufacturer:** Febco
**Orientation:** H
**0.25% Pb:** No
**Renewed:** 21-Nov-2015

**Model:** 850
**Meters:**
**Spare Parts Only:** No
**Bypass:**

---

**Type:** DC
**Size:** 3/4
**Manual:** 9
**Approved:** 10-Apr-2000
**Shutoffs:** (fff),jjj,ooo

**Manufacturer:** Febco
**Orientation:** VD
**0.25% Pb:** No
**Renewed:** 10-Apr-2018

**Model:** 850
**Meters:**
**Spare Parts Only:** No
**Bypass:**

---

**Type:** DC
**Size:** 3/4
**Manual:** 9
**Approved:** 17-Dec-1999
**Shutoffs:** (fff),jjj,ooo

**Manufacturer:** Febco
**Orientation:** VU
**0.25% Pb:** No
**Renewed:** 17-Dec-2017

**Model:** 850
**Meters:**
**Spare Parts Only:** No
**Bypass:**


2018 © University of Southern California

**Type:** DC
**Size:** 1
**Manual:** 9
**Approved:** 21-Nov-1997
**Shutoffs:** (fff),jjj,ooo
**Manufacturer:** Febco
**Orientation:** H
**0.25% Pb:** No
**Renewed:** 21-Nov-2015
**Model:** 850
**Meters:**
**Spare Parts Only:** No
**Bypass:**

---

**Type:** DC
**Size:** 1
**Manual:** 9
**Approved:** 14-Jan-2000
**Shutoffs:** (fff),jjj,ooo
**Manufacturer:** Febco
**Orientation:** VD
**0.25% Pb:** No
**Renewed:** 14-Jan-2018
**Model:** 850
**Meters:**
**Spare Parts Only:** No
**Bypass:**

---

**Type:** DC
**Size:** 1
**Manual:** 9
**Approved:** 07-Sep-2000
**Shutoffs:** (fff),jjj,ooo
**Manufacturer:** Febco
**Orientation:** VU
**0.25% Pb:** No
**Renewed:** 07-Sep-2018
**Model:** 850
**Meters:**
**Spare Parts Only:** No
**Bypass:**

---

**Type:** DC
**Size:** 1 1/4
**Manual:** 9
**Approved:** 21-Nov-1997
**Shutoffs:** (fff),jjj,ooo
**Manufacturer:** Febco
**Orientation:** H
**0.25% Pb:** No
**Renewed:** 21-Nov-2015
**Model:** 850
**Meters:**
**Spare Parts Only:** No
**Bypass:**

---

**Type:** DC
**Size:** 1 1/4
**Manual:** 9
**Approved:** 13-Apr-2000
**Shutoffs:** (fff),jjj,ooo
**Manufacturer:** Febco
**Orientation:** VD
**0.25% Pb:** No
**Renewed:** 13-Apr-2018
**Model:** 850
**Meters:**
**Spare Parts Only:** No
**Bypass:**

---

**Type:** DC
**Size:** 1 1/4
**Manual:** 9
**Approved:** 17-Jul-1999
**Shutoffs:** (fff),jjj,ooo
**Manufacturer:** Febco
**Orientation:** VU
**0.25% Pb:** No
**Renewed:** 10-Jul-2017
**Model:** 850
**Meters:**
**Spare Parts Only:** No
**Bypass:**

---

**Type:** DC
**Size:** 1 1/2
**Manual:** 9
**Approved:** 19-Feb-1998
**Shutoffs:** (fff),jjj,ooo
**Manufacturer:** Febco
**Orientation:** H
**0.25% Pb:** No
**Renewed:** 19-Feb-2016
**Model:** 850
**Meters:**
**Spare Parts Only:** No
**Bypass:**

**Type:** DC
**Manufacturer:** Febco
**Model:** 850
**Size:** 1 1/2
**Orientation:** VD
**Meters:**
**Manual:** 9
**0.25% Pb:** No
**Spare Parts Only:** No
**Approved:** 13-Apr-2000
**Renewed:** 13-Apr-2018
**Bypass:**
**Shutoffs:** (fff),jjj,ooo

---

**Type:** DC
**Manufacturer:** Febco
**Model:** 850
**Size:** 1 1/2
**Orientation:** VU
**Meters:**
**Manual:** 9
**0.25% Pb:** No
**Spare Parts Only:** No
**Approved:** 17-Jul-1999
**Renewed:** 10-Jul-2017
**Bypass:**
**Shutoffs:** (fff),jjj,ooo

---

**Type:** DC
**Manufacturer:** Febco
**Model:** 850
**Size:** 2
**Orientation:** H
**Meters:**
**Manual:** 9
**0.25% Pb:** No
**Spare Parts Only:** No
**Approved:** 19-Feb-1998
**Renewed:** 19-Feb-2016
**Bypass:**
**Shutoffs:** (fff),ooo

---

**Type:** DC
**Manufacturer:** Febco
**Model:** 850
**Size:** 2
**Orientation:** VD
**Meters:**
**Manual:** 9
**0.25% Pb:** No
**Spare Parts Only:** No
**Approved:** 10-Apr-2000
**Renewed:** 10-Apr-2018
**Bypass:**
**Shutoffs:** (fff),ooo

---

**Type:** DC
**Manufacturer:** Febco
**Model:** 850
**Size:** 2
**Orientation:** VU
**Meters:**
**Manual:** 9
**0.25% Pb:** No
**Spare Parts Only:** No
**Approved:** 17-Jul-1999
**Renewed:** 10-Jul-2017
**Bypass:**
**Shutoffs:** (fff),ooo

---

**Type:** DC
**Manufacturer:** Febco
**Model:** 850
**Size:** 2 1/2
**Orientation:** H
**Meters:**
**Manual:** 8
**0.25% Pb:** No
**Spare Parts Only:** Yes
**Approved:** 14-Mar-1997
**Renewed:** 14-Mar-2018
**Bypass:**
**Shutoffs:** (ee),ff,ll,mm,oo,pp,tt,uu,zzz,cccc,ffff,gggg

---

**Type:** DC
**Manufacturer:** Febco
**Model:** 850
**Size:** 2 1/2
**Orientation:** VU
**Meters:**
**Manual:** 8
**0.25% Pb:** No
**Spare Parts Only:** Yes
**Approved:** 19-Mar-1997
**Renewed:** 19-Mar-2018
**Bypass:**
**Shutoffs:** (ee),ff,ll,mm,oo,pp,tt,uu,zzz,cccc,ffff,gggg


2018 © University of Southern California

**Type:** DC **Manufacturer:** Febco **Model:** 850
**Size:** 3 **Orientation:** H **Meters:**
**Manual:** 8 **0.25% Pb:** No **Spare Parts Only:** Yes
**Approved:** 14-Mar-1997 **Renewed:** 14-Mar-2018 **Bypass:**
**Shutoffs:** (ee),ff,ll,mm,oo,pp,tt,uu,zzz,cccc,ffff,gggg

---

**Type:** DC **Manufacturer:** Febco **Model:** 850
**Size:** 3 **Orientation:** VU **Meters:**
**Manual:** 8 **0.25% Pb:** No **Spare Parts Only:** Yes
**Approved:** 19-Mar-1997 **Renewed:** 19-Mar-2018 **Bypass:**
**Shutoffs:** (ee),ff,ll,mm,oo,pp,tt,uu,zzz,cccc,ffff,gggg

---

**Type:** DC **Manufacturer:** Febco **Model:** 850
**Size:** 4 **Orientation:** H **Meters:**
**Manual:** 8 **0.25% Pb:** No **Spare Parts Only:** Yes
**Approved:** 04-May-1994 **Renewed:** 04-May-2018 **Bypass:**
**Shutoffs:** (ee),ff,ll,mm,oo,pp,tt,uu,nnn,zzz,cccc,ffff,gggg

---

**Type:** DC **Manufacturer:** Febco **Model:** 850
**Size:** 4 **Orientation:** VU **Meters:**
**Manual:** 8 **0.25% Pb:** No **Spare Parts Only:** Yes
**Approved:** 07-Feb-1995 **Renewed:** 07-Feb-2016 **Bypass:**
**Shutoffs:** (ee),ff,ll,mm,oo,pp,tt,uu,nnn,zzz,cccc,ffff,gggg

---

**Type:** DC **Manufacturer:** Febco **Model:** 850
**Size:** 6 **Orientation:** H **Meters:**
**Manual:** 8 **0.25% Pb:** No **Spare Parts Only:** Yes
**Approved:** 04-May-1994 **Renewed:** 04-May-2018 **Bypass:**
**Shutoffs:** (ee),ff,ll,mm,oo,pp,tt,uu,nnn,zzz,cccc,ffff,gggg

---

**Type:** DC **Manufacturer:** Febco **Model:** 850
**Size:** 6 **Orientation:** VU **Meters:**
**Manual:** 8 **0.25% Pb:** No **Spare Parts Only:** Yes
**Approved:** 31-May-1995 **Renewed:** 31-May-2016 **Bypass:**
**Shutoffs:** (ee),ff,ll,mm,oo,pp,tt,uu,nnn,zzz,cccc,ffff,gggg

---

**Type:** DC **Manufacturer:** Febco **Model:** 850
**Size:** 8 **Orientation:** H **Meters:**
**Manual:** 8 **0.25% Pb:** No **Spare Parts Only:** Yes
**Approved:** 04-Oct-1995 **Renewed:** 04-Oct-2016 **Bypass:**
**Shutoffs:** (ee),ff,ll,mm,oo,pp,tt,uu,nnn,zzz,cccc,ffff,gggg

**Type:** DC
**Manufacturer:** Febco
**Model:** 850
**Size:** 8
**Orientation:** VU
**Meters:**
**Manual:** 8
**0.25% Pb:** No
**Spare Parts Only:** Yes
**Approved:** 14-Oct-1996
**Renewed:** 14-Oct-2017
**Bypass:**
**Shutoffs:** (ee),ff,ll,mm,oo,pp,tt,uu,nnn,zzz,cccc,ffff,gggg

---

**Type:** DC
**Manufacturer:** Febco
**Model:** 850F
**Size:** 3/4
**Orientation:** H
**Meters:**
**Manual:** 9
**0.25% Pb:** No
**Spare Parts Only:** Yes
**Approved:** 28-Sep-2001
**Renewed:** 28-Sep-2016
**Bypass:**
**Shutoffs:** fff,jjj

---

**Type:** DC
**Manufacturer:** Febco
**Model:** 850F
**Size:** 3/4
**Orientation:** VD
**Meters:**
**Manual:** 9
**0.25% Pb:** No
**Spare Parts Only:** No
**Approved:** 28-Sep-2001
**Renewed:** 28-Sep-2016
**Bypass:**
**Shutoffs:** (fff),jjj

---

**Type:** DC
**Manufacturer:** Febco
**Model:** 850F
**Size:** 3/4
**Orientation:** VU
**Meters:**
**Manual:** 9
**0.25% Pb:** No
**Spare Parts Only:** No
**Approved:** 28-Sep-2001
**Renewed:** 28-Sep-2016
**Bypass:**
**Shutoffs:** (fff),jjj

---

**Type:** DC
**Manufacturer:** Febco
**Model:** 850U
**Size:** 1/2
**Orientation:** H
**Meters:**
**Manual:** 9
**0.25% Pb:** No
**Spare Parts Only:** No
**Approved:** 12-Oct-1998
**Renewed:** 12-Oct-2016
**Bypass:**
**Shutoffs:** (kkk)

---

**Type:** DC
**Manufacturer:** Febco
**Model:** 850U
**Size:** 1/2
**Orientation:** VD
**Meters:**
**Manual:** 9
**0.25% Pb:** No
**Spare Parts Only:** No
**Approved:** 16-Oct-2000
**Renewed:** 16-Oct-2018
**Bypass:**
**Shutoffs:** (kkk)

---

**Type:** DC
**Manufacturer:** Febco
**Model:** 850U
**Size:** 1/2
**Orientation:** VU
**Meters:**
**Manual:** 9
**0.25% Pb:** No
**Spare Parts Only:** No
**Approved:** 17-Dec-1999
**Renewed:** 17-Dec-2017
**Bypass:**
**Shutoffs:** (kkk)


2018 © University of Southern California

**Type:** DC
**Size:** 3/4
**Manual:** 9
**Approved:** 08-Mar-1999
**Shutoffs:** (kkk)
**Manufacturer:** Febco
**Orientation:** H
**0.25% Pb:** No
**Renewed:** 08-Mar-2017
**Model:** 850U
**Meters:**
**Spare Parts Only:** No
**Bypass:**

---

**Type:** DC
**Size:** 3/4
**Manual:** 9
**Approved:** 16-Oct-2000
**Shutoffs:** (kkk)
**Manufacturer:** Febco
**Orientation:** VD
**0.25% Pb:** No
**Renewed:** 16-Oct-2018
**Model:** 850U
**Meters:**
**Spare Parts Only:** No
**Bypass:**

---

**Type:** DC
**Size:** 3/4
**Manual:** 9
**Approved:** 17-Dec-1999
**Shutoffs:** (kkk)
**Manufacturer:** Febco
**Orientation:** VU
**0.25% Pb:** No
**Renewed:** 17-Dec-2017
**Model:** 850U
**Meters:**
**Spare Parts Only:** No
**Bypass:**

---

**Type:** DC
**Size:** 1
**Manual:** 9
**Approved:** 04-Aug-1999
**Shutoffs:** (kkk)
**Manufacturer:** Febco
**Orientation:** H
**0.25% Pb:** No
**Renewed:** 04-Aug-2017
**Model:** 850U
**Meters:**
**Spare Parts Only:** No
**Bypass:**

---

**Type:** DC
**Size:** 1
**Manual:** 9
**Approved:** 14-Jan-2000
**Shutoffs:** (kkk)
**Manufacturer:** Febco
**Orientation:** VD
**0.25% Pb:** No
**Renewed:** 14-Jan-2018
**Model:** 850U
**Meters:**
**Spare Parts Only:** No
**Bypass:**

---

**Type:** DC
**Size:** 1
**Manual:** 9
**Approved:** 16-Oct-2000
**Shutoffs:** (kkk)
**Manufacturer:** Febco
**Orientation:** VU
**0.25% Pb:** No
**Renewed:** 16-Oct-2018
**Model:** 850U
**Meters:**
**Spare Parts Only:** No
**Bypass:**

---

**Type:** DC
**Size:** 1 1/4
**Manual:** 9
**Approved:** 12-Oct-1998
**Shutoffs:** (kkk)
**Manufacturer:** Febco
**Orientation:** H
**0.25% Pb:** No
**Renewed:** 12-Oct-2016
**Model:** 850U
**Meters:**
**Spare Parts Only:** No
**Bypass:**

**Type:** DC
**Size:** 1 1/4
**Manual:** 9
**Approved:** 16-Oct-2000
**Shutoffs:** (kkk)
**Manufacturer:** Febco
**Orientation:** VD
**0.25% Pb:** No
**Renewed:** 16-Oct-2018
**Model:** 850U
**Meters:**
**Spare Parts Only:** No
**Bypass:**

---

**Type:** DC
**Size:** 1 1/4
**Manual:** 9
**Approved:** 04-Aug-1999
**Shutoffs:** (kkk)
**Manufacturer:** Febco
**Orientation:** VU
**0.25% Pb:** No
**Renewed:** 04-Aug-2017
**Model:** 850U
**Meters:**
**Spare Parts Only:** No
**Bypass:**

---

**Type:** DC
**Size:** 1 1/2
**Manual:** 9
**Approved:** 12-Oct-1998
**Shutoffs:** (kkk)
**Manufacturer:** Febco
**Orientation:** H
**0.25% Pb:** No
**Renewed:** 12-Oct-2016
**Model:** 850U
**Meters:**
**Spare Parts Only:** No
**Bypass:**

---

**Type:** DC
**Size:** 1 1/2
**Manual:** 9
**Approved:** 16-Oct-2000
**Shutoffs:** (kkk)
**Manufacturer:** Febco
**Orientation:** VD
**0.25% Pb:** No
**Renewed:** 16-Oct-2018
**Model:** 850U
**Meters:**
**Spare Parts Only:** No
**Bypass:**

---

**Type:** DC
**Size:** 1 1/2
**Manual:** 9
**Approved:** 04-Aug-1999
**Shutoffs:** (kkk)
**Manufacturer:** Febco
**Orientation:** VU
**0.25% Pb:** No
**Renewed:** 04-Aug-2017
**Model:** 850U
**Meters:**
**Spare Parts Only:** No
**Bypass:**

---

**Type:** DC
**Size:** 2
**Manual:** 9
**Approved:** 12-Oct-1998
**Shutoffs:** (kkk)
**Manufacturer:** Febco
**Orientation:** H
**0.25% Pb:** No
**Renewed:** 12-Oct-2016
**Model:** 850U
**Meters:**
**Spare Parts Only:** No
**Bypass:**

---

**Type:** DC
**Size:** 2
**Manual:** 9
**Approved:** 16-Oct-2000
**Shutoffs:** (kkk)
**Manufacturer:** Febco
**Orientation:** VD
**0.25% Pb:** No
**Renewed:** 16-Oct-2018
**Model:** 850U
**Meters:**
**Spare Parts Only:** No
**Bypass:**


2018 © University of Southern California

**Type:** DC
**Manufacturer:** Febco
**Model:** 850U
**Size:** 2
**Orientation:** VU
**Meters:**
**Manual:** 9
**0.25% Pb:** No
**Spare Parts Only:** No
**Approved:** 04-Aug-1999
**Renewed:** 04-Aug-2017
**Bypass:**
**Shutoffs:** (kkk)

---

**Type:** DC
**Manufacturer:** Febco
**Model:** 857
**Size:** 2 1/2
**Orientation:** H
**Meters:**
**Manual:** 8
**0.25% Pb:** No
**Spare Parts Only:** Yes
**Approved:** 01-Aug-2006
**Renewed:** 01-Aug-2018
**Bypass:**
**Shutoffs:** (oo), gg, hh,ll, mm, pp, tt, uu, yy, fff

---

**Type:** DC
**Manufacturer:** Febco
**Model:** 857
**Size:** 2 1/2
**Orientation:** VU
**Meters:**
**Manual:** 8
**0.25% Pb:** No
**Spare Parts Only:** Yes
**Approved:** 01-Aug-2006
**Renewed:** 01-Aug-2018
**Bypass:**
**Shutoffs:** (oo), gg, hh,ll, mm, pp, tt, uu, yy, fff

---

**Type:** DC
**Manufacturer:** Febco
**Model:** 857
**Size:** 3
**Orientation:** H
**Meters:**
**Manual:** 8
**0.25% Pb:** No
**Spare Parts Only:** Yes
**Approved:** 01-Aug-2006
**Renewed:** 01-Aug-2018
**Bypass:**
**Shutoffs:** (oo), gg, hh,ll, mm, pp, tt, uu, yy, fff

---

**Type:** DC
**Manufacturer:** Febco
**Model:** 857
**Size:** 3
**Orientation:** VU
**Meters:**
**Manual:** 8
**0.25% Pb:** No
**Spare Parts Only:** Yes
**Approved:** 01-Aug-2006
**Renewed:** 01-Aug-2018
**Bypass:**
**Shutoffs:** (oo), gg, hh,ll, mm, pp, tt, uu, yy, fff

---

**Type:** DC
**Manufacturer:** Febco
**Model:** 870
**Size:** 2 1/2
**Orientation:** VUVD
**Meters:**
**Manual:** 8
**0.25% Pb:** No
**Spare Parts Only:** Yes
**Approved:** 10-Mar-1995
**Renewed:** 10-Mar-2016
**Bypass:**
**Shutoffs:** ee,ff,ll,mm,oo,pp,tt,uu,zzz,ffff,gggg

---

**Type:** DC
**Manufacturer:** Febco
**Model:** 870
**Size:** 3
**Orientation:** VUVD
**Meters:**
**Manual:** 8
**0.25% Pb:** No
**Spare Parts Only:** Yes
**Approved:** 10-Mar-1995
**Renewed:** 10-Mar-2016
**Bypass:**
**Shutoffs:** ee,ff,ll,mm,oo,pp,tt,uu,zzz,ffff,gggg

**Type:** DC **Manufacturer:** Febco **Model:** 870
**Size:** 4 **Orientation:** VUVD **Meters:**
**Manual:** 8 **0.25% Pb:** No **Spare Parts Only:** Yes
**Approved:** 04-May-1994 **Renewed:** 04-May-2018 **Bypass:**
**Shutoffs:** ee,ff,ll,mm,oo,pp,tt,uu,zzz,ffff,gggg

---

**Type:** DC **Manufacturer:** Febco **Model:** 870
**Size:** 6 **Orientation:** VUVD **Meters:**
**Manual:** 8 **0.25% Pb:** No **Spare Parts Only:** Yes
**Approved:** 04-May-1994 **Renewed:** 04-May-2018 **Bypass:**
**Shutoffs:** ee,ff,ll,mm,oo,pp,tt,uu,zzz,ffff,gggg

---

**Type:** DC **Manufacturer:** Febco **Model:** 870
**Size:** 8 **Orientation:** VUVD **Meters:**
**Manual:** 8 **0.25% Pb:** No **Spare Parts Only:** Yes
**Approved:** 24-May-1994 **Renewed:** 24-May-2018 **Bypass:**
**Shutoffs:** ee,ff,ll,mm,oo,pp,tt,uu,zzz,ffff,gggg

---

**Type:** DC **Manufacturer:** Febco **Model:** 870
**Size:** 10 **Orientation:** VUVD **Meters:**
**Manual:** 8 **0.25% Pb:** No **Spare Parts Only:** Yes
**Approved:** 04-Oct-1996 **Renewed:** 04-Oct-2017 **Bypass:**
**Shutoffs:** ee,ff,ll,mm,oo,pp,tt,uu,zzz,ffff,gggg

---

**Type:** DC **Manufacturer:** Febco **Model:** 870V
**Size:** 2 1/2 **Orientation:** VUVD **Meters:**
**Manual:** 8 **0.25% Pb:** No **Spare Parts Only:** Yes
**Approved:** 08-Mar-1996 **Renewed:** 08-Mar-2017 **Bypass:**
**Shutoffs:** (ee),ff,ll,mm,oo.pp,tt,uu,zzz,cccc,ffff,gggg

---

**Type:** DC **Manufacturer:** Febco **Model:** 870V
**Size:** 2 1/2 **Orientation:** VUVU **Meters:**
**Manual:** 8 **0.25% Pb:** No **Spare Parts Only:** Yes
**Approved:** 08-Mar-1996 **Renewed:** 08-Mar-2017 **Bypass:**
**Shutoffs:** (ee),ff,ll,mm,oo.pp,tt,uu,zzz,cccc,ffff,gggg

---

**Type:** DC **Manufacturer:** Febco **Model:** 870V
**Size:** 3 **Orientation:** VUVD **Meters:**
**Manual:** 8 **0.25% Pb:** No **Spare Parts Only:** Yes
**Approved:** 08-Mar-1996 **Renewed:** 08-Mar-2017 **Bypass:**
**Shutoffs:** (ee),ff,ll,mm,oo.pp,tt,uu,zzz,cccc,ffff,gggg


2018 © University of Southern California

**Type:** DC **Manufacturer:** Febco **Model:** 870V
**Size:** 3 **Orientation:** VUVU **Meters:**
**Manual:** 8 **0.25% Pb:** No **Spare Parts Only:** Yes
**Approved:** 08-Mar-1996 **Renewed:** 08-Mar-2017 **Bypass:**
**Shutoffs:** (ee),ff,ll,mm,oo.pp,tt,uu,zzz,cccc,ffff,gggg

---

**Type:** DC **Manufacturer:** Febco **Model:** 870V
**Size:** 4 **Orientation:** VUVD **Meters:**
**Manual:** 8 **0.25% Pb:** No **Spare Parts Only:** Yes
**Approved:** 08-Mar-1996 **Renewed:** 08-Mar-2017 **Bypass:**
**Shutoffs:** (ee),ff,ll,mm,oo.pp,tt,uu,zzz,cccc,ffff,gggg

---

**Type:** DC **Manufacturer:** Febco **Model:** 870V
**Size:** 4 **Orientation:** VUVU **Meters:**
**Manual:** 8 **0.25% Pb:** No **Spare Parts Only:** Yes
**Approved:** 08-Mar-1996 **Renewed:** 08-Mar-2017 **Bypass:**
**Shutoffs:** (ee),ff,ll,mm,oo.pp,tt,uu,zzz,cccc,ffff,gggg

---

**Type:** DC **Manufacturer:** Febco **Model:** 870V
**Size:** 6 **Orientation:** VUVD **Meters:**
**Manual:** 8 **0.25% Pb:** No **Spare Parts Only:** Yes
**Approved:** 08-Mar-1996 **Renewed:** 08-Mar-2017 **Bypass:**
**Shutoffs:** (ee),ff,ll,mm,oo.pp,tt,uu,zzz,cccc,ffff,gggg

---

**Type:** DC **Manufacturer:** Febco **Model:** 870V
**Size:** 6 **Orientation:** VUVU **Meters:**
**Manual:** 8 **0.25% Pb:** No **Spare Parts Only:** Yes
**Approved:** 08-Mar-1996 **Renewed:** 08-Mar-2017 **Bypass:**
**Shutoffs:** (ee),ff,ll,mm,oo.pp,tt,uu,zzz,cccc,ffff,gggg

---

**Type:** DC **Manufacturer:** Febco **Model:** 870V
**Size:** 8 **Orientation:** VUVD **Meters:**
**Manual:** 8 **0.25% Pb:** No **Spare Parts Only:** Yes
**Approved:** 06-Jan-1997 **Renewed:** 06-Jan-2017 **Bypass:**
**Shutoffs:** (ee),ff,ll,mm,oo.pp,tt,uu,zzz,cccc,ffff,gggg

---

**Type:** DC **Manufacturer:** Febco **Model:** 870V
**Size:** 8 **Orientation:** VUVU **Meters:**
**Manual:** 8 **0.25% Pb:** No **Spare Parts Only:** Yes
**Approved:** 06-Jan-1997 **Renewed:** 06-Jan-2017 **Bypass:**
**Shutoffs:** (ee),ff,ll,mm,oo.pp,tt,uu,zzz,cccc,ffff,gggg

**Type:** DC
**Manufacturer:** Febco
**Model:** 870V
**Size:** 10
**Orientation:** VUVD
**Meters:**
**Manual:** 8
**0.25% Pb:** No
**Spare Parts Only:** Yes
**Approved:** 11-Jul-1997
**Renewed:** 11-Jul-2018
**Bypass:**
**Shutoffs:** (ee),ff,ll,mm,oo.pp,tt,uu,zzz,cccc,dddd,eeee,ffff,gggg,nnnnn

---

**Type:** DC
**Manufacturer:** Febco
**Model:** 870V
**Size:** 10
**Orientation:** VUVU
**Meters:**
**Manual:** 8
**0.25% Pb:** No
**Spare Parts Only:** Yes
**Approved:** 11-Jul-1997
**Renewed:** 11-Jul-2018
**Bypass:**
**Shutoffs:** (ee),ff,ll,mm,oo.pp,tt,uu,zzz,cccc,dddd,eeee,ffff,gggg,nnnnn

---

**Type:** DC
**Manufacturer:** Febco
**Model:** LF850
**Size:** 1/2
**Orientation:** H
**Meters:**
**Manual:** 9
**0.25% Pb:** Yes
**Spare Parts Only:** No
**Approved:** 18-Feb-2010
**Renewed:** 18-Feb-2016
**Bypass:**
**Shutoffs:** (qqqqq), hhhh

---

**Type:** DC
**Manufacturer:** Febco
**Model:** LF850
**Size:** 3/4
**Orientation:** H
**Meters:**
**Manual:** 9
**0.25% Pb:** Yes
**Spare Parts Only:** No
**Approved:** 18-Feb-2010
**Renewed:** 18-Feb-2016
**Bypass:**
**Shutoffs:** (qqqqq), hhhh

---

**Type:** DC
**Manufacturer:** Febco
**Model:** LF850
**Size:** 1
**Orientation:** H
**Meters:**
**Manual:** 9
**0.25% Pb:** Yes
**Spare Parts Only:** No
**Approved:** 18-Feb-2010
**Renewed:** 18-Feb-2016
**Bypass:**
**Shutoffs:** (qqqqq), hhhh

---

**Type:** DC
**Manufacturer:** Febco
**Model:** LF850
**Size:** 1 1/4
**Orientation:** H
**Meters:**
**Manual:** 9
**0.25% Pb:** Yes
**Spare Parts Only:** No
**Approved:** 18-Feb-2010
**Renewed:** 18-Feb-2016
**Bypass:**
**Shutoffs:** (qqqqq), hhhh

---

**Type:** DC
**Manufacturer:** Febco
**Model:** LF850
**Size:** 1 1/2
**Orientation:** H
**Meters:**
**Manual:** 9
**0.25% Pb:** Yes
**Spare Parts Only:** No
**Approved:** 18-Feb-2010
**Renewed:** 18-Feb-2016
**Bypass:**
**Shutoffs:** (qqqqq), hhhh


2018 © University of Southern California

**Type:** DC
**Manufacturer:** Febco
**Model:** LF850
**Size:** 2
**Orientation:** H
**Meters:**
**Manual:** 9
**0.25% Pb:** Yes
**Spare Parts Only:** No
**Approved:** 18-Feb-2010
**Renewed:** 18-Feb-2016
**Bypass:**
**Shutoffs:** (qqqqq), hhhh

---

**Type:** DC
**Manufacturer:** Febco
**Model:** LF850
**Size:** 2 1/2
**Orientation:** H
**Meters:**
**Manual:** 9
**0.25% Pb:** Yes
**Spare Parts Only:** No
**Approved:** 22-May-2012
**Renewed:** 22-May-2018
**Bypass:**
**Shutoffs:** (mm),ll,oo,pp,zzz,cccc,dddd,eeee,ffff,gggg,nnnnn

---

**Type:** DC
**Manufacturer:** Febco
**Model:** LF850
**Size:** 2 1/2
**Orientation:** VU
**Meters:**
**Manual:** 9
**0.25% Pb:** Yes
**Spare Parts Only:** No
**Approved:** 22-May-2012
**Renewed:** 22-May-2018
**Bypass:**
**Shutoffs:** (mm),ll,oo,pp,zzz,cccc,dddd,eeee,ffff,gggg,nnnnn

---

**Type:** DC
**Manufacturer:** Febco
**Model:** LF850
**Size:** 3
**Orientation:** H
**Meters:**
**Manual:** 9
**0.25% Pb:** Yes
**Spare Parts Only:** No
**Approved:** 22-May-2012
**Renewed:** 22-May-2018
**Bypass:**
**Shutoffs:** (mm),ll,oo,pp,zzz,cccc,dddd,eeee,ffff,gggg,nnnnn

---

**Type:** DC
**Manufacturer:** Febco
**Model:** LF850
**Size:** 3
**Orientation:** VU
**Meters:**
**Manual:** 9
**0.25% Pb:** Yes
**Spare Parts Only:** No
**Approved:** 22-May-2012
**Renewed:** 22-May-2018
**Bypass:**
**Shutoffs:** (mm),ll,oo,pp,zzz,cccc,dddd,eeee,ffff,gggg,nnnnn

---

**Type:** DC
**Manufacturer:** Febco
**Model:** LF850
**Size:** 4
**Orientation:** H
**Meters:**
**Manual:** 9
**0.25% Pb:** Yes
**Spare Parts Only:** No
**Approved:** 22-May-2012
**Renewed:** 22-May-2018
**Bypass:**
**Shutoffs:** (mm),ll,oo,pp,zzz,cccc,dddd,eeee,ffff,gggg,nnnnn

---

**Type:** DC
**Manufacturer:** Febco
**Model:** LF850
**Size:** 4
**Orientation:** VU
**Meters:**
**Manual:** 9
**0.25% Pb:** Yes
**Spare Parts Only:** No
**Approved:** 22-May-2012
**Renewed:** 22-May-2018
**Bypass:**
**Shutoffs:** (mm),ll,oo,pp,zzz,cccc,dddd,eeee,ffff,gggg,nnnnn

**Type:** DC **Manufacturer:** Febco **Model:** LF850
**Size:** 6 **Orientation:** H **Meters:**
**Manual:** 9 **0.25% Pb:** Yes **Spare Parts Only:** No
**Approved:** 22-May-2012 **Renewed:** 22-May-2018 **Bypass:**
**Shutoffs:** (mm),ll,oo,pp,zzz,cccc,dddd,eeee,ffff,gggg,nnnnn

---

**Type:** DC **Manufacturer:** Febco **Model:** LF850
**Size:** 6 **Orientation:** VU **Meters:**
**Manual:** 9 **0.25% Pb:** Yes **Spare Parts Only:** No
**Approved:** 22-May-2012 **Renewed:** 22-May-2018 **Bypass:**
**Shutoffs:** (mm),ll,oo,pp,zzz,cccc,dddd,eeee,ffff,gggg,nnnnn

---

**Type:** DC **Manufacturer:** Febco **Model:** LF850
**Size:** 8 **Orientation:** H **Meters:**
**Manual:** 9 **0.25% Pb:** Yes **Spare Parts Only:** No
**Approved:** 22-May-2012 **Renewed:** 22-May-2018 **Bypass:**
**Shutoffs:** (mm),ll,oo,pp,zzz,cccc,dddd,eeee,ffff,gggg,nnnnn

---

**Type:** DC **Manufacturer:** Febco **Model:** LF850
**Size:** 8 **Orientation:** VU **Meters:**
**Manual:** 9 **0.25% Pb:** Yes **Spare Parts Only:** No
**Approved:** 22-May-2012 **Renewed:** 22-May-2018 **Bypass:**
**Shutoffs:** (mm),ll,oo,pp,zzz,cccc,dddd,eeee,ffff,gggg,nnnnn

---

**Type:** DC **Manufacturer:** Febco **Model:** LF850
**Size:** 10 **Orientation:** H **Meters:**
**Manual:** 9 **0.25% Pb:** Yes **Spare Parts Only:** No
**Approved:** 24-Jun-2013 **Renewed:** 24-Jun-2016 **Bypass:**
**Shutoffs:** (mm),ll,oo,pp,zzz,cccc,dddd,eeee,ffff,gggg,nnnnn

---

**Type:** DC **Manufacturer:** Febco **Model:** LF850
**Size:** 10 **Orientation:** VU **Meters:**
**Manual:** 9 **0.25% Pb:** Yes **Spare Parts Only:** No
**Approved:** 24-Jun-2013 **Renewed:** 24-Jun-2016 **Bypass:**
**Shutoffs:** (mm),ll,oo,pp,zzz,cccc,dddd,eeee,ffff,gggg,nnnnn

---

**Type:** DC **Manufacturer:** Febco **Model:** LF850U
**Size:** 1/2 **Orientation:** H **Meters:**
**Manual:** 9 **0.25% Pb:** Yes **Spare Parts Only:** No
**Approved:** 03-Sep-2013 **Renewed:** 03-Sep-2016 **Bypass:**
**Shutoffs:** (ppppp), hhhh


2018 © University of Southern California

**Type:** DC
**Manufacturer:** Febco
**Model:** LF850U
**Size:** 3/4
**Orientation:** H
**Meters:**
**Manual:** 9
**0.25% Pb:** Yes
**Spare Parts Only:** No
**Approved:** 03-Sep-2013
**Renewed:** 03-Sep-2016
**Bypass:**
**Shutoffs:** (ppppp), hhhh

---

**Type:** DC
**Manufacturer:** Febco
**Model:** LF850U
**Size:** 1
**Orientation:** H
**Meters:**
**Manual:** 9
**0.25% Pb:** Yes
**Spare Parts Only:** No
**Approved:** 03-Sep-2013
**Renewed:** 03-Sep-2016
**Bypass:**
**Shutoffs:** (ppppp), hhhh

---

**Type:** DC
**Manufacturer:** Febco
**Model:** LF850U
**Size:** 1 1/4
**Orientation:** H
**Meters:**
**Manual:** 9
**0.25% Pb:** Yes
**Spare Parts Only:** No
**Approved:** 03-Sep-2013
**Renewed:** 03-Sep-2016
**Bypass:**
**Shutoffs:** (ppppp), hhhh

---

**Type:** DC
**Manufacturer:** Febco
**Model:** LF850U
**Size:** 1 1/2
**Orientation:** H
**Meters:**
**Manual:** 9
**0.25% Pb:** Yes
**Spare Parts Only:** No
**Approved:** 03-Sep-2013
**Renewed:** 03-Sep-2016
**Bypass:**
**Shutoffs:** (ppppp), hhhh

---

**Type:** DC
**Manufacturer:** Febco
**Model:** LF850U
**Size:** 2
**Orientation:** H
**Meters:**
**Manual:** 9
**0.25% Pb:** Yes
**Spare Parts Only:** No
**Approved:** 03-Sep-2013
**Renewed:** 03-Sep-2016
**Bypass:**
**Shutoffs:** (ppppp), hhhh

---

**Type:** DC
**Manufacturer:** Febco
**Model:** LF870V
**Size:** 2 1/2
**Orientation:** VUVD
**Meters:**
**Manual:** 9
**0.25% Pb:** Yes
**Spare Parts Only:** No
**Approved:** 09-Aug-2012
**Renewed:** 09-Aug-2018
**Bypass:**
**Shutoffs:** (mm),ll,oo,pp,zzz,cccc,dddd,eeee,ffff,gggg,nnnnn

---

**Type:** DC
**Manufacturer:** Febco
**Model:** LF870V
**Size:** 2 1/2
**Orientation:** VUVU
**Meters:**
**Manual:** 9
**0.25% Pb:** Yes
**Spare Parts Only:** No
**Approved:** 09-Aug-2012
**Renewed:** 09-Aug-2018
**Bypass:**
**Shutoffs:** (mm),ll,oo,pp,zzz,cccc,dddd,eeee,ffff,gggg,nnnnn

**Type:** DC **Manufacturer:** Febco **Model:** LF870V
**Size:** 3 **Orientation:** VUVD **Meters:**
**Manual:** 9 **0.25% Pb:** Yes **Spare Parts Only:** No
**Approved:** 22-May-2012 **Renewed:** 22-May-2018 **Bypass:**
**Shutoffs:** (mm),ll,oo,pp,zzz,cccc,dddd,eeee,ffff,gggg,nnnnn

---

**Type:** DC **Manufacturer:** Febco **Model:** LF870V
**Size:** 3 **Orientation:** VUVU **Meters:**
**Manual:** 9 **0.25% Pb:** Yes **Spare Parts Only:** No
**Approved:** 22-May-2012 **Renewed:** 22-May-2018 **Bypass:**
**Shutoffs:** (mm),ll,oo,pp,zzz,cccc,dddd,eeee,ffff,gggg,nnnnn

---

**Type:** DC **Manufacturer:** Febco **Model:** LF870V
**Size:** 4 **Orientation:** VUVD **Meters:**
**Manual:** 9 **0.25% Pb:** Yes **Spare Parts Only:** No
**Approved:** 22-May-2012 **Renewed:** 22-May-2018 **Bypass:**
**Shutoffs:** (mm),ll,oo,pp,zzz,cccc,dddd,eeee,ffff,gggg,nnnnn

---

**Type:** DC **Manufacturer:** Febco **Model:** LF870V
**Size:** 4 **Orientation:** VUVU **Meters:**
**Manual:** 9 **0.25% Pb:** Yes **Spare Parts Only:** No
**Approved:** 22-May-2012 **Renewed:** 22-May-2018 **Bypass:**
**Shutoffs:** (mm),ll,oo,pp,zzz,cccc,dddd,eeee,ffff,gggg,nnnnn

---

**Type:** DC **Manufacturer:** Febco **Model:** LF870V
**Size:** 6 **Orientation:** VUVD **Meters:**
**Manual:** 9 **0.25% Pb:** Yes **Spare Parts Only:** No
**Approved:** 22-May-2012 **Renewed:** 22-May-2018 **Bypass:**
**Shutoffs:** (mm),ll,oo,pp,zzz,cccc,dddd,eeee,ffff,gggg,nnnnn

---

**Type:** DC **Manufacturer:** Febco **Model:** LF870V
**Size:** 6 **Orientation:** VUVU **Meters:**
**Manual:** 9 **0.25% Pb:** Yes **Spare Parts Only:** No
**Approved:** 22-May-2012 **Renewed:** 22-May-2018 **Bypass:**
**Shutoffs:** (mm),ll,oo,pp,zzz,cccc,dddd,eeee,ffff,gggg,nnnnn

---

**Type:** DC **Manufacturer:** Febco **Model:** LF870V
**Size:** 8 **Orientation:** VUVD **Meters:**
**Manual:** 9 **0.25% Pb:** Yes **Spare Parts Only:** No
**Approved:** 22-May-2012 **Renewed:** 22-May-2018 **Bypass:**
**Shutoffs:** (mm),ll,oo,pp,zzz,cccc,dddd,eeee,ffff,gggg,nnnnn


2018 © University of Southern California

**Type:** DC **Manufacturer:** Febco **Model:** LF870V
**Size:** 8 **Orientation:** VUVU **Meters:**
**Manual:** 9 **0.25% Pb:** Yes **Spare Parts Only:** No
**Approved:** 22-May-2012 **Renewed:** 22-May-2018 **Bypass:**
**Shutoffs:** (mm),ll,oo,pp,zzz,cccc,dddd,eeee,ffff,gggg,nnnnn

---

**Type:** DC **Manufacturer:** Febco **Model:** LF870V
**Size:** 10 **Orientation:** VUVD **Meters:**
**Manual:** 10 **0.25% Pb:** Yes **Spare Parts Only:** No
**Approved:** 29-May-2018 **Renewed:** **Bypass:**
**Shutoffs:** (mm),ll,oo,pp,zzz,cccc,dddd,eeee,ffff,gggg,nnnnn

---

**Type:** DC **Manufacturer:** Febco **Model:** LF870V
**Size:** 10 **Orientation:** VUVU **Meters:**
**Manual:** 10 **0.25% Pb:** Yes **Spare Parts Only:** No
**Approved:** 29-May-2018 **Renewed:** **Bypass:**
**Shutoffs:** (mm),ll,oo,pp,zzz,cccc,dddd,eeee,ffff,gggg,nnnnn

---

**Type:** DC **Manufacturer:** Neptune **Model:**
**Size:** **Orientation:** **Meters:**
**Manual:** **0.25% Pb:** No **Spare Parts Only:** No
**Approved:** **Renewed:** **Bypass:**
**Notes:** See Wilkins

---

**Type:** DC **Manufacturer:** Watts **Model:** 007
**Size:** 2 1/2 **Orientation:** H **Meters:**
**Manual:** 8 **0.25% Pb:** No **Spare Parts Only:** Yes
**Approved:** 30-Sep-1990 **Renewed:** 30-Sep-2017 **Bypass:**
**Shutoffs:** (oo),gg,hh,ll,mm,pp,tt,uu,yy,ffff,gggg

---

**Type:** DC **Manufacturer:** Watts **Model:** 007
**Size:** 2 1/2 **Orientation:** VU **Meters:**
**Manual:** 8 **0.25% Pb:** Yes **Spare Parts Only:** Yes
**Approved:** 27-Aug-1996 **Renewed:** 27-Aug-2017 **Bypass:**
**Shutoffs:** (oo),gg,hh,ll,mm,pp,tt,uu,yy,ffff,gggg

---

**Type:** DC **Manufacturer:** Watts **Model:** 007
**Size:** 3 **Orientation:** H **Meters:**
**Manual:** 8 **0.25% Pb:** No **Spare Parts Only:** Yes
**Approved:** 30-Sep-1990 **Renewed:** 30-Sep-2017 **Bypass:**
**Shutoffs:** (oo),gg,hh,ll,mm,pp,tt,uu,yy,eee,ffff,gggg

**Type:** DC
**Manufacturer:** Watts
**Model:** 007
**Size:** 3
**Orientation:** VU
**Meters:**
**Manual:** 8
**0.25% Pb:** Yes
**Spare Parts Only:** Yes
**Approved:** 27-Aug-1996
**Renewed:** 27-Aug-2017
**Bypass:**
**Shutoffs:** (oo),gg,hh,ll,mm,pp,tt,uu,yy,eee,ffff,gggg

---

**Type:** DC
**Manufacturer:** Watts
**Model:** 007M1-FP
**Size:** 1
**Orientation:** H
**Meters:**
**Manual:** 9
**0.25% Pb:** Yes
**Spare Parts Only:** No
**Approved:** 01-Sep-2009
**Renewed:** 01-Sep-2018
**Bypass:**
**Shutoffs:** (eeeee)

---

**Type:** DC
**Manufacturer:** Watts
**Model:** 007M1-FP
**Size:** 2
**Orientation:** H
**Meters:**
**Manual:** 9
**0.25% Pb:** Yes
**Spare Parts Only:** No
**Approved:** 01-Sep-2009
**Renewed:** 01-Sep-2018
**Bypass:**
**Shutoffs:** (eeeee)

---

**Type:** DC
**Manufacturer:** Watts
**Model:** 007M1PCQT
**Size:** 3/4
**Orientation:** H
**Meters:**
**Manual:** 8
**0.25% Pb:** Yes
**Spare Parts Only:** No
**Approved:** 10-Dec-1993
**Renewed:** 10-Dec-2017
**Bypass:**
**Shutoffs:** (vv),xx,ooo,hhhh,pppp

---

**Type:** DC
**Manufacturer:** Watts
**Model:** 007M1PCQT
**Size:** 1
**Orientation:** H
**Meters:**
**Manual:** 8
**0.25% Pb:** Yes
**Spare Parts Only:** No
**Approved:** 10-Dec-1993
**Renewed:** 10-Dec-2017
**Bypass:**
**Shutoffs:** (vv),xx,ooo,hhhh,pppp

---

**Type:** DC
**Manufacturer:** Watts
**Model:** 007M1PCQT
**Size:** 1 1/2
**Orientation:** H
**Meters:**
**Manual:** 8
**0.25% Pb:** Yes
**Spare Parts Only:** Yes
**Approved:** 27-Sep-1994
**Renewed:** 27-Sep-2018
**Bypass:**
**Shutoffs:** vv,xx,ooo,hhhh,pppp

---

**Type:** DC
**Manufacturer:** Watts
**Model:** 007M1PCQT
**Size:** 2
**Orientation:** H
**Meters:**
**Manual:** 8
**0.25% Pb:** No
**Spare Parts Only:** No
**Approved:** 27-Sep-1994
**Renewed:** 27-Sep-2018
**Bypass:**
**Shutoffs:** (vv),xx,ooo,hhhh,pppp


2018 © University of Southern California

**Type:** DC
**Size:** 3/4
**Manual:** 8
**Approved:** 26-Feb-1991
**Shutoffs:** vv,xx,ooo,hhhh,pppp
**Manufacturer:** Watts
**Orientation:** H
**0.25% Pb:** No
**Renewed:** 26-Feb-2018
**Model:** 007M1QT
**Meters:**
**Spare Parts Only:** Yes
**Bypass:**

---

**Type:** DC
**Size:** 1
**Manual:** 8
**Approved:** 26-Feb-1991
**Shutoffs:** (vv),xx,ooo,hhhh,pppp
**Notes:** Upgraded to 9th Ed.
**Manufacturer:** Watts
**Orientation:** H
**0.25% Pb:** No
**Renewed:** 26-Feb-2018
**Model:** 007M1QT
**Meters:**
**Spare Parts Only:** No
**Bypass:**

---

**Type:** DC
**Size:** 1
**Manual:** 9
**Approved:** 18-May-1998
**Shutoffs:** (vv),xx,ooo,hhhh,pppp
**Notes:** Previous 8th Ed. Approval
**Manufacturer:** Watts
**Orientation:** H
**0.25% Pb:** No
**Renewed:** 18-May-2016
**Model:** 007M1QT
**Meters:**
**Spare Parts Only:** No
**Bypass:**

---

**Type:** DC
**Size:** 1
**Manual:** 9
**Approved:** 18-May-1998
**Shutoffs:** (vv),xx,ooo,hhhh,pppp
**Manufacturer:** Watts
**Orientation:** VU
**0.25% Pb:** No
**Renewed:** 18-May-2016
**Model:** 007M1QT
**Meters:**
**Spare Parts Only:** No
**Bypass:**

---

**Type:** DC
**Size:** 1 1/2
**Manual:** 8
**Approved:** 30-Jun-1992
**Shutoffs:** vv,xx,ooo,hhhh,pppp
**Manufacturer:** Watts
**Orientation:** H
**0.25% Pb:** No
**Renewed:** 30-Jun-2016
**Model:** 007M1QT
**Meters:**
**Spare Parts Only:** Yes
**Bypass:**

---

**Type:** DC
**Size:** 2
**Manual:** 8
**Approved:** 30-Jun-1992
**Shutoffs:** (vv),xx,ooo,hhhh,pppp
**Manufacturer:** Watts
**Orientation:** H
**0.25% Pb:** No
**Renewed:** 30-Jun-2016
**Model:** 007M1QT
**Meters:**
**Spare Parts Only:** No
**Bypass:**

**Type:** DC
**Size:** 2
**Manual:** 8
**Approved:** 08-Mar-1996
**Shutoffs:** (vv),xx,ooo,hhhh,pppp
**Manufacturer:** Watts
**Orientation:** VU
**0.25% Pb:** No
**Renewed:** 08-Mar-2017
**Model:** 007M1QT
**Meters:**
**Spare Parts Only:** No
**Bypass:**

---

**Type:** DC
**Size:** 1 1/4
**Manual:** 9
**Approved:** 01-Sep-2009
**Shutoffs:** (eeeee)
**Manufacturer:** Watts
**Orientation:** H
**0.25% Pb:** No
**Renewed:** 01-Sep-2018
**Model:** 007M2-FP
**Meters:**
**Spare Parts Only:** No
**Bypass:**

---

**Type:** DC
**Size:** 1 1/2
**Manual:** 9
**Approved:** 01-Sep-2009
**Shutoffs:** (eeeee)
**Manufacturer:** Watts
**Orientation:** H
**0.25% Pb:** No
**Renewed:** 01-Sep-2018
**Model:** 007M2-FP
**Meters:**
**Spare Parts Only:** No
**Bypass:**

---

**Type:** DC
**Size:** 1 1/4
**Manual:** 8
**Approved:** 09-Dec-1996
**Shutoffs:** (vv),xx,ooo,hhhh,pppp
**Manufacturer:** Watts
**Orientation:** H
**0.25% Pb:** No
**Renewed:** 09-Dec-2017
**Model:** 007M2PCQT
**Meters:**
**Spare Parts Only:** No
**Bypass:**

---

**Type:** DC
**Size:** 1 1/4
**Manual:** 8
**Approved:** 09-Dec-1996
**Shutoffs:** (vv),xx,ooo,hhhh,pppp
**Manufacturer:** Watts
**Orientation:** VU
**0.25% Pb:** No
**Renewed:** 09-Dec-2017
**Model:** 007M2PCQT
**Meters:**
**Spare Parts Only:** No
**Bypass:**

---

**Type:** DC
**Size:** 1 1/2
**Manual:** 8
**Approved:** 12-Sep-1994
**Shutoffs:** (vv),xx,ooo,hhhh,pppp
**Manufacturer:** Watts
**Orientation:** H
**0.25% Pb:** No
**Renewed:** 12-Sep-2018
**Model:** 007M2PCQT
**Meters:**
**Spare Parts Only:** No
**Bypass:**

---

**Type:** DC
**Size:** 3/4
**Manual:** 8
**Approved:** 05-Apr-1993
**Shutoffs:** (vv),xx,ooo,hhhh,pppp
**Manufacturer:** Watts
**Orientation:** H
**0.25% Pb:** No
**Renewed:** 05-Apr-2017
**Model:** 007M2QT
**Meters:**
**Spare Parts Only:** No
**Bypass:**


2018 © University of Southern California

**Type:** DC
**Size:** 3/4
**Manual:** 8
**Approved:** 27-Aug-1996
**Shutoffs:** (vv),xx,ooo,hhhh,pppp
**Manufacturer:** Watts
**Orientation:** VU
**0.25% Pb:** No
**Renewed:** 27-Aug-2017
**Model:** 007M2QT
**Meters:**
**Spare Parts Only:** No
**Bypass:**

---

**Type:** DC
**Size:** 1 1/4
**Manual:** 8
**Approved:** 01-Oct-1996
**Shutoffs:** (vv),xx,ooo,hhhh,pppp
**Manufacturer:** Watts
**Orientation:** H
**0.25% Pb:** No
**Renewed:** 01-Oct-2017
**Model:** 007M2QT
**Meters:**
**Spare Parts Only:** No
**Bypass:**

---

**Type:** DC
**Size:** 1 1/4
**Manual:** 8
**Approved:** 01-Oct-1996
**Shutoffs:** (vv),xx,ooo,hhhh,pppp
**Manufacturer:** Watts
**Orientation:** VU
**0.25% Pb:** No
**Renewed:** 01-Oct-2017
**Model:** 007M2QT
**Meters:**
**Spare Parts Only:** No
**Bypass:**

---

**Type:** DC
**Size:** 1 1/2
**Manual:** 8
**Approved:** 24-May-1994
**Shutoffs:** (vv),xx,ooo,hhhh,pppp
**Manufacturer:** Watts
**Orientation:** H
**0.25% Pb:** No
**Renewed:** 24-May-2018
**Model:** 007M2QT
**Meters:**
**Spare Parts Only:** No
**Bypass:**

---

**Type:** DC
**Size:** 1 1/2
**Manual:** 8
**Approved:** 11-Mar-1996
**Shutoffs:** (vv),xx,ooo,hhhh,pppp
**Manufacturer:** Watts
**Orientation:** VU
**0.25% Pb:** No
**Renewed:** 08-Mar-2017
**Model:** 007M2QT
**Meters:**
**Spare Parts Only:** No
**Bypass:**

---

**Type:** DC
**Size:** 3/4
**Manual:** 9
**Approved:** 01-Sep-2009
**Shutoffs:** (eeeee)
**Manufacturer:** Watts
**Orientation:** H
**0.25% Pb:** No
**Renewed:** 01-Sep-2018
**Model:** 007M3-FP
**Meters:**
**Spare Parts Only:** No
**Bypass:**

---

**Type:** DC
**Size:** 3/4
**Manual:** 9
**Approved:** 18-Oct-1999
**Shutoffs:** (vv),xx,ooo,hhhh,pppp
**Manufacturer:** Watts
**Orientation:** H
**0.25% Pb:** No
**Renewed:** 18-Oct-2017
**Model:** 007M3QT
**Meters:**
**Spare Parts Only:** No
**Bypass:**

**Type:** DC
**Size:** 3/4
**Manual:** 9
**Approved:** 18-Oct-1999
**Shutoffs:** (vv),xx,ooo,hhhh,pppp
**Manufacturer:** Watts
**Orientation:** VU
**0.25% Pb:** No
**Renewed:** 18-Oct-2017
**Model:** 007M3QT
**Meters:**
**Spare Parts Only:** No
**Bypass:**

---

**Type:** DC
**Size:** 1/2
**Manual:** 8
**Approved:** 17-Feb-1995
**Shutoffs:** (vv),xx,ooo,hhhh,pppp
**Manufacturer:** Watts
**Orientation:** H
**0.25% Pb:** No
**Renewed:** 17-Feb-2016
**Model:** 007PCQT
**Meters:**
**Spare Parts Only:** No
**Bypass:**

---

**Type:** DC
**Size:** 1 1/2
**Manual:** 8
**Approved:** 27-Sep-1994
**Shutoffs:** vv,xx,ooo,hhhh,pppp
**Manufacturer:** Watts
**Orientation:** H
**0.25% Pb:** No
**Renewed:** 27-Sep-2018
**Model:** 007PCQT
**Meters:**
**Spare Parts Only:** Yes
**Bypass:**

---

**Type:** DC
**Size:** 2
**Manual:** 8
**Approved:** 27-Sep-1994
**Shutoffs:** vv,xx,ooo,hhhh,pppp
**Manufacturer:** Watts
**Orientation:** H
**0.25% Pb:** No
**Renewed:** 27-Sep-2018
**Model:** 007PCQT
**Meters:**
**Spare Parts Only:** Yes
**Bypass:**

---

**Type:** DC
**Size:** 1/2
**Manual:** 8
**Approved:** 06-Dec-1993
**Shutoffs:** (vv),xx,ooo,hhhh,pppp,rrrrr
**Notes:** Upgraded to 9th Ed.
**Manufacturer:** Watts
**Orientation:** H
**0.25% Pb:** No
**Renewed:** 08-Dec-2017
**Model:** 007QT
**Meters:**
**Spare Parts Only:** No
**Bypass:**

---

**Type:** DC
**Size:** 1/2
**Manual:** 9
**Approved:** 16-Jun-1997
**Shutoffs:** (vv),xx,ooo,hhhh,pppp,rrrrr
**Notes:** Previous 8th Ed. Approval
**Manufacturer:** Watts
**Orientation:** H
**0.25% Pb:** No
**Renewed:** 16-Jun-2018
**Model:** 007QT
**Meters:**
**Spare Parts Only:** No
**Bypass:**


2018 © University of Southern California

**Type:** DC
**Size:** 1/2
**Manual:** 8
**Approved:** 19-Apr-1996
**Shutoffs:** pppp,rrrrr
**Notes:** Upgraded to 9th Ed.

**Manufacturer:** Watts
**Orientation:** VU
**0.25% Pb:** No
**Renewed:** 19-Apr-2017

**Model:** 007QT
**Meters:**
**Spare Parts Only:** No
**Bypass:**

---

**Type:** DC
**Size:** 1/2
**Manual:** 9
**Approved:** 16-Jun-1997
**Shutoffs:** (vv),xx,pppp,rrrrr
**Notes:** Previous 8th Ed. Approval

**Manufacturer:** Watts
**Orientation:** VU
**0.25% Pb:** No
**Renewed:** 16-Jun-2018

**Model:** 007QT
**Meters:**
**Spare Parts Only:** No
**Bypass:**

---

**Type:** DC
**Size:** 3/4
**Manual:** 7
**Approved:** 11-Jan-1988
**Shutoffs:** pppp,rrrrr

**Manufacturer:** Watts
**Orientation:** H
**0.25% Pb:** No
**Renewed:** 11-Jan-2018

**Model:** 007QT
**Meters:**
**Spare Parts Only:** Yes
**Bypass:**

---

**Type:** DC
**Size:** 1
**Manual:** 7
**Approved:** 11-Jan-1988
**Shutoffs:** pppp,rrrrr

**Manufacturer:** Watts
**Orientation:** H
**0.25% Pb:** No
**Renewed:** 11-Jan-2018

**Model:** 007QT
**Meters:**
**Spare Parts Only:** Yes
**Bypass:**

---

**Type:** DC
**Size:** 1 1/2
**Manual:** 7
**Approved:** 21-Jul-1988
**Shutoffs:** pppp,rrrrr
**Notes:** Upgraded to 9th Ed.

**Manufacturer:** Watts
**Orientation:** H
**0.25% Pb:** No
**Renewed:** 21-Jul-2018

**Model:** 007QT
**Meters:**
**Spare Parts Only:** Yes
**Bypass:**

---

**Type:** DC
**Size:** 2
**Manual:** 7
**Approved:** 21-Jul-1988
**Shutoffs:** pppp,rrrrr
**Notes:** Upgraded to 9th Ed.

**Manufacturer:** Watts
**Orientation:** H
**0.25% Pb:** No
**Renewed:** 21-Jul-2018

**Model:** 007QT
**Meters:**
**Spare Parts Only:** Yes
**Bypass:**

**Type:** DC
**Size:** 3/4
**Manual:** 8
**Approved:** 10-Dec-1993
**Shutoffs:** vv,xx,ooo,hhhh,pppp
**Manufacturer:** Watts
**Orientation:** H
**0.25% Pb:** No
**Renewed:** 10-Dec-2017
**Model:** 007SSM1PCQT
**Meters:**
**Spare Parts Only:** Yes
**Bypass:**

---

**Type:** DC
**Size:** 1
**Manual:** 8
**Approved:** 10-Dec-1993
**Shutoffs:** vv,xx,ooo,hhhh,pppp
**Manufacturer:** Watts
**Orientation:** H
**0.25% Pb:** No
**Renewed:** 10-Dec-2017
**Model:** 007SSM1PCQT
**Meters:**
**Spare Parts Only:** Yes
**Bypass:**

---

**Type:** DC
**Size:** 3/4
**Manual:** 8
**Approved:** 26-Feb-1991
**Shutoffs:** vv,xx,ooo,hhhh,pppp
**Manufacturer:** Watts
**Orientation:** H
**0.25% Pb:** No
**Renewed:** 26-Feb-2018
**Model:** 007SSM1QT
**Meters:**
**Spare Parts Only:** Yes
**Bypass:**

---

**Type:** DC
**Size:** 1
**Manual:** 8
**Approved:** 26-Feb-1991
**Shutoffs:** vv,xx,ooo,hhhh,pppp
**Manufacturer:** Watts
**Orientation:** H
**0.25% Pb:** No
**Renewed:** 26-Feb-2018
**Model:** 007SSM1QT
**Meters:**
**Spare Parts Only:** Yes
**Bypass:**

---

**Type:** DC
**Size:** 1 1/2
**Manual:** 8
**Approved:** 27-Sep-1994
**Shutoffs:** vv,xx,ooo,hhhh,pppp
**Manufacturer:** Watts
**Orientation:** H
**0.25% Pb:** No
**Renewed:** 27-Sep-2018
**Model:** 007SSPCQT
**Meters:**
**Spare Parts Only:** Yes
**Bypass:**

---

**Type:** DC
**Size:** 2
**Manual:** 8
**Approved:** 27-Sep-1994
**Shutoffs:** vv,xx,ooo,hhhh,pppp
**Manufacturer:** Watts
**Orientation:** H
**0.25% Pb:** No
**Renewed:** 27-Sep-2018
**Model:** 007SSPCQT
**Meters:**
**Spare Parts Only:** Yes
**Bypass:**

---

**Type:** DC
**Size:** 3/4
**Manual:** 7
**Approved:** 11-Jan-1988
**Shutoffs:** pppp
**Manufacturer:** Watts
**Orientation:** H
**0.25% Pb:** No
**Renewed:** 11-Jan-2018
**Model:** 007SSQT
**Meters:**
**Spare Parts Only:** Yes
**Bypass:**


2018 © University of Southern California

**Type:** DC
**Manufacturer:** Watts
**Model:** 007SSQT
**Size:** 1
**Orientation:** H
**Meters:**
**Manual:** 7
**0.25% Pb:** No
**Spare Parts Only:** Yes
**Approved:** 11-Jan-1988
**Renewed:** 11-Jan-2018
**Bypass:**
**Shutoffs:** pppp

---

**Type:** DC
**Manufacturer:** Watts
**Model:** 007SSQT
**Size:** 1 1/2
**Orientation:** H
**Meters:**
**Manual:** 7
**0.25% Pb:** No
**Spare Parts Only:** Yes
**Approved:** 21-Jul-1988
**Renewed:** 21-Jul-2018
**Bypass:**
**Shutoffs:** pppp

---

**Type:** DC
**Manufacturer:** Watts
**Model:** 007SSQT
**Size:** 2
**Orientation:** H
**Meters:**
**Manual:** 7
**0.25% Pb:** No
**Spare Parts Only:** Yes
**Approved:** 21-Jul-1988
**Renewed:** 21-Jul-2018
**Bypass:**
**Shutoffs:** pppp

---

**Type:** DC
**Manufacturer:** Watts
**Model:** 700
**Size:** 2 1/2
**Orientation:** H
**Meters:**
**Manual:** 5
**0.25% Pb:** No
**Spare Parts Only:** Yes
**Approved:** 10-Jan-1981
**Renewed:** 10-Jan-2017
**Bypass:**

---

**Type:** DC
**Manufacturer:** Watts
**Model:** 700
**Size:** 3
**Orientation:** H
**Meters:**
**Manual:** 5
**0.25% Pb:** No
**Spare Parts Only:** Yes
**Approved:** 10-Jan-1981
**Renewed:** 10-Jan-2017
**Bypass:**

---

**Type:** DC
**Manufacturer:** Watts
**Model:** 709
**Size:** 2 1/2
**Orientation:** H
**Meters:**
**Manual:** 7
**0.25% Pb:** No
**Spare Parts Only:** Yes
**Approved:** 12-Jun-1986
**Renewed:** 12-Jun-2016
**Bypass:**
**Shutoffs:** (oo),gg,hh,ll,mm,pp,tt,uu,ww,yy,ffff,gggg

---

**Type:** DC
**Manufacturer:** Watts
**Model:** 709
**Size:** 3
**Orientation:** H
**Meters:**
**Manual:** 7
**0.25% Pb:** No
**Spare Parts Only:** Yes
**Approved:** 12-Jun-1986
**Renewed:** 12-Jun-2016
**Bypass:**
**Shutoffs:** (oo),gg,hh,ll,mm,pp,tt,uu,ww,yy,eee,ffff,gggg

**Type:** DC **Manufacturer:** Watts **Model:** 709
**Size:** 4 **Orientation:** H **Meters:**
**Manual:** 6 **0.25% Pb:** No **Spare Parts Only:** Yes
**Approved:** 15-Jan-1982 **Renewed:** 15-Jan-2018 **Bypass:**
**Shutoffs:** (oo),gg,hh,ll,mm,pp,tt,uu,ww,yy,eee,ffff,gggg

---

**Type:** DC **Manufacturer:** Watts **Model:** 709
**Size:** 4 **Orientation:** VU **Meters:**
**Manual:** 8 **0.25% Pb:** No **Spare Parts Only:** Yes
**Approved:** 11-Mar-1996 **Renewed:** 08-Mar-2017 **Bypass:**
**Shutoffs:** (oo),gg,hh,ll,mm,pp,tt,uu,ww,yy,eee,ffff,gggg

---

**Type:** DC **Manufacturer:** Watts **Model:** 709
**Size:** 6 **Orientation:** H **Meters:**
**Manual:** 6 **0.25% Pb:** No **Spare Parts Only:** Yes
**Approved:** 18-May-1982 **Renewed:** 18-May-2018 **Bypass:**
**Shutoffs:** (oo),gg,hh,ll,mm,pp,tt,uu,ww,yy,eee,ffff,gggg

---

**Type:** DC **Manufacturer:** Watts **Model:** 709
**Size:** 6 **Orientation:** VU **Meters:**
**Manual:** 8 **0.25% Pb:** No **Spare Parts Only:** Yes
**Approved:** 05-Dec-1996 **Renewed:** 05-Dec-2017 **Bypass:**
**Shutoffs:** (oo),gg,hh,ll,mm,pp,tt,uu,ww,yy,eee,ffff,gggg

---

**Type:** DC **Manufacturer:** Watts **Model:** 709
**Size:** 8 **Orientation:** H **Meters:**
**Manual:** 6 **0.25% Pb:** No **Spare Parts Only:** Yes
**Approved:** 06-Jul-1981 **Renewed:** 06-Jul-2017 **Bypass:**
**Shutoffs:** (oo),gg,hh,ll,mm,pp,tt,uu,ww,yy,eee,ffff,gggg

---

**Type:** DC **Manufacturer:** Watts **Model:** 709
**Size:** 8 **Orientation:** VU **Meters:**
**Manual:** 8 **0.25% Pb:** No **Spare Parts Only:** Yes
**Approved:** 05-Dec-1996 **Renewed:** 05-Dec-2017 **Bypass:**
**Shutoffs:** (oo),gg,hh,ll,mm,pp,tt,uu,ww,yy,eee,ffff,gggg

---

**Type:** DC **Manufacturer:** Watts **Model:** 709
**Size:** 10 **Orientation:** H **Meters:**
**Manual:** 6 **0.25% Pb:** No **Spare Parts Only:** Yes
**Approved:** 16-Mar-1983 **Renewed:** 16-Mar-2016 **Bypass:**
**Shutoffs:** (oo),gg,hh,ll,mm,pp,tt,uu,ww,yy,eee,ffff,gggg


2018 © University of Southern California

**Type:** DC
**Manufacturer:** Watts
**Model:** 709
**Size:** 10
**Orientation:** VU
**Meters:**
**Manual:** 8
**0.25% Pb:** No
**Spare Parts Only:** Yes
**Approved:** 05-Dec-1996
**Renewed:** 05-Dec-2017
**Bypass:**
**Shutoffs:** (oo),gg,hh,ll,mm,pp,tt,uu,ww,yy,eee,ffff,gggg

---

**Type:** DC
**Manufacturer:** Watts
**Model:** 709BB
**Size:** 2 1/2
**Orientation:** H
**Meters:**
**Manual:** 6
**0.25% Pb:** No
**Spare Parts Only:** Yes
**Approved:** 20-Jul-1982
**Renewed:** 20-Jul-2018
**Bypass:**
**Shutoffs:** (oo),gg,hh,ll,mm,pp,tt,uu,yy,ffff,gggg

---

**Type:** DC
**Manufacturer:** Watts
**Model:** 709BB
**Size:** 3
**Orientation:** H
**Meters:**
**Manual:** 6
**0.25% Pb:** No
**Spare Parts Only:** Yes
**Approved:** 20-Jul-1982
**Renewed:** 20-Jul-2018
**Bypass:**
**Shutoffs:** (oo),gg,hh,ll,mm,pp,tt,uu,yy,ffff,gggg

---

**Type:** DC
**Manufacturer:** Watts
**Model:** 709QT
**Size:** 3/4
**Orientation:** H
**Meters:**
**Manual:** 6
**0.25% Pb:** No
**Spare Parts Only:** Yes
**Approved:** 04-Aug-1982
**Renewed:** 04-Aug-2018
**Bypass:**
**Shutoffs:** vv,xx,ooo,hhhh,pppp

---

**Type:** DC
**Manufacturer:** Watts
**Model:** 709QT
**Size:** 1
**Orientation:** H
**Meters:**
**Manual:** 6
**0.25% Pb:** No
**Spare Parts Only:** Yes
**Approved:** 04-Aug-1982
**Renewed:** 04-Aug-2018
**Bypass:**
**Shutoffs:** vv,xx,ooo,hhhh,pppp

---

**Type:** DC
**Manufacturer:** Watts
**Model:** 709QT
**Size:** 1 1/2
**Orientation:** H
**Meters:**
**Manual:** 6
**0.25% Pb:** No
**Spare Parts Only:** Yes
**Approved:** 27-Apr-1982
**Renewed:** 21-Apr-2018
**Bypass:**
**Shutoffs:** vv,xx,ooo,hhhh,pppp

---

**Type:** DC
**Manufacturer:** Watts
**Model:** 709QT
**Size:** 2
**Orientation:** H
**Meters:**
**Manual:** 6
**0.25% Pb:** No
**Spare Parts Only:** Yes
**Approved:** 27-Apr-1982
**Renewed:** 21-Apr-2018
**Bypass:**
**Shutoffs:** vv,xx,ooo,hhhh,pppp

**Type:** DC
**Size:** 1/2
**Manual:** 9
**Approved:** 04-Oct-2005
**Shutoffs:** (vv),xx,ooo,hhhh,pppp,rrrrr
**Manufacturer:** Watts
**Orientation:** VUVD
**0.25% Pb:** No
**Renewed:** 04-Oct-2017
**Model:** 719AQT
**Meters:**
**Spare Parts Only:** No
**Bypass:**

---

**Type:** DC
**Size:** 1
**Manual:** 9
**Approved:** 04-Oct-2005
**Shutoffs:** (vv),xx,ooo,hhhh,pppp,rrrrr
**Manufacturer:** Watts
**Orientation:** VUVD
**0.25% Pb:** No
**Renewed:** 04-Oct-2017
**Model:** 719AQT
**Meters:**
**Spare Parts Only:** No
**Bypass:**

---

**Type:** DC
**Size:** 1 1/4
**Manual:** 9
**Approved:** 04-Oct-2005
**Shutoffs:** (vv),xx,ooo,hhhh,pppp,rrrrr
**Manufacturer:** Watts
**Orientation:** VUVD
**0.25% Pb:** No
**Renewed:** 04-Oct-2017
**Model:** 719AQT
**Meters:**
**Spare Parts Only:** No
**Bypass:**

---

**Type:** DC
**Size:** 1 1/2
**Manual:** 9
**Approved:** 04-Oct-2005
**Shutoffs:** (vv),xx,ooo,hhhh,pppp,rrrrr
**Manufacturer:** Watts
**Orientation:** VUVD
**0.25% Pb:** No
**Renewed:** 04-Oct-2017
**Model:** 719AQT
**Meters:**
**Spare Parts Only:** No
**Bypass:**

---

**Type:** DC
**Size:** 2
**Manual:** 9
**Approved:** 04-Oct-2005
**Shutoffs:** (vv),xx,ooo,hhhh,pppp,rrrrr
**Manufacturer:** Watts
**Orientation:** VUVD
**0.25% Pb:** No
**Renewed:** 04-Oct-2017
**Model:** 719AQT
**Meters:**
**Spare Parts Only:** No
**Bypass:**

---

**Type:** DC
**Size:** 1/2
**Manual:** 9
**Approved:** 03-Jul-2013
**Shutoffs:** (vv),xx,ooo,hhhh,pppp
**Manufacturer:** Watts
**Orientation:** VUVD
**0.25% Pb:** No
**Renewed:** 03-Jul-2016
**Model:** 719AQTR10
**Meters:**
**Spare Parts Only:** Yes
**Bypass:**

---

**Type:** DC
**Size:** 3/4
**Manual:** 9
**Approved:** 03-Jul-2013
**Shutoffs:** (vv),xx,ooo,hhhh,pppp
**Manufacturer:** Watts
**Orientation:** VUVD
**0.25% Pb:** No
**Renewed:** 03-Jul-2016
**Model:** 719AQTR10
**Meters:**
**Spare Parts Only:** Yes
**Bypass:**


2018 © University of Southern California

**Type:** DC
**Size:** 1/2
**Manual:** 9
**Approved:** 04-Oct-2005
**Shutoffs:** (vv),xx,ooo,hhhh,pppp,rrrrr
**Manufacturer:** Watts
**Orientation:** H
**0.25% Pb:** No
**Renewed:** 04-Oct-2017
**Model:** 719QT
**Meters:**
**Spare Parts Only:** No
**Bypass:**

---

**Type:** DC
**Size:** 1/2
**Manual:** 9
**Approved:** 04-Oct-2005
**Shutoffs:** (vv),xx,ooo,hhhh,pppp,rrrrr
**Manufacturer:** Watts
**Orientation:** VD
**0.25% Pb:** No
**Renewed:** 04-Oct-2017
**Model:** 719QT
**Meters:**
**Spare Parts Only:** No
**Bypass:**

---

**Type:** DC
**Size:** 1/2
**Manual:** 9
**Approved:** 04-Oct-2005
**Shutoffs:** (vv),xx,ooo,hhhh,pppp,rrrrr
**Manufacturer:** Watts
**Orientation:** VU
**0.25% Pb:** No
**Renewed:** 04-Oct-2017
**Model:** 719QT
**Meters:**
**Spare Parts Only:** No
**Bypass:**

---

**Type:** DC
**Size:** 3/4
**Manual:** 9
**Approved:** 04-Oct-2005
**Shutoffs:** (vv),xx,ooo,hhhh,pppp,rrrrr
**Manufacturer:** Watts
**Orientation:** H
**0.25% Pb:** No
**Renewed:** 04-Oct-2017
**Model:** 719QT
**Meters:**
**Spare Parts Only:** No
**Bypass:**

---

**Type:** DC
**Size:** 3/4
**Manual:** 9
**Approved:** 04-Oct-2005
**Shutoffs:** (vv),xx,ooo,hhhh,pppp,rrrrr
**Manufacturer:** Watts
**Orientation:** VD
**0.25% Pb:** No
**Renewed:** 04-Oct-2017
**Model:** 719QT
**Meters:**
**Spare Parts Only:** No
**Bypass:**

---

**Type:** DC
**Size:** 3/4
**Manual:** 9
**Approved:** 04-Oct-2005
**Shutoffs:** (vv),xx,ooo,hhhh,pppp,rrrrr
**Manufacturer:** Watts
**Orientation:** VU
**0.25% Pb:** No
**Renewed:** 04-Oct-2017
**Model:** 719QT
**Meters:**
**Spare Parts Only:** No
**Bypass:**

---

**Type:** DC
**Size:** 1
**Manual:** 9
**Approved:** 04-Oct-2005
**Shutoffs:** (vv),xx,ooo,hhhh,pppp,rrrrr
**Manufacturer:** Watts
**Orientation:** H
**0.25% Pb:** No
**Renewed:** 04-Oct-2017
**Model:** 719QT
**Meters:**
**Spare Parts Only:** No
**Bypass:**

**Type:** DC
**Size:** 1
**Manual:** 9
**Approved:** 04-Oct-2005
**Shutoffs:** (vv),xx,ooo,hhhh,pppp,rrrrr
**Manufacturer:** Watts
**Orientation:** VD
**0.25% Pb:** No
**Renewed:** 04-Oct-2017
**Model:** 719QT
**Meters:**
**Spare Parts Only:** No
**Bypass:**

---

**Type:** DC
**Size:** 1
**Manual:** 9
**Approved:** 04-Oct-2005
**Shutoffs:** (vv),xx,ooo,hhhh,pppp,rrrrr
**Manufacturer:** Watts
**Orientation:** VU
**0.25% Pb:** No
**Renewed:** 04-Oct-2017
**Model:** 719QT
**Meters:**
**Spare Parts Only:** No
**Bypass:**

---

**Type:** DC
**Size:** 1 1/4
**Manual:** 9
**Approved:** 04-Oct-2005
**Shutoffs:** (vv),xx,ooo,hhhh,pppp,rrrrr
**Manufacturer:** Watts
**Orientation:** H
**0.25% Pb:** No
**Renewed:** 04-Oct-2017
**Model:** 719QT
**Meters:**
**Spare Parts Only:** No
**Bypass:**

---

**Type:** DC
**Size:** 1 1/4
**Manual:** 9
**Approved:** 04-Oct-2005
**Shutoffs:** (vv),xx,ooo,hhhh,pppp,rrrrr
**Manufacturer:** Watts
**Orientation:** VD
**0.25% Pb:** No
**Renewed:** 04-Oct-2017
**Model:** 719QT
**Meters:**
**Spare Parts Only:** No
**Bypass:**

---

**Type:** DC
**Size:** 1 1/4
**Manual:** 9
**Approved:** 04-Oct-2005
**Shutoffs:** (vv),xx,ooo,hhhh,pppp,rrrrr
**Manufacturer:** Watts
**Orientation:** VU
**0.25% Pb:** No
**Renewed:** 04-Oct-2017
**Model:** 719QT
**Meters:**
**Spare Parts Only:** No
**Bypass:**

---

**Type:** DC
**Size:** 1 1/2
**Manual:** 9
**Approved:** 04-Oct-2005
**Shutoffs:** (vv),xx,ooo,hhhh,pppp,rrrrr
**Manufacturer:** Watts
**Orientation:** H
**0.25% Pb:** No
**Renewed:** 04-Oct-2017
**Model:** 719QT
**Meters:**
**Spare Parts Only:** No
**Bypass:**

---

**Type:** DC
**Size:** 1 1/2
**Manual:** 9
**Approved:** 04-Oct-2005
**Shutoffs:** (vv),xx,ooo,hhhh,pppp,rrrrr
**Manufacturer:** Watts
**Orientation:** VD
**0.25% Pb:** No
**Renewed:** 04-Oct-2017
**Model:** 719QT
**Meters:**
**Spare Parts Only:** No
**Bypass:**


2018 © University of Southern California

**Type:** DC
**Size:** 1 1/2
**Manual:** 9
**Approved:** 04-Oct-2005
**Shutoffs:** (vv),xx,ooo,hhhh,pppp,rrrrr
**Manufacturer:** Watts
**Orientation:** VU
**0.25% Pb:** No
**Renewed:** 04-Oct-2017
**Model:** 719QT
**Meters:**
**Spare Parts Only:** No
**Bypass:**

---

**Type:** DC
**Size:** 2
**Manual:** 9
**Approved:** 04-Oct-2005
**Shutoffs:** (vv),xx,ooo,hhhh,pppp,rrrrr
**Manufacturer:** Watts
**Orientation:** H
**0.25% Pb:** No
**Renewed:** 04-Oct-2017
**Model:** 719QT
**Meters:**
**Spare Parts Only:** No
**Bypass:**

---

**Type:** DC
**Size:** 2
**Manual:** 9
**Approved:** 04-Oct-2005
**Shutoffs:** (vv),xx,ooo,hhhh,pppp,rrrrr
**Manufacturer:** Watts
**Orientation:** VD
**0.25% Pb:** No
**Renewed:** 04-Oct-2017
**Model:** 719QT
**Meters:**
**Spare Parts Only:** No
**Bypass:**

---

**Type:** DC
**Size:** 2
**Manual:** 9
**Approved:** 04-Oct-2005
**Shutoffs:** (vv),xx,ooo,hhhh,pppp,rrrrr
**Manufacturer:** Watts
**Orientation:** VU
**0.25% Pb:** No
**Renewed:** 04-Oct-2017
**Model:** 719QT
**Meters:**
**Spare Parts Only:** No
**Bypass:**

---

**Type:** DC
**Size:** 1/2
**Manual:** 9
**Approved:** 04-Oct-2005
**Shutoffs:** (vv),xx,ooo,hhhh,pppp,rrrrrr
**Manufacturer:** Watts
**Orientation:** H
**0.25% Pb:** No
**Renewed:** 04-Oct-2017
**Model:** 719QTR10
**Meters:**
**Spare Parts Only:** Yes
**Bypass:**

---

**Type:** DC
**Size:** 1/2
**Manual:** 9
**Approved:** 04-Oct-2005
**Shutoffs:** (vv),xx,ooo,hhhh,pppp,rrrrrr
**Manufacturer:** Watts
**Orientation:** VD
**0.25% Pb:** No
**Renewed:** 04-Oct-2017
**Model:** 719QTR10
**Meters:**
**Spare Parts Only:** Yes
**Bypass:**

---

**Type:** DC
**Size:** 1/2
**Manual:** 9
**Approved:** 04-Oct-2005
**Shutoffs:** (vv),xx,ooo,hhhh,pppp,rrrrrr
**Manufacturer:** Watts
**Orientation:** VU
**0.25% Pb:** No
**Renewed:** 04-Oct-2017
**Model:** 719QTR10
**Meters:**
**Spare Parts Only:** Yes
**Bypass:**

**Type:** DC
**Manufacturer:** Watts
**Model:** 719QTR10
**Size:** 3/4
**Orientation:** H
**Meters:**
**Manual:** 9
**0.25% Pb:** No
**Spare Parts Only:** Yes
**Approved:** 04-Oct-2005
**Renewed:** 04-Oct-2017
**Bypass:**
**Shutoffs:** (vv),xx,ooo,hhhh,pppp,rrrrrr

---

**Type:** DC
**Manufacturer:** Watts
**Model:** 719QTR10
**Size:** 3/4
**Orientation:** VD
**Meters:**
**Manual:** 9
**0.25% Pb:** No
**Spare Parts Only:** Yes
**Approved:** 04-Oct-2005
**Renewed:** 04-Oct-2017
**Bypass:**
**Shutoffs:** (vv),xx,ooo,hhhh,pppp,rrrrrr

---

**Type:** DC
**Manufacturer:** Watts
**Model:** 719QTR10
**Size:** 3/4
**Orientation:** VU
**Meters:**
**Manual:** 9
**0.25% Pb:** No
**Spare Parts Only:** Yes
**Approved:** 04-Oct-2005
**Renewed:** 04-Oct-2017
**Bypass:**
**Shutoffs:** (vv),xx,ooo,hhhh,pppp,rrrrrr

---

**Type:** DC
**Manufacturer:** Watts
**Model:** 757
**Size:** 2 1/2
**Orientation:** H
**Meters:**
**Manual:** 9
**0.25% Pb:** No
**Spare Parts Only:** No
**Approved:** 29-Sep-2004
**Renewed:** 29-Sep-2016
**Bypass:**
**Shutoffs:** (ppp),qqq,aaaa,bbbb

---

**Type:** DC
**Manufacturer:** Watts
**Model:** 757
**Size:** 2 1/2
**Orientation:** H
**Meters:**
**Manual:** 9
**0.25% Pb:** Yes
**Spare Parts Only:** No
**Approved:** 29-Sep-2004
**Renewed:** 29-Sep-2016
**Bypass:**
**Shutoffs:** yyy,zzz,dddd,eeee,gggg,kkkk,llll,mmmm,nnnn,nnnnn

---

**Type:** DC
**Manufacturer:** Watts
**Model:** 757
**Size:** 2 1/2
**Orientation:** VU
**Meters:**
**Manual:** 9
**0.25% Pb:** No
**Spare Parts Only:** No
**Approved:** 29-Sep-2004
**Renewed:** 29-Sep-2016
**Bypass:**
**Shutoffs:** (ppp),qqq,aaaa,bbbb

---

**Type:** DC
**Manufacturer:** Watts
**Model:** 757
**Size:** 2 1/2
**Orientation:** VU
**Meters:**
**Manual:** 9
**0.25% Pb:** Yes
**Spare Parts Only:** No
**Approved:** 29-Sep-2004
**Renewed:** 29-Sep-2016
**Bypass:**
**Shutoffs:** yyy,zzz,dddd,eeee,gggg,kkkk,llll,mmmm,nnnn,nnnnn


2018 © University of Southern California

**Type:** DC
**Manufacturer:** Watts
**Model:** 757
**Size:** 3
**Orientation:** H
**Meters:**
**Manual:** 9
**0.25% Pb:** No
**Spare Parts Only:** No
**Approved:** 29-Sep-2004
**Renewed:** 29-Sep-2016
**Bypass:**
**Shutoffs:** (ppp),qqq,aaaa,bbbb

---

**Type:** DC
**Manufacturer:** Watts
**Model:** 757
**Size:** 3
**Orientation:** H
**Meters:**
**Manual:** 9
**0.25% Pb:** Yes
**Spare Parts Only:** No
**Approved:** 29-Sep-2004
**Renewed:** 29-Sep-2016
**Bypass:**
**Shutoffs:** yyy,zzz,dddd,eeee,gggg,kkkk,llll,mmmm,nnnn,nnnnn

---

**Type:** DC
**Manufacturer:** Watts
**Model:** 757
**Size:** 3
**Orientation:** VU
**Meters:**
**Manual:** 9
**0.25% Pb:** No
**Spare Parts Only:** No
**Approved:** 29-Sep-2004
**Renewed:** 29-Sep-2016
**Bypass:**
**Shutoffs:** (ppp),qqq,aaaa,bbbb

---

**Type:** DC
**Manufacturer:** Watts
**Model:** 757
**Size:** 3
**Orientation:** VU
**Meters:**
**Manual:** 9
**0.25% Pb:** Yes
**Spare Parts Only:** No
**Approved:** 29-Sep-2004
**Renewed:** 29-Sep-2016
**Bypass:**
**Shutoffs:** yyy,zzz,dddd,eeee,gggg,kkkk,llll,mmmm,nnnn,nnnnn

---

**Type:** DC
**Manufacturer:** Watts
**Model:** 757
**Size:** 4
**Orientation:** H
**Meters:**
**Manual:** 9
**0.25% Pb:** No
**Spare Parts Only:** No
**Approved:** 29-Sep-2004
**Renewed:** 29-Sep-2016
**Bypass:**
**Shutoffs:** (ppp),qqq,aaaa,bbbb

---

**Type:** DC
**Manufacturer:** Watts
**Model:** 757
**Size:** 4
**Orientation:** H
**Meters:**
**Manual:** 9
**0.25% Pb:** Yes
**Spare Parts Only:** No
**Approved:** 29-Sep-2004
**Renewed:** 29-Sep-2016
**Bypass:**
**Shutoffs:** yyy,zzz,dddd,eeee,gggg,kkkk,llll,mmmm,nnnn,nnnnn

---

**Type:** DC
**Manufacturer:** Watts
**Model:** 757
**Size:** 4
**Orientation:** VU
**Meters:**
**Manual:** 9
**0.25% Pb:** No
**Spare Parts Only:** No
**Approved:** 29-Sep-2004
**Renewed:** 29-Sep-2016
**Bypass:**
**Shutoffs:** (ppp),qqq,aaaa,bbbb

**Type:** DC
**Manufacturer:** Watts
**Model:** 757
**Size:** 4
**Orientation:** VU
**Meters:**
**Manual:** 9
**0.25% Pb:** Yes
**Spare Parts Only:** No
**Approved:** 29-Sep-2004
**Renewed:** 29-Sep-2016
**Bypass:**
**Shutoffs:** yyy,zzz,dddd,eeee,gggg,kkkk,llll,mmmm,nnnn,nnnnn

---

**Type:** DC
**Manufacturer:** Watts
**Model:** 757
**Size:** 6
**Orientation:** H
**Meters:**
**Manual:** 9
**0.25% Pb:** No
**Spare Parts Only:** No
**Approved:** 21-Apr-2006
**Renewed:** 21-Apr-2018
**Bypass:**
**Shutoffs:** (ppp),qqq,aaaa,bbbb

---

**Type:** DC
**Manufacturer:** Watts
**Model:** 757
**Size:** 6
**Orientation:** H
**Meters:**
**Manual:** 9
**0.25% Pb:** Yes
**Spare Parts Only:** No
**Approved:** 21-Apr-2006
**Renewed:** 21-Apr-2018
**Bypass:**
**Shutoffs:** yyy,zzz,dddd,eeee,gggg,kkkk,llll,mmmm,nnnn,nnnnn

---

**Type:** DC
**Manufacturer:** Watts
**Model:** 757
**Size:** 6
**Orientation:** VU
**Meters:**
**Manual:** 9
**0.25% Pb:** No
**Spare Parts Only:** No
**Approved:** 21-Apr-2006
**Renewed:** 21-Apr-2018
**Bypass:**
**Shutoffs:** (ppp),qqq,aaaa,bbbb

---

**Type:** DC
**Manufacturer:** Watts
**Model:** 757
**Size:** 6
**Orientation:** VU
**Meters:**
**Manual:** 9
**0.25% Pb:** Yes
**Spare Parts Only:** No
**Approved:** 21-Apr-2006
**Renewed:** 21-Apr-2018
**Bypass:**
**Shutoffs:** yyy,zzz,dddd,eeee,gggg,kkkk,llll,mmmm,nnnn,nnnnn

---

**Type:** DC
**Manufacturer:** Watts
**Model:** 757
**Size:** 8
**Orientation:** H
**Meters:**
**Manual:** 9
**0.25% Pb:** No
**Spare Parts Only:** No
**Approved:** 16-Sep-2004
**Renewed:** 16-Sep-2016
**Bypass:**
**Shutoffs:** (ppp),qqq,aaaa,bbbb

---

**Type:** DC
**Manufacturer:** Watts
**Model:** 757
**Size:** 8
**Orientation:** H
**Meters:**
**Manual:** 9
**0.25% Pb:** Yes
**Spare Parts Only:** No
**Approved:** 16-Sep-2004
**Renewed:** 16-Sep-2016
**Bypass:**
**Shutoffs:** yyy,zzz,dddd,eeee,gggg,kkkk,llll,mmmm,nnnn,nnnnn


2018 © University of Southern California

**Type:** DC
**Manufacturer:** Watts
**Model:** 757
**Size:** 8
**Orientation:** VU
**Meters:**
**Manual:** 9
**0.25% Pb:** No
**Spare Parts Only:** No
**Approved:** 10-Feb-2006
**Renewed:** 10-Feb-2018
**Bypass:**
**Shutoffs:** (ppp),qqq,aaaa,bbbb

---

**Type:** DC
**Manufacturer:** Watts
**Model:** 757
**Size:** 8
**Orientation:** VU
**Meters:**
**Manual:** 9
**0.25% Pb:** Yes
**Spare Parts Only:** No
**Approved:** 10-Feb-2006
**Renewed:** 10-Feb-2018
**Bypass:**
**Shutoffs:** yyy,zzz,dddd,eeee,gggg,kkkk,llll,mmmm,nnnn,nnnnn

---

**Type:** DC
**Manufacturer:** Watts
**Model:** 757
**Size:** 10
**Orientation:** H
**Meters:**
**Manual:** 9
**0.25% Pb:** No
**Spare Parts Only:** No
**Approved:** 02-May-2008
**Renewed:** 02-May-2017
**Bypass:**
**Shutoffs:** (ppp),qqq,aaaa,bbbb

---

**Type:** DC
**Manufacturer:** Watts
**Model:** 757
**Size:** 10
**Orientation:** H
**Meters:**
**Manual:** 9
**0.25% Pb:** Yes
**Spare Parts Only:** No
**Approved:** 02-May-2008
**Renewed:** 02-May-2017
**Bypass:**
**Shutoffs:** yyy,zzz,dddd,eeee,gggg,kkkk,llll,mmmm,nnnn,nnnnn

---

**Type:** DC
**Manufacturer:** Watts
**Model:** 757
**Size:** 10
**Orientation:** VU
**Meters:**
**Manual:** 9
**0.25% Pb:** No
**Spare Parts Only:** No
**Approved:** 02-May-2008
**Renewed:** 02-May-2017
**Bypass:**
**Shutoffs:** (ppp),qqq,aaaa,bbbb

---

**Type:** DC
**Manufacturer:** Watts
**Model:** 757
**Size:** 10
**Orientation:** VU
**Meters:**
**Manual:** 9
**0.25% Pb:** Yes
**Spare Parts Only:** No
**Approved:** 02-May-2008
**Renewed:** 02-May-2017
**Bypass:**
**Shutoffs:** yyy,zzz,dddd,eeee,gggg,kkkk,llll,mmmm,nnnn,nnnnn

---

**Type:** DC
**Manufacturer:** Watts
**Model:** 757a
**Size:** 2 1/2
**Orientation:** H
**Meters:**
**Manual:** 9
**0.25% Pb:** No
**Spare Parts Only:** No
**Approved:** 07-Oct-2002
**Renewed:** 07-Oct-2017
**Bypass:**
**Shutoffs:** (ppp),qqq,yyy,zzz,aaaa,bbbb,dddd,eeee,gggg,kkkk,llll,mmmm,nnnn,nnnnn

**Type:** DC **Manufacturer:** Watts **Model:** 757a
**Size:** 2 1/2 **Orientation:** VU **Meters:**
**Manual:** 9 **0.25% Pb:** No **Spare Parts Only:** No
**Approved:** 07-Oct-2002 **Renewed:** 07-Oct-2017 **Bypass:**
**Shutoffs:** (ppp),qqq,yyy,zzz,aaaa,bbbb,dddd,eeee,gggg,kkkk,llll,mmmm,nnnn,nnnnn

---

**Type:** DC **Manufacturer:** Watts **Model:** 757a
**Size:** 3 **Orientation:** H **Meters:**
**Manual:** 9 **0.25% Pb:** No **Spare Parts Only:** No
**Approved:** 07-Oct-2002 **Renewed:** 07-Oct-2017 **Bypass:**
**Shutoffs:** (ppp),qqq,yyy,zzz,aaaa,bbbb,dddd,eeee,gggg,kkkk,llll,mmmm,nnnn,nnnnn

---

**Type:** DC **Manufacturer:** Watts **Model:** 757a
**Size:** 3 **Orientation:** VU **Meters:**
**Manual:** 9 **0.25% Pb:** No **Spare Parts Only:** No
**Approved:** 07-Oct-2002 **Renewed:** 07-Oct-2017 **Bypass:**
**Shutoffs:** (ppp),qqq,yyy,zzz,aaaa,bbbb,dddd,eeee,gggg,kkkk,llll,mmmm,nnnn,nnnnn

---

**Type:** DC **Manufacturer:** Watts **Model:** 757a
**Size:** 4 **Orientation:** H **Meters:**
**Manual:** 9 **0.25% Pb:** No **Spare Parts Only:** No
**Approved:** 07-Oct-2002 **Renewed:** 07-Oct-2017 **Bypass:**
**Shutoffs:** (ppp),qqq,yyy,zzz,aaaa,bbbb,dddd,eeee,gggg,kkkk,llll,mmmm,nnnn,nnnnn

---

**Type:** DC **Manufacturer:** Watts **Model:** 757a
**Size:** 4 **Orientation:** VU **Meters:**
**Manual:** 9 **0.25% Pb:** No **Spare Parts Only:** No
**Approved:** 07-Oct-2002 **Renewed:** 07-Oct-2017 **Bypass:**
**Shutoffs:** (ppp),qqq,yyy,zzz,aaaa,bbbb,dddd,eeee,gggg,kkkk,llll,mmmm,nnnn,nnnnn

---

**Type:** DC **Manufacturer:** Watts **Model:** 757a
**Size:** 6 **Orientation:** H **Meters:**
**Manual:** 9 **0.25% Pb:** No **Spare Parts Only:** No
**Approved:** 03-Jul-2003 **Renewed:** 03-Jul-2018 **Bypass:**
**Shutoffs:** (ppp),qqq,yyy,zzz,aaaa,bbbb,dddd,eeee,gggg,kkkk,llll,mmmm,nnnn,nnnnn

---

**Type:** DC **Manufacturer:** Watts **Model:** 757a
**Size:** 6 **Orientation:** VU **Meters:**
**Manual:** 9 **0.25% Pb:** No **Spare Parts Only:** No
**Approved:** 03-Jul-2003 **Renewed:** 03-Jul-2018 **Bypass:**
**Shutoffs:** (ppp),qqq,yyy,zzz,aaaa,bbbb,dddd,eeee,gggg,kkkk,llll,mmmm,nnnn,nnnnn


2018 © University of Southern California

**Type:** DC
**Manufacturer:** Watts
**Model:** 757N
**Size:** 2 1/2
**Orientation:** VUVD
**Meters:**
**Manual:** 9
**0.25% Pb:** No
**Spare Parts Only:** No
**Approved:** 07-Apr-2009
**Renewed:** 07-Apr-2018
**Bypass:**
**Shutoffs:** (ppp),qqq,nnnnn

---

**Type:** DC
**Manufacturer:** Watts
**Model:** 757N
**Size:** 2 1/2
**Orientation:** VUVD
**Meters:**
**Manual:** 9
**0.25% Pb:** Yes
**Spare Parts Only:** No
**Approved:** 07-Apr-2009
**Renewed:** 07-Apr-2018
**Bypass:**
**Shutoffs:** yyy,zzz,dddd,eeee,dddd,gggg,kkkk,llll,mmmm,nnnn

---

**Type:** DC
**Manufacturer:** Watts
**Model:** 757N
**Size:** 3
**Orientation:** VUVD
**Meters:**
**Manual:** 9
**0.25% Pb:** No
**Spare Parts Only:** No
**Approved:** 07-Apr-2009
**Renewed:** 07-Apr-2018
**Bypass:**
**Shutoffs:** (ppp),qqq,nnnnn

---

**Type:** DC
**Manufacturer:** Watts
**Model:** 757N
**Size:** 3
**Orientation:** VUVD
**Meters:**
**Manual:** 9
**0.25% Pb:** Yes
**Spare Parts Only:** No
**Approved:** 07-Apr-2009
**Renewed:** 07-Apr-2018
**Bypass:**
**Shutoffs:** yyy,zzz,dddd,eeee,dddd,gggg,kkkk,llll,mmmm,nnnn

---

**Type:** DC
**Manufacturer:** Watts
**Model:** 757N
**Size:** 4
**Orientation:** VUVD
**Meters:**
**Manual:** 9
**0.25% Pb:** No
**Spare Parts Only:** No
**Approved:** 07-Apr-2009
**Renewed:** 07-Apr-2018
**Bypass:**
**Shutoffs:** (ppp),qqq,nnnnn

---

**Type:** DC
**Manufacturer:** Watts
**Model:** 757N
**Size:** 4
**Orientation:** VUVD
**Meters:**
**Manual:** 9
**0.25% Pb:** Yes
**Spare Parts Only:** No
**Approved:** 07-Apr-2009
**Renewed:** 07-Apr-2018
**Bypass:**
**Shutoffs:** yyy,zzz,dddd,eeee,dddd,gggg,kkkk,llll,mmmm,nnnn

---

**Type:** DC
**Manufacturer:** Watts
**Model:** 757N
**Size:** 6
**Orientation:** VUVD
**Meters:**
**Manual:** 9
**0.25% Pb:** No
**Spare Parts Only:** No
**Approved:** 07-Apr-2009
**Renewed:** 07-Apr-2018
**Bypass:**
**Shutoffs:** (ppp),qqq,nnnnn

**Type:** DC **Manufacturer:** Watts **Model:** 757N
**Size:** 6 **Orientation:** VUVD **Meters:**
**Manual:** 9 **0.25% Pb:** Yes **Spare Parts Only:** No
**Approved:** 07-Apr-2009 **Renewed:** 07-Apr-2018 **Bypass:**
**Shutoffs:** yyy,zzz,dddd,eeee,dddd,gggg,kkkk,llll,mmmm,nnnn

---

**Type:** DC **Manufacturer:** Watts **Model:** 757N
**Size:** 8 **Orientation:** VUVD **Meters:**
**Manual:** 9 **0.25% Pb:** No **Spare Parts Only:** No
**Approved:** 03-Jan-2013 **Renewed:** 03-Jan-2016 **Bypass:**
**Shutoffs:** ppp,qqq,aaaa,bbbb

---

**Type:** DC **Manufacturer:** Watts **Model:** 757N
**Size:** 8 **Orientation:** VUVD **Meters:**
**Manual:** 9 **0.25% Pb:** Yes **Spare Parts Only:** No
**Approved:** 03-Jan-2013 **Renewed:** 03-Jan-2016 **Bypass:**
**Shutoffs:** yyy, zzz,dddd,eeee,gggg,kkkk,llll,mmmm,nnnn

---

**Type:** DC **Manufacturer:** Watts **Model:** 757N
**Size:** 10 **Orientation:** VUVD **Meters:**
**Manual:** 9 **0.25% Pb:** No **Spare Parts Only:** No
**Approved:** 01-Sep-2009 **Renewed:** 01-Sep-2018 **Bypass:**
**Shutoffs:** (ppp),qqq

---

**Type:** DC **Manufacturer:** Watts **Model:** 757N
**Size:** 10 **Orientation:** VUVD **Meters:**
**Manual:** 9 **0.25% Pb:** Yes **Spare Parts Only:** No
**Approved:** 01-Sep-2009 **Renewed:** 01-Sep-2018 **Bypass:**
**Shutoffs:** yyy,zzz,dddd,eeee,dddd,gggg,kkkk,llll,mmmm,nnnn

---

**Type:** DC **Manufacturer:** Watts **Model:** 757Na
**Size:** 2 1/2 **Orientation:** VUVD **Meters:**
**Manual:** 9 **0.25% Pb:** No **Spare Parts Only:** No
**Approved:** 20-Mar-2003 **Renewed:** 20-Mar-2018 **Bypass:**
**Shutoffs:** (ppp),qqq,yyy,zzz,aaaa,bbbb,dddd,eeee,gggg,kkkk,llll,mmmm,nnnn,nnnnn

---

**Type:** DC **Manufacturer:** Watts **Model:** 757Na
**Size:** 3 **Orientation:** VUVD **Meters:**
**Manual:** 9 **0.25% Pb:** No **Spare Parts Only:** No
**Approved:** 20-Mar-2003 **Renewed:** 20-Mar-2018 **Bypass:**
**Shutoffs:** (ppp),qqq,yyy,zzz,aaaa,bbbb,dddd,eeee,gggg,kkkk,llll,mmmm,nnnn,nnnnn


2018 © University of Southern California

**Type:** DC
**Manufacturer:** Watts
**Model:** 757Na
**Size:** 4
**Orientation:** VUVD
**Meters:**
**Manual:** 9
**0.25% Pb:** No
**Spare Parts Only:** No
**Approved:** 20-Mar-2003
**Renewed:** 20-Mar-2018
**Bypass:**
**Shutoffs:** (ppp),qqq,yyy,zzz,aaaa,bbbb,dddd,eeee,gggg,kkkk,llll,mmmm,nnnn,nnnnn

---

**Type:** DC
**Manufacturer:** Watts
**Model:** 757Na
**Size:** 6
**Orientation:** VUVD
**Meters:**
**Manual:** 9
**0.25% Pb:** No
**Spare Parts Only:** No
**Approved:** 03-Jul-2003
**Renewed:** 03-Jul-2018
**Bypass:**
**Shutoffs:** (ppp),qqq,yyy,zzz,aaaa,bbbb,dddd,eeee,gggg,kkkk,llll,mmmm,nnnn,nnnnn

---

**Type:** DC
**Manufacturer:** Watts
**Model:** 757NQT
**Size:** 2 1/2
**Orientation:** VUVD
**Meters:**
**Manual:** 9
**0.25% Pb:** Yes
**Spare Parts Only:** No
**Approved:** 04-Dec-2009
**Renewed:** 04-Dec-2015
**Bypass:**
**Shutoffs:** fffff

---

**Type:** DC
**Manufacturer:** Watts
**Model:** 757NQT
**Size:** 3
**Orientation:** VUVD
**Meters:**
**Manual:** 9
**0.25% Pb:** Yes
**Spare Parts Only:** No
**Approved:** 04-Dec-2009
**Renewed:** 04-Dec-2015
**Bypass:**
**Shutoffs:** fffff

---

**Type:** DC
**Manufacturer:** Watts
**Model:** 757NQT
**Size:** 4
**Orientation:** VUVD
**Meters:**
**Manual:** 9
**0.25% Pb:** Yes
**Spare Parts Only:** No
**Approved:** 04-Dec-2009
**Renewed:** 04-Dec-2015
**Bypass:**
**Shutoffs:** fffff

---

**Type:** DC
**Manufacturer:** Watts
**Model:** 757QT
**Size:** 2 1/2
**Orientation:** H
**Meters:**
**Manual:** 9
**0.25% Pb:** Yes
**Spare Parts Only:** No
**Approved:** 04-Dec-2009
**Renewed:** 04-Dec-2015
**Bypass:**
**Shutoffs:** fffff

---

**Type:** DC
**Manufacturer:** Watts
**Model:** 757QT
**Size:** 2 1/2
**Orientation:** VU
**Meters:**
**Manual:** 9
**0.25% Pb:** Yes
**Spare Parts Only:** No
**Approved:** 04-Dec-2009
**Renewed:** 04-Dec-2015
**Bypass:**
**Shutoffs:** fffff

**Type:** DC
**Manufacturer:** Watts
**Model:** 757QT
**Size:** 3
**Orientation:** H
**Meters:**
**Manual:** 9
**0.25% Pb:** Yes
**Spare Parts Only:** No
**Approved:** 04-Dec-2009
**Renewed:** 04-Dec-2015
**Bypass:**
**Shutoffs:** fffff

---

**Type:** DC
**Manufacturer:** Watts
**Model:** 757QT
**Size:** 3
**Orientation:** VU
**Meters:**
**Manual:** 9
**0.25% Pb:** Yes
**Spare Parts Only:** No
**Approved:** 04-Dec-2009
**Renewed:** 04-Dec-2015
**Bypass:**
**Shutoffs:** fffff

---

**Type:** DC
**Manufacturer:** Watts
**Model:** 757QT
**Size:** 4
**Orientation:** H
**Meters:**
**Manual:** 9
**0.25% Pb:** Yes
**Spare Parts Only:** No
**Approved:** 04-Dec-2009
**Renewed:** 04-Dec-2015
**Bypass:**
**Shutoffs:** fffff

---

**Type:** DC
**Manufacturer:** Watts
**Model:** 757QT
**Size:** 4
**Orientation:** VU
**Meters:**
**Manual:** 9
**0.25% Pb:** Yes
**Spare Parts Only:** No
**Approved:** 04-Dec-2009
**Renewed:** 04-Dec-2015
**Bypass:**
**Shutoffs:** fffff

---

**Type:** DC
**Manufacturer:** Watts
**Model:** 767
**Size:** 2 1/2
**Orientation:** H
**Meters:**
**Manual:** 9
**0.25% Pb:** No
**Spare Parts Only:** No
**Approved:** 29-Sep-2004
**Renewed:** 29-Sep-2016
**Bypass:**
**Shutoffs:** (ppp),qqq,yyy,zzz,aaaa,bbbb,dddd,eeee,gggg,kkkk,llll,mmmm,nnnn,nnnnn

---

**Type:** DC
**Manufacturer:** Watts
**Model:** 767
**Size:** 2 1/2
**Orientation:** VU
**Meters:**
**Manual:** 9
**0.25% Pb:** No
**Spare Parts Only:** No
**Approved:** 29-Sep-2004
**Renewed:** 29-Sep-2016
**Bypass:**
**Shutoffs:** (ppp),qqq,yyy,zzz,aaaa,bbbb,dddd,eeee,gggg,kkkk,llll,mmmm,nnnn,nnnnn

---

**Type:** DC
**Manufacturer:** Watts
**Model:** 767
**Size:** 3
**Orientation:** H
**Meters:**
**Manual:** 9
**0.25% Pb:** No
**Spare Parts Only:** No
**Approved:** 29-Sep-2004
**Renewed:** 29-Sep-2016
**Bypass:**
**Shutoffs:** (ppp),qqq,yyy,zzz,aaaa,bbbb,dddd,eeee,gggg,kkkk,llll,mmmm,nnnn,nnnnn


2018 © University of Southern California

**Type:** DC **Manufacturer:** Watts **Model:** 767
**Size:** 3 **Orientation:** VU **Meters:**
**Manual:** 9 **0.25% Pb:** No **Spare Parts Only:** No
**Approved:** 29-Sep-2004 **Renewed:** 29-Sep-2016 **Bypass:**
**Shutoffs:** (ppp),qqq,yyy,zzz,aaaa,bbbb,dddd,eeee,gggg,kkkk,llll,mmmm,nnnn,nnnnn

---

**Type:** DC **Manufacturer:** Watts **Model:** 767
**Size:** 4 **Orientation:** H **Meters:**
**Manual:** 9 **0.25% Pb:** No **Spare Parts Only:** No
**Approved:** 21-Apr-2006 **Renewed:** 21-Apr-2018 **Bypass:**
**Shutoffs:** (ppp),qqq,yyy,zzz,aaaa,bbbb,dddd,eeee,gggg,kkkk,llll,mmmm,nnnn,nnnnn

---

**Type:** DC **Manufacturer:** Watts **Model:** 767
**Size:** 4 **Orientation:** VU **Meters:**
**Manual:** 9 **0.25% Pb:** No **Spare Parts Only:** No
**Approved:** 21-Apr-2006 **Renewed:** 21-Apr-2018 **Bypass:**
**Shutoffs:** (ppp),qqq,yyy,zzz,aaaa,bbbb,dddd,eeee,gggg,kkkk,llll,mmmm,nnnn,nnnnn

---

**Type:** DC **Manufacturer:** Watts **Model:** 767
**Size:** 6 **Orientation:** H **Meters:**
**Manual:** 9 **0.25% Pb:** No **Spare Parts Only:** No
**Approved:** 16-Sep-2004 **Renewed:** 16-Sep-2016 **Bypass:**
**Shutoffs:** (yyy),ppp,qqq,zzz,aaaa,bbbb,dddd,eeee,gggg,kkkk,llll,mmmm,nnnn,nnnnn

---

**Type:** DC **Manufacturer:** Watts **Model:** 767
**Size:** 6 **Orientation:** VU **Meters:**
**Manual:** 9 **0.25% Pb:** No **Spare Parts Only:** No
**Approved:** 10-Feb-2006 **Renewed:** 10-Feb-2018 **Bypass:**
**Shutoffs:** (yyy),ppp,qqq,zzz,aaaa,bbbb,dddd,eeee,gggg,kkkk,llll,mmmm,nnnn,nnnnn

---

**Type:** DC **Manufacturer:** Watts **Model:** 767
**Size:** 8 **Orientation:** H **Meters:**
**Manual:** 9 **0.25% Pb:** No **Spare Parts Only:** No
**Approved:** 02-May-2008 **Renewed:** 02-May-2017 **Bypass:**
**Shutoffs:** (yyy), ppp, qqq,zzz, aaaa, bbbb, dddd, eeee, ffff, gggg,nnnnn

---

**Type:** DC **Manufacturer:** Watts **Model:** 767
**Size:** 8 **Orientation:** VU **Meters:**
**Manual:** 9 **0.25% Pb:** No **Spare Parts Only:** No
**Approved:** 02-May-2008 **Renewed:** 02-May-2017 **Bypass:**
**Shutoffs:** (yyy), ppp, qqq,zzz, aaaa, bbbb, dddd, eeee, ffff, gggg,nnnnn

**Type:** DC **Manufacturer:** Watts **Model:** 767
**Size:** 10 **Orientation:** H **Meters:**
**Manual:** 9 **0.25% Pb:** No **Spare Parts Only:** No
**Approved:** 20-Oct-2008 **Renewed:** 20-Oct-2017 **Bypass:**
**Shutoffs:** (ppp),qqq,yyy,zzz,aaaa,bbbb,dddd,eeee,gggg

---

**Type:** DC **Manufacturer:** Watts **Model:** 767
**Size:** 10 **Orientation:** VU **Meters:**
**Manual:** 9 **0.25% Pb:** No **Spare Parts Only:** No
**Approved:** 20-Oct-2008 **Renewed:** 20-Oct-2017 **Bypass:**
**Shutoffs:** (ppp),qqq,yyy,zzz,aaaa,bbbb,dddd,eeee,gggg

---

**Type:** DC **Manufacturer:** Watts **Model:** 767a
**Size:** 2 1/2 **Orientation:** H **Meters:**
**Manual:** 9 **0.25% Pb:** No **Spare Parts Only:** No
**Approved:** 07-Oct-2002 **Renewed:** 07-Oct-2017 **Bypass:**
**Shutoffs:** (ppp),qqq,yyy,zzz,aaaa,bbbb,dddd,eeee,gggg,kkkk,llll,mmmm,nnnn,nnnnn

---

**Type:** DC **Manufacturer:** Watts **Model:** 767a
**Size:** 2 1/2 **Orientation:** VU **Meters:**
**Manual:** 9 **0.25% Pb:** No **Spare Parts Only:** No
**Approved:** 07-Oct-2002 **Renewed:** 07-Oct-2017 **Bypass:**
**Shutoffs:** (ppp),qqq,yyy,zzz,aaaa,bbbb,dddd,eeee,gggg,kkkk,llll,mmmm,nnnn,nnnnn

---

**Type:** DC **Manufacturer:** Watts **Model:** 767a
**Size:** 3 **Orientation:** H **Meters:**
**Manual:** 9 **0.25% Pb:** No **Spare Parts Only:** No
**Approved:** 07-Oct-2002 **Renewed:** 07-Oct-2017 **Bypass:**
**Shutoffs:** (ppp),qqq,yyy,zzz,aaaa,bbbb,dddd,eeee,gggg,kkkk,llll,mmmm,nnnn,nnnnn

---

**Type:** DC **Manufacturer:** Watts **Model:** 767a
**Size:** 3 **Orientation:** VU **Meters:**
**Manual:** 9 **0.25% Pb:** No **Spare Parts Only:** No
**Approved:** 07-Oct-2002 **Renewed:** 07-Oct-2017 **Bypass:**
**Shutoffs:** (ppp),qqq,yyy,zzz,aaaa,bbbb,dddd,eeee,gggg,kkkk,llll,mmmm,nnnn,nnnnn

---

**Type:** DC **Manufacturer:** Watts **Model:** 767a
**Size:** 4 **Orientation:** H **Meters:**
**Manual:** 9 **0.25% Pb:** No **Spare Parts Only:** No
**Approved:** 03-Jul-2003 **Renewed:** 03-Jul-2018 **Bypass:**
**Shutoffs:** (ppp),qqq,yyy,zzz,aaaa,bbbb,dddd,eeee,gggg,kkkk,llll,mmmm,nnnn,nnnnn


2018 © University of Southern California

**Type:** DC **Manufacturer:** Watts **Model:** 767a
**Size:** 4 **Orientation:** VU **Meters:**
**Manual:** 9 **0.25% Pb:** No **Spare Parts Only:** No
**Approved:** 03-Jul-2003 **Renewed:** 03-Jul-2018 **Bypass:**
**Shutoffs:** (ppp),qqq,yyy,zzz,aaaa,bbbb,dddd,eeee,gggg,kkkk,llll,mmmm,nnnn,nnnnn

---

**Type:** DC **Manufacturer:** Watts **Model:** 767N
**Size:** 2 1/2 **Orientation:** VUVD **Meters:**
**Manual:** 9 **0.25% Pb:** No **Spare Parts Only:** No
**Approved:** 07-Apr-2009 **Renewed:** 07-Apr-2018 **Bypass:**
**Shutoffs:** (ppp),qqq,yyy,zzz,dddd,eeee,dddd,gggg,kkkk,llll,mmmm,nnnn,nnnnn

---

**Type:** DC **Manufacturer:** Watts **Model:** 767N
**Size:** 3 **Orientation:** VUVD **Meters:**
**Manual:** 9 **0.25% Pb:** No **Spare Parts Only:** No
**Approved:** 07-Apr-2009 **Renewed:** 07-Apr-2018 **Bypass:**
**Shutoffs:** (ppp),qqq,yyy,zzz,dddd,eeee,dddd,gggg,kkkk,llll,mmmm,nnnn,nnnnn

---

**Type:** DC **Manufacturer:** Watts **Model:** 767N
**Size:** 4 **Orientation:** VUVD **Meters:**
**Manual:** 9 **0.25% Pb:** No **Spare Parts Only:** No
**Approved:** 07-Apr-2009 **Renewed:** 07-Apr-2018 **Bypass:**
**Shutoffs:** (ppp),qqq,yyy,zzz,dddd,eeee,dddd,gggg,kkkk,llll,mmmm,nnnn,nnnnn

---

**Type:** DC **Manufacturer:** Watts **Model:** 767N
**Size:** 6 **Orientation:** VUVD **Meters:**
**Manual:** 9 **0.25% Pb:** No **Spare Parts Only:** No
**Approved:** 03-Jan-2013 **Renewed:** 03-Jan-2016 **Bypass:**
**Shutoffs:** ppp,qqq,aaaa,bbbb

---

**Type:** DC **Manufacturer:** Watts **Model:** 767N
**Size:** 6 **Orientation:** VUVD **Meters:**
**Manual:** 9 **0.25% Pb:** Yes **Spare Parts Only:** No
**Approved:** 03-Jan-2013 **Renewed:** 03-Jan-2016 **Bypass:**
**Shutoffs:** yyy,zzz,dddd,eeee,gggg,kkkk,llll,mmmm,nnnn

---

**Type:** DC **Manufacturer:** Watts **Model:** 767N
**Size:** 8 **Orientation:** VUVD **Meters:**
**Manual:** 9 **0.25% Pb:** No **Spare Parts Only:** No
**Approved:** 01-Sep-2009 **Renewed:** 01-Sep-2018 **Bypass:**
**Shutoffs:** (ppp),qqq,yyy,zzz,dddd,eeee,dddd,gggg,kkkk,llll,mmmm,nnnn,nnnnn

**Type:** DC **Manufacturer:** Watts **Model:** 767Na
**Size:** 2 1/2 **Orientation:** VUVD **Meters:**
**Manual:** 9 **0.25% Pb:** No **Spare Parts Only:** No
**Approved:** 20-Mar-2003 **Renewed:** 20-Mar-2018 **Bypass:**
**Shutoffs:** (ppp),qqq,yyy,zzz,aaaa,bbbb,dddd,eeee,gggg,kkkk,llll,mmmm,nnnn,nnnnn

---

**Type:** DC **Manufacturer:** Watts **Model:** 767Na
**Size:** 3 **Orientation:** VUVD **Meters:**
**Manual:** 9 **0.25% Pb:** No **Spare Parts Only:** No
**Approved:** 20-Mar-2003 **Renewed:** 20-Mar-2018 **Bypass:**
**Shutoffs:** (ppp),qqq,yyy,zzz,aaaa,bbbb,dddd,eeee,gggg,kkkk,llll,mmmm,nnnn,nnnnn

---

**Type:** DC **Manufacturer:** Watts **Model:** 767Na
**Size:** 4 **Orientation:** VUVD **Meters:**
**Manual:** 9 **0.25% Pb:** No **Spare Parts Only:** No
**Approved:** 03-Jul-2003 **Renewed:** 03-Jul-2018 **Bypass:**
**Shutoffs:** (ppp),qqq,yyy,zzz,aaaa,bbbb,dddd,eeee,gggg,kkkk,llll,mmmm,nnnn,nnnnn

---

**Type:** DC **Manufacturer:** Watts **Model:** 770
**Size:** 4 **Orientation:** H **Meters:**
**Manual:** 8 **0.25% Pb:** No **Spare Parts Only:** Yes
**Approved:** 20-May-1992 **Renewed:** 20-May-2016 **Bypass:**
**Shutoffs:** oo,gg,hh,ll,mm,pp,tt,uu,yy

---

**Type:** DC **Manufacturer:** Watts **Model:** 770
**Size:** 8 **Orientation:** H **Meters:**
**Manual:** 8 **0.25% Pb:** No **Spare Parts Only:** Yes
**Approved:** 13-Jan-1993 **Renewed:** 13-Jan-2017 **Bypass:**
**Shutoffs:** oo,gg,hh,ll,mm,pp,tt,uu,yy

---

**Type:** DC **Manufacturer:** Watts **Model:** 770QTFDA
**Size:** 4 **Orientation:** H **Meters:**
**Manual:** 8 **0.25% Pb:** No **Spare Parts Only:** Yes
**Approved:** 12-Jan-1993 **Renewed:** 13-Jan-2017 **Bypass:**
**Shutoffs:** ww

---

**Type:** DC **Manufacturer:** Watts **Model:** 770QTFDA
**Size:** 8 **Orientation:** H **Meters:**
**Manual:** 8 **0.25% Pb:** No **Spare Parts Only:** Yes
**Approved:** 12-Jan-1993 **Renewed:** 13-Jan-2017 **Bypass:**
**Shutoffs:** ww


2018 © University of Southern California

**Type:** DC
**Size:** 4
**Manual:** 8
**Approved:** 01-Jul-1992
**Shutoffs:** oo,yy
**Manufacturer:** Watts
**Orientation:** H
**0.25% Pb:** No
**Renewed:** 01-Jul-2016
**Model:** 772
**Meters:**
**Spare Parts Only:** Yes
**Bypass:**

---

**Type:** DC
**Size:** 10
**Manual:** 8
**Approved:** 13-Jan-1993
**Shutoffs:** oo,yy
**Manufacturer:** Watts
**Orientation:** H
**0.25% Pb:** No
**Renewed:** 13-Jan-2017
**Model:** 772
**Meters:**
**Spare Parts Only:** Yes
**Bypass:**

---

**Type:** DC
**Size:** 2 1/2
**Manual:** 8
**Approved:** 11-Jul-1991
**Shutoffs:** (tt),ee,ff,gg,hh,pp,uu,ccc,ddd
**Manufacturer:** Watts
**Orientation:** H
**0.25% Pb:** No
**Renewed:** 11-Jul-2018
**Model:** 774
**Meters:**
**Spare Parts Only:** No
**Bypass:**

---

**Type:** DC
**Size:** 2 1/2
**Manual:** 8
**Approved:** 11-Jul-1991
**Shutoffs:** ll,mm,oo,ffff,gggg
**Manufacturer:** Watts
**Orientation:** H
**0.25% Pb:** Yes
**Renewed:** 11-Jul-2018
**Model:** 774
**Meters:**
**Spare Parts Only:** No
**Bypass:**

---

**Type:** DC
**Size:** 3
**Manual:** 8
**Approved:** 11-Jul-1991
**Shutoffs:** (tt),ee,ff,gg,hh,pp,uu,ccc,ddd
**Manufacturer:** Watts
**Orientation:** H
**0.25% Pb:** No
**Renewed:** 11-Jul-2018
**Model:** 774
**Meters:**
**Spare Parts Only:** No
**Bypass:**

---

**Type:** DC
**Size:** 3
**Manual:** 8
**Approved:** 11-Jul-1991
**Shutoffs:** ll,mm,oo,ffff,gggg
**Manufacturer:** Watts
**Orientation:** H
**0.25% Pb:** Yes
**Renewed:** 11-Jul-2018
**Model:** 774
**Meters:**
**Spare Parts Only:** No
**Bypass:**

---

**Type:** DC
**Size:** 4
**Manual:** 8
**Approved:** 11-Jul-1991
**Shutoffs:** (tt),ee,ff,gg,hh,pp,uu,ccc,ddd
**Manufacturer:** Watts
**Orientation:** H
**0.25% Pb:** No
**Renewed:** 11-Jul-2018
**Model:** 774
**Meters:**
**Spare Parts Only:** No
**Bypass:**

**Type:** DC
**Manufacturer:** Watts
**Model:** 774
**Size:** 4
**Orientation:** H
**Meters:**
**Manual:** 8
**0.25% Pb:** Yes
**Spare Parts Only:** No
**Approved:** 11-Jul-1991
**Renewed:** 11-Jul-2018
**Bypass:**
**Shutoffs:** ll,mm,oo,ffff,gggg

---

**Type:** DC
**Manufacturer:** Watts
**Model:** 774
**Size:** 6
**Orientation:** H
**Meters:**
**Manual:** 8
**0.25% Pb:** No
**Spare Parts Only:** No
**Approved:** 09-Sep-1992
**Renewed:** 09-Sep-2016
**Bypass:**
**Shutoffs:** (tt),ee,ff,gg,hh,pp,uu,ccc,ddd

---

**Type:** DC
**Manufacturer:** Watts
**Model:** 774
**Size:** 6
**Orientation:** H
**Meters:**
**Manual:** 8
**0.25% Pb:** Yes
**Spare Parts Only:** No
**Approved:** 09-Sep-1992
**Renewed:** 09-Sep-2016
**Bypass:**
**Shutoffs:** ll,mm,oo,ffff,gggg

---

**Type:** DC
**Manufacturer:** Watts
**Model:** 774
**Size:** 8
**Orientation:** H
**Meters:**
**Manual:** 8
**0.25% Pb:** No
**Spare Parts Only:** No
**Approved:** 16-Sep-1996
**Renewed:** 16-Sep-2017
**Bypass:**
**Shutoffs:** (tt),ee,ff,gg,hh,pp,uu,ccc,ddd

---

**Type:** DC
**Manufacturer:** Watts
**Model:** 774
**Size:** 8
**Orientation:** H
**Meters:**
**Manual:** 8
**0.25% Pb:** Yes
**Spare Parts Only:** No
**Approved:** 16-Sep-1996
**Renewed:** 16-Sep-2017
**Bypass:**
**Shutoffs:** ll,mm,oo,ffff,gggg

---

**Type:** DC
**Manufacturer:** Watts
**Model:** 774
**Size:** 10
**Orientation:** H
**Meters:**
**Manual:** 8
**0.25% Pb:** Yes
**Spare Parts Only:** No
**Approved:** 16-Feb-2001
**Renewed:** 16-Feb-2016
**Bypass:**
**Shutoffs:** (ll),mm,ffff,gggg

---

**Type:** DC
**Manufacturer:** Watts
**Model:** 774
**Size:** 12
**Orientation:** H
**Meters:**
**Manual:** 9
**0.25% Pb:** No
**Spare Parts Only:** No
**Approved:** 12-Jan-2010
**Renewed:** 12-Jan-2016
**Bypass:**
**Shutoffs:** hh,gg


2018 © University of Southern California

**Type:** DC
**Manufacturer:** Watts
**Model:** 774
**Size:** 12
**Orientation:** H
**Meters:**
**Manual:** 9
**0.25% Pb:** No
**Spare Parts Only:** No
**Approved:** 12-Jan-2010
**Renewed:** 12-Jan-2016
**Bypass:**
**Shutoffs:** (ll),mm

---

**Type:** DC
**Manufacturer:** Watts
**Model:** 774
**Size:** 12
**Orientation:** VU
**Meters:**
**Manual:** 9
**0.25% Pb:** No
**Spare Parts Only:** No
**Approved:** 21-Mar-2011
**Renewed:** 21-Mar-2017
**Bypass:**
**Shutoffs:** pp,

---

**Type:** DC
**Manufacturer:** Watts
**Model:** 774
**Size:** 12
**Orientation:** VU
**Meters:**
**Manual:** 9
**0.25% Pb:** Yes
**Spare Parts Only:** No
**Approved:** 21-Mar-2011
**Renewed:** 21-Mar-2017
**Bypass:**
**Shutoffs:** (ll),mm,oo

---

**Type:** DC
**Manufacturer:** Watts
**Model:** 774X
**Size:** 2 1/2
**Orientation:** H
**Meters:**
**Manual:** 8
**0.25% Pb:** No
**Spare Parts Only:** Yes
**Approved:** 10-Sep-1996
**Renewed:** 10-Sep-2017
**Bypass:**
**Shutoffs:** (mm),ee,ff,gg,hh,ll,oo,pp,tt,uu,ccc,ddd,ffff,gggg

---

**Type:** DC
**Manufacturer:** Watts
**Model:** 774X
**Size:** 6
**Orientation:** H
**Meters:**
**Manual:** 8
**0.25% Pb:** No
**Spare Parts Only:** Yes
**Approved:** 22-Nov-1993
**Renewed:** 22-Nov-2017
**Bypass:**
**Shutoffs:** tt,ee,ff,gg,hh,ll,mm,oo,pp,uu,ccc,ddd,ffff,gggg

---

**Type:** DC
**Manufacturer:** Watts
**Model:** 774X
**Size:** 8
**Orientation:** H
**Meters:**
**Manual:** 8
**0.25% Pb:** No
**Spare Parts Only:** Yes
**Approved:** 09-Sep-1992
**Renewed:** 09-Sep-2016
**Bypass:**
**Shutoffs:** tt,ee,ff,gg,hh,ll,mm,oo,pp,uu,ccc,ddd,ffff,gggg

---

**Type:** DC
**Manufacturer:** Watts
**Model:** 775QT
**Size:** 1/2
**Orientation:** H
**Meters:**
**Manual:** 9
**0.25% Pb:** No
**Spare Parts Only:** Yes
**Approved:** 01-Feb-2000
**Renewed:** 01-Feb-2018
**Bypass:**
**Shutoffs:** int

**Type:** DC
**Size:** 1/2
**Manual:** 9
**Approved:** 01-Feb-2000
**Shutoffs:** int
**Manufacturer:** Watts
**Orientation:** VU
**0.25% Pb:** No
**Renewed:** 01-Feb-2018
**Model:** 775QT
**Meters:**
**Spare Parts Only:** Yes
**Bypass:**

---

**Type:** DC
**Size:** 3/4
**Manual:** 9
**Approved:** 01-Feb-2000
**Shutoffs:** int
**Manufacturer:** Watts
**Orientation:** H
**0.25% Pb:** No
**Renewed:** 01-Feb-2018
**Model:** 775QT
**Meters:**
**Spare Parts Only:** Yes
**Bypass:**

---

**Type:** DC
**Size:** 3/4
**Manual:** 9
**Approved:** 01-Feb-2000
**Shutoffs:** int
**Manufacturer:** Watts
**Orientation:** VU
**0.25% Pb:** No
**Renewed:** 01-Feb-2018
**Model:** 775QT
**Meters:**
**Spare Parts Only:** Yes
**Bypass:**

---

**Type:** DC
**Size:** 1
**Manual:** 9
**Approved:** 12-Aug-1999
**Shutoffs:** int
**Manufacturer:** Watts
**Orientation:** H
**0.25% Pb:** No
**Renewed:** 12-Aug-2017
**Model:** 775QT
**Meters:**
**Spare Parts Only:** Yes
**Bypass:**

---

**Type:** DC
**Size:** 1
**Manual:** 9
**Approved:** 12-Aug-1999
**Shutoffs:** int
**Manufacturer:** Watts
**Orientation:** VU
**0.25% Pb:** No
**Renewed:** 12-Aug-2017
**Model:** 775QT
**Meters:**
**Spare Parts Only:** Yes
**Bypass:**

---

**Type:** DC
**Size:** 1 1/4
**Manual:** 9
**Approved:** 07-Sep-2000
**Shutoffs:** int
**Manufacturer:** Watts
**Orientation:** H
**0.25% Pb:** No
**Renewed:** 07-Sep-2018
**Model:** 775QT
**Meters:**
**Spare Parts Only:** Yes
**Bypass:**

---

**Type:** DC
**Size:** 1 1/4
**Manual:** 9
**Approved:** 07-Sep-2000
**Shutoffs:** int
**Manufacturer:** Watts
**Orientation:** VU
**0.25% Pb:** No
**Renewed:** 07-Sep-2018
**Model:** 775QT
**Meters:**
**Spare Parts Only:** Yes
**Bypass:**


2018 © University of Southern California

**Type:** DC
**Size:** 1 1/2
**Manual:** 9
**Approved:** 07-Sep-2000
**Shutoffs:** int
**Manufacturer:** Watts
**Orientation:** H
**0.25% Pb:** No
**Renewed:** 07-Sep-2018
**Model:** 775QT
**Meters:**
**Spare Parts Only:** Yes
**Bypass:**

---

**Type:** DC
**Size:** 1 1/2
**Manual:** 9
**Approved:** 07-Sep-2000
**Shutoffs:** int
**Manufacturer:** Watts
**Orientation:** VU
**0.25% Pb:** No
**Renewed:** 07-Sep-2018
**Model:** 775QT
**Meters:**
**Spare Parts Only:** Yes
**Bypass:**

---

**Type:** DC
**Size:** 2
**Manual:** 9
**Approved:** 28-Mar-2002
**Shutoffs:** int
**Manufacturer:** Watts
**Orientation:** H
**0.25% Pb:** No
**Renewed:** 28-Mar-2017
**Model:** 775QT
**Meters:**
**Spare Parts Only:** Yes
**Bypass:**

---

**Type:** DC
**Size:** 2
**Manual:** 9
**Approved:** 28-Mar-2002
**Shutoffs:** int
**Manufacturer:** Watts
**Orientation:** VU
**0.25% Pb:** No
**Renewed:** 28-Mar-2017
**Model:** 775QT
**Meters:**
**Spare Parts Only:** Yes
**Bypass:**

---

**Type:** DC
**Size:** 2 1/2
**Manual:** 9
**Approved:** 12-Jan-2010
**Shutoffs:** (oo)
**Manufacturer:** Watts
**Orientation:** H
**0.25% Pb:** Yes
**Renewed:** 12-Jan-2016
**Model:** LF007
**Meters:**
**Spare Parts Only:** No
**Bypass:**

---

**Type:** DC
**Size:** 3
**Manual:** 9
**Approved:** 12-Jan-2010
**Shutoffs:** (oo)
**Manufacturer:** Watts
**Orientation:** H
**0.25% Pb:** Yes
**Renewed:** 12-Jan-2016
**Model:** LF007
**Meters:**
**Spare Parts Only:** No
**Bypass:**

---

**Type:** DC
**Size:** 1
**Manual:** 9
**Approved:** 13-Mar-2015
**Shutoffs:** (hhhh),rrrrr
**Manufacturer:** Watts
**Orientation:** H
**0.25% Pb:** Yes
**Renewed:** 13-Mar-2018
**Model:** LF007M1PCQT
**Meters:**
**Spare Parts Only:** No
**Bypass:**

**Type:** DC
**Size:** 1
**Manual:** 9
**Approved:** 13-Mar-2015
**Shutoffs:** (hhhh),rrrrr
**Manufacturer:** Watts
**Orientation:** VU
**0.25% Pb:** Yes
**Renewed:** 13-Mar-2018
**Model:** LF007M1PCQT
**Meters:**
**Spare Parts Only:** No
**Bypass:**

---

**Type:** DC
**Size:** 2
**Manual:** 9
**Approved:** 13-Mar-2015
**Shutoffs:** (hhhh),rrrrr
**Manufacturer:** Watts
**Orientation:** H
**0.25% Pb:** Yes
**Renewed:** 13-Mar-2018
**Model:** LF007M1PCQT
**Meters:**
**Spare Parts Only:** No
**Bypass:**

---

**Type:** DC
**Size:** 2
**Manual:** 9
**Approved:** 13-Mar-2015
**Shutoffs:** (hhhh),rrrrr
**Manufacturer:** Watts
**Orientation:** VU
**0.25% Pb:** Yes
**Renewed:** 13-Mar-2018
**Model:** LF007M1PCQT
**Meters:**
**Spare Parts Only:** No
**Bypass:**

---

**Type:** DC
**Size:** 1
**Manual:** 9
**Approved:** 11-Jan-2008
**Shutoffs:** (hhhh),rrrrr
**Manufacturer:** Watts
**Orientation:** H
**0.25% Pb:** Yes
**Renewed:** 11-Jan-2017
**Model:** LF007M1QT
**Meters:**
**Spare Parts Only:** No
**Bypass:**

---

**Type:** DC
**Size:** 1
**Manual:** 9
**Approved:** 11-Jan-2008
**Shutoffs:** (hhhh),rrrrr
**Manufacturer:** Watts
**Orientation:** VU
**0.25% Pb:** Yes
**Renewed:** 11-Jan-2017
**Model:** LF007M1QT
**Meters:**
**Spare Parts Only:** No
**Bypass:**

---

**Type:** DC
**Size:** 2
**Manual:** 9
**Approved:** 11-Jan-2008
**Shutoffs:** (hhhh),rrrrr
**Manufacturer:** Watts
**Orientation:** H
**0.25% Pb:** Yes
**Renewed:** 11-Jan-2017
**Model:** LF007M1QT
**Meters:**
**Spare Parts Only:** No
**Bypass:**

---

**Type:** DC
**Size:** 2
**Manual:** 9
**Approved:** 11-Jan-2008
**Shutoffs:** (hhhh),rrrrr
**Manufacturer:** Watts
**Orientation:** VU
**0.25% Pb:** Yes
**Renewed:** 11-Jan-2017
**Model:** LF007M1QT
**Meters:**
**Spare Parts Only:** No
**Bypass:**


2018 © University of Southern California

**Type:** DC
**Size:** 1 1/4
**Manual:** 8
**Approved:** 11-Jan-2008
**Shutoffs:** (hhhh),rrrrr
**Manufacturer:** Watts
**Orientation:** H
**0.25% Pb:** Yes
**Renewed:** 11-Jan-2017
**Model:** LF007M2QT
**Meters:**
**Spare Parts Only:** No
**Bypass:**

---

**Type:** DC
**Size:** 1 1/4
**Manual:** 8
**Approved:** 11-Jan-2008
**Shutoffs:** (hhhh),rrrrr
**Manufacturer:** Watts
**Orientation:** VU
**0.25% Pb:** Yes
**Renewed:** 11-Jan-2017
**Model:** LF007M2QT
**Meters:**
**Spare Parts Only:** No
**Bypass:**

---

**Type:** DC
**Size:** 1 1/2
**Manual:** 8
**Approved:** 11-Jan-2008
**Shutoffs:** (hhhh),rrrrr
**Manufacturer:** Watts
**Orientation:** H
**0.25% Pb:** Yes
**Renewed:** 11-Jan-2017
**Model:** LF007M2QT
**Meters:**
**Spare Parts Only:** No
**Bypass:**

---

**Type:** DC
**Size:** 1 1/2
**Manual:** 8
**Approved:** 11-Jan-2008
**Shutoffs:** (hhhh),rrrrr
**Manufacturer:** Watts
**Orientation:** VU
**0.25% Pb:** Yes
**Renewed:** 11-Jan-2017
**Model:** LF007M2QT
**Meters:**
**Spare Parts Only:** No
**Bypass:**

---

**Type:** DC
**Size:** 3/4
**Manual:** 9
**Approved:** 13-Mar-2015
**Shutoffs:** (hhhh),rrrrr
**Manufacturer:** Watts
**Orientation:** H
**0.25% Pb:** Yes
**Renewed:** 13-Mar-2018
**Model:** LF007M3PCQT
**Meters:**
**Spare Parts Only:** No
**Bypass:**

---

**Type:** DC
**Size:** 3/4
**Manual:** 9
**Approved:** 13-Mar-2015
**Shutoffs:** (hhhh),rrrrr
**Manufacturer:** Watts
**Orientation:** VU
**0.25% Pb:** Yes
**Renewed:** 13-Mar-2018
**Model:** LF007M3PCQT
**Meters:**
**Spare Parts Only:** No
**Bypass:**

---

**Type:** DC
**Size:** 3/4
**Manual:** 9
**Approved:** 11-Jan-2008
**Shutoffs:** (hhhh),rrrrr
**Manufacturer:** Watts
**Orientation:** H
**0.25% Pb:** Yes
**Renewed:** 11-Jan-2017
**Model:** LF007M3QT
**Meters:**
**Spare Parts Only:** No
**Bypass:**

**Type:** DC
**Manufacturer:** Watts
**Model:** LF007M3QT
**Size:** 3/4
**Orientation:** VU
**Meters:**
**Manual:** 9
**0.25% Pb:** Yes
**Spare Parts Only:** No
**Approved:** 11-Jan-2008
**Renewed:** 11-Jan-2017
**Bypass:**
**Shutoffs:** (hhhh),rrrrr

---

**Type:** DC
**Manufacturer:** Watts
**Model:** LF007PCQT
**Size:** 1/2
**Orientation:** H
**Meters:**
**Manual:** 9
**0.25% Pb:** Yes
**Spare Parts Only:** No
**Approved:** 13-Mar-2015
**Renewed:** 13-Mar-2018
**Bypass:**
**Shutoffs:** (hhhh),rrrrr

---

**Type:** DC
**Manufacturer:** Watts
**Model:** LF007PCQT
**Size:** 1/2
**Orientation:** VU
**Meters:**
**Manual:** 9
**0.25% Pb:** Yes
**Spare Parts Only:** No
**Approved:** 13-Mar-2015
**Renewed:** 13-Mar-2018
**Bypass:**
**Shutoffs:** (hhhh),rrrrr

---

**Type:** DC
**Manufacturer:** Watts
**Model:** LF007QT
**Size:** 1/2
**Orientation:** H
**Meters:**
**Manual:** 9
**0.25% Pb:** Yes
**Spare Parts Only:** No
**Approved:** 11-Jan-2008
**Renewed:** 11-Jan-2017
**Bypass:**
**Shutoffs:** (hhhh),rrrrr

---

**Type:** DC
**Manufacturer:** Watts
**Model:** LF007QT
**Size:** 1/2
**Orientation:** VU
**Meters:**
**Manual:** 9
**0.25% Pb:** Yes
**Spare Parts Only:** No
**Approved:** 11-Jan-2008
**Renewed:** 11-Jan-2017
**Bypass:**
**Shutoffs:** (hhhh),rrrrr

---

**Type:** DC
**Manufacturer:** Watts
**Model:** LF709
**Size:** 2 1/2
**Orientation:** H
**Meters:**
**Manual:** 9
**0.25% Pb:** Yes
**Spare Parts Only:** No
**Approved:** 12-Jan-2010
**Renewed:** 12-Jan-2016
**Bypass:**
**Shutoffs:** (ll),mm,oo,pp,zzz,cccc,dddd,eeee,ffff,gggg,nnnnn

---

**Type:** DC
**Manufacturer:** Watts
**Model:** LF709
**Size:** 3
**Orientation:** H
**Meters:**
**Manual:** 9
**0.25% Pb:** Yes
**Spare Parts Only:** No
**Approved:** 12-Jan-2010
**Renewed:** 12-Jan-2016
**Bypass:**
**Shutoffs:** (ll),mm,oo,pp,zzz,cccc,dddd,eeee,ffff,gggg,nnnnn


2018 © University of Southern California

**Type:** DC **Manufacturer:** Watts **Model:** LF709
**Size:** 4 **Orientation:** H **Meters:**
**Manual:** 9 **0.25% Pb:** Yes **Spare Parts Only:** No
**Approved:** 27-Jul-2012 **Renewed:** 27-Jul-2018 **Bypass:**
**Shutoffs:** (ll),mm,oo,pp,zzz,cccc,dddd,eeee,ffff,gggg,nnnnn

---

**Type:** DC **Manufacturer:** Watts **Model:** LF709
**Size:** 4 **Orientation:** VU **Meters:**
**Manual:** 9 **0.25% Pb:** Yes **Spare Parts Only:** No
**Approved:** 27-Jul-2012 **Renewed:** 27-Jul-2018 **Bypass:**
**Shutoffs:** (ll),mm,oo,pp,zzz,cccc,dddd,eeee,ffff,gggg,nnnnn

---

**Type:** DC **Manufacturer:** Watts **Model:** LF709
**Size:** 6 **Orientation:** H **Meters:**
**Manual:** 9 **0.25% Pb:** Yes **Spare Parts Only:** No
**Approved:** 27-Jul-2012 **Renewed:** 27-Jul-2018 **Bypass:**
**Shutoffs:** (ll),mm,oo,pp,zzz,cccc,dddd,eeee,ffff,gggg,nnnnn

---

**Type:** DC **Manufacturer:** Watts **Model:** LF709
**Size:** 6 **Orientation:** VU **Meters:**
**Manual:** 9 **0.25% Pb:** Yes **Spare Parts Only:** No
**Approved:** 27-Jul-2012 **Renewed:** 27-Jul-2018 **Bypass:**
**Shutoffs:** (ll),mm,oo,pp,zzz,cccc,dddd,eeee,ffff,gggg,nnnnn

---

**Type:** DC **Manufacturer:** Watts **Model:** LF709
**Size:** 8 **Orientation:** H **Meters:**
**Manual:** 9 **0.25% Pb:** Yes **Spare Parts Only:** No
**Approved:** 01-Jul-2010 **Renewed:** 01-Jul-2016 **Bypass:**
**Shutoffs:** (ll),mm,oo,pp,zzz,cccc,dddd,eeee,ffff,gggg,nnnnn

---

**Type:** DC **Manufacturer:** Watts **Model:** LF709
**Size:** 8 **Orientation:** VU **Meters:**
**Manual:** 9 **0.25% Pb:** Yes **Spare Parts Only:** No
**Approved:** 01-Jul-2010 **Renewed:** 01-Jul-2016 **Bypass:**
**Shutoffs:** (ll),mm,oo,pp,zzz,cccc,dddd,eeee,ffff,gggg,nnnnn

---

**Type:** DC **Manufacturer:** Watts **Model:** LF709
**Size:** 10 **Orientation:** H **Meters:**
**Manual:** 9 **0.25% Pb:** Yes **Spare Parts Only:** No
**Approved:** 01-Jul-2010 **Renewed:** 01-Jul-2016 **Bypass:**
**Shutoffs:** (ll),mm,oo,pp,zzz,cccc,dddd,eeee,ffff,gggg,nnnnn

**Type:** DC
**Manufacturer:** Watts
**Model:** LF709
**Size:** 10
**Orientation:** VU
**Meters:**
**Manual:** 9
**0.25% Pb:** Yes
**Spare Parts Only:** No
**Approved:** 01-Jul-2010
**Renewed:** 01-Jul-2016
**Bypass:**
**Shutoffs:** (ll),mm,oo,pp,zzz,cccc,dddd,eeee,ffff,gggg,nnnnn

---

**Type:** DC
**Manufacturer:** Watts
**Model:** LF719AQT
**Size:** 1
**Orientation:** VUVD
**Meters:**
**Manual:** 9
**0.25% Pb:** No
**Spare Parts Only:** No
**Approved:** 22-Aug-2005
**Renewed:** 22-Aug-2017
**Bypass:**
**Shutoffs:** (vv),xx,ooo,pppp,rrrrr

---

**Type:** DC
**Manufacturer:** Watts
**Model:** LF719AQT
**Size:** 1
**Orientation:** VUVD
**Meters:**
**Manual:** 9
**0.25% Pb:** Yes
**Spare Parts Only:** No
**Approved:** 22-Aug-2005
**Renewed:** 22-Aug-2017
**Bypass:**
**Shutoffs:** hhhh,rrrrr

---

**Type:** DC
**Manufacturer:** Watts
**Model:** LF719AQT
**Size:** 1 1/4
**Orientation:** VUVD
**Meters:**
**Manual:** 9
**0.25% Pb:** No
**Spare Parts Only:** No
**Approved:** 22-Aug-2005
**Renewed:** 22-Aug-2017
**Bypass:**
**Shutoffs:** (vv),xx,ooo,pppp,rrrrr

---

**Type:** DC
**Manufacturer:** Watts
**Model:** LF719AQT
**Size:** 1 1/4
**Orientation:** VUVD
**Meters:**
**Manual:** 9
**0.25% Pb:** Yes
**Spare Parts Only:** No
**Approved:** 22-Aug-2005
**Renewed:** 22-Aug-2017
**Bypass:**
**Shutoffs:** hhhh,rrrrr

---

**Type:** DC
**Manufacturer:** Watts
**Model:** LF719AQT
**Size:** 1 1/2
**Orientation:** VUVD
**Meters:**
**Manual:** 9
**0.25% Pb:** No
**Spare Parts Only:** No
**Approved:** 22-Aug-2005
**Renewed:** 22-Aug-2017
**Bypass:**
**Shutoffs:** (vv),xx,ooo,pppp,rrrrr

---

**Type:** DC
**Manufacturer:** Watts
**Model:** LF719AQT
**Size:** 1 1/2
**Orientation:** VUVD
**Meters:**
**Manual:** 9
**0.25% Pb:** Yes
**Spare Parts Only:** No
**Approved:** 22-Aug-2005
**Renewed:** 22-Aug-2017
**Bypass:**
**Shutoffs:** hhhh,rrrrr


2018 © University of Southern California

**Type:** DC
**Size:** 2
**Manual:** 9
**Approved:** 22-Aug-2005
**Shutoffs:** (vv),xx,ooo,pppp,rrrrr

**Manufacturer:** Watts
**Orientation:** VUVD
**0.25% Pb:** No
**Renewed:** 22-Aug-2017

**Model:** LF719AQT
**Meters:**
**Spare Parts Only:** No
**Bypass:**

---

**Type:** DC
**Size:** 2
**Manual:** 9
**Approved:** 22-Aug-2005
**Shutoffs:** hhhh,rrrrr

**Manufacturer:** Watts
**Orientation:** VUVD
**0.25% Pb:** Yes
**Renewed:** 22-Aug-2017

**Model:** LF719AQT
**Meters:**
**Spare Parts Only:** No
**Bypass:**

---

**Type:** DC
**Size:** 1/2
**Manual:** 9
**Approved:** 03-Jul-2013
**Shutoffs:** (hhhh)

**Manufacturer:** Watts
**Orientation:** H
**0.25% Pb:** Yes
**Renewed:** 03-Jul-2016

**Model:** LF719QT
**Meters:**
**Spare Parts Only:** No
**Bypass:**

---

**Type:** DC
**Size:** 1/2
**Manual:** 9
**Approved:** 03-Jul-2013
**Shutoffs:** (hhhh)

**Manufacturer:** Watts
**Orientation:** VD
**0.25% Pb:** Yes
**Renewed:** 03-Jul-2016

**Model:** LF719QT
**Meters:**
**Spare Parts Only:** No
**Bypass:**

---

**Type:** DC
**Size:** 1/2
**Manual:** 9
**Approved:** 03-Jul-2013
**Shutoffs:** (hhhh)

**Manufacturer:** Watts
**Orientation:** VU
**0.25% Pb:** Yes
**Renewed:** 03-Jul-2016

**Model:** LF719QT
**Meters:**
**Spare Parts Only:** No
**Bypass:**

---

**Type:** DC
**Size:** 3/4
**Manual:** 9
**Approved:** 03-Jul-2013
**Shutoffs:** (hhhh)

**Manufacturer:** Watts
**Orientation:** H
**0.25% Pb:** Yes
**Renewed:** 03-Jul-2016

**Model:** LF719QT
**Meters:**
**Spare Parts Only:** No
**Bypass:**

---

**Type:** DC
**Size:** 3/4
**Manual:** 9
**Approved:** 03-Jul-2013
**Shutoffs:** (hhhh)

**Manufacturer:** Watts
**Orientation:** VD
**0.25% Pb:** Yes
**Renewed:** 03-Jul-2016

**Model:** LF719QT
**Meters:**
**Spare Parts Only:** No
**Bypass:**

**Type:** DC
**Size:** 3/4
**Manual:** 9
**Approved:** 03-Jul-2013
**Shutoffs:** (hhhh)
**Manufacturer:** Watts
**Orientation:** VU
**0.25% Pb:** Yes
**Renewed:** 03-Jul-2016
**Model:** LF719QT
**Meters:**
**Spare Parts Only:** No
**Bypass:**

---

**Type:** DC
**Size:** 1
**Manual:** 9
**Approved:** 22-Aug-2005
**Shutoffs:** (vv),xx,ooo,pppp,rrrrr
**Manufacturer:** Watts
**Orientation:** H
**0.25% Pb:** No
**Renewed:** 22-Aug-2017
**Model:** LF719QT
**Meters:**
**Spare Parts Only:** No
**Bypass:**

---

**Type:** DC
**Size:** 1
**Manual:** 9
**Approved:** 22-Aug-2005
**Shutoffs:** hhhh,rrrrr
**Manufacturer:** Watts
**Orientation:** H
**0.25% Pb:** Yes
**Renewed:** 22-Aug-2017
**Model:** LF719QT
**Meters:**
**Spare Parts Only:** No
**Bypass:**

---

**Type:** DC
**Size:** 1
**Manual:** 9
**Approved:** 22-Aug-2005
**Shutoffs:** (vv),xx,ooo,pppp,rrrrr
**Manufacturer:** Watts
**Orientation:** VD
**0.25% Pb:** No
**Renewed:** 22-Aug-2017
**Model:** LF719QT
**Meters:**
**Spare Parts Only:** No
**Bypass:**

---

**Type:** DC
**Size:** 1
**Manual:** 9
**Approved:** 22-Aug-2005
**Shutoffs:** hhhh,rrrrr
**Manufacturer:** Watts
**Orientation:** VD
**0.25% Pb:** Yes
**Renewed:** 22-Aug-2017
**Model:** LF719QT
**Meters:**
**Spare Parts Only:** No
**Bypass:**

---

**Type:** DC
**Size:** 1
**Manual:** 9
**Approved:** 22-Aug-2005
**Shutoffs:** (vv),xx,ooo,pppp,rrrrr
**Manufacturer:** Watts
**Orientation:** VU
**0.25% Pb:** No
**Renewed:** 22-Aug-2017
**Model:** LF719QT
**Meters:**
**Spare Parts Only:** No
**Bypass:**

---

**Type:** DC
**Size:** 1
**Manual:** 9
**Approved:** 22-Aug-2005
**Shutoffs:** hhhh,rrrrr
**Manufacturer:** Watts
**Orientation:** VU
**0.25% Pb:** Yes
**Renewed:** 22-Aug-2017
**Model:** LF719QT
**Meters:**
**Spare Parts Only:** No
**Bypass:**


2018 © University of Southern California

**Type:** DC
**Size:** 1 1/4
**Manual:** 9
**Approved:** 22-Aug-2005
**Shutoffs:** (vv),xx,ooo,pppp,rrrrr
**Manufacturer:** Watts
**Orientation:** H
**0.25% Pb:** No
**Renewed:** 22-Aug-2017
**Model:** LF719QT
**Meters:**
**Spare Parts Only:** No
**Bypass:**

---

**Type:** DC
**Size:** 1 1/4
**Manual:** 9
**Approved:** 22-Aug-2005
**Shutoffs:** hhhh,rrrrr
**Manufacturer:** Watts
**Orientation:** H
**0.25% Pb:** Yes
**Renewed:** 22-Aug-2017
**Model:** LF719QT
**Meters:**
**Spare Parts Only:** No
**Bypass:**

---

**Type:** DC
**Size:** 1 1/4
**Manual:** 9
**Approved:** 22-Aug-2005
**Shutoffs:** (vv),xx,ooo,pppp,rrrrr
**Manufacturer:** Watts
**Orientation:** VD
**0.25% Pb:** No
**Renewed:** 22-Aug-2017
**Model:** LF719QT
**Meters:**
**Spare Parts Only:** No
**Bypass:**

---

**Type:** DC
**Size:** 1 1/4
**Manual:** 9
**Approved:** 22-Aug-2005
**Shutoffs:** hhhh,rrrrr
**Manufacturer:** Watts
**Orientation:** VD
**0.25% Pb:** Yes
**Renewed:** 22-Aug-2017
**Model:** LF719QT
**Meters:**
**Spare Parts Only:** No
**Bypass:**

---

**Type:** DC
**Size:** 1 1/4
**Manual:** 9
**Approved:** 22-Aug-2005
**Shutoffs:** (vv),xx,ooo,pppp,rrrrr
**Manufacturer:** Watts
**Orientation:** VU
**0.25% Pb:** No
**Renewed:** 22-Aug-2017
**Model:** LF719QT
**Meters:**
**Spare Parts Only:** No
**Bypass:**

---

**Type:** DC
**Size:** 1 1/4
**Manual:** 9
**Approved:** 22-Aug-2005
**Shutoffs:** hhhh,rrrrr
**Manufacturer:** Watts
**Orientation:** VU
**0.25% Pb:** Yes
**Renewed:** 22-Aug-2017
**Model:** LF719QT
**Meters:**
**Spare Parts Only:** No
**Bypass:**

---

**Type:** DC
**Size:** 1 1/2
**Manual:** 9
**Approved:** 22-Aug-2005
**Shutoffs:** (vv),xx,ooo,pppp,rrrrr
**Manufacturer:** Watts
**Orientation:** H
**0.25% Pb:** No
**Renewed:** 22-Aug-2017
**Model:** LF719QT
**Meters:**
**Spare Parts Only:** No
**Bypass:**

**Type:** DC
**Manufacturer:** Watts
**Model:** LF719QT
**Size:** 1 1/2
**Orientation:** H
**Meters:**
**Manual:** 9
**0.25% Pb:** Yes
**Spare Parts Only:** No
**Approved:** 22-Aug-2005
**Renewed:** 22-Aug-2017
**Bypass:**
**Shutoffs:** hhhh,rrrrr

---

**Type:** DC
**Manufacturer:** Watts
**Model:** LF719QT
**Size:** 1 1/2
**Orientation:** VD
**Meters:**
**Manual:** 9
**0.25% Pb:** No
**Spare Parts Only:** No
**Approved:** 22-Aug-2005
**Renewed:** 22-Aug-2017
**Bypass:**
**Shutoffs:** (vv),xx,ooo,pppp,rrrrr

---

**Type:** DC
**Manufacturer:** Watts
**Model:** LF719QT
**Size:** 1 1/2
**Orientation:** VD
**Meters:**
**Manual:** 9
**0.25% Pb:** Yes
**Spare Parts Only:** No
**Approved:** 22-Aug-2005
**Renewed:** 22-Aug-2017
**Bypass:**
**Shutoffs:** hhhh,rrrrr

---

**Type:** DC
**Manufacturer:** Watts
**Model:** LF719QT
**Size:** 1 1/2
**Orientation:** VU
**Meters:**
**Manual:** 9
**0.25% Pb:** No
**Spare Parts Only:** No
**Approved:** 22-Aug-2005
**Renewed:** 22-Aug-2017
**Bypass:**
**Shutoffs:** (vv),xx,ooo,pppp,rrrrr

---

**Type:** DC
**Manufacturer:** Watts
**Model:** LF719QT
**Size:** 1 1/2
**Orientation:** VU
**Meters:**
**Manual:** 9
**0.25% Pb:** Yes
**Spare Parts Only:** No
**Approved:** 22-Aug-2005
**Renewed:** 22-Aug-2017
**Bypass:**
**Shutoffs:** hhhh,rrrrr

---

**Type:** DC
**Manufacturer:** Watts
**Model:** LF719QT
**Size:** 2
**Orientation:** H
**Meters:**
**Manual:** 9
**0.25% Pb:** No
**Spare Parts Only:** No
**Approved:** 22-Aug-2005
**Renewed:** 22-Aug-2017
**Bypass:**
**Shutoffs:** (vv),xx,ooo,pppp,rrrrr

---

**Type:** DC
**Manufacturer:** Watts
**Model:** LF719QT
**Size:** 2
**Orientation:** H
**Meters:**
**Manual:** 9
**0.25% Pb:** Yes
**Spare Parts Only:** No
**Approved:** 22-Aug-2005
**Renewed:** 22-Aug-2017
**Bypass:**
**Shutoffs:** hhhh,rrrrr


2018 © University of Southern California

**Type:** DC
**Size:** 2
**Manual:** 9
**Approved:** 22-Aug-2005
**Shutoffs:** (vv),xx,ooo,pppp,rrrrr
**Manufacturer:** Watts
**Orientation:** VD
**0.25% Pb:** No
**Renewed:** 22-Aug-2017
**Model:** LF719QT
**Meters:**
**Spare Parts Only:** No
**Bypass:**

---

**Type:** DC
**Size:** 2
**Manual:** 9
**Approved:** 22-Aug-2005
**Shutoffs:** hhhh,rrrrr
**Manufacturer:** Watts
**Orientation:** VD
**0.25% Pb:** Yes
**Renewed:** 22-Aug-2017
**Model:** LF719QT
**Meters:**
**Spare Parts Only:** No
**Bypass:**

---

**Type:** DC
**Size:** 2
**Manual:** 9
**Approved:** 22-Aug-2005
**Shutoffs:** (vv),xx,ooo,pppp,rrrrr
**Manufacturer:** Watts
**Orientation:** VU
**0.25% Pb:** No
**Renewed:** 22-Aug-2017
**Model:** LF719QT
**Meters:**
**Spare Parts Only:** No
**Bypass:**

---

**Type:** DC
**Size:** 2
**Manual:** 9
**Approved:** 22-Aug-2005
**Shutoffs:** hhhh,rrrrr
**Manufacturer:** Watts
**Orientation:** VU
**0.25% Pb:** Yes
**Renewed:** 22-Aug-2017
**Model:** LF719QT
**Meters:**
**Spare Parts Only:** No
**Bypass:**

---

**Type:** DC
**Size:** 1/2
**Manual:** 9
**Approved:** 22-Aug-2005
**Shutoffs:** (vv),xx,ooo,hhhh,pppp,rrrrr
**Manufacturer:** Watts
**Orientation:** H
**0.25% Pb:** No
**Renewed:** 22-Aug-2017
**Model:** LF719QTR10
**Meters:**
**Spare Parts Only:** Yes
**Bypass:**

---

**Type:** DC
**Size:** 1/2
**Manual:** 9
**Approved:** 22-Aug-2005
**Shutoffs:** (vv),xx,ooo,hhhh,pppp,rrrrr
**Manufacturer:** Watts
**Orientation:** VD
**0.25% Pb:** No
**Renewed:** 22-Aug-2017
**Model:** LF719QTR10
**Meters:**
**Spare Parts Only:** Yes
**Bypass:**

---

**Type:** DC
**Size:** 1/2
**Manual:** 9
**Approved:** 22-Aug-2005
**Shutoffs:** (vv),xx,ooo,hhhh,pppp,rrrrr
**Manufacturer:** Watts
**Orientation:** VU
**0.25% Pb:** No
**Renewed:** 22-Aug-2017
**Model:** LF719QTR10
**Meters:**
**Spare Parts Only:** Yes
**Bypass:**

**Type:** DC
**Size:** 3/4
**Manual:** 9
**Approved:** 22-Aug-2005
**Shutoffs:** (vv),xx,ooo,hhhh,pppp,rrrrr

**Manufacturer:** Watts
**Orientation:** H
**0.25% Pb:** No
**Renewed:** 22-Aug-2017

**Model:** LF719QTR10
**Meters:**
**Spare Parts Only:** Yes
**Bypass:**

---

**Type:** DC
**Size:** 3/4
**Manual:** 9
**Approved:** 22-Aug-2005
**Shutoffs:** (vv),xx,ooo,hhhh,pppp,rrrrr

**Manufacturer:** Watts
**Orientation:** VD
**0.25% Pb:** No
**Renewed:** 22-Aug-2017

**Model:** LF719QTR10
**Meters:**
**Spare Parts Only:** Yes
**Bypass:**

---

**Type:** DC
**Size:** 3/4
**Manual:** 9
**Approved:** 22-Aug-2005
**Shutoffs:** (vv),xx,ooo,hhhh,pppp,rrrrr

**Manufacturer:** Watts
**Orientation:** VU
**0.25% Pb:** No
**Renewed:** 22-Aug-2017

**Model:** LF719QTR10
**Meters:**
**Spare Parts Only:** Yes
**Bypass:**

---

**Type:** DC
**Size:** 1
**Manual:** 9
**Approved:** 22-Aug-2005
**Shutoffs:** (vv),xx,ooo,pppp

**Manufacturer:** Watts
**Orientation:** H
**0.25% Pb:** No
**Renewed:** 22-Aug-2017

**Model:** LFU719QT
**Meters:**
**Spare Parts Only:** No
**Bypass:**

---

**Type:** DC
**Size:** 1
**Manual:** 9
**Approved:** 22-Aug-2005
**Shutoffs:** hhhh

**Manufacturer:** Watts
**Orientation:** H
**0.25% Pb:** Yes
**Renewed:** 22-Aug-2017

**Model:** LFU719QT
**Meters:**
**Spare Parts Only:** No
**Bypass:**

---

**Type:** DC
**Size:** 1
**Manual:** 9
**Approved:** 22-Aug-2005
**Shutoffs:** (vv),xx,ooo,pppp

**Manufacturer:** Watts
**Orientation:** VD
**0.25% Pb:** No
**Renewed:** 22-Aug-2017

**Model:** LFU719QT
**Meters:**
**Spare Parts Only:** No
**Bypass:**

---

**Type:** DC
**Size:** 1
**Manual:** 9
**Approved:** 22-Aug-2005
**Shutoffs:** hhhh

**Manufacturer:** Watts
**Orientation:** VD
**0.25% Pb:** Yes
**Renewed:** 22-Aug-2017

**Model:** LFU719QT
**Meters:**
**Spare Parts Only:** No
**Bypass:**


2018 © University of Southern California

**Type:** DC
**Size:** 1
**Manual:** 9
**Approved:** 22-Aug-2005
**Shutoffs:** (vv),xx,ooo,pppp
**Manufacturer:** Watts
**Orientation:** VU
**0.25% Pb:** No
**Renewed:** 22-Aug-2017
**Model:** LFU719QT
**Meters:**
**Spare Parts Only:** No
**Bypass:**

---

**Type:** DC
**Size:** 1
**Manual:** 9
**Approved:** 22-Aug-2005
**Shutoffs:** hhhh
**Manufacturer:** Watts
**Orientation:** VU
**0.25% Pb:** Yes
**Renewed:** 22-Aug-2017
**Model:** LFU719QT
**Meters:**
**Spare Parts Only:** No
**Bypass:**

---

**Type:** DC
**Size:** 1 1/4
**Manual:** 9
**Approved:** 22-Aug-2005
**Shutoffs:** (vv),xx,ooo,pppp
**Manufacturer:** Watts
**Orientation:** H
**0.25% Pb:** No
**Renewed:** 22-Aug-2017
**Model:** LFU719QT
**Meters:**
**Spare Parts Only:** No
**Bypass:**

---

**Type:** DC
**Size:** 1 1/4
**Manual:** 9
**Approved:** 22-Aug-2005
**Shutoffs:** hhhh
**Manufacturer:** Watts
**Orientation:** H
**0.25% Pb:** Yes
**Renewed:** 22-Aug-2017
**Model:** LFU719QT
**Meters:**
**Spare Parts Only:** No
**Bypass:**

---

**Type:** DC
**Size:** 1 1/4
**Manual:** 9
**Approved:** 22-Aug-2005
**Shutoffs:** (vv),xx,ooo,pppp
**Manufacturer:** Watts
**Orientation:** VD
**0.25% Pb:** No
**Renewed:** 22-Aug-2017
**Model:** LFU719QT
**Meters:**
**Spare Parts Only:** No
**Bypass:**

---

**Type:** DC
**Size:** 1 1/4
**Manual:** 9
**Approved:** 22-Aug-2005
**Shutoffs:** hhhh
**Manufacturer:** Watts
**Orientation:** VD
**0.25% Pb:** Yes
**Renewed:** 22-Aug-2017
**Model:** LFU719QT
**Meters:**
**Spare Parts Only:** No
**Bypass:**

---

**Type:** DC
**Size:** 1 1/4
**Manual:** 9
**Approved:** 22-Aug-2005
**Shutoffs:** (vv),xx,ooo,pppp
**Manufacturer:** Watts
**Orientation:** VU
**0.25% Pb:** No
**Renewed:** 22-Aug-2017
**Model:** LFU719QT
**Meters:**
**Spare Parts Only:** No
**Bypass:**

**Type:** DC
**Size:** 1 1/4
**Manual:** 9
**Approved:** 22-Aug-2005
**Shutoffs:** hhhh
**Manufacturer:** Watts
**Orientation:** VU
**0.25% Pb:** Yes
**Renewed:** 22-Aug-2017
**Model:** LFU719QT
**Meters:**
**Spare Parts Only:** No
**Bypass:**

---

**Type:** DC
**Size:** 1 1/2
**Manual:** 9
**Approved:** 22-Aug-2005
**Shutoffs:** (vv),xx,ooo,pppp
**Manufacturer:** Watts
**Orientation:** H
**0.25% Pb:** No
**Renewed:** 22-Aug-2017
**Model:** LFU719QT
**Meters:**
**Spare Parts Only:** No
**Bypass:**

---

**Type:** DC
**Size:** 1 1/2
**Manual:** 9
**Approved:** 22-Aug-2005
**Shutoffs:** hhhh
**Manufacturer:** Watts
**Orientation:** H
**0.25% Pb:** Yes
**Renewed:** 22-Aug-2017
**Model:** LFU719QT
**Meters:**
**Spare Parts Only:** No
**Bypass:**

---

**Type:** DC
**Size:** 1 1/2
**Manual:** 9
**Approved:** 22-Aug-2005
**Shutoffs:** (vv),xx,ooo,pppp
**Manufacturer:** Watts
**Orientation:** VD
**0.25% Pb:** No
**Renewed:** 22-Aug-2017
**Model:** LFU719QT
**Meters:**
**Spare Parts Only:** No
**Bypass:**

---

**Type:** DC
**Size:** 1 1/2
**Manual:** 9
**Approved:** 22-Aug-2005
**Shutoffs:** hhhh
**Manufacturer:** Watts
**Orientation:** VD
**0.25% Pb:** Yes
**Renewed:** 22-Aug-2017
**Model:** LFU719QT
**Meters:**
**Spare Parts Only:** No
**Bypass:**

---

**Type:** DC
**Size:** 1 1/2
**Manual:** 9
**Approved:** 22-Aug-2005
**Shutoffs:** (vv),xx,ooo,pppp
**Manufacturer:** Watts
**Orientation:** VU
**0.25% Pb:** No
**Renewed:** 22-Aug-2017
**Model:** LFU719QT
**Meters:**
**Spare Parts Only:** No
**Bypass:**

---

**Type:** DC
**Size:** 1 1/2
**Manual:** 9
**Approved:** 22-Aug-2005
**Shutoffs:** hhhh
**Manufacturer:** Watts
**Orientation:** VU
**0.25% Pb:** Yes
**Renewed:** 22-Aug-2017
**Model:** LFU719QT
**Meters:**
**Spare Parts Only:** No
**Bypass:**


2018 © University of Southern California

**Type:** DC
**Size:** 2
**Manual:** 9
**Approved:** 22-Aug-2005
**Shutoffs:** (vv),xx,ooo,pppp

**Manufacturer:** Watts
**Orientation:** H
**0.25% Pb:** No
**Renewed:** 22-Aug-2017

**Model:** LFU719QT
**Meters:**
**Spare Parts Only:** No
**Bypass:**

---

**Type:** DC
**Size:** 2
**Manual:** 9
**Approved:** 22-Aug-2005
**Shutoffs:** hhhh

**Manufacturer:** Watts
**Orientation:** H
**0.25% Pb:** Yes
**Renewed:** 22-Aug-2017

**Model:** LFU719QT
**Meters:**
**Spare Parts Only:** No
**Bypass:**

---

**Type:** DC
**Size:** 2
**Manual:** 9
**Approved:** 22-Aug-2005
**Shutoffs:** (vv),xx,ooo,pppp

**Manufacturer:** Watts
**Orientation:** VD
**0.25% Pb:** No
**Renewed:** 22-Aug-2017

**Model:** LFU719QT
**Meters:**
**Spare Parts Only:** No
**Bypass:**

---

**Type:** DC
**Size:** 2
**Manual:** 9
**Approved:** 22-Aug-2005
**Shutoffs:** hhhh

**Manufacturer:** Watts
**Orientation:** VD
**0.25% Pb:** Yes
**Renewed:** 22-Aug-2017

**Model:** LFU719QT
**Meters:**
**Spare Parts Only:** No
**Bypass:**

---

**Type:** DC
**Size:** 2
**Manual:** 9
**Approved:** 22-Aug-2005
**Shutoffs:** (vv),xx,ooo,pppp

**Manufacturer:** Watts
**Orientation:** VU
**0.25% Pb:** No
**Renewed:** 22-Aug-2017

**Model:** LFU719QT
**Meters:**
**Spare Parts Only:** No
**Bypass:**

---

**Type:** DC
**Size:** 2
**Manual:** 9
**Approved:** 22-Aug-2005
**Shutoffs:** hhhh

**Manufacturer:** Watts
**Orientation:** VU
**0.25% Pb:** Yes
**Renewed:** 22-Aug-2017

**Model:** LFU719QT
**Meters:**
**Spare Parts Only:** No
**Bypass:**

---

**Type:** DC
**Size:** 1
**Manual:** 9
**Approved:** 18-May-1998
**Shutoffs:** (hhh)

**Manufacturer:** Watts
**Orientation:** H
**0.25% Pb:** Yes
**Renewed:** 18-May-2016

**Model:** SS007M1QT
**Meters:**
**Spare Parts Only:** No
**Bypass:**

**Type:** DC
**Size:** 1
**Manual:** 9
**Approved:** 18-May-1998
**Shutoffs:** (hhh)
**Manufacturer:** Watts
**Orientation:** VU
**0.25% Pb:** Yes
**Renewed:** 18-May-2016
**Model:** SS007M1QT
**Meters:**
**Spare Parts Only:** No
**Bypass:**

---

**Type:** DC
**Size:** 1/2
**Manual:** 9
**Approved:** 11-Sep-2000
**Shutoffs:** (hhh)
**Manufacturer:** Watts
**Orientation:** H
**0.25% Pb:** Yes
**Renewed:** 11-Sep-2018
**Model:** SS007M3QT
**Meters:**
**Spare Parts Only:** No
**Bypass:**

---

**Type:** DC
**Size:** 1/2
**Manual:** 9
**Approved:** 11-Sep-2000
**Shutoffs:** (hhh)
**Manufacturer:** Watts
**Orientation:** VU
**0.25% Pb:** Yes
**Renewed:** 11-Sep-2018
**Model:** SS007M3QT
**Meters:**
**Spare Parts Only:** No
**Bypass:**

---

**Type:** DC
**Size:** 3/4
**Manual:** 9
**Approved:** 07-Sep-2000
**Shutoffs:** (hhh)
**Manufacturer:** Watts
**Orientation:** H
**0.25% Pb:** Yes
**Renewed:** 07-Sep-2018
**Model:** SS007M3QT
**Meters:**
**Spare Parts Only:** No
**Bypass:**

---

**Type:** DC
**Size:** 3/4
**Manual:** 9
**Approved:** 07-Sep-2000
**Shutoffs:** (hhh)
**Manufacturer:** Watts
**Orientation:** VU
**0.25% Pb:** Yes
**Renewed:** 07-Sep-2018
**Model:** SS007M3QT
**Meters:**
**Spare Parts Only:** No
**Bypass:**

---

**Type:** DC
**Size:** 3/4
**Manual:** 8
**Approved:** 10-Dec-1994
**Shutoffs:** (vv),xx,ooo,hhhh,pppp
**Manufacturer:** Watts
**Orientation:** VDVD
**0.25% Pb:** No
**Renewed:** 10-Dec-2015
**Model:** U007M1APCQT
**Meters:**
**Spare Parts Only:** No
**Bypass:**

---

**Type:** DC
**Size:** 3/4
**Manual:** 8
**Approved:** 10-Dec-1994
**Shutoffs:** (vv),xx,ooo,hhhh,pppp
**Manufacturer:** Watts
**Orientation:** VDVU
**0.25% Pb:** No
**Renewed:** 10-Dec-2015
**Model:** U007M1APCQT
**Meters:**
**Spare Parts Only:** No
**Bypass:**


2018 © University of Southern California

**Type:** DC
**Size:** 3/4
**Manual:** 8
**Approved:** 10-Dec-1994
**Shutoffs:** (vv),xx,ooo,hhhh,pppp
**Manufacturer:** Watts
**Orientation:** VUVD
**0.25% Pb:** No
**Renewed:** 10-Dec-2015
**Model:** U007M1APCQT
**Meters:**
**Spare Parts Only:** No
**Bypass:**

---

**Type:** DC
**Size:** 3/4
**Manual:** 8
**Approved:** 10-Dec-1994
**Shutoffs:** (vv),xx,ooo,hhhh,pppp
**Manufacturer:** Watts
**Orientation:** VUVU
**0.25% Pb:** No
**Renewed:** 10-Dec-2015
**Model:** U007M1APCQT
**Meters:**
**Spare Parts Only:** No
**Bypass:**

---

**Type:** DC
**Size:** 2
**Manual:** 8
**Approved:** 27-Sep-1994
**Shutoffs:** (vv),xx,ooo,hhhh,pppp
**Manufacturer:** Watts
**Orientation:** VDVD
**0.25% Pb:** No
**Renewed:** 27-Sep-2018
**Model:** U007M1APCQT
**Meters:**
**Spare Parts Only:** No
**Bypass:**

---

**Type:** DC
**Size:** 2
**Manual:** 8
**Approved:** 27-Sep-1994
**Shutoffs:** (vv),xx,ooo,hhhh,pppp
**Manufacturer:** Watts
**Orientation:** VDVU
**0.25% Pb:** No
**Renewed:** 27-Sep-2018
**Model:** U007M1APCQT
**Meters:**
**Spare Parts Only:** No
**Bypass:**

---

**Type:** DC
**Size:** 2
**Manual:** 8
**Approved:** 27-Sep-1994
**Shutoffs:** (vv),xx,ooo,hhhh,pppp
**Manufacturer:** Watts
**Orientation:** VUVD
**0.25% Pb:** No
**Renewed:** 27-Sep-2018
**Model:** U007M1APCQT
**Meters:**
**Spare Parts Only:** No
**Bypass:**

---

**Type:** DC
**Size:** 2
**Manual:** 8
**Approved:** 27-Sep-1994
**Shutoffs:** (vv),xx,ooo,hhhh,pppp
**Manufacturer:** Watts
**Orientation:** VUVU
**0.25% Pb:** No
**Renewed:** 27-Sep-2018
**Model:** U007M1APCQT
**Meters:**
**Spare Parts Only:** No
**Bypass:**

---

**Type:** DC
**Size:** 3/4
**Manual:** 8
**Approved:** 24-Feb-1994
**Shutoffs:** (vv),xx,ooo,hhhh,pppp
**Manufacturer:** Watts
**Orientation:** VDVD
**0.25% Pb:** No
**Renewed:** 24-Feb-2018
**Model:** U007M1AQT
**Meters:**
**Spare Parts Only:** No
**Bypass:**

**Type:** DC
**Size:** 3/4
**Manual:** 8
**Approved:** 24-Feb-1994
**Shutoffs:** (vv),xx,ooo,hhhh,pppp
**Manufacturer:** Watts
**Orientation:** VDVU
**0.25% Pb:** No
**Renewed:** 24-Feb-2018
**Model:** U007M1AQT
**Meters:**
**Spare Parts Only:** No
**Bypass:**

---

**Type:** DC
**Size:** 3/4
**Manual:** 8
**Approved:** 24-Feb-1994
**Shutoffs:** (vv),xx,ooo,hhhh,pppp
**Manufacturer:** Watts
**Orientation:** VUVD
**0.25% Pb:** No
**Renewed:** 24-Feb-2018
**Model:** U007M1AQT
**Meters:**
**Spare Parts Only:** No
**Bypass:**

---

**Type:** DC
**Size:** 3/4
**Manual:** 8
**Approved:** 24-Feb-1994
**Shutoffs:** (vv),xx,ooo,hhhh,pppp
**Manufacturer:** Watts
**Orientation:** VUVU
**0.25% Pb:** No
**Renewed:** 24-Feb-2018
**Model:** U007M1AQT
**Meters:**
**Spare Parts Only:** No
**Bypass:**

---

**Type:** DC
**Size:** 2
**Manual:** 8
**Approved:** 24-Feb-1994
**Shutoffs:** (vv),xx,ooo,hhhh,pppp
**Manufacturer:** Watts
**Orientation:** VDVD
**0.25% Pb:** No
**Renewed:** 24-Feb-2018
**Model:** U007M1AQT
**Meters:**
**Spare Parts Only:** No
**Bypass:**

---

**Type:** DC
**Size:** 2
**Manual:** 8
**Approved:** 24-Feb-1994
**Shutoffs:** (vv),xx,ooo,hhhh,pppp
**Manufacturer:** Watts
**Orientation:** VDVU
**0.25% Pb:** No
**Renewed:** 24-Feb-2018
**Model:** U007M1AQT
**Meters:**
**Spare Parts Only:** No
**Bypass:**

---

**Type:** DC
**Size:** 2
**Manual:** 8
**Approved:** 24-Feb-1994
**Shutoffs:** (vv),xx,ooo,hhhh,pppp
**Manufacturer:** Watts
**Orientation:** VUVD
**0.25% Pb:** No
**Renewed:** 24-Feb-2018
**Model:** U007M1AQT
**Meters:**
**Spare Parts Only:** No
**Bypass:**

---

**Type:** DC
**Size:** 2
**Manual:** 8
**Approved:** 24-Feb-1994
**Shutoffs:** (vv),xx,ooo,hhhh,pppp
**Manufacturer:** Watts
**Orientation:** VUVU
**0.25% Pb:** No
**Renewed:** 24-Feb-2018
**Model:** U007M1AQT
**Meters:**
**Spare Parts Only:** No
**Bypass:**


2018 © University of Southern California

**Type:** DC
**Size:** 3/4
**Manual:** 8
**Approved:** 10-Dec-1993
**Shutoffs:** (vv),xx,ooo,hhhh,pppp
**Manufacturer:** Watts
**Orientation:** H
**0.25% Pb:** No
**Renewed:** 10-Dec-2017
**Model:** U007M1PCQT
**Meters:**
**Spare Parts Only:** No
**Bypass:**

---

**Type:** DC
**Size:** 1
**Manual:** 8
**Approved:** 10-Dec-1993
**Shutoffs:** (vv),xx,ooo,hhhh,pppp
**Manufacturer:** Watts
**Orientation:** H
**0.25% Pb:** No
**Renewed:** 10-Dec-2017
**Model:** U007M1PCQT
**Meters:**
**Spare Parts Only:** No
**Bypass:**

---

**Type:** DC
**Size:** 1 1/2
**Manual:** 8
**Approved:** 27-Sep-1994
**Shutoffs:** (vv),xx,ooo,hhhh,pppp
**Manufacturer:** Watts
**Orientation:** H
**0.25% Pb:** No
**Renewed:** 27-Sep-2018
**Model:** U007M1PCQT
**Meters:**
**Spare Parts Only:** No
**Bypass:**

---

**Type:** DC
**Size:** 2
**Manual:** 8
**Approved:** 27-Sep-1994
**Shutoffs:** (vv),xx,ooo,hhhh,pppp
**Manufacturer:** Watts
**Orientation:** H
**0.25% Pb:** No
**Renewed:** 27-Sep-2018
**Model:** U007M1PCQT
**Meters:**
**Spare Parts Only:** No
**Bypass:**

---

**Type:** DC
**Size:** 3/4
**Manual:** 8
**Approved:** 30-Aug-1993
**Shutoffs:** (vv),xx,ooo,hhhh,pppp
**Manufacturer:** Watts
**Orientation:** H
**0.25% Pb:** No
**Renewed:** 28-Aug-2017
**Model:** U007M1QT
**Meters:**
**Spare Parts Only:** No
**Bypass:**

---

**Type:** DC
**Size:** 1
**Manual:** 8
**Approved:** 30-Aug-1993
**Shutoffs:** (vv),xx,ooo,hhhh,pppp
**Manufacturer:** Watts
**Orientation:** H
**0.25% Pb:** No
**Renewed:** 30-Aug-2017
**Model:** U007M1QT
**Meters:**
**Spare Parts Only:** No
**Bypass:**

---

**Type:** DC
**Size:** 1 1/2
**Manual:** 8
**Approved:** 20-Oct-1993
**Shutoffs:** vv,xx,ooo,hhhh,pppp
**Manufacturer:** Watts
**Orientation:** H
**0.25% Pb:** No
**Renewed:** 20-Oct-2017
**Model:** U007M1QT
**Meters:**
**Spare Parts Only:** Yes
**Bypass:**

**Type:** DC
**Size:** 2
**Manual:** 8
**Approved:** 20-Oct-1993
**Shutoffs:** (vv),xx,ooo,hhhh,pppp
**Manufacturer:** Watts
**Orientation:** H
**0.25% Pb:** No
**Renewed:** 20-Oct-2017
**Model:** U007M1QT
**Meters:**
**Spare Parts Only:** No
**Bypass:**

---

**Type:** DC
**Size:** 1 1/2
**Manual:** 8
**Approved:** 06-Sep-1994
**Shutoffs:** (vv),xx,ooo,hhhh,pppp
**Manufacturer:** Watts
**Orientation:** VDVD
**0.25% Pb:** No
**Renewed:** 06-Sep-2018
**Model:** U007M2AQT
**Meters:**
**Spare Parts Only:** No
**Bypass:**

---

**Type:** DC
**Size:** 1 1/2
**Manual:** 8
**Approved:** 06-Sep-1994
**Shutoffs:** (vv),xx,ooo,hhhh,pppp
**Manufacturer:** Watts
**Orientation:** VDVU
**0.25% Pb:** No
**Renewed:** 06-Sep-2018
**Model:** U007M2AQT
**Meters:**
**Spare Parts Only:** No
**Bypass:**

---

**Type:** DC
**Size:** 1 1/2
**Manual:** 8
**Approved:** 06-Sep-1994
**Shutoffs:** (vv),xx,ooo,hhhh,pppp
**Manufacturer:** Watts
**Orientation:** VUVD
**0.25% Pb:** No
**Renewed:** 06-Sep-2018
**Model:** U007M2AQT
**Meters:**
**Spare Parts Only:** No
**Bypass:**

---

**Type:** DC
**Size:** 1 1/2
**Manual:** 8
**Approved:** 06-Sep-1994
**Shutoffs:** (vv),xx,ooo,hhhh,pppp
**Manufacturer:** Watts
**Orientation:** VUVU
**0.25% Pb:** No
**Renewed:** 06-Sep-2018
**Model:** U007M2AQT
**Meters:**
**Spare Parts Only:** No
**Bypass:**

---

**Type:** DC
**Size:** 1 1/4
**Manual:** 8
**Approved:** 01-Oct-1996
**Shutoffs:** (vv),xx,ooo,hhhh,pppp
**Manufacturer:** Watts
**Orientation:** H
**0.25% Pb:** No
**Renewed:** 01-Oct-2017
**Model:** U007M2QT
**Meters:**
**Spare Parts Only:** No
**Bypass:**

---

**Type:** DC
**Size:** 1 1/2
**Manual:** 8
**Approved:** 06-Sep-1994
**Shutoffs:** (vv),xx,ooo,hhhh,pppp
**Manufacturer:** Watts
**Orientation:** H
**0.25% Pb:** No
**Renewed:** 06-Sep-2018
**Model:** U007M2QT
**Meters:**
**Spare Parts Only:** No
**Bypass:**


2018 © University of Southern California

**Type:** DC
**Size:** 3/4
**Manual:** 8
**Approved:** 10-Dec-1993
**Shutoffs:** vv,xx,ooo,hhhh,pppp
**Manufacturer:** Watts
**Orientation:** H
**0.25% Pb:** No
**Renewed:** 10-Dec-2017
**Model:** U007PCQT
**Meters:**
**Spare Parts Only:** Yes
**Bypass:**

---

**Type:** DC
**Size:** 1
**Manual:** 8
**Approved:** 10-Dec-1993
**Shutoffs:** vv,xx,ooo,hhhh,pppp
**Manufacturer:** Watts
**Orientation:** H
**0.25% Pb:** No
**Renewed:** 10-Dec-2017
**Model:** U007PCQT
**Meters:**
**Spare Parts Only:** Yes
**Bypass:**

---

**Type:** DC
**Size:** 1 1/2
**Manual:** 8
**Approved:** 27-Sep-1994
**Shutoffs:** vv,xx,ooo,hhhh,pppp
**Manufacturer:** Watts
**Orientation:** H
**0.25% Pb:** No
**Renewed:** 27-Sep-2018
**Model:** U007PCQT
**Meters:**
**Spare Parts Only:** Yes
**Bypass:**

---

**Type:** DC
**Size:** 2
**Manual:** 8
**Approved:** 27-Sep-1994
**Shutoffs:** vv,xx,ooo,hhhh,pppp
**Manufacturer:** Watts
**Orientation:** H
**0.25% Pb:** No
**Renewed:** 27-Sep-2018
**Model:** U007PCQT
**Meters:**
**Spare Parts Only:** Yes
**Bypass:**

---

**Type:** DC
**Size:** 1/2
**Manual:** 9
**Approved:** 08-Mar-1999
**Shutoffs:** (vv),xx,ooo,hhhh,pppp
**Manufacturer:** Watts
**Orientation:** H
**0.25% Pb:** No
**Renewed:** 08-Mar-2017
**Model:** U007QT
**Meters:**
**Spare Parts Only:** No
**Bypass:**

---

**Type:** DC
**Size:** 1/2
**Manual:** 9
**Approved:** 08-Mar-1999
**Shutoffs:** (vv),xx,ooo,hhhh,pppp
**Manufacturer:** Watts
**Orientation:** VU
**0.25% Pb:** No
**Renewed:** 08-Mar-2017
**Model:** U007QT
**Meters:**
**Spare Parts Only:** No
**Bypass:**

---

**Type:** DC
**Size:** 3/4
**Manual:** 7
**Approved:** 11-Jan-1988
**Shutoffs:** vv,xx,ooo,hhhh,pppp
**Manufacturer:** Watts
**Orientation:** H
**0.25% Pb:** No
**Renewed:** 11-Jan-2018
**Model:** U007QT
**Meters:**
**Spare Parts Only:** Yes
**Bypass:**

**Type:** DC
**Size:** 1
**Manual:** 7
**Approved:** 11-Jan-1988
**Shutoffs:** vv,xx,ooo,hhhh,pppp
**Manufacturer:** Watts
**Orientation:** H
**0.25% Pb:** No
**Renewed:** 11-Jan-2018
**Model:** U007QT
**Meters:**
**Spare Parts Only:** Yes
**Bypass:**

---

**Type:** DC
**Size:** 1 1/2
**Manual:** 7
**Approved:** 21-Jul-1988
**Shutoffs:** vv,xx,ooo,hhhh,pppp
**Manufacturer:** Watts
**Orientation:** H
**0.25% Pb:** No
**Renewed:** 21-Jul-2018
**Model:** U007QT
**Meters:**
**Spare Parts Only:** Yes
**Bypass:**

---

**Type:** DC
**Size:** 2
**Manual:** 7
**Approved:** 21-Jul-1988
**Shutoffs:** vv,xx,ooo,hhhh,pppp
**Manufacturer:** Watts
**Orientation:** H
**0.25% Pb:** No
**Renewed:** 21-Jul-2018
**Model:** U007QT
**Meters:**
**Spare Parts Only:** Yes
**Bypass:**

---

**Type:** DC
**Size:** 3/4
**Manual:** 8
**Approved:** 10-Dec-1993
**Shutoffs:** vv,xx,pppp
**Manufacturer:** Watts
**Orientation:** H
**0.25% Pb:** No
**Renewed:** 10-Dec-2017
**Model:** U007SSPCQT
**Meters:**
**Spare Parts Only:** Yes
**Bypass:**

---

**Type:** DC
**Size:** 1
**Manual:** 8
**Approved:** 10-Dec-1993
**Shutoffs:** vv,xx,pppp
**Manufacturer:** Watts
**Orientation:** H
**0.25% Pb:** No
**Renewed:** 10-Dec-2017
**Model:** U007SSPCQT
**Meters:**
**Spare Parts Only:** Yes
**Bypass:**

---

**Type:** DC
**Size:** 1 1/2
**Manual:** 8
**Approved:** 27-Sep-1994
**Shutoffs:** vv,xx,pppp
**Manufacturer:** Watts
**Orientation:** H
**0.25% Pb:** No
**Renewed:** 27-Sep-2018
**Model:** U007SSPCQT
**Meters:**
**Spare Parts Only:** Yes
**Bypass:**

---

**Type:** DC
**Size:** 2
**Manual:** 8
**Approved:** 27-Sep-1994
**Shutoffs:** vv,xx,pppp
**Manufacturer:** Watts
**Orientation:** H
**0.25% Pb:** No
**Renewed:** 27-Sep-2018
**Model:** U007SSPCQT
**Meters:**
**Spare Parts Only:** Yes
**Bypass:**


2018 © University of Southern California

**Type:** DC
**Manufacturer:** Watts
**Model:** U007SSQT
**Size:** 3/4
**Orientation:** H
**Meters:**
**Manual:** 7
**0.25% Pb:** No
**Spare Parts Only:** Yes
**Approved:** 11-Jan-1988
**Renewed:** 11-Jan-2018
**Bypass:**
**Shutoffs:** vv,xx,pppp

---

**Type:** DC
**Manufacturer:** Watts
**Model:** U007SSQT
**Size:** 1
**Orientation:** H
**Meters:**
**Manual:** 7
**0.25% Pb:** No
**Spare Parts Only:** Yes
**Approved:** 11-Jan-1988
**Renewed:** 11-Jan-2018
**Bypass:**
**Shutoffs:** vv,xx,pppp

---

**Type:** DC
**Manufacturer:** Watts
**Model:** U007SSQT
**Size:** 1 1/2
**Orientation:** H
**Meters:**
**Manual:** 7
**0.25% Pb:** No
**Spare Parts Only:** Yes
**Approved:** 21-Jul-1988
**Renewed:** 21-Jul-2018
**Bypass:**
**Shutoffs:** vv,xx,pppp

---

**Type:** DC
**Manufacturer:** Watts
**Model:** U007SSQT
**Size:** 2
**Orientation:** H
**Meters:**
**Manual:** 7
**0.25% Pb:** No
**Spare Parts Only:** Yes
**Approved:** 21-Jul-1988
**Renewed:** 21-Jul-2018
**Bypass:**
**Shutoffs:** vv,xx,pppp

---

**Type:** DC
**Manufacturer:** Watts
**Model:** U719QT
**Size:** 1/2
**Orientation:**
**Meters:**
**Manual:**
**0.25% Pb:** No
**Spare Parts Only:** No
**Approved:**
**Renewed:**
**Bypass:**
**Notes:** model designation changed to U719QTR10

---

**Type:** DC
**Manufacturer:** Watts
**Model:** U719QT
**Size:** 1/2
**Orientation:**
**Meters:**
**Manual:**
**0.25% Pb:** No
**Spare Parts Only:** No
**Approved:**
**Renewed:**
**Bypass:**
**Notes:** model designation changed to U719QTR10

---

**Type:** DC
**Manufacturer:** Watts
**Model:** U719QT
**Size:** 1/2
**Orientation:**
**Meters:**
**Manual:**
**0.25% Pb:** No
**Spare Parts Only:** No
**Approved:**
**Renewed:**
**Bypass:**
**Notes:** model designation changed to U719QTR10

**Type:** DC
**Manufacturer:** Watts
**Model:** U719QT
**Size:** 3/4
**Orientation:**
**Meters:**
**Manual:**
**0.25% Pb:** No
**Spare Parts Only:** No
**Approved:**
**Renewed:**
**Bypass:**
**Notes:** model designation changed to U719QTR10

---

**Type:** DC
**Manufacturer:** Watts
**Model:** U719QT
**Size:** 3/4
**Orientation:**
**Meters:**
**Manual:**
**0.25% Pb:** No
**Spare Parts Only:** No
**Approved:**
**Renewed:**
**Bypass:**
**Notes:** model designation changed to U719QTR10

---

**Type:** DC
**Manufacturer:** Watts
**Model:** U719QT
**Size:** 3/4
**Orientation:**
**Meters:**
**Manual:**
**0.25% Pb:** No
**Spare Parts Only:** No
**Approved:**
**Renewed:**
**Bypass:**
**Notes:** model designation changed to U719QTR10

---

**Type:** DC
**Manufacturer:** Watts
**Model:** U719QT
**Size:** 1
**Orientation:** H
**Meters:**
**Manual:** 9
**0.25% Pb:** No
**Spare Parts Only:** No
**Approved:** 04-Oct-2005
**Renewed:** 04-Oct-2017
**Bypass:**
**Shutoffs:** (vv),xx,ooo,hhhh,pppp

---

**Type:** DC
**Manufacturer:** Watts
**Model:** U719QT
**Size:** 1
**Orientation:** VD
**Meters:**
**Manual:** 9
**0.25% Pb:** No
**Spare Parts Only:** No
**Approved:** 04-Oct-2005
**Renewed:** 04-Oct-2017
**Bypass:**
**Shutoffs:** (vv),xx,ooo,hhhh,pppp

---

**Type:** DC
**Manufacturer:** Watts
**Model:** U719QT
**Size:** 1
**Orientation:** VU
**Meters:**
**Manual:** 9
**0.25% Pb:** No
**Spare Parts Only:** No
**Approved:** 04-Oct-2005
**Renewed:** 04-Oct-2017
**Bypass:**
**Shutoffs:** (vv),xx,ooo,hhhh,pppp

---

**Type:** DC
**Manufacturer:** Watts
**Model:** U719QT
**Size:** 1 1/4
**Orientation:** H
**Meters:**
**Manual:** 9
**0.25% Pb:** No
**Spare Parts Only:** No
**Approved:** 04-Oct-2005
**Renewed:** 04-Oct-2017
**Bypass:**
**Shutoffs:** (vv),xx,ooo,hhhh,pppp


2018 © University of Southern California

**Type:** DC
**Size:** 1 1/4
**Manual:** 9
**Approved:** 04-Oct-2005
**Shutoffs:** (vv),xx,ooo,hhhh,pppp
**Manufacturer:** Watts
**Orientation:** VD
**0.25% Pb:** No
**Renewed:** 04-Oct-2017
**Model:** U719QT
**Meters:**
**Spare Parts Only:** No
**Bypass:**

---

**Type:** DC
**Size:** 1 1/4
**Manual:** 9
**Approved:** 04-Oct-2005
**Shutoffs:** (vv),xx,ooo,hhhh,pppp
**Manufacturer:** Watts
**Orientation:** VU
**0.25% Pb:** No
**Renewed:** 04-Oct-2017
**Model:** U719QT
**Meters:**
**Spare Parts Only:** No
**Bypass:**

---

**Type:** DC
**Size:** 1 1/2
**Manual:** 9
**Approved:** 04-Oct-2005
**Shutoffs:** (vv),xx,ooo,hhhh,pppp
**Manufacturer:** Watts
**Orientation:** H
**0.25% Pb:** No
**Renewed:** 04-Oct-2017
**Model:** U719QT
**Meters:**
**Spare Parts Only:** No
**Bypass:**

---

**Type:** DC
**Size:** 1 1/2
**Manual:** 9
**Approved:** 04-Oct-2005
**Shutoffs:** (vv),xx,ooo,hhhh,pppp
**Manufacturer:** Watts
**Orientation:** VD
**0.25% Pb:** No
**Renewed:** 04-Oct-2017
**Model:** U719QT
**Meters:**
**Spare Parts Only:** No
**Bypass:**

---

**Type:** DC
**Size:** 1 1/2
**Manual:** 9
**Approved:** 04-Oct-2005
**Shutoffs:** (vv),xx,ooo,hhhh,pppp
**Manufacturer:** Watts
**Orientation:** VU
**0.25% Pb:** No
**Renewed:** 04-Oct-2017
**Model:** U719QT
**Meters:**
**Spare Parts Only:** No
**Bypass:**

---

**Type:** DC
**Size:** 2
**Manual:** 9
**Approved:** 04-Oct-2005
**Shutoffs:** (vv),xx,ooo,hhhh,pppp
**Manufacturer:** Watts
**Orientation:** H
**0.25% Pb:** No
**Renewed:** 04-Oct-2017
**Model:** U719QT
**Meters:**
**Spare Parts Only:** No
**Bypass:**

---

**Type:** DC
**Size:** 2
**Manual:** 9
**Approved:** 04-Oct-2005
**Shutoffs:** (vv),xx,ooo,hhhh,pppp
**Manufacturer:** Watts
**Orientation:** VD
**0.25% Pb:** No
**Renewed:** 04-Oct-2017
**Model:** U719QT
**Meters:**
**Spare Parts Only:** No
**Bypass:**

**Type:** DC
**Size:** 2
**Manual:** 9
**Approved:** 04-Oct-2005
**Shutoffs:** (vv),xx,ooo,hhhh,pppp
**Manufacturer:** Watts
**Orientation:** VU
**0.25% Pb:** No
**Renewed:** 04-Oct-2017
**Model:** U719QT
**Meters:**
**Spare Parts Only:** No
**Bypass:**

---

**Type:** DC
**Size:** 1/2
**Manual:** 9
**Approved:** 04-Oct-2005
**Shutoffs:** (vv),xx,ooo,hhhh,pppp
**Notes:** formerly U719QT
**Manufacturer:** Watts
**Orientation:** H
**0.25% Pb:** No
**Renewed:** 04-Oct-2017
**Model:** U719QTR10
**Meters:**
**Spare Parts Only:** Yes
**Bypass:**

---

**Type:** DC
**Size:** 1/2
**Manual:** 9
**Approved:** 04-Oct-2005
**Shutoffs:** (vv),xx,ooo,hhhh,pppp
**Notes:** formerly U719QT
**Manufacturer:** Watts
**Orientation:** VD
**0.25% Pb:** No
**Renewed:** 04-Oct-2017
**Model:** U719QTR10
**Meters:**
**Spare Parts Only:** Yes
**Bypass:**

---

**Type:** DC
**Size:** 1/2
**Manual:** 9
**Approved:** 04-Oct-2005
**Shutoffs:** (vv),xx,ooo,hhhh,pppp
**Notes:** formerly U719QT
**Manufacturer:** Watts
**Orientation:** VU
**0.25% Pb:** No
**Renewed:** 04-Oct-2017
**Model:** U719QTR10
**Meters:**
**Spare Parts Only:** Yes
**Bypass:**

---

**Type:** DC
**Size:** 3/4
**Manual:** 9
**Approved:** 04-Oct-2005
**Shutoffs:** (vv),xx,ooo,hhhh,pppp
**Notes:** formerly U719QT
**Manufacturer:** Watts
**Orientation:** H
**0.25% Pb:** No
**Renewed:** 04-Oct-2017
**Model:** U719QTR10
**Meters:**
**Spare Parts Only:** Yes
**Bypass:**

---

**Type:** DC
**Size:** 3/4
**Manual:** 9
**Approved:** 04-Oct-2005
**Shutoffs:** (vv),xx,ooo,hhhh,pppp
**Notes:** formerly U719QT
**Manufacturer:** Watts
**Orientation:** VD
**0.25% Pb:** No
**Renewed:** 04-Oct-2017
**Model:** U719QTR10
**Meters:**
**Spare Parts Only:** Yes
**Bypass:**


2018 © University of Southern California

**Type:** DC
**Manufacturer:** Watts
**Model:** U719QTR10
**Size:** 3/4
**Orientation:** VU
**Meters:**
**Manual:** 9
**0.25% Pb:** No
**Spare Parts Only:** Yes
**Approved:** 04-Oct-2005
**Renewed:** 04-Oct-2017
**Bypass:**
**Shutoffs:** (vv),xx,ooo,hhhh,pppp
**Notes:** formerly U719QT

---

**Type:** DC
**Manufacturer:** Wilkins
**Model:** 350
**Size:** 3/4
**Orientation:** H
**Meters:**
**Manual:** 9
**0.25% Pb:** No
**Spare Parts Only:** No
**Approved:** 06-Jul-2005
**Renewed:** 06-Jul-2017
**Bypass:**
**Shutoffs:** (ii),ooo
**Notes:** Testcocks: Female Threaded End or 45 degree male SAE flare

---

**Type:** DC
**Manufacturer:** Wilkins
**Model:** 350
**Size:** 3/4
**Orientation:** VU
**Meters:**
**Manual:** 9
**0.25% Pb:** No
**Spare Parts Only:** No
**Approved:** 06-Jul-2005
**Renewed:** 06-Jul-2017
**Bypass:**
**Shutoffs:** (ii),ooo
**Notes:** Testcocks: Female Threaded End or 45 degree male SAE flare

---

**Type:** DC
**Manufacturer:** Wilkins
**Model:** 350
**Size:** 1
**Orientation:** H
**Meters:**
**Manual:** 9
**0.25% Pb:** No
**Spare Parts Only:** No
**Approved:** 21-Apr-2006
**Renewed:** 21-Apr-2018
**Bypass:**
**Shutoffs:** (ii),ooo
**Notes:** Testcocks: Female Threaded End or 45 degree male SAE flare

---

**Type:** DC
**Manufacturer:** Wilkins
**Model:** 350
**Size:** 1
**Orientation:** VU
**Meters:**
**Manual:** 9
**0.25% Pb:** No
**Spare Parts Only:** No
**Approved:** 21-Apr-2006
**Renewed:** 21-Apr-2018
**Bypass:**
**Shutoffs:** (ii),ooo
**Notes:** Testcocks: Female Threaded End or 45 degree male SAE flare

---

**Type:** DC
**Manufacturer:** Wilkins
**Model:** 350
**Size:** 1 1/4
**Orientation:** H
**Meters:**
**Manual:** 9
**0.25% Pb:** No
**Spare Parts Only:** No
**Approved:** 08-Jan-2009
**Renewed:** 08-Jan-2018
**Bypass:**
**Shutoffs:** (int)

**Type:** DC
**Manufacturer:** Wilkins
**Model:** 350
**Size:** 1 1/4
**Orientation:** VU
**Meters:**
**Manual:** 9
**0.25% Pb:** No
**Spare Parts Only:** No
**Approved:** 08-Jan-2009
**Renewed:** 08-Jan-2018
**Bypass:**
**Shutoffs:** (int)

---

**Type:** DC
**Manufacturer:** Wilkins
**Model:** 350
**Size:** 1 1/2
**Orientation:** H
**Meters:**
**Manual:** 9
**0.25% Pb:** No
**Spare Parts Only:** No
**Approved:** 08-Jan-2009
**Renewed:** 08-Jan-2018
**Bypass:**
**Shutoffs:** (int)

---

**Type:** DC
**Manufacturer:** Wilkins
**Model:** 350
**Size:** 1 1/2
**Orientation:** VU
**Meters:**
**Manual:** 9
**0.25% Pb:** No
**Spare Parts Only:** No
**Approved:** 08-Jan-2009
**Renewed:** 08-Jan-2018
**Bypass:**
**Shutoffs:** (int)

---

**Type:** DC
**Manufacturer:** Wilkins
**Model:** 350
**Size:** 2
**Orientation:** H
**Meters:**
**Manual:** 9
**0.25% Pb:** No
**Spare Parts Only:** No
**Approved:** 08-Jan-2009
**Renewed:** 08-Jan-2018
**Bypass:**
**Shutoffs:** (int)

---

**Type:** DC
**Manufacturer:** Wilkins
**Model:** 350
**Size:** 2
**Orientation:** VU
**Meters:**
**Manual:** 9
**0.25% Pb:** No
**Spare Parts Only:** No
**Approved:** 08-Jan-2009
**Renewed:** 08-Jan-2018
**Bypass:**
**Shutoffs:** (int)

---

**Type:** DC
**Manufacturer:** Wilkins
**Model:** 350
**Size:** 2 1/2
**Orientation:** H
**Meters:**
**Manual:** 9
**0.25% Pb:** No
**Spare Parts Only:** No
**Approved:** 05-Sep-2001
**Renewed:** 05-Sep-2016
**Bypass:**
**Shutoffs:**
(gg),ee,ff,hh,ll,mm,tt,uu,yy,zz,ppp,qqq,zzz,dddd,ssss,tttt,vvvv,wwww,yyyy,zzzz,kkkkk,gggggg,hhhhhh,jjjjjj,kkkkkk,mmmmmm,nnnnnn
**Notes:** Up to serial number J35214


2018 © University of Southern California

**Type:** DC **Manufacturer:** Wilkins **Model:** 350
**Size:** 2 1/2 **Orientation:** H **Meters:**
**Manual:** 9 **0.25% Pb:** Yes **Spare Parts Only:** No
**Approved:** 09-Sep-2010 **Renewed:** 09-Sep-2016 **Bypass:**
**Shutoffs:** (gg),hh,ppp,qqq,ssss,tttt,vvvv,wwww,yyyy,zzzz,kkkkk,gggggg,hhhhhh,jjjjjj,kkkkkk,mmmmmm,nnnnnn
**Notes:** Serial number J35214 and higher

---

**Type:** DC **Manufacturer:** Wilkins **Model:** 350
**Size:** 2 1/2 **Orientation:** VU **Meters:**
**Manual:** 9 **0.25% Pb:** No **Spare Parts Only:** No
**Approved:** 03-Apr-2002 **Renewed:** 03-Apr-2017 **Bypass:**
**Shutoffs:** (gg),hh,ppp,qqq,ssss,tttt,vvvv,wwww,yyyy,zzzz,kkkkk,gggggg,hhhhhh,jjjjjj,kkkkkk,mmmmmm,nnnnnn
**Notes:** Up to serial number J35214

---

**Type:** DC **Manufacturer:** Wilkins **Model:** 350
**Size:** 2 1/2 **Orientation:** VU **Meters:**
**Manual:** 9 **0.25% Pb:** Yes **Spare Parts Only:** No
**Approved:** 09-Sep-2010 **Renewed:** 09-Sep-2016 **Bypass:**
**Shutoffs:**
(gg),ee,ff,hh,ll,mm,tt,uu,yy,zz,ppp,qqq,zzz,dddd,ssss,tttt,vvvv,wwww,yyyy,zzzz,kkkkk,gggggg,hhhhhh,jjjjjj,kkkkkk,mmmmmm,nnnnnn
**Notes:** Serial number J35214 and higher

---

**Type:** DC **Manufacturer:** Wilkins **Model:** 350
**Size:** 3 **Orientation:** H **Meters:**
**Manual:** 9 **0.25% Pb:** No **Spare Parts Only:** No
**Approved:** 05-Sep-2001 **Renewed:** 05-Sep-2016 **Bypass:**
**Shutoffs:**
(gg),ee,ff,hh,ll,mm,tt,uu,yy,zz,ppp,qqq,zzz,dddd,ssss,tttt,vvvv,wwww,yyyy,zzzz,kkkkk,gggggg,hhhhhh,jjjjjj,kkkkkk,mmmmmm,nnnnnn
**Notes:** Up to serial number J35214

---

**Type:** DC **Manufacturer:** Wilkins **Model:** 350
**Size:** 3 **Orientation:** H **Meters:**
**Manual:** 9 **0.25% Pb:** Yes **Spare Parts Only:** No
**Approved:** 09-Sep-2010 **Renewed:** 09-Sep-2016 **Bypass:**
**Shutoffs:** (gg),hh,ppp,qqq,ssss,tttt,vvvv,wwww,yyyy,zzzz,kkkkk,gggggg,hhhhhh,jjjjjj,kkkkkk,mmmmmm,nnnnnn
**Notes:** Serial number J35214 and higher

**Type:** DC **Manufacturer:** Wilkins **Model:** 350
**Size:** 3 **Orientation:** VU **Meters:**
**Manual:** 9 **0.25% Pb:** No **Spare Parts Only:** No
**Approved:** 03-Apr-2002 **Renewed:** 03-Apr-2017 **Bypass:**
**Shutoffs:**
(gg),ee,ff,hh,ll,mm,tt,uu,yy,zz,ppp,qqq,zzz,dddd,ssss,tttt,vvvv,wwww,yyyy,zzzz,kkkkk,gggggg,hhhhhh,jjjjjj,kkkkkk,mmmmmm,nnnnnn
**Notes:** Up to serial number J35214

---

**Type:** DC **Manufacturer:** Wilkins **Model:** 350
**Size:** 3 **Orientation:** VU **Meters:**
**Manual:** 9 **0.25% Pb:** Yes **Spare Parts Only:** No
**Approved:** 09-Sep-2010 **Renewed:** 09-Sep-2016 **Bypass:**
**Shutoffs:** (gg),hh,ppp,qqq,ssss,tttt,vvvv,wwww,yyyy,zzzz,kkkkk,gggggg,hhhhhh,jjjjjj,kkkkkk,mmmmmm,nnnnnn
**Notes:** Serial number J35214 and higher

---

**Type:** DC **Manufacturer:** Wilkins **Model:** 350
**Size:** 4 **Orientation:** H **Meters:**
**Manual:** 9 **0.25% Pb:** No **Spare Parts Only:** No
**Approved:** 15-Sep-1999 **Renewed:** 15-Sep-2017 **Bypass:**
**Shutoffs:**
(gg),ee,ff,hh,ll,mm,tt,uu,yy,zz,ppp,qqq,vvv,www,zzz,dddd,eeee,ssss,tttt,vvvv,wwww,yyyy,zzzz,kkkkk,gggggg,hhhhhh,jjjjjj,kkkkkk,mmmmmm,nnnnnn
**Notes:** Up to serial number J35214

---

**Type:** DC **Manufacturer:** Wilkins **Model:** 350
**Size:** 4 **Orientation:** H **Meters:**
**Manual:** 9 **0.25% Pb:** Yes **Spare Parts Only:** No
**Approved:** 09-Sep-2010 **Renewed:** 09-Sep-2016 **Bypass:**
**Shutoffs:** (gg),hh,ppp,qqq,vvv,www,ssss,tttt,vvvv,wwww,yyyy,zzzz,kkkkk,gggggg,hhhhhh,jjjjjj,kkkkkk,mmmmmm,nnnnnn
**Notes:** Serial number J35214 and higher

---

**Type:** DC **Manufacturer:** Wilkins **Model:** 350
**Size:** 4 **Orientation:** VU **Meters:**
**Manual:** 9 **0.25% Pb:** No **Spare Parts Only:** No
**Approved:** 07-Sep-2000 **Renewed:** 07-Sep-2018 **Bypass:**
**Shutoffs:**
(gg),ee,ff,hh,ll,mm,tt,uu,yy,zz,ppp,qqq,vvv,www,zzz,dddd,eeee,ssss,tttt,vvvv,wwww,yyyy,zzzz,kkkkk,gggggg,hhhhhh,jjjjjj,kkkkkk,mmmmmm,nnnnnn
**Notes:** Up to serial number J35214


2018 © University of Southern California

**Type:** DC **Manufacturer:** Wilkins **Model:** 350
**Size:** 4 **Orientation:** VU **Meters:**
**Manual:** 9 **0.25% Pb:** Yes **Spare Parts Only:** No
**Approved:** 09-Sep-2010 **Renewed:** 09-Sep-2016 **Bypass:**
**Shutoffs:** (gg),hh,ppp,qqq,vvv,www,ssss,tttt,vvvv,wwww,yyyy,zzzz,kkkkk,gggggg,hhhhhh,jjjjjj,kkkkkk,mmmmmm,nnnnnn
**Notes:** Serial number J35214 and higher

---

**Type:** DC **Manufacturer:** Wilkins **Model:** 350
**Size:** 6 **Orientation:** H **Meters:**
**Manual:** 9 **0.25% Pb:** No **Spare Parts Only:** No
**Approved:** 18-Oct-1999 **Renewed:** 18-Oct-2017 **Bypass:**
**Shutoffs:**
(gg),ee,ff,hh,ll,mm,tt,uu,yy,zz,ppp,qqq,vvv,www,zzz,dddd,eeee,ssss,tttt,vvvv,wwww,yyyy,zzzz,kkkkk,gggggg,hhhhhh,jjjjjj,kkkkkk,mmmmmm,nnnnnn
**Notes:** Up to serial number J35214

---

**Type:** DC **Manufacturer:** Wilkins **Model:** 350
**Size:** 6 **Orientation:** H **Meters:**
**Manual:** 9 **0.25% Pb:** Yes **Spare Parts Only:** No
**Approved:** 09-Sep-2010 **Renewed:** 09-Sep-2016 **Bypass:**
**Shutoffs:** (gg),hh,ppp,qqq,vvv,www,ssss,tttt,vvvv,wwww,yyyy,zzzz,kkkkk,gggggg,hhhhhh,jjjjjj,kkkkkk,mmmmmm,nnnnnn
**Notes:** Serial number J35214 and higher

---

**Type:** DC **Manufacturer:** Wilkins **Model:** 350
**Size:** 6 **Orientation:** VU **Meters:**
**Manual:** 9 **0.25% Pb:** No **Spare Parts Only:** No
**Approved:** 17-Dec-1999 **Renewed:** 17-Dec-2017 **Bypass:**
**Shutoffs:**
(gg),ee,ff,hh,ll,mm,tt,uu,yy,zz,ppp,qqq,vvv,www,zzz,dddd,eeee,ssss,tttt,vvvv,wwww,yyyy,zzzz,kkkkk,gggggg,hhhhhh,jjjjjj,kkkkkk,mmmmmm,nnnnnn
**Notes:** Up to serial number J35214

---

**Type:** DC **Manufacturer:** Wilkins **Model:** 350
**Size:** 6 **Orientation:** VU **Meters:**
**Manual:** 9 **0.25% Pb:** Yes **Spare Parts Only:** No
**Approved:** 09-Sep-2010 **Renewed:** 09-Sep-2016 **Bypass:**
**Shutoffs:** (gg),hh,ppp,qqq,vvv,www,ssss,tttt,vvvv,wwww,yyyy,zzzz,kkkkk,gggggg,hhhhhh,jjjjjj,kkkkkk,mmmmmm,nnnnnn
**Notes:** Serial number J35214 and higher

**Type:** DC **Manufacturer:** Wilkins **Model:** 350
**Size:** 8 **Orientation:** H **Meters:**
**Manual:** 9 **0.25% Pb:** No **Spare Parts Only:** No
**Approved:** 08-Mar-2002 **Renewed:** 08-Mar-2017 **Bypass:**
**Shutoffs:**
(gg),ee,ff,hh,ll,mm,tt,uu,yy,zz,ppp,qqq,vvv,www,zzz,dddd,eeee,ssss,tttt,vvvv,wwww,yyyy,zzzz,kkkkk,gggggg,hhhhhh,jjjjjj,kkkkkk,mmmmmm,nnnnnn
**Notes:** Up to serial number J35214

---

**Type:** DC **Manufacturer:** Wilkins **Model:** 350
**Size:** 8 **Orientation:** H **Meters:**
**Manual:** 9 **0.25% Pb:** Yes **Spare Parts Only:** No
**Approved:** 09-Sep-2010 **Renewed:** 09-Sep-2016 **Bypass:**
**Shutoffs:** (gg),hh,ppp,qqq,vvv,www,ssss,tttt,vvvv,wwww,yyyy,zzzz,kkkkk,gggggg,hhhhhh,jjjjjj,kkkkkk,mmmmmm,nnnnnn
**Notes:** Serial number J35214 and higher

---

**Type:** DC **Manufacturer:** Wilkins **Model:** 350
**Size:** 8 **Orientation:** VU **Meters:**
**Manual:** 9 **0.25% Pb:** No **Spare Parts Only:** No
**Approved:** 16-Jan-2003 **Renewed:** 16-Jan-2018 **Bypass:**
**Shutoffs:**
(gg),ee,ff,hh,ll,mm,tt,uu,yy,zz,ppp,qqq,vvv,www,zzz,dddd,eeee,ssss,tttt,vvvv,wwww,yyyy,zzzz,kkkkk,gggggg,hhhhhh,jjjjjj,kkkkkk,mmmmmm,nnnnnn
**Notes:** Up to serial number J35214

---

**Type:** DC **Manufacturer:** Wilkins **Model:** 350
**Size:** 8 **Orientation:** VU **Meters:**
**Manual:** 9 **0.25% Pb:** Yes **Spare Parts Only:** No
**Approved:** 09-Sep-2010 **Renewed:** 09-Sep-2016 **Bypass:**
**Shutoffs:** (gg),hh,ppp,qqq,vvv,www,ssss,tttt,vvvv,wwww,yyyy,zzzz,kkkkk,gggggg,hhhhhh,jjjjjj,kkkkkk,mmmmmm,nnnnnn
**Notes:** Serial number J35214 and higher

---

**Type:** DC **Manufacturer:** Wilkins **Model:** 350
**Size:** 10 **Orientation:** H **Meters:**
**Manual:** 9 **0.25% Pb:** No **Spare Parts Only:** No
**Approved:** 28-Aug-2002 **Renewed:** 28-Aug-2017 **Bypass:**
**Shutoffs:**
(gg),ee,ff,hh,ll,mm,tt,uu,yy,zz,ppp,qqq,vvv,www,zzz,dddd,eeee,ssss,tttt,vvvv,wwww,yyyy,zzzz,kkkkk,gggggg,hhhhhh,jjjjjj,kkkkkk,mmmmmm,nnnnnn
**Notes:** Up to serial number J35214


2018 © University of Southern California

**Type:** DC **Manufacturer:** Wilkins **Model:** 350
**Size:** 10 **Orientation:** H **Meters:**
**Manual:** 9 **0.25% Pb:** Yes **Spare Parts Only:** No
**Approved:** 09-Sep-2010 **Renewed:** 09-Sep-2016 **Bypass:**
**Shutoffs:** (gg),hh,ppp,qqq,vvv,www,ssss,tttt,vvvv,wwww,yyyy,zzzz,kkkkk,gggggg,hhhhhh,jjjjjj,kkkkkk,mmmmmm,nnnnnn
**Notes:** Serial number J35214 and higher

---

**Type:** DC **Manufacturer:** Wilkins **Model:** 350
**Size:** 10 **Orientation:** VU **Meters:**
**Manual:** 9 **0.25% Pb:** No **Spare Parts Only:** No
**Approved:** 14-Mar-2003 **Renewed:** 14-Mar-2018 **Bypass:**
**Shutoffs:**
(gg),ee,ff,hh,ll,mm,tt,uu,yy,zz,ppp,qqq,vvv,www,zzz,dddd,eeee,ssss,tttt,vvvv,wwww,yyyy,zzzz,kkkkk,gggggg,hhhhhh,jjjjjj,kkkkkk,mmmmmm,nnnnnn
**Notes:** Up to serial number J35214

---

**Type:** DC **Manufacturer:** Wilkins **Model:** 350
**Size:** 10 **Orientation:** VU **Meters:**
**Manual:** 9 **0.25% Pb:** Yes **Spare Parts Only:** No
**Approved:** 09-Sep-2010 **Renewed:** 09-Sep-2016 **Bypass:**
**Shutoffs:** (gg),hh,ppp,qqq,vvv,www,ssss,tttt,vvvv,wwww,yyyy,zzzz,kkkkk,gggggg,hhhhhh,jjjjjj,kkkkkk,mmmmmm,nnnnnn
**Notes:** Serial number J35214 and higher

---

**Type:** DC **Manufacturer:** Wilkins **Model:** 350
**Size:** 12 **Orientation:** H **Meters:**
**Manual:** 9 **0.25% Pb:** No **Spare Parts Only:** No
**Approved:** 10-Feb-2009 **Renewed:** 10-Feb-2018 **Bypass:**
**Shutoffs:** (hh),ssss,tttt,vvvv,wwww,yyyy,zzzz,kkkkk,gggggg,hhhhhh,jjjjjj,kkkkkk,mmmmmm,nnnnnn
**Notes:** Up to serial number J35214

---

**Type:** DC **Manufacturer:** Wilkins **Model:** 350
**Size:** 12 **Orientation:** H **Meters:**
**Manual:** 9 **0.25% Pb:** Yes **Spare Parts Only:** No
**Approved:** 09-Sep-2010 **Renewed:** 09-Sep-2016 **Bypass:**
**Shutoffs:** (hh),ssss,tttt,vvvv,wwww,yyyy,zzzz,kkkkk,gggggg,hhhhhh,jjjjjj,kkkkkk,mmmmmm,nnnnnn
**Notes:** Serial number J35214 and higher

**Type:** DC **Manufacturer:** Wilkins **Model:** 350A
**Size:** 2 1/2 **Orientation:** H **Meters:**
**Manual:** 9 **0.25% Pb:** No **Spare Parts Only:** No
**Approved:** 22-Jun-2005 **Renewed:** 22-Jun-2017 **Bypass:**
**Shutoffs:**
(ppp),sss,ttt,qqq,yyy,zzz,dddd,ssss,uuuu,vvvv,xxxx,yyyy,aaaaa,kkkkk,lllll,gggggg,iiiiii,jjjjjj,llllll,mmmmmm,oooooo
**Notes:** Up to serial number U26097

---

**Type:** DC **Manufacturer:** Wilkins **Model:** 350A
**Size:** 2 1/2 **Orientation:** H **Meters:**
**Manual:** 9 **0.25% Pb:** Yes **Spare Parts Only:** No
**Approved:** 09-Sep-2010 **Renewed:** 09-Sep-2016 **Bypass:**
**Shutoffs:** (ppp),qqq,sss,ttt,yyy,ssss,uuuu,vvvv,xxxx,yyyy,aaaaa,kkkkk,gggggg,iiiiii,jjjjjj,llllll,mmmmmm,oooooo
**Notes:** Serial number J35214 and higher

---

**Type:** DC **Manufacturer:** Wilkins **Model:** 350A
**Size:** 2 1/2 **Orientation:** VU **Meters:**
**Manual:** 9 **0.25% Pb:** No **Spare Parts Only:** No
**Approved:** 22-Jun-2005 **Renewed:** 22-Jun-2017 **Bypass:**
**Shutoffs:**
(ppp),sss,ttt,qqq,yyy,zzz,dddd,ssss,uuuu,vvvv,xxxx,yyyy,aaaaa,kkkkk,lllll,gggggg,iiiiii,jjjjjj,llllll,mmmmmm,oooooo
**Notes:** Up to serial number U26097

---

**Type:** DC **Manufacturer:** Wilkins **Model:** 350A
**Size:** 2 1/2 **Orientation:** VU **Meters:**
**Manual:** 9 **0.25% Pb:** Yes **Spare Parts Only:** No
**Approved:** 09-Sep-2010 **Renewed:** 09-Sep-2016 **Bypass:**
**Shutoffs:** (ppp),qqq,sss,ttt,yyy,ssss,uuuu,vvvv,xxxx,yyyy,aaaaa,kkkkk,gggggg,iiiiii,jjjjjj,llllll,mmmmmm,oooooo
**Notes:** Serial number U26097 and higher

---

**Type:** DC **Manufacturer:** Wilkins **Model:** 350A
**Size:** 3 **Orientation:** H **Meters:**
**Manual:** 9 **0.25% Pb:** No **Spare Parts Only:** No
**Approved:** 22-Jun-2005 **Renewed:** 22-Jun-2017 **Bypass:**
**Shutoffs:**
(ppp),sss,ttt,qqq,yyy,zzz,dddd,ssss,uuuu,vvvv,xxxx,yyyy,aaaaa,kkkkk,lllll,gggggg,iiiiii,jjjjjj,llllll,mmmmmm,oooooo
**Notes:** Up to serial number U26097


2018 © University of Southern California

**Type:** DC **Manufacturer:** Wilkins **Model:** 350A
**Size:** 3 **Orientation:** H **Meters:**
**Manual:** 9 **0.25% Pb:** Yes **Spare Parts Only:** No
**Approved:** 09-Sep-2010 **Renewed:** 09-Sep-2016 **Bypass:**
**Shutoffs:** (ppp),qqq,sss,ttt,yyy,ssss,uuuu,vvvv,xxxx,yyyy,aaaaa,kkkkk,lllll,gggggg,iiiiii,jjjjjj,llllll,mmmmmm,oooooo
**Notes:** Serial number U26097 and higher

---

**Type:** DC **Manufacturer:** Wilkins **Model:** 350A
**Size:** 3 **Orientation:** VU **Meters:**
**Manual:** 9 **0.25% Pb:** No **Spare Parts Only:** No
**Approved:** 22-Jun-2005 **Renewed:** 22-Jun-2017 **Bypass:**
**Shutoffs:**
(ppp),sss,ttt,qqq,yyy,zzz,dddd,ssss,uuuu,vvvv,xxxx,yyyy,aaaaa,kkkkk,lllll,gggggg,iiiiii,jjjjjj,llllll,mmmmmm,oooooo
**Notes:** Up to serial number U26097

---

**Type:** DC **Manufacturer:** Wilkins **Model:** 350A
**Size:** 3 **Orientation:** VU **Meters:**
**Manual:** 9 **0.25% Pb:** Yes **Spare Parts Only:** No
**Approved:** 09-Sep-2010 **Renewed:** 09-Sep-2016 **Bypass:**
**Shutoffs:** (ppp),qqq,sss,ttt,yyy,ssss,uuuu,vvvv,xxxx,yyyy,aaaaa,kkkkk,lllll,gggggg,iiiiii,jjjjjj,llllll,mmmmmm,oooooo
**Notes:** Serial number U26097 and higher

---

**Type:** DC **Manufacturer:** Wilkins **Model:** 350A
**Size:** 4 **Orientation:** H **Meters:**
**Manual:** 9 **0.25% Pb:** No **Spare Parts Only:** No
**Approved:** 16-Mar-2004 **Renewed:** 16-Mar-2016 **Bypass:**
**Shutoffs:**
(ppp),qqq,sss,ttt,www,yyy,zzz,dddd,eeee,ssss,uuuu,vvvv,xxxx,yyyy,aaaaa,kkkkk,lllll,gggggg,iiiiii,jjjjjj,llllll,mmmmmm,oooooo
**Notes:** Up to serial number U26097

---

**Type:** DC **Manufacturer:** Wilkins **Model:** 350A
**Size:** 4 **Orientation:** H **Meters:**
**Manual:** 9 **0.25% Pb:** Yes **Spare Parts Only:** No
**Approved:** 09-Sep-2010 **Renewed:** 09-Sep-2016 **Bypass:**
**Shutoffs:** (ppp),qqq,sss,ttt,yyy,ssss,uuuu,vvvv,xxxx,yyyy,aaaaa,kkkkk,lllll,gggggg,iiiiii,jjjjjj,llllll,mmmmmm,oooooo
**Notes:** Serial number U26097 and higher

**Type:** DC **Manufacturer:** Wilkins **Model:** 350A
**Size:** 4 **Orientation:** VU **Meters:**
**Manual:** 9 **0.25% Pb:** No **Spare Parts Only:** No
**Approved:** 16-Mar-2004 **Renewed:** 16-Mar-2016 **Bypass:**
**Shutoffs:**
(ppp),qqq,sss,ttt,www,yyy,zzz,dddd,eeee,ssss,uuuu,vvvv,xxxx,yyyy,aaaaa,kkkkk,lllll,gggggg,iiiiii,jjjjjj,llllll,mmmmmm,oooooo
**Notes:** Up to serial number U26097

---

**Type:** DC **Manufacturer:** Wilkins **Model:** 350A
**Size:** 4 **Orientation:** VU **Meters:**
**Manual:** 9 **0.25% Pb:** Yes **Spare Parts Only:** No
**Approved:** 09-Sep-2010 **Renewed:** 09-Sep-2016 **Bypass:**
**Shutoffs:** (ppp),qqq,sss,ttt,yyy,ssss,uuuu,vvvv,xxxx,yyyy,aaaaa,kkkkk,lllll,gggggg,iiiiii,jjjjjj,llllll,mmmmmm,oooooo
**Notes:** Serial number U26097 and higher

---

**Type:** DC **Manufacturer:** Wilkins **Model:** 350A
**Size:** 6 **Orientation:** H **Meters:**
**Manual:** 9 **0.25% Pb:** No **Spare Parts Only:** No
**Approved:** 25-Nov-2003 **Renewed:** 25-Nov-2015 **Bypass:**
**Shutoffs:**
(ppp),qqq,sss,ttt,www,yyy,zzz,dddd,eeee,ssss,uuuu,vvvv,xxxx,yyyy,aaaaa,kkkkk,lllll,gggggg,iiiiii,jjjjjj,llllll,mmmmmm,oooooo
**Notes:** Up to serial number U26097

---

**Type:** DC **Manufacturer:** Wilkins **Model:** 350A
**Size:** 6 **Orientation:** H **Meters:**
**Manual:** 9 **0.25% Pb:** Yes **Spare Parts Only:** No
**Approved:** 09-Sep-2010 **Renewed:** 09-Sep-2016 **Bypass:**
**Shutoffs:** (ppp),qqq,sss,ttt,yyy,ssss,uuuu,vvvv,xxxx,yyyy,aaaaa,kkkkk,lllll,gggggg,iiiiii,jjjjjj,llllll,mmmmmm,oooooo
**Notes:** Serial number U26097 and higher

---

**Type:** DC **Manufacturer:** Wilkins **Model:** 350A
**Size:** 6 **Orientation:** VU **Meters:**
**Manual:** 9 **0.25% Pb:** No **Spare Parts Only:** No
**Approved:** 25-Nov-2003 **Renewed:** 25-Nov-2015 **Bypass:**
**Shutoffs:**
(ppp),qqq,sss,ttt,www,yyy,zzz,dddd,eeee,ssss,uuuu,vvvv,xxxx,yyyy,aaaaa,kkkkk,lllll,gggggg,iiiiii,jjjjjj,llllll,mmmmmm,oooooo
**Notes:** Up to serial number U26097


2018 © University of Southern California

**Type:** DC **Manufacturer:** Wilkins **Model:** 350A
**Size:** 6 **Orientation:** VU **Meters:**
**Manual:** 9 **0.25% Pb:** Yes **Spare Parts Only:** No
**Approved:** 09-Sep-2010 **Renewed:** 09-Sep-2016 **Bypass:**
**Shutoffs:** (ppp),qqq,sss,ttt,yyy,ssss,uuuu,vvvv,xxxx,yyyy,aaaaa,kkkkk,lllll,ggggg,iiiiii,jjjjjj,llllll,mmmmmm,oooooo
**Notes:** Serial number U26097 and higher

---

**Type:** DC **Manufacturer:** Wilkins **Model:** 350A
**Size:** 8 **Orientation:** H **Meters:**
**Manual:** 9 **0.25% Pb:** No **Spare Parts Only:** No
**Approved:** 12-Feb-2004 **Renewed:** 12-Feb-2016 **Bypass:**
**Shutoffs:**
(ppp),qqq,sss,ttt,www,yyy,zzz,dddd,eeee,ssss,uuuu,vvvv,xxxx,yyyy,aaaaa,kkkkk,lllll,ggggg,iiiiii,jjjjjj,llllll,mmmmmm,oooooo
**Notes:** Up to serial number U26097

---

**Type:** DC **Manufacturer:** Wilkins **Model:** 350A
**Size:** 8 **Orientation:** H **Meters:**
**Manual:** 9 **0.25% Pb:** Yes **Spare Parts Only:** No
**Approved:** 09-Sep-2010 **Renewed:** 09-Sep-2016 **Bypass:**
**Shutoffs:** (ppp),qqq,sss,ttt,yyy,ssss,uuuu,vvvv,xxxx,yyyy,aaaaa,kkkkk,lllll,ggggg,iiiiii,jjjjjj,llllll,mmmmmm,oooooo
**Notes:** Serial number U26097 and higher

---

**Type:** DC **Manufacturer:** Wilkins **Model:** 350A
**Size:** 8 **Orientation:** VU **Meters:**
**Manual:** 9 **0.25% Pb:** No **Spare Parts Only:** No
**Approved:** 12-Feb-2004 **Renewed:** 12-Feb-2016 **Bypass:**
**Shutoffs:**
(ppp),qqq,sss,ttt,www,yyy,zzz,dddd,eeee,ssss,uuuu,vvvv,xxxx,yyyy,aaaaa,kkkkk,lllll,ggggg,iiiiii,jjjjjj,llllll,mmmmmm,oooooo
**Notes:** Up to serial number U26097

---

**Type:** DC **Manufacturer:** Wilkins **Model:** 350A
**Size:** 8 **Orientation:** VU **Meters:**
**Manual:** 9 **0.25% Pb:** Yes **Spare Parts Only:** No
**Approved:** 09-Sep-2010 **Renewed:** 09-Sep-2016 **Bypass:**
**Shutoffs:** (ppp),qqq,sss,ttt,yyy,ssss,uuuu,vvvv,xxxx,yyyy,aaaaa,kkkkk,lllll,ggggg,iiiiii,jjjjjj,llllll,mmmmmm,oooooo
**Notes:** Serial number U26097 and higher

**Type:** DC **Manufacturer:** Wilkins **Model:** 350A
**Size:** 10 **Orientation:** H **Meters:**
**Manual:** 9 **0.25% Pb:** No **Spare Parts Only:** No
**Approved:** 06-Apr-2006 **Renewed:** 06-Apr-2018 **Bypass:**
**Shutoffs:** (ppp),qqq,sss,ttt,yyy,ssss,uuuu,vvvv,xxxx,yyyy,aaaaa,kkkkk,lllll,ggggggg,iiiiii,jjjjjj,llllll,mmmmmm,oooooo
**Notes:** Up to serial number U26097

---

**Type:** DC **Manufacturer:** Wilkins **Model:** 350A
**Size:** 10 **Orientation:** H **Meters:**
**Manual:** 9 **0.25% Pb:** Yes **Spare Parts Only:** No
**Approved:** 09-Sep-2010 **Renewed:** 09-Sep-2016 **Bypass:**
**Shutoffs:** (ppp),qqq,sss,ttt,yyy,ssss,uuuu,vvvv,xxxx,yyyy,aaaaa,kkkkk,lllll,ggggggg,iiiiii,jjjjjj,llllll,mmmmmm,oooooo
**Notes:** Serial number U26097 and higher

---

**Type:** DC **Manufacturer:** Wilkins **Model:** 350A
**Size:** 10 **Orientation:** VU **Meters:**
**Manual:** 9 **0.25% Pb:** No **Spare Parts Only:** No
**Approved:** 06-Apr-2006 **Renewed:** 06-Apr-2018 **Bypass:**
**Shutoffs:** (ppp),qqq,sss,ttt,yyy,ssss,uuuu,vvvv,xxxx,yyyy,aaaaa,kkkkk,lllll,ggggggg,iiiiii,jjjjjj,llllll,mmmmmm,oooooo
**Notes:** Up to serial number U26097

---

**Type:** DC **Manufacturer:** Wilkins **Model:** 350A
**Size:** 10 **Orientation:** VU **Meters:**
**Manual:** 9 **0.25% Pb:** Yes **Spare Parts Only:** No
**Approved:** 09-Sep-2010 **Renewed:** 09-Sep-2016 **Bypass:**
**Shutoffs:** (ppp),qqq,sss,ttt,yyy,ssss,uuuu,vvvv,xxxx,yyyy,aaaaa,kkkkk,lllll,ggggggg,iiiiii,jjjjjj,llllll,mmmmmm,oooooo
**Notes:** Serial number U26097 and higher

---

**Type:** DC **Manufacturer:** Wilkins **Model:** 350AR
**Size:** 2 1/2 **Orientation:** H **Meters:**
**Manual:** 9 **0.25% Pb:** No **Spare Parts Only:** No
**Approved:** 16-Jun-2010 **Renewed:** 16-Jun-2016 **Bypass:**
**Shutoffs:**
(ppp),sss,ttt,qqq,yyy,zzz,dddd,ssss,uuuu,vvvv,xxxx,yyyy,aaaaa,kkkkk,lllll,ggggggg,iiiiii,jjjjjj,llllll,mmmmmm,oooooo
**Notes:** Integral grooved spool between the #2 ck and #2 SOV - assembly length: min. 34 1/4" and max. 47 1/8" Up to serial number U26097


2018 © University of Southern California

**Type:** DC | **Manufacturer:** Wilkins | **Model:** 350AR
**Size:** 2 1/2 | **Orientation:** H | **Meters:**
**Manual:** 9 | **0.25% Pb:** Yes | **Spare Parts Only:** No
**Approved:** 09-Sep-2010 | **Renewed:** 09-Sep-2016 | **Bypass:**
**Shutoffs:**
(ppp),sss,ttt,qqq,yyy,zzz,dddd,ssss,uuuu,vvvv,xxxx,yyyy,aaaaa,kkkkk,lllll,gggggg,iiiiii,jjjjjj,llllll,mmmmmm,oooooo
**Notes:** Only Serial No. C00102 and higher approved. These have an Integral grooved spool between the #2 ck and #2 SOV with length: min. 34 1/4" and max. 47 1/8"

---

**Type:** DC | **Manufacturer:** Wilkins | **Model:** 350AR
**Size:** 2 1/2 | **Orientation:** VU | **Meters:**
**Manual:** 9 | **0.25% Pb:** No | **Spare Parts Only:** No
**Approved:** 16-Jun-2010 | **Renewed:** 16-Jun-2016 | **Bypass:**
**Shutoffs:**
(ppp),sss,ttt,qqq,yyy,zzz,dddd,ssss,uuuu,vvvv,xxxx,yyyy,aaaaa,kkkkk,lllll,gggggg,iiiiii,jjjjjj,llllll,mmmmmm,oooooo
**Notes:** Only Serial No. C00102 and higher approved. These have an Integral grooved spool between the #2 ck and #2 SOV with length: min. 34 1/4" and max. 47 1/8"

---

**Type:** DC | **Manufacturer:** Wilkins | **Model:** 350AR
**Size:** 2 1/2 | **Orientation:** VU | **Meters:**
**Manual:** 9 | **0.25% Pb:** Yes | **Spare Parts Only:** No
**Approved:** 09-Sep-2010 | **Renewed:** 09-Sep-2016 | **Bypass:**
**Shutoffs:**
(ppp),sss,ttt,qqq,yyy,zzz,dddd,ssss,uuuu,vvvv,xxxx,yyyy,aaaaa,kkkkk,lllll,gggggg,iiiiii,jjjjjj,llllll,mmmmmm,oooooo
**Notes:** Only Serial No. C00102 and higher approved. These have an Integral grooved spool between the #2 ck and #2 SOV with length: min. 34 1/4" and max. 47 1/8"

---

**Type:** DC | **Manufacturer:** Wilkins | **Model:** 350AR
**Size:** 3 | **Orientation:** H | **Meters:**
**Manual:** 9 | **0.25% Pb:** No | **Spare Parts Only:** No
**Approved:** 16-Jun-2010 | **Renewed:** 16-Jun-2016 | **Bypass:**
**Shutoffs:**
(ppp),sss,ttt,qqq,yyy,zzz,dddd,ssss,uuuu,vvvv,xxxx,yyyy,aaaaa,kkkkk,lllll,gggggg,iiiiii,jjjjjj,llllll,mmmmmm,oooooo
**Notes:** Only Serial No. C00102 and higher approved. These have an Integral grooved spool between the #2 ck and #2 SOV with length: min. 34 3/4" and max. 48 1/8"

**Type:** DC | **Manufacturer:** Wilkins | **Model:** 350AR
**Size:** 3 | **Orientation:** H | **Meters:**
**Manual:** 9 | **0.25% Pb:** Yes | **Spare Parts Only:** No
**Approved:** 09-Sep-2010 | **Renewed:** 09-Sep-2016 | **Bypass:**
**Shutoffs:**
(ppp),sss,ttt,qqq,yyy,zzz,dddd,ssss,uuuu,vvvv,xxxx,yyyy,aaaaa,kkkkk,lllll,gggggg,iiiiii,jjjjjj,llllll,mmmmmm,oooooo
**Notes:** Only Serial No. C00102 and higher approved. These have an Integral grooved spool between the #2 ck and #2 SOV with length: min. 34 3/4" and max. 48 1/8"

---

**Type:** DC | **Manufacturer:** Wilkins | **Model:** 350AR
**Size:** 3 | **Orientation:** VU | **Meters:**
**Manual:** 9 | **0.25% Pb:** No | **Spare Parts Only:** No
**Approved:** 16-Jun-2010 | **Renewed:** 16-Jun-2016 | **Bypass:**
**Shutoffs:**
(ppp),sss,ttt,qqq,yyy,zzz,dddd,ssss,uuuu,vvvv,xxxx,yyyy,aaaaa,kkkkk,lllll,gggggg,iiiiii,jjjjjj,llllll,mmmmmm,oooooo
**Notes:** Only Serial No. C00102 and higher approved. These have an Integral grooved spool between the #2 ck and #2 SOV with length: min. 35 3/4" and max. 62 1/4"

---

**Type:** DC | **Manufacturer:** Wilkins | **Model:** 350AR
**Size:** 3 | **Orientation:** VU | **Meters:**
**Manual:** 9 | **0.25% Pb:** Yes | **Spare Parts Only:** No
**Approved:** 09-Sep-2010 | **Renewed:** 09-Sep-2016 | **Bypass:**
**Shutoffs:**
(ppp),sss,ttt,qqq,yyy,zzz,dddd,ssss,uuuu,vvvv,xxxx,yyyy,aaaaa,kkkkk,lllll,gggggg,iiiiii,jjjjjj,llllll,mmmmmm,oooooo
**Notes:** Only Serial No. C00102 and higher approved. These have an Integral grooved spool between the #2 ck and #2 SOV with length: min. 34 3/4" and max. 48 1/8"

---

**Type:** DC | **Manufacturer:** Wilkins | **Model:** 350AR
**Size:** 4 | **Orientation:** H | **Meters:**
**Manual:** 9 | **0.25% Pb:** No | **Spare Parts Only:** No
**Approved:** 25-Mar-2010 | **Renewed:** 25-Mar-2016 | **Bypass:**
**Shutoffs:**
(ppp),qqq,sss,ttt,www,yyy,zzz,dddd,eeee,ssss,uuuu,vvvv,xxxx,yyyy,aaaaa,kkkkk,lllll,gggggg,iiiiii,jjjjjj,llllll,mmmmmm,ooooo
o
**Notes:** Only Serial No. C00102 and higher approved. These have an Integral grooved spool between the #2 ck and #2 SOV with length: min. 42 1/2" and max. 71 1/4"


2018 © University of Southern California

**Type:** DC **Manufacturer:** Wilkins **Model:** 350AR
**Size:** 4 **Orientation:** H **Meters:**
**Manual:** 9 **0.25% Pb:** Yes **Spare Parts Only:** No
**Approved:** 09-Sep-2010 **Renewed:** 09-Sep-2016 **Bypass:**
**Shutoffs:**
(ppp),qqq,sss,ttt,www,yyy,zzz,dddd,eeee,ssss,uuuu,vvvv,xxxx,yyyy,aaaaa,kkkkk,lllll,gggggg,iiiiii,jjjjjj,llllll,mmmmmm,ooooo
o
**Notes:** Only Serial No. C00102 and higher approved. These have an Integral grooved spool between the #2 ck and #2 SOV with length: min. 35 3/4" and max. 62 1/4"

---

**Type:** DC **Manufacturer:** Wilkins **Model:** 350AR
**Size:** 4 **Orientation:** VU **Meters:**
**Manual:** 9 **0.25% Pb:** No **Spare Parts Only:** No
**Approved:** 25-Mar-2010 **Renewed:** 25-Mar-2016 **Bypass:**
**Shutoffs:**
(ppp),qqq,sss,ttt,www,yyy,zzz,dddd,eeee,ssss,uuuu,vvvv,xxxx,yyyy,aaaaa,kkkkk,lllll,gggggg,iiiiii,jjjjjj,llllll,mmmmmm,ooooo
o
**Notes:** Only Serial No. C00102 and higher approved. These have an Integral grooved spool between the #2 ck and #2 SOV with length: min. 57 7/8" and max. 86"

---

**Type:** DC **Manufacturer:** Wilkins **Model:** 350AR
**Size:** 4 **Orientation:** VU **Meters:**
**Manual:** 9 **0.25% Pb:** Yes **Spare Parts Only:** No
**Approved:** 09-Sep-2010 **Renewed:** 09-Sep-2016 **Bypass:**
**Shutoffs:**
(ppp),qqq,sss,ttt,www,yyy,zzz,dddd,eeee,ssss,uuuu,vvvv,xxxx,yyyy,aaaaa,kkkkk,lllll,gggggg,iiiiii,jjjjjj,llllll,mmmmmm,ooooo
o
**Notes:** Only Serial No. C00102 and higher approved. These have an Integral grooved spool between the #2 ck and #2 SOV with length: min. 35 3/4" and max. 62 1/4"

---

**Type:** DC **Manufacturer:** Wilkins **Model:** 350AR
**Size:** 6 **Orientation:** H **Meters:**
**Manual:** 9 **0.25% Pb:** No **Spare Parts Only:** No
**Approved:** 25-Mar-2010 **Renewed:** 25-Mar-2016 **Bypass:**
**Shutoffs:**
(ppp),qqq,sss,ttt,www,yyy,zzz,dddd,eeee,ssss,uuuu,vvvv,xxxx,yyyy,aaaaa,kkkkk,lllll,gggggg,iiiiii,jjjjjj,llllll,mmmmmm,ooooo
o
**Notes:** Only Serial No. C00102 and higher approved. These have an Integral grooved spool between the #2 ck and #2 SOV with length: min. 61 3/8" and max. 100 5/8"

**Type:** DC **Manufacturer:** Wilkins **Model:** 350AR
**Size:** 6 **Orientation:** H **Meters:**
**Manual:** 9 **0.25% Pb:** Yes **Spare Parts Only:** No
**Approved:** 09-Sep-2010 **Renewed:** 09-Sep-2016 **Bypass:**
**Shutoffs:**
(ppp),qqq,sss,ttt,www,yyy,zzz,dddd,eeee,ssss,uuuu,vvvv,xxxx,yyyy,aaaaa,kkkkk,lllll,gggggg,iiiiii,jjjjjj,llllll,mmmmmm,oooooo
**Notes:** Only Serial No. C00102 and higher approved. These have an Integral grooved spool between the #2 ck and #2 SOV with length: min. 42 1/2" and max. 71 1/4"

---

**Type:** DC **Manufacturer:** Wilkins **Model:** 350AR
**Size:** 6 **Orientation:** VU **Meters:**
**Manual:** 9 **0.25% Pb:** No **Spare Parts Only:** No
**Approved:** 25-Mar-2010 **Renewed:** 25-Mar-2016 **Bypass:**
**Shutoffs:**
(ppp),qqq,sss,ttt,www,yyy,zzz,dddd,eeee,ssss,uuuu,vvvv,xxxx,yyyy,aaaaa,kkkkk,lllll,gggggg,iiiiii,jjjjjj,llllll,mmmmmm,oooooo
**Notes:** Only Serial No. C00102 and higher approved. These have an Integral grooved spool between the #2 ck and #2 SOV with length: min. 34 1/4" and max. 47 1/8"

---

**Type:** DC **Manufacturer:** Wilkins **Model:** 350AR
**Size:** 6 **Orientation:** VU **Meters:**
**Manual:** 9 **0.25% Pb:** Yes **Spare Parts Only:** No
**Approved:** 09-Sep-2010 **Renewed:** 09-Sep-2016 **Bypass:**
**Shutoffs:**
(ppp),qqq,sss,ttt,www,yyy,zzz,dddd,eeee,ssss,uuuu,vvvv,xxxx,yyyy,aaaaa,kkkkk,lllll,gggggg,iiiiii,jjjjjj,llllll,mmmmmm,oooooo
**Notes:** Only Serial No. C00102 and higher approved. These have an Integral grooved spool between the #2 ck and #2 SOV with length: min. 42 1/2" and max. 71 1/4"

---

**Type:** DC **Manufacturer:** Wilkins **Model:** 350AR
**Size:** 8 **Orientation:** H **Meters:**
**Manual:** 9 **0.25% Pb:** No **Spare Parts Only:** No
**Approved:** 25-Mar-2010 **Renewed:** 25-Mar-2016 **Bypass:**
**Shutoffs:**
(ppp),qqq,sss,ttt,www,yyy,zzz,dddd,eeee,ssss,uuuu,vvvv,xxxx,yyyy,aaaaa,kkkkk,lllll,gggggg,iiiiii,jjjjjj,llllll,mmmmmm,oooooo
**Notes:** Only Serial No. C00102 and higher approved. These have an Integral grooved spool between the #2 ck and #2 SOV with length: min. 34 1/4" and max. 47 1/8"


2018 © University of Southern California

**Type:** DC **Manufacturer:** Wilkins **Model:** 350AR
**Size:** 8 **Orientation:** H **Meters:**
**Manual:** 9 **0.25% Pb:** Yes **Spare Parts Only:** No
**Approved:** 09-Sep-2010 **Renewed:** 09-Sep-2016 **Bypass:**
**Shutoffs:**
(ppp),qqq,sss,ttt,www,yyy,zzz,dddd,eeee,ssss,uuuu,vvvv,xxxx,yyyy,aaaaa,kkkkk,lllll,gggggg,iiiiii,jjjjjj,llllll,mmmmmm,ooooo
o
**Notes:** Only Serial No. C00102 and higher approved. These have an Integral grooved spool between the #2 ck and #2 SOV with length: min. 57 7/8" and max. 86"

---

**Type:** DC **Manufacturer:** Wilkins **Model:** 350AR
**Size:** 8 **Orientation:** VU **Meters:**
**Manual:** 9 **0.25% Pb:** No **Spare Parts Only:** No
**Approved:** 25-Mar-2010 **Renewed:** 25-Mar-2016 **Bypass:**
**Shutoffs:**
(ppp),qqq,sss,ttt,www,yyy,zzz,dddd,eeee,ssss,uuuu,vvvv,xxxx,yyyy,aaaaa,kkkkk,lllll,gggggg,iiiiii,jjjjjj,llllll,mmmmmm,ooooo
o
**Notes:** Only Serial No. C00102 and higher approved. These have an Integral grooved spool between the #2 ck and #2 SOV with length: min. 34 1/4" and max. 47 1/8"

---

**Type:** DC **Manufacturer:** Wilkins **Model:** 350AR
**Size:** 8 **Orientation:** VU **Meters:**
**Manual:** 9 **0.25% Pb:** Yes **Spare Parts Only:** No
**Approved:** 09-Sep-2010 **Renewed:** 09-Sep-2016 **Bypass:**
**Shutoffs:**
(ppp),qqq,sss,ttt,www,yyy,zzz,dddd,eeee,ssss,uuuu,vvvv,xxxx,yyyy,aaaaa,kkkkk,lllll,gggggg,iiiiii,jjjjjj,llllll,mmmmmm,ooooo
o
**Notes:** Only Serial No. C00102 and higher approved. These have an Integral grooved spool between the #2 ck and #2 SOV with length: min. 57 7/8" and max. 86"

---

**Type:** DC **Manufacturer:** Wilkins **Model:** 350AR
**Size:** 10 **Orientation:** H **Meters:**
**Manual:** 9 **0.25% Pb:** No **Spare Parts Only:** No
**Approved:** 25-Mar-2010 **Renewed:** 25-Mar-2016 **Bypass:**
**Shutoffs:**
(ppp),qqq,sss,ttt,www,yyy,zzz,dddd,eeee,ssss,uuuu,vvvv,xxxx,yyyy,aaaaa,kkkkk,lllll,gggggg,iiiiii,jjjjjj,llllll,mmmmmm,ooooo
o
**Notes:** Only Serial No. C00102 and higher approved. These have an Integral grooved spool between the #2 ck and #2 SOV with length: min. 34 1/4" and max. 47 1/8"

**Type:** DC **Manufacturer:** Wilkins **Model:** 350AR
**Size:** 10 **Orientation:** H **Meters:**
**Manual:** 9 **0.25% Pb:** Yes **Spare Parts Only:** No
**Approved:** 09-Sep-2010 **Renewed:** 09-Sep-2016 **Bypass:**
**Shutoffs:**
(ppp),qqq,sss,ttt,www,yyy,zzz,dddd,eeee,ssss,uuuu,vvvv,xxxx,yyyy,aaaaa,kkkkk,lllll,gggggg,iiiiii,jjjjjj,llllll,mmmmmm,ooooo
o
**Notes:** Only Serial No. C00102 and higher approved. These have an Integral grooved spool between the #2 ck and #2 SOV with length: min. 61 3/8" and max. 100 5/8"

---

**Type:** DC **Manufacturer:** Wilkins **Model:** 350AR
**Size:** 10 **Orientation:** VU **Meters:**
**Manual:** 9 **0.25% Pb:** No **Spare Parts Only:** No
**Approved:** 25-Mar-2010 **Renewed:** 25-Mar-2016 **Bypass:**
**Shutoffs:**
(ppp),qqq,sss,ttt,www,yyy,zzz,dddd,eeee,ssss,uuuu,vvvv,xxxx,yyyy,aaaaa,kkkkk,lllll,gggggg,iiiiii,jjjjjj,llllll,mmmmmm,ooooo
o
**Notes:** Only Serial No. C00102 and higher approved. These have an Integral grooved spool between the #2 ck and #2 SOV with length: min. 34 1/4" and max. 47 1/8"

---

**Type:** DC **Manufacturer:** Wilkins **Model:** 350AR
**Size:** 10 **Orientation:** VU **Meters:**
**Manual:** 9 **0.25% Pb:** Yes **Spare Parts Only:** No
**Approved:** 09-Sep-2010 **Renewed:** 09-Sep-2016 **Bypass:**
**Shutoffs:**
(ppp),qqq,sss,ttt,www,yyy,zzz,dddd,eeee,ssss,uuuu,vvvv,xxxx,yyyy,aaaaa,kkkkk,lllll,gggggg,iiiiii,jjjjjj,llllll,mmmmmm,ooooo
o
**Notes:** Only Serial No. C00102 and higher approved. These have an Integral grooved spool between the #2 ck and #2 SOV with length: min. 61 3/8" and max. 100 5/8"

---

**Type:** DC **Manufacturer:** Wilkins **Model:** 350ARXL
**Size:** 2 1/2 **Orientation:** H **Meters:**
**Manual:** 9 **0.25% Pb:** Yes **Spare Parts Only:** No
**Approved:** 05-Jun-2010 **Renewed:** 05-Jun-2016 **Bypass:**
**Shutoffs:** (gg),hh,ppp,qqq,ssss,tttt,vvvv,wwww,yyyy,zzzz
**Notes:** Only Serial No. C00102 and higher approved. These have an Integral grooved spool between the #2 ck and #2 SOV with length: min. 34 1/4" and max. 47 1/8"


2018 © University of Southern California

**Type:** DC **Manufacturer:** Wilkins **Model:** 350ARXL
**Size:** 2 1/2 **Orientation:** VU **Meters:**
**Manual:** 9 **0.25% Pb:** Yes **Spare Parts Only:** No
**Approved:** 05-Jun-2010 **Renewed:** 05-Jun-2016 **Bypass:**
**Shutoffs:** (gg),hh,ppp,qqq,ssss,tttt,vvvv,wwww,yyyy,zzzz
**Notes:** Only Serial No. C00102 and higher approved. These have an Integral grooved spool between the #2 ck and #2 SOV with length: min. 34 3/4" and max. 48 1/8"

---

**Type:** DC **Manufacturer:** Wilkins **Model:** 350ARXL
**Size:** 3 **Orientation:** H **Meters:**
**Manual:** 9 **0.25% Pb:** Yes **Spare Parts Only:** No
**Approved:** 05-Jun-2010 **Renewed:** 05-Jun-2016 **Bypass:**
**Shutoffs:** (gg),hh,ppp,qqq,ssss,tttt,vvvv,wwww,yyyy,zzzz
**Notes:** Only Serial No. C00102 and higher approved. These have an Integral grooved spool between the #2 ck and #2 SOV with length: min. 34 3/4" and max. 48 1/8"

---

**Type:** DC **Manufacturer:** Wilkins **Model:** 350ARXL
**Size:** 3 **Orientation:** VU **Meters:**
**Manual:** 9 **0.25% Pb:** Yes **Spare Parts Only:** No
**Approved:** 05-Jun-2010 **Renewed:** 05-Jun-2016 **Bypass:**
**Shutoffs:** (gg),hh,ppp,qqq,vvv,www,ssss,tttt,vvvv,wwww,yyyy,zzzz
**Notes:** Only Serial No. C00102 and higher approved. These have an Integral grooved spool between the #2 ck and #2 SOV with length: min. 35 3/4" and max. 62 1/4"

---

**Type:** DC **Manufacturer:** Wilkins **Model:** 350ARXL
**Size:** 4 **Orientation:** H **Meters:**
**Manual:** 9 **0.25% Pb:** Yes **Spare Parts Only:** No
**Approved:** 05-Jun-2010 **Renewed:** 05-Jun-2016 **Bypass:**
**Shutoffs:** (gg),hh,ppp,qqq,vvv,www,ssss,tttt,vvvv,wwww,yyyy,zzzz
**Notes:** Only Serial No. C00102 and higher approved. These have an Integral grooved spool between the #2 ck and #2 SOV with length: min. 35 3/4" and max. 62 1/4"

---

**Type:** DC **Manufacturer:** Wilkins **Model:** 350ARXL
**Size:** 4 **Orientation:** VU **Meters:**
**Manual:** 9 **0.25% Pb:** Yes **Spare Parts Only:** No
**Approved:** 05-Jun-2010 **Renewed:** 05-Jun-2016 **Bypass:**
**Shutoffs:** (gg),hh,ppp,qqq,vvv,www,ssss,tttt,vvvv,wwww,yyyy,zzzz
**Notes:** Only Serial No. C00102 and higher approved. These have an Integral grooved spool between the #2 ck and #2 SOV with length: min. 42 1/2" and max. 71 1/4"

**Type:** DC **Manufacturer:** Wilkins **Model:** 350ARXL
**Size:** 6 **Orientation:** H **Meters:**
**Manual:** 9 **0.25% Pb:** Yes **Spare Parts Only:** No
**Approved:** 05-Jun-2010 **Renewed:** 05-Jun-2016 **Bypass:**
**Shutoffs:** (gg),hh,ppp,qqq,vvv,www,ssss,tttt,vvvv,wwww,yyyy,zzzz
**Notes:** Only Serial No. C00102 and higher approved. These have an Integral grooved spool between the #2 ck and #2 SOV with length: min. 42 1/2" and max. 71 1/4"

---

**Type:** DC **Manufacturer:** Wilkins **Model:** 350ARXL
**Size:** 6 **Orientation:** VU **Meters:**
**Manual:** 9 **0.25% Pb:** Yes **Spare Parts Only:** No
**Approved:** 05-Jun-2010 **Renewed:** 05-Jun-2016 **Bypass:**
**Shutoffs:** (gg),hh,ppp,qqq,vvv,www,ssss,tttt,vvvv,wwww,yyyy,zzzz
**Notes:** Only Serial No. C00102 and higher approved. These have an Integral grooved spool between the #2 ck and #2 SOV with length: min. 57 7/8" and max. 86"

---

**Type:** DC **Manufacturer:** Wilkins **Model:** 350ARXL
**Size:** 8 **Orientation:** H **Meters:**
**Manual:** 9 **0.25% Pb:** Yes **Spare Parts Only:** No
**Approved:** 05-Jun-2010 **Renewed:** 05-Jun-2016 **Bypass:**
**Shutoffs:** (gg),hh,ppp,qqq,vvv,www,ssss,tttt,vvvv,wwww,yyyy,zzzz
**Notes:** Only Serial No. C00102 and higher approved. These have an Integral grooved spool between the #2 ck and #2 SOV with length: min. 57 7/8" and max. 86"

---

**Type:** DC **Manufacturer:** Wilkins **Model:** 350ARXL
**Size:** 8 **Orientation:** VU **Meters:**
**Manual:** 9 **0.25% Pb:** Yes **Spare Parts Only:** No
**Approved:** 05-Jun-2010 **Renewed:** 05-Jun-2016 **Bypass:**
**Shutoffs:** (gg),hh,ppp,qqq,vvv,www,ssss,tttt,vvvv,wwww,yyyy,zzzz
**Notes:** Only Serial No. C00102 and higher approved. These have an Integral grooved spool between the #2 ck and #2 SOV with length: min. 61 3/8" and max. 100 5/8"

---

**Type:** DC **Manufacturer:** Wilkins **Model:** 350ARXL
**Size:** 10 **Orientation:** H **Meters:**
**Manual:** 9 **0.25% Pb:** Yes **Spare Parts Only:** No
**Approved:** 05-Jun-2010 **Renewed:** 05-Jun-2016 **Bypass:**
**Shutoffs:** (gg),hh,ppp,qqq,vvv,www,ssss,tttt,vvvv,wwww,yyyy,zzzz
**Notes:** Only Serial No. C00102 and higher approved. These have an Integral grooved spool between the #2 ck and #2 SOV with length: min. 61 3/8" and max. 100 5/8"


2018 © University of Southern California

**Type:** DC **Manufacturer:** Wilkins **Model:** 350ARXL
**Size:** 10 **Orientation:** VU **Meters:**
**Manual:** 9 **0.25% Pb:** Yes **Spare Parts Only:** No
**Approved:** 05-Jun-2010 **Renewed:** 05-Jun-2016 **Bypass:**
**Shutoffs:** (hh),ssss,tttt,xxxx,yyyy,zzzz,aaaaa
**Notes:** Integral grooved spool between the #2 ck and #2 SOV - assembly length: min. 61 3/8" and max. 100 5/8"

---

**Type:** DC **Manufacturer:** Wilkins **Model:** 350AST
**Size:** 2 1/2 **Orientation:** H **Meters:**
**Manual:** 10 **0.25% Pb:** Yes **Spare Parts Only:** No
**Approved:** 29-Nov-2011 **Renewed:** 29-Oct-2017 **Bypass:**
**Shutoffs:** (ppp),qqq,yyy,ssss,uuuu,vvvv,xxxx,yyyy,aaaaa,kkkkk,lllll,gggggg,iiiiii,jjjjjj,llllll,mmmmmm,oooooo

---

**Type:** DC **Manufacturer:** Wilkins **Model:** 350AST
**Size:** 2 1/2 **Orientation:** VU **Meters:**
**Manual:** 10 **0.25% Pb:** Yes **Spare Parts Only:** No
**Approved:** 09-Nov-2012 **Renewed:** 09-Nov-2015 **Bypass:**
**Shutoffs:** (ppp),qqq,yyy,ssss,uuuu,vvvv,xxxx,yyyy,aaaaa,kkkkk,lllll,gggggg,iiiiii,jjjjjj,llllll,mmmmmm,oooooo

---

**Type:** DC **Manufacturer:** Wilkins **Model:** 350AST
**Size:** 3 **Orientation:** H **Meters:**
**Manual:** 10 **0.25% Pb:** Yes **Spare Parts Only:** No
**Approved:** 29-Nov-2011 **Renewed:** 29-Oct-2017 **Bypass:**
**Shutoffs:** (ppp),qqq,yyy,ssss,uuuu,vvvv,xxxx,yyyy,aaaaa,kkkkk,lllll,gggggg,iiiiii,jjjjjj,llllll,mmmmmm,oooooo

---

**Type:** DC **Manufacturer:** Wilkins **Model:** 350AST
**Size:** 3 **Orientation:** VU **Meters:**
**Manual:** 10 **0.25% Pb:** Yes **Spare Parts Only:** No
**Approved:** 09-Nov-2012 **Renewed:** 09-Nov-2015 **Bypass:**
**Shutoffs:** (ppp),qqq,yyy,ssss,uuuu,vvvv,xxxx,yyyy,aaaaa,kkkkk,lllll,gggggg,iiiiii,jjjjjj,llllll,mmmmmm,oooooo

---

**Type:** DC **Manufacturer:** Wilkins **Model:** 350AST
**Size:** 4 **Orientation:** H **Meters:**
**Manual:** 10 **0.25% Pb:** Yes **Spare Parts Only:** No
**Approved:** 29-Nov-2011 **Renewed:** 29-Oct-2017 **Bypass:**
**Shutoffs:** (ppp),qqq,yyy,ssss,uuuu,vvvv,xxxx,yyyy,aaaaa,kkkkk,lllll,gggggg,iiiiii,jjjjjj,llllll,mmmmmm,oooooo

**Type:** DC **Manufacturer:** Wilkins **Model:** 350AST
**Size:** 4 **Orientation:** VU **Meters:**
**Manual:** 10 **0.25% Pb:** Yes **Spare Parts Only:** No
**Approved:** 09-Nov-2012 **Renewed:** 09-Nov-2015 **Bypass:**
**Shutoffs:** (ppp),qqq,yyy,ssss,uuuu,vvvv,xxxx,yyyy,aaaaa,kkkkk,lllll,gggggg,iiiiii,jjjjjj,llllll,mmmmmm,oooooo

---

**Type:** DC **Manufacturer:** Wilkins **Model:** 350AST
**Size:** 6 **Orientation:** H **Meters:**
**Manual:** 10 **0.25% Pb:** Yes **Spare Parts Only:** No
**Approved:** 27-Mar-2012 **Renewed:** 27-Mar-2018 **Bypass:**
**Shutoffs:** (yyy),ssss,uuuu,vvvv,xxxx,yyyy,aaaaa,kkkkk,lllll,gggggg,iiiiii,jjjjjj,llllll,mmmmmm,oooooo

---

**Type:** DC **Manufacturer:** Wilkins **Model:** 350AST
**Size:** 6 **Orientation:** VU **Meters:**
**Manual:** 10 **0.25% Pb:** Yes **Spare Parts Only:** No
**Approved:** 24-Oct-2012 **Renewed:** 24-Oct-2018 **Bypass:**
**Shutoffs:** (yyy),ssss,uuuu,vvvv,xxxx,yyyy,aaaaa,kkkkk,lllll,gggggg,iiiiii,jjjjjj,llllll,mmmmmm,oooooo

---

**Type:** DC **Manufacturer:** Wilkins **Model:** 350AST
**Size:** 8 **Orientation:** H **Meters:**
**Manual:** 10 **0.25% Pb:** Yes **Spare Parts Only:** No
**Approved:** 20-Feb-2014 **Renewed:** 20-Feb-2017 **Bypass:**
**Shutoffs:** (yyy),ssss,uuuu,vvvv,xxxx,yyyy,aaaaa,kkkkk,lllll,gggggg,iiiiii,jjjjjj,llllll,mmmmmm,oooooo

---

**Type:** DC **Manufacturer:** Wilkins **Model:** 350AST
**Size:** 8 **Orientation:** VU **Meters:**
**Manual:** 10 **0.25% Pb:** Yes **Spare Parts Only:** No
**Approved:** 20-Feb-2014 **Renewed:** 20-Feb-2017 **Bypass:**
**Shutoffs:** (yyy),ssss,uuuu,vvvv,xxxx,yyyy,aaaaa,kkkkk,lllll,gggggg,iiiiii,jjjjjj,llllll,mmmmmm,oooooo

---

**Type:** DC **Manufacturer:** Wilkins **Model:** 350AST
**Size:** 10 **Orientation:** H **Meters:**
**Manual:** 10 **0.25% Pb:** Yes **Spare Parts Only:** No
**Approved:** 20-Feb-2014 **Renewed:** 20-Feb-2017 **Bypass:**
**Shutoffs:** (yyy),ssss,uuuu,vvvv,xxxx,yyyy,aaaaa,kkkkk,lllll,gggggg,iiiiii,jjjjjj,llllll,mmmmmm,oooooo

---

**Type:** DC **Manufacturer:** Wilkins **Model:** 350AST
**Size:** 10 **Orientation:** VU **Meters:**
**Manual:** 10 **0.25% Pb:** Yes **Spare Parts Only:** No
**Approved:** 20-Feb-2014 **Renewed:** 20-Feb-2017 **Bypass:**
**Shutoffs:** (yyy),ssss,uuuu,vvvv,xxxx,yyyy,aaaaa,kkkkk,lllll,gggggg,iiiiii,jjjjjj,llllll,mmmmmm,oooooo


2018 © University of Southern California

**Type:** DC **Manufacturer:** Wilkins **Model:** 350ASTR
**Size:** 2 1/2 **Orientation:** H **Meters:**
**Manual:** 10 **0.25% Pb:** Yes **Spare Parts Only:** No
**Approved:** 12-Jun-2015 **Renewed:** 12-Jun-2018 **Bypass:**
**Shutoffs:** (ppp),qqq,yyy,ssss,uuuu,vvvv,xxxx,yyyy,aaaaa,kkkkk,lllll,gggggg,iiiiii,jjjjjj,llllll,mmmmmm,oooooo
**Notes:** Integral Stainless Steel grooved spool between the #2 ck and #2 SOV - assembly length: min. 34 1/4" and max. 47 1/8"

---

**Type:** DC **Manufacturer:** Wilkins **Model:** 350ASTR
**Size:** 2 1/2 **Orientation:** VU **Meters:**
**Manual:** 10 **0.25% Pb:** Yes **Spare Parts Only:** No
**Approved:** 12-Jun-2015 **Renewed:** 12-Jun-2018 **Bypass:**
**Shutoffs:** (ppp),qqq,yyy,ssss,uuuu,vvvv,xxxx,yyyy,aaaaa,kkkkk,lllll,gggggg,iiiiii,jjjjjj,llllll,mmmmmm,oooooo
**Notes:** Integral Stainless Steel grooved spool between the #2 ck and #2 SOV - assembly length: min. 34 1/4" and max. 47 1/8"

---

**Type:** DC **Manufacturer:** Wilkins **Model:** 350ASTR
**Size:** 3 **Orientation:** H **Meters:**
**Manual:** 10 **0.25% Pb:** Yes **Spare Parts Only:** No
**Approved:** 12-Jun-2015 **Renewed:** 12-Jun-2018 **Bypass:**
**Shutoffs:** (ppp),qqq,yyy,ssss,uuuu,vvvv,xxxx,yyyy,aaaaa,kkkkk,lllll,gggggg,iiiiii,jjjjjj,llllll,mmmmmm,oooooo
**Notes:** Integral Stainless Steel grooved spool between the #2 ck and #2 SOV - assembly length: min. 34 3/4" and max. 48 1/8"

---

**Type:** DC **Manufacturer:** Wilkins **Model:** 350ASTR
**Size:** 3 **Orientation:** VU **Meters:**
**Manual:** 10 **0.25% Pb:** Yes **Spare Parts Only:** No
**Approved:** 12-Jun-2015 **Renewed:** 12-Jun-2018 **Bypass:**
**Shutoffs:** (ppp),qqq,yyy,ssss,uuuu,vvvv,xxxx,yyyy,aaaaa,kkkkk,lllll,gggggg,iiiiii,jjjjjj,llllll,mmmmmm,oooooo
**Notes:** Integral Stainless Steel grooved spool between the #2 ck and #2 SOV - assembly length: min. 34 3/4" and max. 48 1/8"

---

**Type:** DC **Manufacturer:** Wilkins **Model:** 350ASTR
**Size:** 4 **Orientation:** H **Meters:**
**Manual:** 10 **0.25% Pb:** Yes **Spare Parts Only:** No
**Approved:** 12-Jun-2015 **Renewed:** 12-Jun-2018 **Bypass:**
**Shutoffs:** (ppp),qqq,yyy,ssss,uuuu,vvvv,xxxx,yyyy,aaaaa,kkkkk,lllll,gggggg,iiiiii,jjjjjj,llllll,mmmmmm,oooooo
**Notes:** Integral Stainless Steel grooved spool between the #2 ck and #2 SOV - assembly length: min. 35 3/4" and max. 62 1/4"

**Type:** DC | **Manufacturer:** Wilkins | **Model:** 350ASTR
**Size:** 4 | **Orientation:** VU | **Meters:**
**Manual:** 10 | **0.25% Pb:** Yes | **Spare Parts Only:** No
**Approved:** 12-Jun-2015 | **Renewed:** 12-Jun-2018 | **Bypass:**
**Shutoffs:** (ppp),qqq,yyy,ssss,uuuu,vvvv,xxxx,yyyy,aaaaa,kkkkk,lllll,gggggg,iiiiii,jjjjjj,llllll,mmmmmm,oooooo
**Notes:** Integral Stainless Steel grooved spool between the #2 ck and #2 SOV - assembly length: min. 35 3/4" and max. 62 1/4"

---

**Type:** DC | **Manufacturer:** Wilkins | **Model:** 350ASTR
**Size:** 6 | **Orientation:** H | **Meters:**
**Manual:** 10 | **0.25% Pb:** Yes | **Spare Parts Only:** No
**Approved:** 12-Jun-2015 | **Renewed:** 12-Jun-2018 | **Bypass:**
**Shutoffs:** (yyy),ssss,uuuu,vvvv,xxxx,yyyy,aaaaa,kkkkk,lllll,gggggg,iiiiii,jjjjjj,llllll,mmmmmm,oooooo
**Notes:** Integral Stainless Steel grooved spool between the #2 ck and #2 SOV - assembly length: min. 42 1/2" and max. 71 1/4"

---

**Type:** DC | **Manufacturer:** Wilkins | **Model:** 350ASTR
**Size:** 6 | **Orientation:** VU | **Meters:**
**Manual:** 10 | **0.25% Pb:** Yes | **Spare Parts Only:** No
**Approved:** 12-Jun-2015 | **Renewed:** 12-Jun-2018 | **Bypass:**
**Shutoffs:** (yyy),ssss,uuuu,vvvv,xxxx,yyyy,aaaaa,kkkkk,lllll,gggggg,iiiiii,jjjjjj,llllll,mmmmmm,oooooo
**Notes:** Integral Stainless Steel grooved spool between the #2 ck and #2 SOV - assembly length: min. 42 1/2" and max. 71 1/4"

---

**Type:** DC | **Manufacturer:** Wilkins | **Model:** 350ASTR
**Size:** 8 | **Orientation:** H | **Meters:**
**Manual:** 10 | **0.25% Pb:** Yes | **Spare Parts Only:** No
**Approved:** 25-Feb-2014 | **Renewed:** 25-Feb-2017 | **Bypass:**
**Shutoffs:** (yyy),ssss,uuuu,vvvv,xxxx,yyyy,aaaaa,kkkkk,lllll,gggggg,iiiiii,jjjjjj,llllll,mmmmmm,oooooo
**Notes:** Integral Stainless Steel grooved spool between the #2 ck and #2 SOV - assembly length: min. 48 3/4" and max. 86"

---

**Type:** DC | **Manufacturer:** Wilkins | **Model:** 350ASTR
**Size:** 8 | **Orientation:** VU | **Meters:**
**Manual:** 10 | **0.25% Pb:** Yes | **Spare Parts Only:** No
**Approved:** 25-Feb-2014 | **Renewed:** 25-Feb-2017 | **Bypass:**
**Shutoffs:** (yyy),ssss,uuuu,vvvv,xxxx,yyyy,aaaaa,kkkkk,lllll,gggggg,iiiiii,jjjjjj,llllll,mmmmmm,oooooo
**Notes:** Integral Stainless Steel grooved spool between the #2 ck and #2 SOV - assembly length: min. 48 3/4" and max. 86"


2018 © University of Southern California

**Type:** DC **Manufacturer:** Wilkins **Model:** 350ASTR
**Size:** 10 **Orientation:** H **Meters:**
**Manual:** 10 **0.25% Pb:** Yes **Spare Parts Only:** No
**Approved:** 25-Feb-2014 **Renewed:** 25-Feb-2017 **Bypass:**
**Shutoffs:** (yyy),ssss,uuuu,vvvv,xxxx,yyyy,aaaaa,kkkkk,lllll,gggggg,iiiiii,jjjjjj,llllll,mmmmmm,oooooo
**Notes:** Integral Stainless Steel grooved spool between the #2 ck and #2 SOV - assembly length: min. 52 5/8" and max. 100 5/8"

---

**Type:** DC **Manufacturer:** Wilkins **Model:** 350ASTR
**Size:** 10 **Orientation:** VU **Meters:**
**Manual:** 10 **0.25% Pb:** Yes **Spare Parts Only:** No
**Approved:** 25-Feb-2014 **Renewed:** 25-Feb-2017 **Bypass:**
**Shutoffs:** (yyy),ssss,uuuu,vvvv,xxxx,yyyy,aaaaa,kkkkk,lllll,gggggg,iiiiii,jjjjjj,llllll,mmmmmm,oooooo
**Notes:** Integral Stainless Steel grooved spool between the #2 ck and #2 SOV - assembly length: min. 52 5/8" and max. 100 5/8"

---

**Type:** DC **Manufacturer:** Wilkins **Model:** 350AXL
**Size:** 2 1/2 **Orientation:** H **Meters:**
**Manual:** 9 **0.25% Pb:** No **Spare Parts Only:** No
**Approved:** 14-Apr-2010 **Renewed:** 14-Apr-2016 **Bypass:**
**Shutoffs:** (ppp),qqq,sss,ttt,yyy,ssss,uuuu,vvvv,xxxx,yyyy,aaaaa

---

**Type:** DC **Manufacturer:** Wilkins **Model:** 350AXL
**Size:** 2 1/2 **Orientation:** H **Meters:**
**Manual:** 9 **0.25% Pb:** Yes **Spare Parts Only:** No
**Approved:** 14-Apr-2010 **Renewed:** 14-Apr-2016 **Bypass:**
**Shutoffs:** (ppp),qqq,sss,ttt,yyy,ssss,uuuu,vvvv,xxxx,yyyy,aaaaa

---

**Type:** DC **Manufacturer:** Wilkins **Model:** 350AXL
**Size:** 2 1/2 **Orientation:** VU **Meters:**
**Manual:** 9 **0.25% Pb:** No **Spare Parts Only:** No
**Approved:** 14-Apr-2010 **Renewed:** 14-Apr-2016 **Bypass:**
**Shutoffs:** (ppp),qqq,sss,ttt,yyy,ssss,uuuu,vvvv,xxxx,yyyy,aaaaa

---

**Type:** DC **Manufacturer:** Wilkins **Model:** 350AXL
**Size:** 2 1/2 **Orientation:** VU **Meters:**
**Manual:** 9 **0.25% Pb:** Yes **Spare Parts Only:** No
**Approved:** 14-Apr-2010 **Renewed:** 14-Apr-2016 **Bypass:**
**Shutoffs:** (ppp),qqq,sss,ttt,yyy,ssss,uuuu,vvvv,xxxx,yyyy,aaaaa

**Type:** DC **Manufacturer:** Wilkins **Model:** 350AXL
**Size:** 3 **Orientation:** H **Meters:**
**Manual:** 9 **0.25% Pb:** No **Spare Parts Only:** No
**Approved:** 14-Apr-2010 **Renewed:** 14-Apr-2016 **Bypass:**
**Shutoffs:** (ppp),qqq,sss,ttt,yyy,ssss,uuuu,vvvv,xxxx,yyyy,aaaaa

---

**Type:** DC **Manufacturer:** Wilkins **Model:** 350AXL
**Size:** 3 **Orientation:** H **Meters:**
**Manual:** 9 **0.25% Pb:** Yes **Spare Parts Only:** No
**Approved:** 14-Apr-2010 **Renewed:** 14-Apr-2016 **Bypass:**
**Shutoffs:** (ppp),qqq,sss,ttt,yyy,ssss,uuuu,vvvv,xxxx,yyyy,aaaaa

---

**Type:** DC **Manufacturer:** Wilkins **Model:** 350AXL
**Size:** 3 **Orientation:** VU **Meters:**
**Manual:** 9 **0.25% Pb:** No **Spare Parts Only:** No
**Approved:** 14-Apr-2010 **Renewed:** 14-Apr-2016 **Bypass:**
**Shutoffs:** (ppp),qqq,sss,ttt,yyy,ssss,uuuu,vvvv,xxxx,yyyy,aaaaa

---

**Type:** DC **Manufacturer:** Wilkins **Model:** 350AXL
**Size:** 3 **Orientation:** VU **Meters:**
**Manual:** 9 **0.25% Pb:** Yes **Spare Parts Only:** No
**Approved:** 14-Apr-2010 **Renewed:** 14-Apr-2016 **Bypass:**
**Shutoffs:** (ppp),qqq,sss,ttt,yyy,ssss,uuuu,vvvv,xxxx,yyyy,aaaaa

---

**Type:** DC **Manufacturer:** Wilkins **Model:** 350AXL
**Size:** 4 **Orientation:** H **Meters:**
**Manual:** 9 **0.25% Pb:** No **Spare Parts Only:** No
**Approved:** 14-Apr-2010 **Renewed:** 14-Apr-2016 **Bypass:**
**Shutoffs:** (ppp),qqq,sss,ttt,www,yyy,ssss,uuuu,vvvv,xxxx,yyyy,aaaaa

---

**Type:** DC **Manufacturer:** Wilkins **Model:** 350AXL
**Size:** 4 **Orientation:** H **Meters:**
**Manual:** 9 **0.25% Pb:** Yes **Spare Parts Only:** No
**Approved:** 14-Apr-2010 **Renewed:** 14-Apr-2016 **Bypass:**
**Shutoffs:** (ppp),qqq,sss,ttt,www,yyy,ssss,uuuu,vvvv,xxxx,yyyy,aaaaa

---

**Type:** DC **Manufacturer:** Wilkins **Model:** 350AXL
**Size:** 4 **Orientation:** VU **Meters:**
**Manual:** 9 **0.25% Pb:** No **Spare Parts Only:** No
**Approved:** 14-Apr-2010 **Renewed:** 14-Apr-2016 **Bypass:**
**Shutoffs:** (ppp),qqq,sss,ttt,yyy,ssss,uuuu,vvvv,xxxx,yyyy,aaaaa


2018 © University of Southern California

**Type:** DC **Manufacturer:** Wilkins **Model:** 350AXL
**Size:** 4 **Orientation:** VU **Meters:**
**Manual:** 9 **0.25% Pb:** Yes **Spare Parts Only:** No
**Approved:** 14-Apr-2010 **Renewed:** 14-Apr-2016 **Bypass:**
**Shutoffs:** (ppp),qqq,sss,ttt,yyy,ssss,uuuu,vvvv,xxxx,yyyy,aaaaa

---

**Type:** DC **Manufacturer:** Wilkins **Model:** 350AXL
**Size:** 6 **Orientation:** H **Meters:**
**Manual:** 9 **0.25% Pb:** No **Spare Parts Only:** No
**Approved:** 14-Apr-2010 **Renewed:** 14-Apr-2016 **Bypass:**
**Shutoffs:** (ppp),sss,ttt,qqq,yyy,zzz,dddd,ssss,uuuu,vvvv,xxxx,yyyy,aaaaa

---

**Type:** DC **Manufacturer:** Wilkins **Model:** 350AXL
**Size:** 6 **Orientation:** H **Meters:**
**Manual:** 9 **0.25% Pb:** Yes **Spare Parts Only:** No
**Approved:** 14-Apr-2010 **Renewed:** 14-Apr-2016 **Bypass:**
**Shutoffs:** (ppp),sss,ttt,qqq,yyy,zzz,dddd,ssss,uuuu,vvvv,xxxx,yyyy,aaaaa

---

**Type:** DC **Manufacturer:** Wilkins **Model:** 350AXL
**Size:** 6 **Orientation:** VU **Meters:**
**Manual:** 9 **0.25% Pb:** No **Spare Parts Only:** No
**Approved:** 14-Apr-2010 **Renewed:** 14-Apr-2016 **Bypass:**
**Shutoffs:** (ppp),sss,ttt,qqq,yyy,zzz,dddd,ssss,uuuu,vvvv,xxxx,yyyy,aaaaa

---

**Type:** DC **Manufacturer:** Wilkins **Model:** 350AXL
**Size:** 6 **Orientation:** VU **Meters:**
**Manual:** 9 **0.25% Pb:** Yes **Spare Parts Only:** No
**Approved:** 14-Apr-2010 **Renewed:** 14-Apr-2016 **Bypass:**
**Shutoffs:** (ppp),sss,ttt,qqq,yyy,zzz,dddd,ssss,uuuu,vvvv,xxxx,yyyy,aaaaa

---

**Type:** DC **Manufacturer:** Wilkins **Model:** 350AXL
**Size:** 8 **Orientation:** H **Meters:**
**Manual:** 9 **0.25% Pb:** No **Spare Parts Only:** No
**Approved:** 25-Mar-2010 **Renewed:** 25-Mar-2016 **Bypass:**
**Shutoffs:** (ppp),qqq,sss,ttt,www,yyy,zzz,dddd,eeee,ssss,uuuu,vvvv,xxxx,yyyy,aaaaa

---

**Type:** DC **Manufacturer:** Wilkins **Model:** 350AXL
**Size:** 8 **Orientation:** H **Meters:**
**Manual:** 9 **0.25% Pb:** Yes **Spare Parts Only:** No
**Approved:** 25-Mar-2010 **Renewed:** 25-Mar-2016 **Bypass:**
**Shutoffs:** (ppp),qqq,sss,ttt,www,yyy,zzz,dddd,eeee,ssss,uuuu,vvvv,xxxx,yyyy,aaaaa

**Type:** DC **Manufacturer:** Wilkins **Model:** 350AXL
**Size:** 8 **Orientation:** VU **Meters:**
**Manual:** 9 **0.25% Pb:** No **Spare Parts Only:** No
**Approved:** 25-Mar-2010 **Renewed:** 25-Mar-2016 **Bypass:**
**Shutoffs:** (ppp),qqq,sss,ttt,www,yyy,zzz,dddd,eeee,ssss,uuuu,vvvv,xxxx,yyyy,aaaaa

---

**Type:** DC **Manufacturer:** Wilkins **Model:** 350AXL
**Size:** 8 **Orientation:** VU **Meters:**
**Manual:** 9 **0.25% Pb:** Yes **Spare Parts Only:** No
**Approved:** 25-Mar-2010 **Renewed:** 25-Mar-2016 **Bypass:**
**Shutoffs:** (ppp),qqq,sss,ttt,www,yyy,zzz,dddd,eeee,ssss,uuuu,vvvv,xxxx,yyyy,aaaaa

---

**Type:** DC **Manufacturer:** Wilkins **Model:** 350AXL
**Size:** 10 **Orientation:** H **Meters:**
**Manual:** 9 **0.25% Pb:** Yes **Spare Parts Only:** No
**Approved:** 25-Mar-2010 **Renewed:** 25-Mar-2016 **Bypass:**
**Shutoffs:** (ppp),qqq,sss,ttt,www,yyy,zzz,dddd,eeee,ssss,uuuu,vvvv,xxxx,yyyy,aaaaa

---

**Type:** DC **Manufacturer:** Wilkins **Model:** 350AXL
**Size:** 10 **Orientation:** VU **Meters:**
**Manual:** 9 **0.25% Pb:** Yes **Spare Parts Only:** No
**Approved:** 25-Mar-2010 **Renewed:** 25-Mar-2016 **Bypass:**
**Shutoffs:** (ppp),qqq,sss,ttt,www,yyy,zzz,dddd,eeee,ssss,uuuu,vvvv,xxxx,yyyy,aaaaa

---

**Type:** DC **Manufacturer:** Wilkins **Model:** 350D
**Size:** 3/4 **Orientation:** H **Meters:**
**Manual:** 9 **0.25% Pb:** No **Spare Parts Only:** No
**Approved:** 19-May-2009 **Renewed:** 19-May-2018 **Bypass:**
**Shutoffs:** (ii), ooo

---

**Type:** DC **Manufacturer:** Wilkins **Model:** 350D
**Size:** 3/4 **Orientation:** VU **Meters:**
**Manual:** 9 **0.25% Pb:** No **Spare Parts Only:** No
**Approved:** 22-Jun-2009 **Renewed:** 22-Jun-2018 **Bypass:**
**Shutoffs:** (ii), ooo


2018 © University of Southern California

**Type:** DC
**Manufacturer:** Wilkins
**Model:** 350XL
**Size:** 3/4
**Orientation:** H
**Meters:**
**Manual:** 9
**0.25% Pb:** Yes
**Spare Parts Only:** No
**Approved:** 30-Aug-2006
**Renewed:** 30-Aug-2018
**Bypass:**
**Shutoffs:** (iiii)
**Notes:** Testcocks: Female Threaded End or 45 degree male SAE flare

---

**Type:** DC
**Manufacturer:** Wilkins
**Model:** 350XL
**Size:** 3/4
**Orientation:** VU
**Meters:**
**Manual:** 9
**0.25% Pb:** Yes
**Spare Parts Only:** No
**Approved:** 30-Aug-2006
**Renewed:** 30-Aug-2018
**Bypass:**
**Shutoffs:** (iiii)
**Notes:** Testcocks: Female Threaded End or 45 degree male SAE flare

---

**Type:** DC
**Manufacturer:** Wilkins
**Model:** 350XL
**Size:** 1
**Orientation:** H
**Meters:**
**Manual:** 9
**0.25% Pb:** Yes
**Spare Parts Only:** No
**Approved:** 27-Oct-2006
**Renewed:** 27-Oct-2015
**Bypass:**
**Shutoffs:** (iiii)
**Notes:** Testcocks: Female Threaded End or 45 degree male SAE flare

---

**Type:** DC
**Manufacturer:** Wilkins
**Model:** 350XL
**Size:** 1
**Orientation:** VU
**Meters:**
**Manual:** 9
**0.25% Pb:** Yes
**Spare Parts Only:** No
**Approved:** 27-Oct-2006
**Renewed:** 27-Oct-2015
**Bypass:**
**Shutoffs:** (iiii)
**Notes:** Testcocks: Female Threaded End or 45 degree male SAE flare

---

**Type:** DC
**Manufacturer:** Wilkins
**Model:** 350XL
**Size:** 1 1/4
**Orientation:** H
**Meters:**
**Manual:** 9
**0.25% Pb:** Yes
**Spare Parts Only:** No
**Approved:** 08-Jan-2009
**Renewed:** 08-Jan-2018
**Bypass:**
**Shutoffs:** (int)

---

**Type:** DC
**Manufacturer:** Wilkins
**Model:** 350XL
**Size:** 1 1/4
**Orientation:** VU
**Meters:**
**Manual:** 9
**0.25% Pb:** Yes
**Spare Parts Only:** No
**Approved:** 08-Jan-2009
**Renewed:** 08-Jan-2018
**Bypass:**
**Shutoffs:** (int)

**Type:** DC
**Manufacturer:** Wilkins
**Model:** 350XL
**Size:** 1 1/2
**Orientation:** H
**Meters:**
**Manual:** 9
**0.25% Pb:** Yes
**Spare Parts Only:** No
**Approved:** 08-Jan-2009
**Renewed:** 08-Jan-2018
**Bypass:**
**Shutoffs:** (int)

---

**Type:** DC
**Manufacturer:** Wilkins
**Model:** 350XL
**Size:** 1 1/2
**Orientation:** VU
**Meters:**
**Manual:** 9
**0.25% Pb:** Yes
**Spare Parts Only:** No
**Approved:** 08-Jan-2009
**Renewed:** 08-Jan-2018
**Bypass:**
**Shutoffs:** (int)

---

**Type:** DC
**Manufacturer:** Wilkins
**Model:** 350XL
**Size:** 2
**Orientation:** H
**Meters:**
**Manual:** 9
**0.25% Pb:** Yes
**Spare Parts Only:** No
**Approved:** 08-Jan-2009
**Renewed:** 08-Jan-2018
**Bypass:**
**Shutoffs:** (int)

---

**Type:** DC
**Manufacturer:** Wilkins
**Model:** 350XL
**Size:** 2
**Orientation:** VU
**Meters:**
**Manual:** 9
**0.25% Pb:** Yes
**Spare Parts Only:** No
**Approved:** 08-Jan-2009
**Renewed:** 08-Jan-2018
**Bypass:**
**Shutoffs:** (int)

---

**Type:** DC
**Manufacturer:** Wilkins
**Model:** 350XL
**Size:** 2 1/2
**Orientation:** H
**Meters:**
**Manual:** 9
**0.25% Pb:** No
**Spare Parts Only:** No
**Approved:** 14-Apr-2010
**Renewed:** 14-Apr-2016
**Bypass:**
**Shutoffs:** ee,ff,ll,mm,tt,uu,yy,zz,zzz,dddd

---

**Type:** DC
**Manufacturer:** Wilkins
**Model:** 350XL
**Size:** 2 1/2
**Orientation:** H
**Meters:**
**Manual:** 9
**0.25% Pb:** Yes
**Spare Parts Only:** No
**Approved:** 14-Apr-2010
**Renewed:** 14-Apr-2016
**Bypass:**
**Shutoffs:** (gg),hh,ppp,qqq,ssss,tttt,vvvv,wwww,yyyy,zzzz

---

**Type:** DC
**Manufacturer:** Wilkins
**Model:** 350XL
**Size:** 2 1/2
**Orientation:** VU
**Meters:**
**Manual:** 9
**0.25% Pb:** No
**Spare Parts Only:** No
**Approved:** 14-Apr-2010
**Renewed:** 14-Apr-2016
**Bypass:**
**Shutoffs:** ee,ff,ll,mm,tt,uu,yy,zz,zzz,dddd


2018 © University of Southern California

**Type:** DC **Manufacturer:** Wilkins **Model:** 350XL
**Size:** 2 1/2 **Orientation:** VU **Meters:**
**Manual:** 9 **0.25% Pb:** Yes **Spare Parts Only:** No
**Approved:** 14-Apr-2010 **Renewed:** 14-Apr-2016 **Bypass:**
**Shutoffs:** (gg),hh,ppp,qqq,ssss,tttt,vvvv,wwww,yyyy,zzzz

---

**Type:** DC **Manufacturer:** Wilkins **Model:** 350XL
**Size:** 3 **Orientation:** H **Meters:**
**Manual:** 9 **0.25% Pb:** No **Spare Parts Only:** No
**Approved:** 14-Apr-2010 **Renewed:** 14-Apr-2016 **Bypass:**
**Shutoffs:** ee,ff,ll,mm,tt,uu,yy,zz,zzz,dddd

---

**Type:** DC **Manufacturer:** Wilkins **Model:** 350XL
**Size:** 3 **Orientation:** H **Meters:**
**Manual:** 9 **0.25% Pb:** Yes **Spare Parts Only:** No
**Approved:** 14-Apr-2010 **Renewed:** 14-Apr-2016 **Bypass:**
**Shutoffs:** (gg),hh,ppp,qqq,ssss,tttt,vvvv,wwww,yyyy,zzzz

---

**Type:** DC **Manufacturer:** Wilkins **Model:** 350XL
**Size:** 3 **Orientation:** VU **Meters:**
**Manual:** 9 **0.25% Pb:** No **Spare Parts Only:** No
**Approved:** 14-Apr-2010 **Renewed:** 14-Apr-2016 **Bypass:**
**Shutoffs:** ee,ff,ll,mm,tt,uu,yy,zz,zzz,dddd

---

**Type:** DC **Manufacturer:** Wilkins **Model:** 350XL
**Size:** 3 **Orientation:** VU **Meters:**
**Manual:** 9 **0.25% Pb:** Yes **Spare Parts Only:** No
**Approved:** 14-Apr-2010 **Renewed:** 14-Apr-2016 **Bypass:**
**Shutoffs:** (gg),hh,ppp,qqq,ssss,tttt,vvvv,wwww,yyyy,zzzz

---

**Type:** DC **Manufacturer:** Wilkins **Model:** 350XL
**Size:** 4 **Orientation:** H **Meters:**
**Manual:** 9 **0.25% Pb:** No **Spare Parts Only:** No
**Approved:** 14-Apr-2010 **Renewed:** 14-Apr-2016 **Bypass:**
**Shutoffs:** ee,ff,ll,mm,tt,uu,yy,zz,zzz,dddd,eeee

---

**Type:** DC **Manufacturer:** Wilkins **Model:** 350XL
**Size:** 4 **Orientation:** H **Meters:**
**Manual:** 9 **0.25% Pb:** Yes **Spare Parts Only:** No
**Approved:** 14-Apr-2010 **Renewed:** 14-Apr-2016 **Bypass:**
**Shutoffs:** (gg),hh,ppp,qqq,vvv,www,ssss,tttt,vvvv,wwww,yyyy,zzzz

**Type:** DC **Manufacturer:** Wilkins **Model:** 350XL
**Size:** 4 **Orientation:** VU **Meters:**
**Manual:** 9 **0.25% Pb:** No **Spare Parts Only:** No
**Approved:** 14-Apr-2010 **Renewed:** 14-Apr-2016 **Bypass:**
**Shutoffs:** ee,ff,ll,mm,tt,uu,yy,zz,zzz,dddd,eeee

---

**Type:** DC **Manufacturer:** Wilkins **Model:** 350XL
**Size:** 4 **Orientation:** VU **Meters:**
**Manual:** 9 **0.25% Pb:** Yes **Spare Parts Only:** No
**Approved:** 14-Apr-2010 **Renewed:** 14-Apr-2016 **Bypass:**
**Shutoffs:** (gg),hh,ppp,qqq,vvv,www,ssss,tttt,vvvv,wwww,yyyy,zzzz

---

**Type:** DC **Manufacturer:** Wilkins **Model:** 350XL
**Size:** 6 **Orientation:** H **Meters:**
**Manual:** 9 **0.25% Pb:** No **Spare Parts Only:** No
**Approved:** 14-Apr-2010 **Renewed:** 14-Apr-2016 **Bypass:**
**Shutoffs:** ee,ff,ll,mm,tt,uu,yy,zz,zzz,dddd,eeee

---

**Type:** DC **Manufacturer:** Wilkins **Model:** 350XL
**Size:** 6 **Orientation:** H **Meters:**
**Manual:** 9 **0.25% Pb:** Yes **Spare Parts Only:** No
**Approved:** 14-Apr-2010 **Renewed:** 14-Apr-2016 **Bypass:**
**Shutoffs:** (gg),hh,ppp,qqq,vvv,www,ssss,tttt,vvvv,wwww,yyyy,zzzz

---

**Type:** DC **Manufacturer:** Wilkins **Model:** 350XL
**Size:** 6 **Orientation:** VU **Meters:**
**Manual:** 9 **0.25% Pb:** No **Spare Parts Only:** No
**Approved:** 14-Apr-2010 **Renewed:** 14-Apr-2016 **Bypass:**
**Shutoffs:** ee,ff,ll,mm,tt,uu,yy,zz,zzz,dddd,eeee

---

**Type:** DC **Manufacturer:** Wilkins **Model:** 350XL
**Size:** 6 **Orientation:** VU **Meters:**
**Manual:** 9 **0.25% Pb:** Yes **Spare Parts Only:** No
**Approved:** 14-Apr-2010 **Renewed:** 14-Apr-2016 **Bypass:**
**Shutoffs:** (gg),hh,ppp,qqq,vvv,www,ssss,tttt,vvvv,wwww,yyyy,zzzz

---

**Type:** DC **Manufacturer:** Wilkins **Model:** 350XL
**Size:** 8 **Orientation:** H **Meters:**
**Manual:** 9 **0.25% Pb:** No **Spare Parts Only:** No
**Approved:** 25-Mar-2010 **Renewed:** 25-Mar-2016 **Bypass:**
**Shutoffs:** ee,ff,ll,mm,tt,uu,yy,zz,zzz,dddd,eeee


2018 © University of Southern California

**Type:** DC **Manufacturer:** Wilkins **Model:** 350XL
**Size:** 8 **Orientation:** H **Meters:**
**Manual:** 9 **0.25% Pb:** Yes **Spare Parts Only:** No
**Approved:** 25-Mar-2010 **Renewed:** 25-Mar-2016 **Bypass:**
**Shutoffs:** (gg),hh,ppp,qqq,vvv,www,ssss,tttt,vvvv,wwww,yyyy,zzzz

---

**Type:** DC **Manufacturer:** Wilkins **Model:** 350XL
**Size:** 8 **Orientation:** VU **Meters:**
**Manual:** 9 **0.25% Pb:** No **Spare Parts Only:** No
**Approved:** 25-Mar-2010 **Renewed:** 25-Mar-2016 **Bypass:**
**Shutoffs:** ee,ff,ll,mm,tt,uu,yy,zz,zzz,dddd,eeee

---

**Type:** DC **Manufacturer:** Wilkins **Model:** 350XL
**Size:** 8 **Orientation:** VU **Meters:**
**Manual:** 9 **0.25% Pb:** Yes **Spare Parts Only:** No
**Approved:** 25-Mar-2010 **Renewed:** 25-Mar-2016 **Bypass:**
**Shutoffs:** (gg),hh,ppp,qqq,vvv,www,ssss,tttt,vvvv,wwww,yyyy,zzzz

---

**Type:** DC **Manufacturer:** Wilkins **Model:** 350XL
**Size:** 10 **Orientation:** H **Meters:**
**Manual:** 9 **0.25% Pb:** No **Spare Parts Only:** No
**Approved:** 25-Mar-2010 **Renewed:** 25-Mar-2016 **Bypass:**
**Shutoffs:** ee,ff,ll,mm,tt,uu,yy,zz,zzz,dddd,eeee

---

**Type:** DC **Manufacturer:** Wilkins **Model:** 350XL
**Size:** 10 **Orientation:** H **Meters:**
**Manual:** 9 **0.25% Pb:** Yes **Spare Parts Only:** No
**Approved:** 25-Mar-2010 **Renewed:** 25-Mar-2016 **Bypass:**
**Shutoffs:** (ppp),qqq,sss,ttt,yyy,ssss,uuuu,vvvv,xxxx,yyyy,aaaaa

---

**Type:** DC **Manufacturer:** Wilkins **Model:** 350XL
**Size:** 10 **Orientation:** VU **Meters:**
**Manual:** 9 **0.25% Pb:** No **Spare Parts Only:** No
**Approved:** 25-Mar-2010 **Renewed:** 25-Mar-2016 **Bypass:**
**Shutoffs:** ee,ff,ll,mm,tt,uu,yy,zz,zzz,dddd,eeee

---

**Type:** DC **Manufacturer:** Wilkins **Model:** 350XL
**Size:** 10 **Orientation:** VU **Meters:**
**Manual:** 9 **0.25% Pb:** Yes **Spare Parts Only:** No
**Approved:** 25-Mar-2010 **Renewed:** 25-Mar-2016 **Bypass:**
**Shutoffs:** (ppp),qqq,sss,ttt,yyy,ssss,uuuu,vvvv,xxxx,yyyy,aaaaa

**Type:** DC **Manufacturer:** Wilkins **Model:** 350XL
**Size:** 12 **Orientation:** H **Meters:**
**Manual:** 9 **0.25% Pb:** Yes **Spare Parts Only:** No
**Approved:** 25-Mar-2010 **Renewed:** 25-Mar-2016 **Bypass:**
**Shutoffs:** (hh),ssss,tttt,uuuu,vvvv,wwww,xxxx,yyyy,zzzz,aaaaa

---

**Type:** DC **Manufacturer:** Wilkins **Model:** 450
**Size:** 2 1/2 **Orientation:** VUVD **Meters:**
**Manual:** 9 **0.25% Pb:** No **Spare Parts Only:** No
**Approved:** 24-Jan-2002 **Renewed:** 24-Jan-2017 **Bypass:**
**Shutoffs:**
(gg),ee,ff,hh,ll,mm,tt,uu,yy,zz,ppp,qqq,zzz,dddd,ssss,tttt,vvvv,wwww,yyyy,zzzz,kkkkk,gggggg,hhhhhh,jjjjjj,kkkkkk,mmmmmm,nnnnnn
**Notes:** Up to serial number K01185

---

**Type:** DC **Manufacturer:** Wilkins **Model:** 450
**Size:** 2 1/2 **Orientation:** VUVD **Meters:**
**Manual:** 9 **0.25% Pb:** Yes **Spare Parts Only:** No
**Approved:** 09-Sep-2010 **Renewed:** 09-Sep-2016 **Bypass:**
**Shutoffs:** (gg),hh,ppp,qqq,ssss,tttt,vvvv,wwww,yyyy,zzzz,kkkkk,gggggg,hhhhhh,jjjjjj,kkkkkk,mmmmmm,nnnnnn
**Notes:** Serial number K01185 and higher

---

**Type:** DC **Manufacturer:** Wilkins **Model:** 450
**Size:** 3 **Orientation:** VUVD **Meters:**
**Manual:** 9 **0.25% Pb:** No **Spare Parts Only:** No
**Approved:** 24-Jan-2002 **Renewed:** 24-Jan-2017 **Bypass:**
**Shutoffs:**
(gg),ee,ff,hh,ll,mm,tt,uu,yy,zz,ppp,qqq,zzz,dddd,ssss,tttt,vvvv,wwww,yyyy,zzzz,kkkkk,gggggg,hhhhhh,jjjjjj,kkkkkk,mmmmmm,nnnnnn
**Notes:** Up to serial number K01185

---

**Type:** DC **Manufacturer:** Wilkins **Model:** 450
**Size:** 3 **Orientation:** VUVD **Meters:**
**Manual:** 9 **0.25% Pb:** Yes **Spare Parts Only:** No
**Approved:** 09-Sep-2010 **Renewed:** 09-Sep-2016 **Bypass:**
**Shutoffs:** (gg),hh,ppp,qqq,ssss,tttt,vvvv,wwww,yyyy,zzzz,kkkkk,gggggg,hhhhhh,jjjjjj,kkkkkk,mmmmmm,nnnnnn
**Notes:** Serial number K01185 and higher


2018 © University of Southern California

**Type:** DC **Manufacturer:** Wilkins **Model:** 450
**Size:** 4 **Orientation:** VUVD **Meters:**
**Manual:** 9 **0.25% Pb:** No **Spare Parts Only:** No
**Approved:** 12-Apr-2000 **Renewed:** 12-Apr-2018 **Bypass:**
**Shutoffs:**
(ppp),qqq,sss,ttt,www,yyy,zzz,dddd,eeee,ssss,uuuu,vvvv,xxxx,yyyy,aaaaa,kkkkk,lllll,gggggg,iiiiii,jjjjjj,llllll,mmmmmm,oooooo
**Notes:** Up to serial number K01185

---

**Type:** DC **Manufacturer:** Wilkins **Model:** 450
**Size:** 4 **Orientation:** VUVD **Meters:**
**Manual:** 9 **0.25% Pb:** Yes **Spare Parts Only:** No
**Approved:** 09-Sep-2010 **Renewed:** 09-Sep-2016 **Bypass:**
**Shutoffs:** (ppp),qqq,sss,ttt,www,yyy,ssss,uuuu,vvvv,xxxx,yyyy,aaaaa,kkkkk,lllll,gggggg,iiiiii,jjjjjj,llllll,mmmmmm,oooooo
**Notes:** Serial number K01185 and higher

---

**Type:** DC **Manufacturer:** Wilkins **Model:** 450
**Size:** 6 **Orientation:** VUVD **Meters:**
**Manual:** 9 **0.25% Pb:** No **Spare Parts Only:** No
**Approved:** 24-May-2000 **Renewed:** 24-May-2018 **Bypass:**
**Shutoffs:**
(ppp),qqq,sss,ttt,www,yyy,zzz,dddd,eeee,ssss,uuuu,vvvv,xxxx,yyyy,aaaaa,kkkkk,lllll,gggggg,iiiiii,jjjjjj,llllll,mmmmmm,oooooo
**Notes:** Up to serial number K01185

---

**Type:** DC **Manufacturer:** Wilkins **Model:** 450
**Size:** 6 **Orientation:** VUVD **Meters:**
**Manual:** 9 **0.25% Pb:** Yes **Spare Parts Only:** No
**Approved:** 09-Sep-2010 **Renewed:** 09-Sep-2016 **Bypass:**
**Shutoffs:** (ppp),qqq,sss,ttt,www,yyy,ssss,uuuu,vvvv,xxxx,yyyy,aaaaa,kkkkk,lllll,gggggg,iiiiii,jjjjjj,llllll,mmmmmm,oooooo
**Notes:** Serial number K01185 and higher

---

**Type:** DC **Manufacturer:** Wilkins **Model:** 450
**Size:** 8 **Orientation:** VUVD **Meters:**
**Manual:** 9 **0.25% Pb:** No **Spare Parts Only:** No
**Approved:** 14-Apr-2003 **Renewed:** 14-Apr-2018 **Bypass:**
**Shutoffs:**
(ppp),qqq,sss,ttt,www,yyy,zzz,dddd,eeee,ssss,uuuu,vvvv,xxxx,yyyy,aaaaa,kkkkk,lllll,gggggg,iiiiii,jjjjjj,llllll,mmmmmm,oooooo
**Notes:** Up to serial number K01185

**Type:** DC **Manufacturer:** Wilkins **Model:** 450
**Size:** 8 **Orientation:** VUVD **Meters:**
**Manual:** 9 **0.25% Pb:** Yes **Spare Parts Only:** No
**Approved:** 09-Sep-2010 **Renewed:** 09-Sep-2016 **Bypass:**
**Shutoffs:** (ppp),qqq,sss,ttt,www,yyy,ssss,uuuu,vvvv,xxxx,yyyy,aaaaa,kkkkk,lllll,gggggg,iiiiii,jjjjjj,llllll,mmmmmm,oooooo
**Notes:** Serial number K01185 and higher

---

**Type:** DC **Manufacturer:** Wilkins **Model:** 450
**Size:** 10 **Orientation:** VUVD **Meters:**
**Manual:** 9 **0.25% Pb:** No **Spare Parts Only:** No
**Approved:** 11-Sep-2003 **Renewed:** 11-Sep-2018 **Bypass:**
**Shutoffs:**
(ppp),qqq,sss,ttt,www,zzz,dddd,eeee,ssss,uuuu,vvvv,xxxx,yyyy,aaaaa,kkkkk,lllll,gggggg,iiiiii,jjjjjj,llllll,mmmmmm,oooooo
**Notes:** Up to serial number K01185

---

**Type:** DC **Manufacturer:** Wilkins **Model:** 450
**Size:** 10 **Orientation:** VUVD **Meters:**
**Manual:** 9 **0.25% Pb:** Yes **Spare Parts Only:** No
**Approved:** 09-Sep-2010 **Renewed:** 09-Sep-2016 **Bypass:**
**Shutoffs:** (ppp),qqq,sss,ttt,www,ssss,uuuu,vvvv,xxxx,yyyy,aaaaa,kkkkk,lllll,gggggg,iiiiii,jjjjjj,llllll,mmmmmm,oooooo
**Notes:** Serial number K01185 and higher

---

**Type:** DC **Manufacturer:** Wilkins **Model:** 450ST
**Size:** 4 **Orientation:** VUVD **Meters:**
**Manual:** 10 **0.25% Pb:** Yes **Spare Parts Only:** No
**Approved:** 13-Jun-2018 **Renewed:** **Bypass:**
**Shutoffs:** (kkkkk),yyy,ssss,uuuu,vvvv,xxxx,yyyy,aaaaa,lllll,gggggg,iiiiii,jjjjjj,llllll,mmmmmm,oooooo

---

**Type:** DC **Manufacturer:** Wilkins **Model:** 450ST
**Size:** 6 **Orientation:** VUVD **Meters:**
**Manual:** 10 **0.25% Pb:** Yes **Spare Parts Only:** No
**Approved:** 13-Jun-2018 **Renewed:** **Bypass:**
**Shutoffs:** (kkkkk),yyy,ssss,uuuu,vvvv,xxxx,yyyy,aaaaa,lllll,gggggg,iiiiii,jjjjjj,llllll,mmmmmm,oooooo

---

**Type:** DC **Manufacturer:** Wilkins **Model:** 450STR
**Size:** 4 **Orientation:** VUVD **Meters:**
**Manual:** 10 **0.25% Pb:** Yes **Spare Parts Only:** No
**Approved:** 13-Jun-2018 **Renewed:** **Bypass:**
**Shutoffs:** (kkkkk),yyy,ssss,uuuu,vvvv,xxxx,yyyy,aaaaa,lllll,gggggg,iiiiii,jjjjjj,llllll,mmmmmm,oooooo


2018 © University of Southern California

**Type:** DC **Manufacturer:** Wilkins **Model:** 450STR
**Size:** 6 **Orientation:** VUVD **Meters:**
**Manual:** 10 **0.25% Pb:** Yes **Spare Parts Only:** No
**Approved:** 13-Jun-2018 **Renewed:** **Bypass:**
**Shutoffs:** (kkkkk),yyy,ssss,uuuu,vvvv,xxxx,yyyy,aaaaa,lllll,gggggg,iiiiii,jjjjjj,llllll,mmmmmm,oooooo

---

**Type:** DC **Manufacturer:** Wilkins **Model:** 450XL
**Size:** 2 1/2 **Orientation:** VUVD **Meters:**
**Manual:** 9 **0.25% Pb:** No **Spare Parts Only:** No
**Approved:** 14-Apr-2010 **Renewed:** 14-Apr-2016 **Bypass:**
**Shutoffs:** (gg),hh,ppp,qqq,ssss,tttt,vvvv,wwww,yyyy,zzzz

---

**Type:** DC **Manufacturer:** Wilkins **Model:** 450XL
**Size:** 2 1/2 **Orientation:** VUVD **Meters:**
**Manual:** 9 **0.25% Pb:** Yes **Spare Parts Only:** No
**Approved:** 14-Apr-2010 **Renewed:** 14-Apr-2016 **Bypass:**
**Shutoffs:** (gg),hh,ppp,qqq,ssss,tttt,vvvv,wwww,yyyy,zzzz

---

**Type:** DC **Manufacturer:** Wilkins **Model:** 450XL
**Size:** 3 **Orientation:** VUVD **Meters:**
**Manual:** 9 **0.25% Pb:** No **Spare Parts Only:** No
**Approved:** 14-Apr-2010 **Renewed:** 14-Apr-2016 **Bypass:**
**Shutoffs:** (gg),hh,ppp,qqq,ssss,tttt,vvvv,wwww,yyyy,zzzz

---

**Type:** DC **Manufacturer:** Wilkins **Model:** 450XL
**Size:** 3 **Orientation:** VUVD **Meters:**
**Manual:** 9 **0.25% Pb:** Yes **Spare Parts Only:** No
**Approved:** 14-Apr-2010 **Renewed:** 14-Apr-2016 **Bypass:**
**Shutoffs:** (gg),hh,ppp,qqq,vvv,www,ssss,tttt,vvvv,wwww,yyyy,zzzz

---

**Type:** DC **Manufacturer:** Wilkins **Model:** 450XL
**Size:** 4 **Orientation:** VUVD **Meters:**
**Manual:** 9 **0.25% Pb:** No **Spare Parts Only:** No
**Approved:** 14-Apr-2010 **Renewed:** 14-Apr-2016 **Bypass:**
**Shutoffs:** (gg),hh,ppp,qqq,vvv,www,ssss,tttt,vvvv,wwww,yyyy,zzzz

---

**Type:** DC **Manufacturer:** Wilkins **Model:** 450XL
**Size:** 4 **Orientation:** VUVD **Meters:**
**Manual:** 9 **0.25% Pb:** Yes **Spare Parts Only:** No
**Approved:** 14-Apr-2010 **Renewed:** 14-Apr-2016 **Bypass:**
**Shutoffs:** (gg),hh,ppp,qqq,vvv,www,ssss,tttt,vvvv,wwww,yyyy,zzzz

**Type:** DC **Manufacturer:** Wilkins **Model:** 450XL
**Size:** 6 **Orientation:** VUVD **Meters:**
**Manual:** 9 **0.25% Pb:** No **Spare Parts Only:** No
**Approved:** 14-Apr-2010 **Renewed:** 14-Apr-2016 **Bypass:**
**Shutoffs:** (gg),hh,ppp,qqq,vvv,www,ssss,tttt,vvvv,wwww,yyyy,zzzz

---

**Type:** DC **Manufacturer:** Wilkins **Model:** 450XL
**Size:** 6 **Orientation:** VUVD **Meters:**
**Manual:** 9 **0.25% Pb:** Yes **Spare Parts Only:** No
**Approved:** 14-Apr-2010 **Renewed:** 14-Apr-2016 **Bypass:**
**Shutoffs:** (gg),hh,ppp,qqq,vvv,www,ssss,tttt,vvvv,wwww,yyyy,zzzz

---

**Type:** DC **Manufacturer:** Wilkins **Model:** 450XL
**Size:** 8 **Orientation:** VUVD **Meters:**
**Manual:** 9 **0.25% Pb:** No **Spare Parts Only:** No
**Approved:** 25-Mar-2010 **Renewed:** 25-Mar-2016 **Bypass:**
**Shutoffs:** (gg),hh,ppp,qqq,vvv,www,ssss,tttt,vvvv,wwww,yyyy,zzzz

---

**Type:** DC **Manufacturer:** Wilkins **Model:** 450XL
**Size:** 8 **Orientation:** VUVD **Meters:**
**Manual:** 9 **0.25% Pb:** Yes **Spare Parts Only:** No
**Approved:** 25-Mar-2010 **Renewed:** 25-Mar-2016 **Bypass:**
**Shutoffs:** (gg),hh,ppp,qqq,vvv,www,ssss,tttt,vvvv,wwww,yyyy,zzzz

---

**Type:** DC **Manufacturer:** Wilkins **Model:** 450XL
**Size:** 10 **Orientation:** VUVD **Meters:**
**Manual:** 9 **0.25% Pb:** No **Spare Parts Only:** No
**Approved:** 25-Mar-2010 **Renewed:** 25-Mar-2016 **Bypass:**
**Shutoffs:** (gg),hh,ppp,qqq,vvv,www,ssss,tttt,vvvv,wwww,yyyy,zzzz

---

**Type:** DC **Manufacturer:** Wilkins **Model:** 450XL
**Size:** 10 **Orientation:** VUVD **Meters:**
**Manual:** 9 **0.25% Pb:** Yes **Spare Parts Only:** No
**Approved:** 25-Mar-2010 **Renewed:** 25-Mar-2016 **Bypass:**
**Shutoffs:** (hh),ssss,tttt,xxxx,yyyy,zzzz,aaaaa

---

**Type:** DC **Manufacturer:** Wilkins **Model:** 550
**Size:** 3/4 **Orientation:** H **Meters:**
**Manual:** 5 **0.25% Pb:** No **Spare Parts Only:** Yes
**Approved:** 11-Oct-1976 **Renewed:** 11-Oct-2018 **Bypass:**
**Shutoffs:** (ppp),qqq,sss,ttt,yyy,ssss,uuuu,vvvv,xxxx,yyyy,aaaaa


2018 © University of Southern California

**Type:** DC **Manufacturer:** Wilkins **Model:** 550
**Size:** 1 **Orientation:** H **Meters:**
**Manual:** 5 **0.25% Pb:** No **Spare Parts Only:** Yes
**Approved:** 11-Oct-1976 **Renewed:** 11-Oct-2018 **Bypass:**
**Shutoffs:** (ppp),qqq,sss,ttt,yyy,ssss,uuuu,vvvv,xxxx,yyyy,aaaaa

---

**Type:** DC **Manufacturer:** Wilkins **Model:** 550
**Size:** 1 1/4 **Orientation:** H **Meters:**
**Manual:** 5 **0.25% Pb:** No **Spare Parts Only:** Yes
**Approved:** 11-Oct-1976 **Renewed:** 11-Oct-2018 **Bypass:**
**Shutoffs:** (ppp),qqq,sss,ttt,yyy,ssss,uuuu,vvvv,xxxx,yyyy,aaaaa

---

**Type:** DC **Manufacturer:** Wilkins **Model:** 550
**Size:** 1 1/2 **Orientation:** H **Meters:**
**Manual:** 5 **0.25% Pb:** No **Spare Parts Only:** Yes
**Approved:** 11-Oct-1976 **Renewed:** 11-Oct-2018 **Bypass:**
**Shutoffs:** (ppp),qqq,sss,ttt,yyy,ssss,uuuu,vvvv,xxxx,yyyy,aaaaa

---

**Type:** DC **Manufacturer:** Wilkins **Model:** 550
**Size:** 1 1/2 **Orientation:** H **Meters:**
**Manual:** 5 **0.25% Pb:** No **Spare Parts Only:** Yes
**Approved:** 11-Oct-1976 **Renewed:** 11-Oct-2018 **Bypass:**
**Shutoffs:** (ppp),qqq,sss,ttt,yyy,ssss,uuuu,vvvv,xxxx,yyyy,aaaaa

---

**Type:** DC **Manufacturer:** Wilkins **Model:** 550
**Size:** 2 **Orientation:** H **Meters:**
**Manual:** 5 **0.25% Pb:** No **Spare Parts Only:** Yes
**Approved:** 11-Oct-1976 **Renewed:** 11-Oct-2018 **Bypass:**
**Shutoffs:** (ppp),qqq,sss,ttt,yyy,ssss,uuuu,vvvv,xxxx,yyyy,aaaaa

---

**Type:** DC **Manufacturer:** Wilkins **Model:** 550
**Size:** 2 1/2 **Orientation:** H **Meters:**
**Manual:** 7 **0.25% Pb:** No **Spare Parts Only:** Yes
**Approved:** 25-Sep-1986 **Renewed:** 25-Sep-2016 **Bypass:**
**Shutoffs:** (ppp),qqq,sss,ttt,yyy,ssss,uuuu,vvvv,xxxx,yyyy,aaaaa

---

**Type:** DC **Manufacturer:** Wilkins **Model:** 550
**Size:** 3 **Orientation:** H **Meters:**
**Manual:** 5 **0.25% Pb:** No **Spare Parts Only:** Yes
**Approved:** 20-Aug-1979 **Renewed:** 20-Aug-2018 **Bypass:**
**Shutoffs:** (ppp),qqq,sss,ttt,yyy,ssss,uuuu,vvvv,xxxx,yyyy,aaaaa

**Type:** DC **Manufacturer:** Wilkins **Model:** 550
**Size:** 4 **Orientation:** H **Meters:**
**Manual:** 5 **0.25% Pb:** No **Spare Parts Only:** Yes
**Approved:** 20-Jun-1980 **Renewed:** 20-Jun-2016 **Bypass:**
**Shutoffs:** (ppp),qqq,sss,ttt,www,yyy,ssss,uuuu,vvvv,xxxx,yyyy,aaaaa

---

**Type:** DC **Manufacturer:** Wilkins **Model:** 550
**Size:** 6 **Orientation:** H **Meters:**
**Manual:** 6 **0.25% Pb:** No **Spare Parts Only:** Yes
**Approved:** 06-Jul-1981 **Renewed:** 06-Jul-2017 **Bypass:**
**Shutoffs:** (ppp),qqq,sss,ttt,www,yyy,ssss,uuuu,vvvv,xxxx,yyyy,aaaaa

---

**Type:** DC **Manufacturer:** Wilkins **Model:** 550A
**Size:** 3/4 **Orientation:** H **Meters:**
**Manual:** 7 **0.25% Pb:** No **Spare Parts Only:** Yes
**Approved:** 17-Apr-1987 **Renewed:** 17-Apr-2017 **Bypass:**
**Shutoffs:** (ppp),qqq,sss,ttt,yyy,ssss,uuuu,vvvv,xxxx,yyyy,aaaaa

---

**Type:** DC **Manufacturer:** Wilkins **Model:** 550A
**Size:** 1 **Orientation:** H **Meters:**
**Manual:** 7 **0.25% Pb:** No **Spare Parts Only:** Yes
**Approved:** 17-Apr-1987 **Renewed:** 17-Apr-2017 **Bypass:**
**Shutoffs:** (ppp),qqq,sss,ttt,yyy,ssss,uuuu,vvvv,xxxx,yyyy,aaaaa

---

**Type:** DC **Manufacturer:** Wilkins **Model:** 550M
**Size:** 8 **Orientation:** H **Meters:**
**Manual:** 8 **0.25% Pb:** No **Spare Parts Only:** Yes
**Approved:** 15-Mar-1989 **Renewed:** 15-Mar-2016 **Bypass:**
**Shutoffs:** (ppp),sss,ttt,qqq,yyy,zzz,dddd,ssss,uuuu,vvvv,xxxx,yyyy,aaaaa
**Notes:** 4"x4"x8" Manifold Formerly MBD

---

**Type:** DC **Manufacturer:** Wilkins **Model:** 550M
**Size:** 10 **Orientation:** H **Meters:**
**Manual:** 6 **0.25% Pb:** No **Spare Parts Only:** Yes
**Approved:** 11-Apr-1983 **Renewed:** 11-Apr-2016 **Bypass:**
**Shutoffs:** (ppp),sss,ttt,qqq,yyy,zzz,dddd,ssss,uuuu,vvvv,xxxx,yyyy,aaaaa
**Notes:** 6"x6"x10" Manifold Formerly MBD


2018 © University of Southern California

**Type:** DC **Manufacturer:** Wilkins **Model:** 950
**Size:** 3/4 **Orientation:** H **Meters:**
**Manual:** 8 **0.25% Pb:** No **Spare Parts Only:** Yes
**Approved:** 18-Jul-1991 **Renewed:** 18-Jul-2018 **Bypass:**
**Shutoffs:** (ppp),sss,ttt,qqq,yyy,zzz,dddd,ssss,uuuu,vvvv,xxxx,yyyy,aaaaa

---

**Type:** DC **Manufacturer:** Wilkins **Model:** 950
**Size:** 1 **Orientation:** H **Meters:**
**Manual:** 8 **0.25% Pb:** No **Spare Parts Only:** Yes
**Approved:** 18-Jul-1991 **Renewed:** 18-Jul-2018 **Bypass:**
**Shutoffs:** (ppp),sss,ttt,qqq,yyy,zzz,dddd,ssss,uuuu,vvvv,xxxx,yyyy,aaaaa

---

**Type:** DC **Manufacturer:** Wilkins **Model:** 950
**Size:** 1 1/4 **Orientation:** H **Meters:**
**Manual:** 8 **0.25% Pb:** No **Spare Parts Only:** Yes
**Approved:** 05-Apr-1991 **Renewed:** 05-Apr-2018 **Bypass:**
**Shutoffs:** (ppp),qqq,sss,ttt,www,yyy,zzz,dddd,eeee,ssss,uuuu,vvvv,xxxx,yyyy,aaaaa

---

**Type:** DC **Manufacturer:** Wilkins **Model:** 950
**Size:** 1 1/2 **Orientation:** H **Meters:**
**Manual:** 8 **0.25% Pb:** No **Spare Parts Only:** Yes
**Approved:** 05-Apr-1991 **Renewed:** 05-Apr-2018 **Bypass:**
**Shutoffs:** (ppp),qqq,sss,ttt,www,yyy,zzz,dddd,eeee,ssss,uuuu,vvvv,xxxx,yyyy,aaaaa

---

**Type:** DC **Manufacturer:** Wilkins **Model:** 950
**Size:** 2 **Orientation:** H **Meters:**
**Manual:** 8 **0.25% Pb:** No **Spare Parts Only:** Yes
**Approved:** 05-Apr-1991 **Renewed:** 05-Apr-2018 **Bypass:**
**Shutoffs:** (ppp),qqq,sss,ttt,www,yyy,zzz,dddd,eeee,ssss,uuuu,vvvv,xxxx,yyyy,aaaaa

---

**Type:** DC **Manufacturer:** Wilkins **Model:** 950
**Size:** 2 1/2 **Orientation:** H **Meters:**
**Manual:** 8 **0.25% Pb:** No **Spare Parts Only:** Yes
**Approved:** 26-Nov-1991 **Renewed:** 26-Nov-2015 **Bypass:**
**Shutoffs:** (ppp),qqq,sss,ttt,www,yyy,zzz,dddd,eeee,ssss,uuuu,vvvv,xxxx,yyyy,aaaaa

---

**Type:** DC **Manufacturer:** Wilkins **Model:** 950
**Size:** 3 **Orientation:** H **Meters:**
**Manual:** 8 **0.25% Pb:** No **Spare Parts Only:** Yes
**Approved:** 08-Nov-1991 **Renewed:** 08-Nov-2015 **Bypass:**
**Shutoffs:** (ppp),qqq,sss,ttt,www,yyy,zzz,dddd,eeee,ssss,uuuu,vvvv,xxxx,yyyy,aaaaa

**Type:** DC **Manufacturer:** Wilkins **Model:** 950
**Size:** 4 **Orientation:** H **Meters:**
**Manual:** 8 **0.25% Pb:** No **Spare Parts Only:** Yes
**Approved:** 08-Nov-1991 **Renewed:** 08-Nov-2015 **Bypass:**
**Shutoffs:** (ppp),qqq,sss,ttt,www,yyy,zzz,dddd,eeee,ssss,uuuu,vvvv,xxxx,yyyy,aaaaa

---

**Type:** DC **Manufacturer:** Wilkins **Model:** 950
**Size:** 4 **Orientation:** VU **Meters:**
**Manual:** 8 **0.25% Pb:** No **Spare Parts Only:** Yes
**Approved:** 29-Aug-1995 **Renewed:** 29-Aug-2016 **Bypass:**
**Shutoffs:** (ppp),qqq,sss,ttt,www,yyy,zzz,dddd,eeee,ssss,uuuu,vvvv,xxxx,yyyy,aaaaa

---

**Type:** DC **Manufacturer:** Wilkins **Model:** 950
**Size:** 6 **Orientation:** H **Meters:**
**Manual:** 8 **0.25% Pb:** No **Spare Parts Only:** Yes
**Approved:** 18-Mar-1992 **Renewed:** 18-Mar-2016 **Bypass:**
**Shutoffs:** (ppp),qqq,sss,ttt,www,yyy,zzz,dddd,eeee,ssss,uuuu,vvvv,xxxx,yyyy,aaaaa

---

**Type:** DC **Manufacturer:** Wilkins **Model:** 950
**Size:** 6 **Orientation:** VU **Meters:**
**Manual:** 8 **0.25% Pb:** No **Spare Parts Only:** Yes
**Approved:** 29-Aug-1995 **Renewed:** 29-Aug-2016 **Bypass:**
**Shutoffs:** (gg),hh,ppp,qqq,ssss,uuuu,vvvv,xxxx,yyyy,aaaaa

---

**Type:** DC **Manufacturer:** Wilkins **Model:** 950
**Size:** 8 **Orientation:** H **Meters:**
**Manual:** 8 **0.25% Pb:** No **Spare Parts Only:** Yes
**Approved:** 18-Mar-1989 **Renewed:** 18-Mar-2016 **Bypass:**
**Shutoffs:** (gg),hh,ppp,qqq,ssss,uuuu,vvvv,xxxx,yyyy,aaaaa

---

**Type:** DC **Manufacturer:** Wilkins **Model:** 950
**Size:** 8 **Orientation:** VU **Meters:**
**Manual:** 8 **0.25% Pb:** No **Spare Parts Only:** Yes
**Approved:** 29-Aug-1995 **Renewed:** 29-Aug-2016 **Bypass:**
**Shutoffs:** (ppp),qqq,sss,ttt,www,yyy,ssss,uuuu,vvvv,xxxx,yyyy,aaaaa

---

**Type:** DC **Manufacturer:** Wilkins **Model:** 950
**Size:** 10 **Orientation:** H **Meters:**
**Manual:** 8 **0.25% Pb:** No **Spare Parts Only:** Yes
**Approved:** 12-Apr-1994 **Renewed:** 12-Apr-2018 **Bypass:**
**Shutoffs:** (ppp),qqq,sss,ttt,www,yyy,ssss,uuuu,vvvv,xxxx,yyyy,aaaaa


2018 © University of Southern California

**Type:** DC
**Manufacturer:** Wilkins
**Model:** 950A
**Size:** 3/4
**Orientation:** H
**Meters:**
**Manual:** 8
**0.25% Pb:** No
**Spare Parts Only:** Yes
**Approved:** 18-Jul-1991
**Renewed:** 18-Jul-2018
**Bypass:**
**Shutoffs:** (ppp),qqq,sss,ttt,www,yyy,ssss,uuuu,vvvv,xxxx,yyyy,aaaaa

---

**Type:** DC
**Manufacturer:** Wilkins
**Model:** 950A
**Size:** 1
**Orientation:** H
**Meters:**
**Manual:** 8
**0.25% Pb:** No
**Spare Parts Only:** Yes
**Approved:** 18-Jul-1991
**Renewed:** 18-Jul-2018
**Bypass:**
**Shutoffs:** (ppp),qqq,sss,ttt,www,yyy,ssss,uuuu,vvvv,xxxx,yyyy,aaaaa

---

**Type:** DC
**Manufacturer:** Wilkins
**Model:** 950A
**Size:** 1 1/4
**Orientation:** H
**Meters:**
**Manual:** 8
**0.25% Pb:** No
**Spare Parts Only:** Yes
**Approved:** 18-Jul-1991
**Renewed:** 18-Jul-2018
**Bypass:**
**Shutoffs:** ii

---

**Type:** DC
**Manufacturer:** Wilkins
**Model:** 950A
**Size:** 1 1/2
**Orientation:** H
**Meters:**
**Manual:** 8
**0.25% Pb:** No
**Spare Parts Only:** Yes
**Approved:** 18-Jul-1991
**Renewed:** 18-Jul-2018
**Bypass:**
**Shutoffs:** ii

---

**Type:** DC
**Manufacturer:** Wilkins
**Model:** 950A
**Size:** 2
**Orientation:** H
**Meters:**
**Manual:** 8
**0.25% Pb:** No
**Spare Parts Only:** Yes
**Approved:** 18-Jul-1991
**Renewed:** 18-Jul-2018
**Bypass:**
**Shutoffs:** ii

---

**Type:** DC
**Manufacturer:** Wilkins
**Model:** 950XL
**Size:** 3/4
**Orientation:** H
**Meters:**
**Manual:** 8
**0.25% Pb:** No
**Spare Parts Only:** No
**Approved:** 02-Nov-1992
**Renewed:** 02-Nov-2016
**Bypass:**
**Shutoffs:** (ii),ooo
**Notes:** Testcocks: Female Threaded End or 45 degree male SAE flare

**Type:** DC
**Manufacturer:** Wilkins
**Model:** 950XL
**Size:** 3/4
**Orientation:** VU
**Meters:**
**Manual:** 8
**0.25% Pb:** No
**Spare Parts Only:** No
**Approved:** 12-Dec-1996
**Renewed:** 12-Dec-2017
**Bypass:**
**Shutoffs:** (ii),ooo
**Notes:** Testcocks: Female Threaded End or 45 degree male SAE flare

---

**Type:** DC
**Manufacturer:** Wilkins
**Model:** 950XL
**Size:** 1
**Orientation:** H
**Meters:**
**Manual:** 8
**0.25% Pb:** No
**Spare Parts Only:** No
**Approved:** 02-Nov-1992
**Renewed:** 02-Nov-2016
**Bypass:**
**Shutoffs:** (ii),ooo
**Notes:** Testcocks: Female Threaded End or 45 degree male SAE flare

---

**Type:** DC
**Manufacturer:** Wilkins
**Model:** 950XL
**Size:** 1 1/4
**Orientation:** H
**Meters:**
**Manual:** 8
**0.25% Pb:** No
**Spare Parts Only:** No
**Approved:** 02-Nov-1992
**Renewed:** 02-Nov-2016
**Bypass:**
**Shutoffs:** (ii),ooo,ggg

---

**Type:** DC
**Manufacturer:** Wilkins
**Model:** 950XL
**Size:** 1 1/2
**Orientation:** H
**Meters:**
**Manual:** 8
**0.25% Pb:** No
**Spare Parts Only:** No
**Approved:** 02-Nov-1992
**Renewed:** 02-Nov-2016
**Bypass:**
**Shutoffs:** (ii),ooo

---

**Type:** DC
**Manufacturer:** Wilkins
**Model:** 950XL
**Size:** 2
**Orientation:** H
**Meters:**
**Manual:** 8
**0.25% Pb:** No
**Spare Parts Only:** No
**Approved:** 02-Nov-1992
**Renewed:** 02-Nov-2016
**Bypass:**
**Shutoffs:** (ii),bbb,ooo

---

**Type:** DC
**Manufacturer:** Wilkins
**Model:** 950XLD
**Size:** 3/4
**Orientation:** H
**Meters:**
**Manual:** 9
**0.25% Pb:** No
**Spare Parts Only:** No
**Approved:** 15-Sep-1999
**Renewed:** 15-Sep-2017
**Bypass:**
**Shutoffs:** (ii),ooo
**Notes:** Up to Serial # 3863324 Testcocks: Female Threaded End or 45 degree male SAE flare


2018 © University of Southern California

**Type:** DC **Manufacturer:** Wilkins **Model:** 950XLD
**Size:** 3/4 **Orientation:** H **Meters:**
**Manual:** 9 **0.25% Pb:** Yes **Spare Parts Only:** No
**Approved:** 15-Sep-1999 **Renewed:** 15-Sep-2017 **Bypass:**
**Shutoffs:** (ii),ooo
**Notes:** Starting at Serial # 3863325 Testcocks: Female Threaded End or 45 degree male SAE flare

---

**Type:** DC **Manufacturer:** Wilkins **Model:** 950XLD
**Size:** 3/4 **Orientation:** H **Meters:**
**Manual:** 10 **0.25% Pb:** No **Spare Parts Only:** No
**Approved:** 03-Jul-2013 **Renewed:** 03-Jul-2016 **Bypass:**
**Shutoffs:** (iiii)
**Notes:** Up to Serial # 3863324 Testcocks: Female Threaded End or 45 degree male SAE flare

---

**Type:** DC **Manufacturer:** Wilkins **Model:** 950XLD
**Size:** 3/4 **Orientation:** H **Meters:**
**Manual:** 10 **0.25% Pb:** Yes **Spare Parts Only:** No
**Approved:** 03-Jul-2013 **Renewed:** 03-Jul-2016 **Bypass:**
**Shutoffs:** (iiii)
**Notes:** Starting at Serial # 3863325 Testcocks: Female Threaded End or 45 degree male SAE flare

---

**Type:** DC **Manufacturer:** Wilkins **Model:** 950XLD
**Size:** 3/4 **Orientation:** VU **Meters:**
**Manual:** 9 **0.25% Pb:** No **Spare Parts Only:** No
**Approved:** 05-Jan-2000 **Renewed:** 05-Jan-2017 **Bypass:**
**Shutoffs:** (ii),ooo
**Notes:** Up to Serial # 3863324 Testcocks: Female Threaded End or 45 degree male SAE flare

---

**Type:** DC **Manufacturer:** Wilkins **Model:** 950XLD
**Size:** 3/4 **Orientation:** VU **Meters:**
**Manual:** 9 **0.25% Pb:** Yes **Spare Parts Only:** No
**Approved:** 05-Jan-2000 **Renewed:** 05-Jan-2017 **Bypass:**
**Shutoffs:** (ii),ooo
**Notes:** Starting at Serial # 3863325 Testcocks: Female Threaded End or 45 degree male SAE flare

---

**Type:** DC **Manufacturer:** Wilkins **Model:** 950XLD
**Size:** 3/4 **Orientation:** VU **Meters:**
**Manual:** 10 **0.25% Pb:** No **Spare Parts Only:** No
**Approved:** 03-Jul-2013 **Renewed:** 03-Jul-2016 **Bypass:**
**Shutoffs:** (iiii)
**Notes:** Up to Serial # 3863324 Testcocks: Female Threaded End or 45 degree male SAE flare

**Type:** DC
**Manufacturer:** Wilkins
**Model:** 950XLD
**Size:** 3/4
**Orientation:** VU
**Meters:**
**Manual:** 10
**0.25% Pb:** Yes
**Spare Parts Only:** No
**Approved:** 03-Jul-2013
**Renewed:** 03-Jul-2016
**Bypass:**
**Shutoffs:** (iiii)
**Notes:** Starting at Serial # 3863325 Testcocks: Female Threaded End or 45 degree male SAE flare

---

**Type:** DC
**Manufacturer:** Wilkins
**Model:** 950XLT
**Size:** 3/4
**Orientation:** H
**Meters:**
**Manual:** 9
**0.25% Pb:** No
**Spare Parts Only:** No
**Approved:** 09-May-1997
**Renewed:** 09-May-2018
**Bypass:**
**Shutoffs:** (ii),ooo
**Notes:** Testcocks: Female Threaded End or 45 degree male SAE flare

---

**Type:** DC
**Manufacturer:** Wilkins
**Model:** 950XLT
**Size:** 1
**Orientation:** H
**Meters:**
**Manual:** 9
**0.25% Pb:** No
**Spare Parts Only:** No
**Approved:** 09-May-1997
**Renewed:** 09-May-2018
**Bypass:**
**Shutoffs:** (ii),ooo
**Notes:** Testcocks: Female Threaded End or 45 degree male SAE flare

---

**Type:** DC
**Manufacturer:** Wilkins
**Model:** 950XLT
**Size:** 1 1/4
**Orientation:** H
**Meters:**
**Manual:** 9
**0.25% Pb:** No
**Spare Parts Only:** No
**Approved:** 19-Jun-1998
**Renewed:** 19-Jun-2016
**Bypass:**
**Shutoffs:** (ii),ooo

---

**Type:** DC
**Manufacturer:** Wilkins
**Model:** 950XLT
**Size:** 1 1/2
**Orientation:** H
**Meters:**
**Manual:** 9
**0.25% Pb:** No
**Spare Parts Only:** No
**Approved:** 09-Apr-1998
**Renewed:** 09-Apr-2016
**Bypass:**
**Shutoffs:** (ii),ooo

---

**Type:** DC
**Manufacturer:** Wilkins
**Model:** 950XLT
**Size:** 2
**Orientation:** H
**Meters:**
**Manual:** 9
**0.25% Pb:** No
**Spare Parts Only:** No
**Approved:** 09-Apr-1998
**Renewed:** 09-Apr-2016
**Bypass:**
**Shutoffs:** (ii),ooo,bbbbb,ccccc,pppppp


2018 © University of Southern California

**Type:** DC
**Manufacturer:** Wilkins
**Model:** 950XLT2
**Size:** 3/4
**Orientation:** H
**Meters:**
**Manual:** 9
**0.25% Pb:** Yes
**Spare Parts Only:** No
**Approved:** 21-Aug-2009
**Renewed:** 21-Aug-2018
**Bypass:**
**Shutoffs:** (iiii)
**Notes:** Testcocks: Female Threaded End or 45 degree male SAE flare

---

**Type:** DC
**Manufacturer:** Wilkins
**Model:** 950XLT2
**Size:** 1
**Orientation:** H
**Meters:**
**Manual:** 9
**0.25% Pb:** Yes
**Spare Parts Only:** No
**Approved:** 21-Aug-2009
**Renewed:** 21-Aug-2018
**Bypass:**
**Shutoffs:** (iiii)
**Notes:** Testcocks: Female Threaded End or 45 degree male SAE flare

---

**Type:** DC
**Manufacturer:** Wilkins
**Model:** 950XLT2
**Size:** 1 1/4
**Orientation:** H
**Meters:**
**Manual:** 9
**0.25% Pb:** Yes
**Spare Parts Only:** No
**Approved:** 21-Aug-2009
**Renewed:** 21-Aug-2018
**Bypass:**
**Shutoffs:** (iiii)

---

**Type:** DC
**Manufacturer:** Wilkins
**Model:** 950XLT2
**Size:** 1 1/2
**Orientation:** H
**Meters:**
**Manual:** 9
**0.25% Pb:** Yes
**Spare Parts Only:** No
**Approved:** 21-Aug-2009
**Renewed:** 21-Aug-2018
**Bypass:**
**Shutoffs:** (iiii)

---

**Type:** DC
**Manufacturer:** Wilkins
**Model:** 950XLT2
**Size:** 2
**Orientation:** H
**Meters:**
**Manual:** 9
**0.25% Pb:** Yes
**Spare Parts Only:** No
**Approved:** 21-Aug-2009
**Renewed:** 21-Aug-2018
**Bypass:**
**Shutoffs:** (iiii),pppppp

---

**Type:** DC
**Manufacturer:** Wilkins
**Model:** 950XLT2U
**Size:** 3/4
**Orientation:** H
**Meters:**
**Manual:** 9
**0.25% Pb:** Yes
**Spare Parts Only:** No
**Approved:** 22-Feb-2011
**Renewed:** 22-Feb-2017
**Bypass:**
**Shutoffs:** (mmmmm)
**Notes:** Testcocks: Female Threaded End or 45 degree male SAE flare

**Type:** DC
**Manufacturer:** Wilkins
**Model:** 950XLTBF
**Size:** 2
**Orientation:** H
**Meters:**
**Manual:** 9
**0.25% Pb:** No
**Spare Parts Only:** No
**Approved:** 22-Feb-2011
**Renewed:** 22-Feb-2017
**Bypass:**
**Shutoffs:** (bbbbb),pppppp

---

**Type:** DC
**Manufacturer:** Wilkins
**Model:** 950XLTBFSS
**Size:** 2
**Orientation:** H
**Meters:**
**Manual:** 9
**0.25% Pb:** No
**Spare Parts Only:** No
**Approved:** 22-Feb-2011
**Renewed:** 22-Feb-2017
**Bypass:**
**Shutoffs:** (ccccc),pppppp

---

**Type:** DC
**Manufacturer:** Wilkins
**Model:** 950XLTU
**Size:** 3/4
**Orientation:** H
**Meters:**
**Manual:** 9
**0.25% Pb:** No
**Spare Parts Only:** No
**Approved:** 14-Aug-2006
**Renewed:** 14-Aug-2018
**Bypass:**
**Shutoffs:** (ggg),xxx

---

**Type:** DC
**Manufacturer:** Wilkins
**Model:** 950XLTU
**Size:** 1
**Orientation:** H
**Meters:**
**Manual:** 9
**0.25% Pb:** No
**Spare Parts Only:** No
**Approved:** 14-Aug-2006
**Renewed:** 14-Aug-2018
**Bypass:**
**Shutoffs:** (ggg),xxx

---

**Type:** DC
**Manufacturer:** Wilkins
**Model:** 950XLU
**Size:** 3/4
**Orientation:** H
**Meters:**
**Manual:** 8
**0.25% Pb:** No
**Spare Parts Only:** No
**Approved:** 15-Feb-1994
**Renewed:** 15-Feb-2018
**Bypass:**
**Shutoffs:** (ggg),xxx
**Notes:** Testcocks: Female Threaded End or 45 degree male SAE flare

---

**Type:** DC
**Manufacturer:** Wilkins
**Model:** 950XLU
**Size:** 1
**Orientation:** H
**Meters:**
**Manual:** 8
**0.25% Pb:** No
**Spare Parts Only:** No
**Approved:** 15-Feb-1994
**Renewed:** 15-Feb-2018
**Bypass:**
**Shutoffs:** (ggg),xxx
**Notes:** Testcocks: Female Threaded End or 45 degree male SAE flare


2018 © University of Southern California

**Type:** DC
**Manufacturer:** Wilkins
**Model:** 950XLU
**Size:** 1 1/2
**Orientation:** H
**Meters:**
**Manual:** 8
**0.25% Pb:** No
**Spare Parts Only:** No
**Approved:** 15-Feb-1994
**Renewed:** 15-Feb-2018
**Bypass:**
**Shutoffs:** (ggg),xxx

---

**Type:** DC
**Manufacturer:** Wilkins
**Model:** 950XLU
**Size:** 2
**Orientation:** H
**Meters:**
**Manual:** 8
**0.25% Pb:** No
**Spare Parts Only:** No
**Approved:** 15-Feb-1994
**Renewed:** 15-Feb-2018
**Bypass:**
**Shutoffs:** (ggg),xxx

---

**Type:** DC
**Manufacturer:** Wilkins
**Model:** MBD
**Size:** 8
**Orientation:**
**Meters:**
**Manual:**
**0.25% Pb:** No
**Spare Parts Only:** No
**Approved:**
**Renewed:**
**Bypass:**
**Notes:** 4"x4"x8" Manifold, Model designation changed to 550M

---

**Type:** DC
**Manufacturer:** Wilkins
**Model:** MBD
**Size:** 10
**Orientation:**
**Meters:**
**Manual:**
**0.25% Pb:** No
**Spare Parts Only:** No
**Approved:**
**Renewed:**
**Bypass:**
**Notes:** 6"x6"x10" Manifold, Model designation changed to 550M

---

**Type:** DCDA
**Manufacturer:** Ames
**Model:** 3000-1SS
**Size:** 12
**Orientation:** H
**Meters:** (N), H,I,J,K,L,M,O,P,Q
**Manual:** 9
**0.25% Pb:** No
**Spare Parts Only:** No
**Approved:** 04-Dec-2009
**Renewed:** 04-Dec-2015
**Bypass:** Ames 200B 3/4" (H); Watts 719QT 3/4" (H)
**Shutoffs:** (mm), ll

---

**Type:** DCDA
**Manufacturer:** Ames
**Model:** 3000-1SS
**Size:** 12
**Orientation:** VU
**Meters:** (N), H,I,J,K,L,M,O,P,Q
**Manual:** 9
**0.25% Pb:** No
**Spare Parts Only:** No
**Approved:** 22-Feb-2011
**Renewed:** 22-Feb-2017
**Bypass:** Ames 200B 3/4" (VU); Watts 719QT 3/4" (VU)
**Shutoffs:** (mm), ll

**Type:** DCDA
**Manufacturer:** Ames
**Model:** 3000B
**Size:** 2
**Orientation:** H
**Meters:** (H),A,B,C,D,E,F,G,I,J,K,L,M,N,O,P,Q,T
**Manual:** 9
**0.25% Pb:** No
**Spare Parts Only:** No
**Approved:** 16-Jun-1997
**Renewed:** 16-Jun-2018
**Bypass:** Ames 2000B 1/2" (H), Watts 007QT 1/2" (H)
**Shutoffs:** (bbb),jjjj,rrrrr

---

**Type:** DCDA
**Manufacturer:** Ames
**Model:** 3000B
**Size:** 2
**Orientation:** VU
**Meters:** (H),A,B,C,D,E,F,G,I,J,K,L,M,N,O,P,Q,T
**Manual:** 9
**0.25% Pb:** No
**Spare Parts Only:** No
**Approved:** 16-Jun-1997
**Renewed:** 16-Jun-2018
**Bypass:** Ames 2000B 1/2" (VU), Watts 007QT 1/2" (VU)
**Shutoffs:** (bbb),jjjj,rrrrr

---

**Type:** DCDA
**Manufacturer:** Ames
**Model:** 3000B-FP
**Size:** 2
**Orientation:** H
**Meters:** (H),A,B,C,D,E,F,G,I,J,K,L,M,N,O,P,Q,T
**Manual:** 9
**0.25% Pb:** No
**Spare Parts Only:** No
**Approved:** 01-Sep-2009
**Renewed:** 01-Sep-2018
**Bypass:** Ames 2000B 1/2" (H), Watts 007QT 1/2" (H)
**Shutoffs:** (eeeee)

---

**Type:** DCDA
**Manufacturer:** Ames
**Model:** 3000BM1
**Size:** 2
**Orientation:** H
**Meters:** (H),A,B,C,D,E,F,G,I,J,K,L,M,N,O,P,Q,T
**Manual:** 9
**0.25% Pb:** No
**Spare Parts Only:** No
**Approved:** 19-Jun-2015
**Renewed:** 19-Jun-2018
**Bypass:** Ames 2000B 1/2" (H), Watts 007QT 1/2" (H)
**Shutoffs:** (eeeee), bbb, jjjj,rrrrr

---

**Type:** DCDA
**Manufacturer:** Ames
**Model:** 3000BM1
**Size:** 2
**Orientation:** VU
**Meters:** (H),A,B,C,D,E,F,G,I,J,K,L,M,N,O,P,Q,T
**Manual:** 9
**0.25% Pb:** No
**Spare Parts Only:** No
**Approved:** 19-Jun-2015
**Renewed:** 19-Jun-2018
**Bypass:** Ames 2000B 1/2" (VU), Watts 007QT 1/2" (VU)
**Shutoffs:** (eeeee), bbb, jjjj,rrrrr


2018 © University of Southern California

**Type:** DCDA
**Manufacturer:** Ames
**Model:** 3000CIV
**Size:** 4
**Orientation:** H
**Meters:** (N),A,B,C,D,E,F,G,H,I,J,K,L,M,O,P,Q,T
**Manual:** 6
**0.25% Pb:** No
**Spare Parts Only:** Yes
**Approved:** 27-Jul-1987
**Renewed:** 27-Jul-2017
**Bypass:** Ames 2000B 1/2"(H),Watts 007QT 1/2"(H)
**Shutoffs:** (pp),hh,uu,eee

---

**Type:** DCDA
**Manufacturer:** Ames
**Model:** 3000CIV
**Size:** 4
**Orientation:** VU
**Meters:** (N),A,B,C,D,E,F,G,H,I,J,K,L,M,O,P,Q,T
**Manual:** 8
**0.25% Pb:** No
**Spare Parts Only:** Yes
**Approved:** 27-Aug-1996
**Renewed:** 27-Aug-2017
**Bypass:** Ames 2000B 1/2"(VU),Watts 007QT 1/2"(VU)
**Shutoffs:** (pp),hh,uu,eee

---

**Type:** DCDA
**Manufacturer:** Ames
**Model:** 3000CIV
**Size:** 6
**Orientation:** H
**Meters:** (N),A,B,C,D,E,F,G,H,I,J,K,L,M,O,P,Q,T
**Manual:** 6
**0.25% Pb:** No
**Spare Parts Only:** Yes
**Approved:** 27-Jul-1987
**Renewed:** 27-Jul-2017
**Bypass:** Ames 2000B 1/2"(H),Watts 007QT 1/2"(H)
**Shutoffs:** (pp),hh,uu,eee

---

**Type:** DCDA
**Manufacturer:** Ames
**Model:** 3000CIV
**Size:** 6
**Orientation:** VU
**Meters:** (H),A,B,C,D,E,F,G,I,J,K,L,M,N,O,P,Q,T
**Manual:** 8
**0.25% Pb:** No
**Spare Parts Only:** Yes
**Approved:** 05-Dec-1996
**Renewed:** 05-Dec-2017
**Bypass:** Ames 2000B 1/2" (VU), Watts 007QT 1/2" (VU)
**Shutoffs:** (pp),hh,mm,uu,eee

---

**Type:** DCDA
**Manufacturer:** Ames
**Model:** 3000CIV
**Size:** 8
**Orientation:** H
**Meters:** (N),A,B,C,D,E,F,G,H,I,J,K,L,M,O,P,Q,T
**Manual:** 6
**0.25% Pb:** No
**Spare Parts Only:** Yes
**Approved:** 19-Apr-1987
**Renewed:** 19-Apr-2017
**Bypass:** Ames 2000B 1/2"(H),Watts 007QT 1/2"(H)
**Shutoffs:** (pp),hh,mm,uu,eee

**Type:** DCDA
**Manufacturer:** Ames
**Model:** 3000CIV
**Size:** 8
**Orientation:** VU
**Meters:** (H),A,B,C,D,E,F,G,I,J,K,L,M,N,O,P,Q,T
**Manual:** 8
**0.25% Pb:** No
**Spare Parts Only:** Yes
**Approved:** 05-Dec-1996
**Renewed:** 05-Dec-2017
**Bypass:** Ames 2000B 1/2" (VU), Watts 007QT 1/2" (VU)
**Shutoffs:** (pp),hh,mm,uu,eee

---

**Type:** DCDA
**Manufacturer:** Ames
**Model:** 3000CIV
**Size:** 10
**Orientation:** H
**Meters:** (N),E,F,G,H,I,J,K,L,M,O,P,Q,T
**Manual:** 6
**0.25% Pb:** No
**Spare Parts Only:** Yes
**Approved:** 27-Jul-1987
**Renewed:** 27-Jul-2017
**Bypass:** Ames 2000B 1/2"(H),Watts 007QT 1/2"(H)
**Shutoffs:** (pp),hh,mm,uu,eee

---

**Type:** DCDA
**Manufacturer:** Ames
**Model:** 3000CIV
**Size:** 10
**Orientation:** VU
**Meters:** (H),A,B,C,D,E,F,G,I,J,K,L,M,N,O,P,Q,T
**Manual:** 8
**0.25% Pb:** No
**Spare Parts Only:** Yes
**Approved:** 05-Dec-1996
**Renewed:** 05-Dec-2017
**Bypass:** Ames 2000B 1/2" (VU), Watts 007QT 1/2" (VU)
**Shutoffs:** (pp),hh,mm,uu,eee

---

**Type:** DCDA
**Manufacturer:** Ames
**Model:** 3000DCDA
**Size:** 4
**Orientation:** H
**Meters:** (M),B,C,D,E,F,G,H,I,J,K,L,N,O,P,Q,T
**Manual:** 7
**0.25% Pb:** No
**Spare Parts Only:** Yes
**Approved:** 11-Jan-1988
**Renewed:** 11-Jan-2018
**Bypass:** Watts 007QT 3/4" (H)
**Shutoffs:** uu,ee,ff,gg,hh,mm,oo,pp,ccc,ddd,ffff,gggg
**Notes:** formerly DCDA

---

**Type:** DCDA
**Manufacturer:** Ames
**Model:** 3000DCDA
**Size:** 6
**Orientation:** H
**Meters:** (M),B,C,D,E,F,G,H,I,J,K,L,N,O,P,Q,T
**Manual:** 7
**0.25% Pb:** No
**Spare Parts Only:** Yes
**Approved:** 11-Jan-1988
**Renewed:** 11-Jan-2018
**Bypass:** Watts 709QT 3/4" (H)
**Shutoffs:** uu,ee,ff,gg,hh,mm,oo,pp,ccc,ddd,ffff,gggg
**Notes:** formerly DCDA-I


2018 © University of Southern California

**Type:** DCDA
**Manufacturer:** Ames
**Model:** 3000DCDA
**Size:** 8
**Orientation:** H
**Meters:** (M),B,C,D,E,F,G,H,I,J,K,L,N,O,P,Q,T
**Manual:** 7
**0.25% Pb:** No
**Spare Parts Only:** Yes
**Approved:** 11-Jan-1988
**Renewed:** 11-Jan-2018
**Bypass:** Watts 007QT 3/4" (H)
**Shutoffs:** uu,ee,ff,gg,hh,mm,oo,pp,ccc,ddd,ffff,gggg
**Notes:** formerly DCDA

---

**Type:** DCDA
**Manufacturer:** Ames
**Model:** 3000DCDC
**Size:** 10
**Orientation:** H
**Meters:** (M),B,C,D,E,F,G,H,I,J,K,L,N,O,P,Q,T
**Manual:** 7
**0.25% Pb:** No
**Spare Parts Only:** Yes
**Approved:** 04-Aug-1987
**Renewed:** 04-Aug-2017
**Bypass:** Watts007M2QT 3/4" (H),Watts 709QT 3/4" (H), Ames 2000B 3/4" (H)
**Shutoffs:** (uu),ee,ff,gg,hh,oo,pp,ccc,ddd,ffff,gggg
**Notes:** formerly DCDA

---

**Type:** DCDA
**Manufacturer:** Ames
**Model:** 3000GDCDA
**Size:** 4
**Orientation:** H
**Meters:** (M),B,C,D,E,F,G,H,I,J,K,L,N,O,P,Q,T
**Manual:** 7
**0.25% Pb:** No
**Spare Parts Only:** Yes
**Approved:** 11-Jan-1988
**Renewed:** 11-Jan-2018
**Bypass:** Watts 007QT 3/4" (H)
**Shutoffs:** uu,ee,ff,gg,hh,mm,oo,pp,ccc,ddd,ffff,gggg
**Notes:** formerly DCDA

---

**Type:** DCDA
**Manufacturer:** Ames
**Model:** 3000GDCDA
**Size:** 6
**Orientation:** H
**Meters:** (M),B,C,D,E,F,G,H,I,J,K,L,N,O,P,Q,T
**Manual:** 7
**0.25% Pb:** No
**Spare Parts Only:** Yes
**Approved:** 11-Jan-1988
**Renewed:** 11-Jan-2018
**Bypass:** Watts 709QT 3/4" (H)
**Shutoffs:** uu,ee,ff,gg,hh,mm,oo,pp,ccc,ddd,ffff,gggg
**Notes:** formerly DCDA-I

---

**Type:** DCDA
**Manufacturer:** Ames
**Model:** 3000GDCDA
**Size:** 8
**Orientation:** H
**Meters:** (M),B,C,D,E,F,G,H,I,J,K,L,N,O,P,Q,T
**Manual:** 7
**0.25% Pb:** No
**Spare Parts Only:** Yes
**Approved:** 11-Jan-1988
**Renewed:** 11-Jan-2018
**Bypass:** Watts 007QT 3/4" (H)
**Shutoffs:** uu,ee,ff,gg,hh,mm,oo,pp,ccc,ddd,ffff,gggg
**Notes:** formerly DCDA

**Type:** DCDA
**Manufacturer:** Ames
**Model:** 3000GDCDC
**Size:** 10
**Orientation:** H
**Meters:** (M),B,C,D,E,F,G,H,I,J,K,L,N,O,P,Q,T
**Manual:** 7
**0.25% Pb:** No
**Spare Parts Only:** Yes
**Approved:** 04-Aug-1987
**Renewed:** 04-Aug-2017
**Bypass:** Watts 709QT 3/4" (H)
**Shutoffs:** uu,ee,ff,gg,hh,oo,pp,ccc,ddd,ffff,gggg
**Notes:** formerly DCDC

---

**Type:** DCDA
**Manufacturer:** Ames
**Model:** 3000SE
**Size:** 2 1/2
**Orientation:** H
**Meters:** (M),N,O,P,Q
**Manual:** 8
**0.25% Pb:** No
**Spare Parts Only:** Yes
**Approved:** 10-Sep-1996
**Renewed:** 10-Sep-2017
**Bypass:** Watts007M2QT 3/4" (H), Ames 2000B 3/4" (H)
**Shutoffs:** (mm),ee,ff,gg,hh,ll,oo,pp,tt,uu,ccc,ddd,ffff,gggg

---

**Type:** DCDA
**Manufacturer:** Ames
**Model:** 3000SE
**Size:** 6
**Orientation:** H
**Meters:** (M),A,B,C,D,E,F,G,H,I,J,K,L,N,O,P,Q,T
**Manual:** 8
**0.25% Pb:** No
**Spare Parts Only:** Yes
**Approved:** 24-May-1995
**Renewed:** 24-May-2016
**Bypass:** Watts007M2QT 3/4" (H), Ames 2000B 3/4" (H)
**Shutoffs:** uu,ee,ff,gg,hh,ll,mm,oo,pp,tt,ccc,ddd,ffff,gggg

---

**Type:** DCDA
**Manufacturer:** Ames
**Model:** 3000SE
**Size:** 8
**Orientation:** H
**Meters:** (M),A,B,C,D,E,F,G,H,I,J,K,L,N,O,P,Q,T
**Manual:** 8
**0.25% Pb:** No
**Spare Parts Only:** Yes
**Approved:** 09-Sep-1992
**Renewed:** 09-Sep-2016
**Bypass:** Watts 007M1QT 3/4" (H)
**Shutoffs:** uu,ee,ff,gg,hh,ll,mm,oo,pp,tt,ccc,ddd,ffff,gggg

---

**Type:** DCDA
**Manufacturer:** Ames
**Model:** 3000SEA
**Size:** 8
**Orientation:** H
**Meters:** (M),A,B,C,D,E,F,G,H,I,J,K,L,N,O,P,Q,T
**Manual:** 8
**0.25% Pb:** No
**Spare Parts Only:** Yes
**Approved:** 05-May-1995
**Renewed:** 05-May-2016
**Bypass:** Ames 2000SS 3/4" (H)
**Shutoffs:** uu,ee,ff,gg,hh,ll,mm,oo,pp,tt,ccc,ddd,ffff,gggg


2018 © University of Southern California

**Type:** DCDA
**Manufacturer:** Ames
**Model:** 3000SEWM1
**Size:** 6
**Orientation:** H
**Meters:** (M),A,B,C,D,E,F,G,H,I,J,K,L,N,O,P,Q,T
**Manual:** 8
**0.25% Pb:** No
**Spare Parts Only:** Yes
**Approved:** 22-Nov-1993
**Renewed:** 22-Nov-2017
**Bypass:** Watts 007M1QT 3/4" (H)
**Shutoffs:** (uu),ee,ff,gg,hh,ll,mm,oo,pp,tt,ccc,ddd,ffff,gggg
**Notes:** formerly 3000SS prior to S/N 2EK0320

---

**Type:** DCDA
**Manufacturer:** Ames
**Model:** 3000SS
**Size:** 2 1/2
**Orientation:**
**Meters:**
**Manual:**
**0.25% Pb:** No
**Spare Parts Only:** No
**Approved:**
**Renewed:**
**Bypass:**
**Notes:** to S/N 2EK0320 model designation changed to 3000SSWM1

---

**Type:** DCDA
**Manufacturer:** Ames
**Model:** 3000SS
**Size:** 2 1/2
**Orientation:** H
**Meters:** (M),A,B,C,D,E,F,G,H,I,J,K,L,N,O,P,Q,T
**Manual:** 8
**0.25% Pb:** No
**Spare Parts Only:** No
**Approved:** 24-May-1995
**Renewed:** 24-May-2016
**Bypass:** Watts007M2QT 3/4" (H), Ames 2000B 3/4" (H)
**Shutoffs:** (uu),ee,ff,gg,hh,ll,mm,oo,pp,tt,ccc,ddd,ffff,gggg

---

**Type:** DCDA
**Manufacturer:** Ames
**Model:** 3000SS
**Size:** 3
**Orientation:**
**Meters:**
**Manual:**
**0.25% Pb:** No
**Spare Parts Only:** No
**Approved:**
**Renewed:**
**Bypass:**
**Notes:** to S/N 2EK0320 model designation changed to 3000SSWM1

---

**Type:** DCDA
**Manufacturer:** Ames
**Model:** 3000SS
**Size:** 3
**Orientation:** H
**Meters:** (M),A,B,C,D,E,F,G,H,I,J,K,L,N,O,P,Q,T
**Manual:** 8
**0.25% Pb:** No
**Spare Parts Only:** No
**Approved:** 24-May-1995
**Renewed:** 24-May-2016
**Bypass:** Watts007M2QT 3/4" (H), Ames 2000B 3/4" (H)
**Shutoffs:** (uu),ee,ff,gg,hh,ll,mm,oo,pp,tt,ccc,ddd,ffff,gggg

---

**Type:** DCDA
**Manufacturer:** Ames
**Model:** 3000SS
**Size:** 4
**Orientation:**
**Meters:**
**Manual:**
**0.25% Pb:** No
**Spare Parts Only:** No
**Approved:**
**Renewed:**
**Bypass:**
**Notes:** to S/N 2EK0320 model designation changed to 3000SSWM1

**Type:** DCDA
**Manufacturer:** Ames
**Model:** 3000SS
**Size:** 4
**Orientation:** H
**Meters:** (M),A,B,C,D,E,F,G,H,I,J,K,L,N,O,P,Q,T
**Manual:** 8
**0.25% Pb:** No
**Spare Parts Only:** No
**Approved:** 24-May-1995
**Renewed:** 24-May-2016
**Bypass:** Watts007M2QT 3/4" (H), Ames 2000B 3/4" (H)
**Shutoffs:** (uu),ee,ff,gg,hh,ll,mm,oo,pp,tt,ccc,ddd,ffff,gggg

---

**Type:** DCDA
**Manufacturer:** Ames
**Model:** 3000SS
**Size:** 6
**Orientation:**
**Meters:**
**Manual:**
**0.25% Pb:** No
**Spare Parts Only:** No
**Approved:**
**Renewed:**
**Bypass:**
**Notes:** to S/N 2EK0320 model designation changed to 3000SEWM1

---

**Type:** DCDA
**Manufacturer:** Ames
**Model:** 3000SS
**Size:** 6
**Orientation:** H
**Meters:** (M),A,B,C,D,E,F,G,H,I,J,K,L,N,O,P,Q,T
**Manual:** 8
**0.25% Pb:** No
**Spare Parts Only:** No
**Approved:** 09-Sep-1992
**Renewed:** 09-Sep-2016
**Bypass:** Watts 007M1QT 3/4" (H)
**Shutoffs:** (uu),ee,ff,gg,hh,ll,mm,oo,pp,tt,ccc,ddd,ffff,gggg

---

**Type:** DCDA
**Manufacturer:** Ames
**Model:** 3000SS
**Size:** 8
**Orientation:** H
**Meters:** (M),A,B,C,D,E,F,G,H,I,J,K,L,N,O,P,Q,T
**Manual:** 8
**0.25% Pb:** No
**Spare Parts Only:** No
**Approved:** 16-Sep-1996
**Renewed:** 16-Sep-2017
**Bypass:** Watts007M2QT 3/4" (H), Ames 2000B 3/4" (H)
**Shutoffs:** (uu),ee,ff,gg,hh,ll,mm,tt,ccc,ddd,ffff,gggg

---

**Type:** DCDA
**Manufacturer:** Ames
**Model:** 3000SS
**Size:** 10
**Orientation:** H
**Meters:** (J),C,E,F,G,H,I,K,L,M,N,O,P,Q,T
**Manual:** 8
**0.25% Pb:** No
**Spare Parts Only:** No
**Approved:** 16-Feb-2001
**Renewed:** 16-Feb-2016
**Bypass:** Ames 2000B 3/4" (H)
**Shutoffs:** (ll),mm,oo,pp,ffff,gggg

---

**Type:** DCDA
**Manufacturer:** Ames
**Model:** 3000SS
**Size:** 12
**Orientation:** H
**Meters:** (N), H,I,J,K,L,M,O,P,Q
**Manual:** 9
**0.25% Pb:** No
**Spare Parts Only:** No
**Approved:** 04-Dec-2009
**Renewed:** 04-Dec-2015
**Bypass:** Ames 2000BM3 3/4" (H)
**Shutoffs:** (mm), ll


2018 © University of Southern California

**Type:** DCDA
**Manufacturer:** Ames
**Model:** 3000SS
**Size:** 12
**Orientation:** VU
**Meters:** (N), H,I,J,K,L,M,O,P,Q
**Manual:** 9
**0.25% Pb:** No
**Spare Parts Only:** No
**Approved:** 22-Feb-2011
**Renewed:** 22-Feb-2017
**Bypass:** Ames 2000BM3 3/4" (VU)
**Shutoffs:** (mm), ll

---

**Type:** DCDA
**Manufacturer:** Ames
**Model:** 3000SSA
**Size:** 6
**Orientation:** H
**Meters:** (M),A,B,C,D,E,F,G,H,I,J,K,L,N,O,P,Q,T
**Manual:** 8
**0.25% Pb:** No
**Spare Parts Only:** Yes
**Approved:** 05-May-1995
**Renewed:** 05-May-2016
**Bypass:** Ames 2000SS 3/4" (H)
**Shutoffs:** uu,ee,ff,gg,hh,ll,mm,oo,pp,tt,ccc,ddd,ffff,gggg

---

**Type:** DCDA
**Manufacturer:** Ames
**Model:** 3000SSM
**Size:** 4
**Orientation:** H
**Meters:** (R)
**Manual:** 8
**0.25% Pb:** No
**Spare Parts Only:** Yes
**Approved:** 05-May-1995
**Renewed:** 05-May-2016
**Bypass:** Ames 2000SS 1" (H)
**Shutoffs:** uu,ee,ff,gg,hh,ll,mm,oo,pp,tt,ccc,ddd,ffff,gggg

---

**Type:** DCDA
**Manufacturer:** Ames
**Model:** 3000SSM
**Size:** 6
**Orientation:** H
**Meters:** (S)
**Manual:** 8
**0.25% Pb:** No
**Spare Parts Only:** No
**Approved:** 05-May-1995
**Renewed:** 05-May-2016
**Bypass:** Watts 007M2QT 1 1/2" (H)
**Shutoffs:** (uu),ee,ff,gg,hh,ll,mm,oo,pp,tt,ccc,ddd,ffff,gggg

---

**Type:** DCDA
**Manufacturer:** Ames
**Model:** 3000SSWM1
**Size:** 2 1/2
**Orientation:** H
**Meters:** (M),A,B,C,D,E,F,G,H,I,J,K,L,N,O,P,Q,T
**Manual:** 8
**0.25% Pb:** No
**Spare Parts Only:** No
**Approved:** 11-Jul-1991
**Renewed:** 11-Jul-2018
**Bypass:** Watts 007M1QT 3/4" (H)
**Shutoffs:** (uu),ee,ff,gg,hh,ll,mm,oo,pp,tt,ccc,ddd,ffff,gggg
**Notes:** formerly 3000SS prior to S/N 2EK0320

---

**Type:** DCDA
**Manufacturer:** Ames
**Model:** 3000SSWM1
**Size:** 3
**Orientation:** H
**Meters:** (M),A,B,C,D,E,F,G,H,I,J,K,L,N,O,P,Q,T
**Manual:** 8
**0.25% Pb:** No
**Spare Parts Only:** No
**Approved:** 11-Jul-1991
**Renewed:** 11-Jul-2018
**Bypass:** Watts 007M1QT 3/4" (H)
**Shutoffs:** (uu),ee,ff,gg,hh,ll,mm,oo,pp,tt,ccc,ddd,ffff,gggg
**Notes:** formerly 3000SS prior to S/N 2EK0320

**Type:** DCDA
**Manufacturer:** Ames
**Model:** 3000SSWM1
**Size:** 4
**Orientation:** H
**Meters:** (M),A,B,C,D,E,F,G,H,I,J,K,L,N,O,P,Q,T
**Manual:** 8
**0.25% Pb:** No
**Spare Parts Only:** No
**Approved:** 11-Jul-1991
**Renewed:** 11-Jul-2018
**Bypass:** Watts 007M1QT 3/4" (H)
**Shutoffs:** (uu),ee,ff,gg,hh,ll,mm,oo,pp,tt,ccc,ddd,ffff,gggg
**Notes:** formerly 3000SS prior to S/N 2EK0320

---

**Type:** DCDA
**Manufacturer:** Ames
**Model:** Colt 300aBF
**Size:** 2 1/2
**Orientation:** H
**Meters:** (N),G,H,I,J,K,L,M,O,P,Q,T
**Manual:** 9
**0.25% Pb:** No
**Spare Parts Only:** No
**Approved:** 06-Nov-2003
**Renewed:** 06-Nov-2015
**Bypass:** Ames 2000BM3 3/4" (H)
**Shutoffs:** (yyy)

---

**Type:** DCDA
**Manufacturer:** Ames
**Model:** Colt 300aBF
**Size:** 2 1/2
**Orientation:** VU
**Meters:** (N),G,H,I,J,K,L,M,O,P,Q,T
**Manual:** 9
**0.25% Pb:** No
**Spare Parts Only:** No
**Approved:** 06-Nov-2003
**Renewed:** 06-Nov-2015
**Bypass:** Ames 2000BM3 3/4" (VU)
**Shutoffs:** (yyy)

---

**Type:** DCDA
**Manufacturer:** Ames
**Model:** Colt 300aBF
**Size:** 3
**Orientation:** H
**Meters:** (N),G,H,I,J,K,L,M,O,P,Q,T
**Manual:** 9
**0.25% Pb:** No
**Spare Parts Only:** No
**Approved:** 06-Nov-2003
**Renewed:** 06-Nov-2015
**Bypass:** Ames 2000BM3 3/4" (H)
**Shutoffs:** (yyy)

---

**Type:** DCDA
**Manufacturer:** Ames
**Model:** Colt 300aBF
**Size:** 3
**Orientation:** VU
**Meters:** (N),G,H,I,J,K,L,M,O,P,Q,T
**Manual:** 9
**0.25% Pb:** No
**Spare Parts Only:** No
**Approved:** 06-Nov-2003
**Renewed:** 06-Nov-2015
**Bypass:** Ames 2000BM3 3/4" (VU)
**Shutoffs:** (yyy)

---

**Type:** DCDA
**Manufacturer:** Ames
**Model:** Colt 300aBF
**Size:** 4
**Orientation:** H
**Meters:** (N),G,H,I,J,K,L,M,O,P,Q,T
**Manual:** 9
**0.25% Pb:** No
**Spare Parts Only:** No
**Approved:** 06-Nov-2003
**Renewed:** 06-Nov-2015
**Bypass:** Ames 2000BM3 3/4" (H)
**Shutoffs:** (yyy)


2018 © University of Southern California

**Type:** DCDA
**Size:** 4
**Manual:** 9
**Approved:** 06-Nov-2003
**Shutoffs:** (yyy)
**Manufacturer:** Ames
**Orientation:** VU
**0.25% Pb:** No
**Renewed:** 06-Nov-2015
**Model:** Colt 300aBF
**Meters:** (N),G,H,I,J,K,L,M,O,P,Q,T
**Spare Parts Only:** No
**Bypass:** Ames 2000BM3 3/4" (VU)

---

**Type:** DCDA
**Size:** 6
**Manual:** 9
**Approved:** 29-Sep-2004
**Shutoffs:** (yyy)
**Manufacturer:** Ames
**Orientation:** H
**0.25% Pb:** No
**Renewed:** 29-Sep-2016
**Model:** Colt 300aBF
**Meters:** (N),G,H,I,J,K,L,M,O,P,Q,T
**Spare Parts Only:** No
**Bypass:** Ames 2000BM3 3/4" (H)

---

**Type:** DCDA
**Size:** 6
**Manual:** 9
**Approved:** 18-Jan-2005
**Shutoffs:** (yyy)
**Manufacturer:** Ames
**Orientation:** VU
**0.25% Pb:** No
**Renewed:** 18-Jan-2017
**Model:** Colt 300aBF
**Meters:** (N),G,H,I,J,K,L,M,O,P,Q,T
**Spare Parts Only:** No
**Bypass:** Ames 2000BM3 3/4" (VU)

---

**Type:** DCDA
**Size:** 2 1/2
**Manual:** 9
**Approved:** 06-Oct-2003
**Shutoffs:** (zzz)
**Manufacturer:** Ames
**Orientation:** H
**0.25% Pb:** No
**Renewed:** 06-Oct-2018
**Model:** Colt 300aGV
**Meters:** (N),G,H,I,J,K,L,M,O,P,Q,T
**Spare Parts Only:** No
**Bypass:** Ames 2000BM3 3/4" (H)

---

**Type:** DCDA
**Size:** 2 1/2
**Manual:** 9
**Approved:** 06-Oct-2003
**Shutoffs:** (zzz)
**Manufacturer:** Ames
**Orientation:** VU
**0.25% Pb:** No
**Renewed:** 06-Oct-2018
**Model:** Colt 300aGV
**Meters:** (N),G,H,I,J,K,L,M,O,P,Q,T
**Spare Parts Only:** No
**Bypass:** Ames 2000BM3 3/4" (VU)

---

**Type:** DCDA
**Size:** 3
**Manual:** 9
**Approved:** 06-Oct-2003
**Shutoffs:** (zzz)
**Manufacturer:** Ames
**Orientation:** H
**0.25% Pb:** No
**Renewed:** 06-Oct-2018
**Model:** Colt 300aGV
**Meters:** (N),G,H,I,J,K,L,M,O,P,Q,T
**Spare Parts Only:** No
**Bypass:** Ames 2000BM3 3/4" (H)

---

**Type:** DCDA
**Size:** 3
**Manual:** 9
**Approved:** 06-Oct-2003
**Shutoffs:** (zzz)
**Manufacturer:** Ames
**Orientation:** VU
**0.25% Pb:** No
**Renewed:** 06-Oct-2018
**Model:** Colt 300aGV
**Meters:** (N),G,H,I,J,K,L,M,O,P,Q,T
**Spare Parts Only:** No
**Bypass:** Ames 2000BM3 3/4" (VU)

**Type:** DCDA
**Size:** 4
**Manual:** 9
**Approved:** 06-Oct-2003
**Shutoffs:** (zzz)
**Manufacturer:** Ames
**Orientation:** H
**0.25% Pb:** No
**Renewed:** 06-Oct-2018
**Model:** Colt 300aGV
**Meters:** (N),G,H,I,J,K,L,M,O,P,Q,T
**Spare Parts Only:** No
**Bypass:** Ames 2000BM3 3/4" (H)

---

**Type:** DCDA
**Size:** 4
**Manual:** 9
**Approved:** 06-Oct-2003
**Shutoffs:** (zzz)
**Manufacturer:** Ames
**Orientation:** VU
**0.25% Pb:** No
**Renewed:** 06-Oct-2018
**Model:** Colt 300aGV
**Meters:** (N),G,H,I,J,K,L,M,O,P,Q,T
**Spare Parts Only:** No
**Bypass:** Ames 2000BM3 3/4" (VU)

---

**Type:** DCDA
**Size:** 6
**Manual:** 9
**Approved:** 03-Nov-2004
**Shutoffs:** (zzz)
**Manufacturer:** Ames
**Orientation:** H
**0.25% Pb:** No
**Renewed:** 03-Nov-2016
**Model:** Colt 300aGV
**Meters:** (N),G,H,I,J,K,L,M,O,P,Q,T
**Spare Parts Only:** No
**Bypass:** Ames 2000BM3 3/4 (H)

---

**Type:** DCDA
**Size:** 6
**Manual:** 9
**Approved:** 18-Jan-2005
**Shutoffs:** (zzz)
**Manufacturer:** Ames
**Orientation:** VU
**0.25% Pb:** No
**Renewed:** 18-Jan-2017
**Model:** Colt 300aGV
**Meters:** (N),G,H,I,J,K,L,M,O,P,Q,T
**Spare Parts Only:** No
**Bypass:** Ames 2000BM3 3/4" (VU)

---

**Type:** DCDA
**Size:** 2 1/2
**Manual:** 9
**Approved:** 04-Oct-2005
**Shutoffs:** (yyy)
**Manufacturer:** Ames
**Orientation:** H
**0.25% Pb:** No
**Renewed:** 04-Oct-2017
**Model:** Colt 300BF
**Meters:** (N),G,H,I,J,K,L,M,O,P,Q,T
**Spare Parts Only:** No
**Bypass:** Ames 2000BM3 3/4" (H)

---

**Type:** DCDA
**Size:** 2 1/2
**Manual:** 9
**Approved:** 04-Oct-2005
**Shutoffs:** (yyy)
**Manufacturer:** Ames
**Orientation:** VU
**0.25% Pb:** No
**Renewed:** 04-Oct-2017
**Model:** Colt 300BF
**Meters:** (N),G,H,I,J,K,L,M,O,P,Q,T
**Spare Parts Only:** No
**Bypass:** Ames 2000BM3 3/4" (VU)

---

**Type:** DCDA
**Size:** 3
**Manual:** 9
**Approved:** 04-Oct-2005
**Shutoffs:** (yyy)
**Manufacturer:** Ames
**Orientation:** H
**0.25% Pb:** No
**Renewed:** 04-Oct-2017
**Model:** Colt 300BF
**Meters:** (N),G,H,I,J,K,L,M,O,P,Q,T
**Spare Parts Only:** No
**Bypass:** Ames 2000BM3 3/4" (H)


2018 © University of Southern California

**Type:** DCDA
**Size:** 3
**Manual:** 9
**Approved:** 04-Oct-2005
**Shutoffs:** (yyy)
**Manufacturer:** Ames
**Orientation:** VU
**0.25% Pb:** No
**Renewed:** 04-Oct-2017
**Model:** Colt 300BF
**Meters:** (N),G,H,I,J,K,L,M,O,P,Q,T
**Spare Parts Only:** No
**Bypass:** Ames 2000BM3 3/4" (VU)

---

**Type:** DCDA
**Size:** 4
**Manual:** 9
**Approved:** 04-Oct-2005
**Shutoffs:** (yyy)
**Manufacturer:** Ames
**Orientation:** H
**0.25% Pb:** No
**Renewed:** 04-Oct-2017
**Model:** Colt 300BF
**Meters:** (N),G,H,I,J,K,L,M,O,P,Q,T
**Spare Parts Only:** No
**Bypass:** Ames 2000BM3 3/4" (H)

---

**Type:** DCDA
**Size:** 4
**Manual:** 9
**Approved:** 04-Oct-2005
**Shutoffs:** (yyy)
**Manufacturer:** Ames
**Orientation:** VU
**0.25% Pb:** No
**Renewed:** 04-Oct-2017
**Model:** Colt 300BF
**Meters:** (N),G,H,I,J,K,L,M,O,P,Q,T
**Spare Parts Only:** No
**Bypass:** Ames 2000BM3 3/4" (VU)

---

**Type:** DCDA
**Size:** 6
**Manual:** 9
**Approved:** 02-Mar-2007
**Shutoffs:** (yyy)
**Manufacturer:** Ames
**Orientation:** H
**0.25% Pb:** No
**Renewed:** 02-Mar-2016
**Model:** Colt 300BF
**Meters:** (N),G,H,I,J,K,L,M,O,P,Q,T
**Spare Parts Only:** No
**Bypass:** Ames 2000BM3 3/4"(H)

---

**Type:** DCDA
**Size:** 6
**Manual:** 9
**Approved:** 02-Mar-2007
**Shutoffs:** (yyy)
**Manufacturer:** Ames
**Orientation:** VU
**0.25% Pb:** No
**Renewed:** 02-Mar-2016
**Model:** Colt 300BF
**Meters:** (N),G,H,I,J,K,L,M,O,P,Q,T
**Spare Parts Only:** No
**Bypass:** Ames 2000BM3 3/4"(V)

---

**Type:** DCDA
**Size:** 8
**Manual:** 9
**Approved:** 09-Mar-2007
**Shutoffs:** (yyy)
**Manufacturer:** Ames
**Orientation:** H
**0.25% Pb:** No
**Renewed:** 09-Mar-2016
**Model:** Colt 300BF
**Meters:** (N),G,H,I,J,K,L,M,O,P,Q,T
**Spare Parts Only:** No
**Bypass:** Ames 2000BM3 3/4" (H & VU)

---

**Type:** DCDA
**Size:** 8
**Manual:** 9
**Approved:** 09-Mar-2007
**Shutoffs:** (yyy)
**Manufacturer:** Ames
**Orientation:** VU
**0.25% Pb:** No
**Renewed:** 09-Mar-2016
**Model:** Colt 300BF
**Meters:** (N),G,H,I,J,K,L,M,O,P,Q,T
**Spare Parts Only:** No
**Bypass:** Ames 2000BM3 3/4" (H & VU)

**Type:** DCDA
**Size:** 10
**Manual:** 9
**Approved:** 17-Sep-2009
**Shutoffs:** (yyy)

**Manufacturer:** Ames
**Orientation:** H
**0.25% Pb:** No
**Renewed:** 17-Sep-2018

**Model:** Colt 300BF
**Meters:** (N),G,H,I,J,K,L,M,O,P,Q,T
**Spare Parts Only:** No
**Bypass:** Watts 007M3QT 3/4" (H), Ames 2000 BM3 (H)

---

**Type:** DCDA
**Size:** 10
**Manual:** 9
**Approved:** 17-Sep-2009
**Shutoffs:** (yyy)

**Manufacturer:** Ames
**Orientation:** VU
**0.25% Pb:** No
**Renewed:** 17-Sep-2018

**Model:** Colt 300BF
**Meters:** (N),G,H,I,J,K,L,M,O,P,Q,T
**Spare Parts Only:** No
**Bypass:** Watts 007M3QT 3/4" (V), Ames 2000 BM3 (V)

---

**Type:** DCDA
**Size:** 2 1/2
**Manual:** 9
**Approved:** 04-Oct-2005
**Shutoffs:** (zzz)

**Manufacturer:** Ames
**Orientation:** H
**0.25% Pb:** No
**Renewed:** 04-Oct-2017

**Model:** Colt 300GV
**Meters:** (N),G,H,I,J,K,L,M,O,P,Q,T
**Spare Parts Only:** No
**Bypass:** Ames 2000BM3 3/4" (H)

---

**Type:** DCDA
**Size:** 2 1/2
**Manual:** 9
**Approved:** 04-Oct-2005
**Shutoffs:** (zzz)

**Manufacturer:** Ames
**Orientation:** VU
**0.25% Pb:** No
**Renewed:** 04-Oct-2017

**Model:** Colt 300GV
**Meters:** (N),G,H,I,J,K,L,M,O,P,Q,T
**Spare Parts Only:** No
**Bypass:** Ames 2000BM3 3/4" (VU)

---

**Type:** DCDA
**Size:** 3
**Manual:** 9
**Approved:** 04-Oct-2005
**Shutoffs:** (zzz)

**Manufacturer:** Ames
**Orientation:** H
**0.25% Pb:** No
**Renewed:** 04-Oct-2017

**Model:** Colt 300GV
**Meters:** (N),G,H,I,J,K,L,M,O,P,Q,T
**Spare Parts Only:** No
**Bypass:** Ames 2000BM3 3/4" (H)

---

**Type:** DCDA
**Size:** 3
**Manual:** 9
**Approved:** 04-Oct-2005
**Shutoffs:** (zzz)

**Manufacturer:** Ames
**Orientation:** VU
**0.25% Pb:** No
**Renewed:** 04-Oct-2017

**Model:** Colt 300GV
**Meters:** (N),G,H,I,J,K,L,M,O,P,Q,T
**Spare Parts Only:** No
**Bypass:** Ames 2000BM3 3/4" (VU)


2018 © University of Southern California

**Type:** DCDA
**Size:** 4
**Manual:** 9
**Approved:** 04-Oct-2005
**Shutoffs:** (zzz)
**Manufacturer:** Ames
**Orientation:** H
**0.25% Pb:** No
**Renewed:** 04-Oct-2017
**Model:** Colt 300GV
**Meters:** (N),G,H,I,J,K,L,M,O,P,Q,T
**Spare Parts Only:** No
**Bypass:** Ames 2000BM3 3/4" (H)

---

**Type:** DCDA
**Size:** 4
**Manual:** 9
**Approved:** 04-Oct-2005
**Shutoffs:** (zzz)
**Manufacturer:** Ames
**Orientation:** VU
**0.25% Pb:** No
**Renewed:** 04-Oct-2017
**Model:** Colt 300GV
**Meters:** (N),G,H,I,J,K,L,M,O,P,Q,T
**Spare Parts Only:** No
**Bypass:** Ames 2000BM3 3/4" (VU)

---

**Type:** DCDA
**Size:** 6
**Manual:** 9
**Approved:** 02-Mar-2007
**Shutoffs:** (zzz)
**Manufacturer:** Ames
**Orientation:** H
**0.25% Pb:** No
**Renewed:** 02-Mar-2016
**Model:** Colt 300GV
**Meters:** (N),G,H,I,J,K,L,M,O,P,Q,T
**Spare Parts Only:** No
**Bypass:** Ames 2000BM3 3/4"(H)

---

**Type:** DCDA
**Size:** 6
**Manual:** 9
**Approved:** 02-Mar-2007
**Shutoffs:** (zzz)
**Manufacturer:** Ames
**Orientation:** VU
**0.25% Pb:** No
**Renewed:** 02-Mar-2016
**Model:** Colt 300GV
**Meters:** (N),G,H,I,J,K,L,M,O,P,Q,T
**Spare Parts Only:** No
**Bypass:** Ames 2000BM3 3/4"(V)

---

**Type:** DCDA
**Size:** 8
**Manual:** 9
**Approved:** 09-Mar-2007
**Shutoffs:** (zzz)
**Manufacturer:** Ames
**Orientation:** H
**0.25% Pb:** No
**Renewed:** 09-Mar-2016
**Model:** Colt 300GV
**Meters:** (N),G,H,I,J,K,L,M,O,P,Q,T
**Spare Parts Only:** No
**Bypass:** Ames 2000BM3 3/4" (H & VU)

---

**Type:** DCDA
**Size:** 8
**Manual:** 9
**Approved:** 09-Mar-2007
**Shutoffs:** (zzz)
**Manufacturer:** Ames
**Orientation:** VU
**0.25% Pb:** No
**Renewed:** 09-Mar-2016
**Model:** Colt 300GV
**Meters:** (N),G,H,I,J,K,L,M,O,P,Q,T
**Spare Parts Only:** No
**Bypass:** Ames 2000BM3 3/4" (H & VU)

2018 © University of Southern California

**Type:** DCDA
**Size:** 10
**Manual:** 9
**Approved:** 17-Sep-2009
**Shutoffs:** (zzz)

**Manufacturer:** Ames
**Orientation:** H
**0.25% Pb:** No
**Renewed:** 17-Sep-2018

**Model:** Colt 300GV
**Meters:** (N),G,H,I,J,K,L,M,O,P,Q,T
**Spare Parts Only:** No
**Bypass:** Watts 007M3QT 3/4" (H), Ames 2000 BM3 (H)

---

**Type:** DCDA
**Size:** 10
**Manual:** 9
**Approved:** 17-Sep-2009
**Shutoffs:** (zzz)

**Manufacturer:** Ames
**Orientation:** VU
**0.25% Pb:** No
**Renewed:** 17-Sep-2018

**Model:** Colt 300GV
**Meters:** (N),G,H,I,J,K,L,M,O,P,Q,T
**Spare Parts Only:** No
**Bypass:** Watts 007M3QT 3/4" (V), Ames 2000 BM3 (V)

---

**Type:** DCDA
**Size:** 2 1/2
**Manual:** 9
**Approved:** 07-Apr-2009
**Shutoffs:** (yyy)

**Manufacturer:** Ames
**Orientation:** VUVD
**0.25% Pb:** No
**Renewed:** 07-Apr-2018

**Model:** Colt 300NBF
**Meters:** (N),G,H,I,J,K,L,M,O,P,Q,T
**Spare Parts Only:** No
**Bypass:** Ames 2000BM3 3/4" (H)

---

**Type:** DCDA
**Size:** 3
**Manual:** 9
**Approved:** 07-Apr-2009
**Shutoffs:** (yyy)

**Manufacturer:** Ames
**Orientation:** VUVD
**0.25% Pb:** No
**Renewed:** 07-Apr-2018

**Model:** Colt 300NBF
**Meters:** (N),G,H,I,J,K,L,M,O,P,Q,T
**Spare Parts Only:** No
**Bypass:** Ames 2000BM3 3/4" (H)

---

**Type:** DCDA
**Size:** 4
**Manual:** 9
**Approved:** 07-Apr-2009
**Shutoffs:** (yyy)

**Manufacturer:** Ames
**Orientation:** VUVD
**0.25% Pb:** No
**Renewed:** 07-Apr-2018

**Model:** Colt 300NBF
**Meters:** (N),G,H,I,J,K,L,M,O,P,Q,T
**Spare Parts Only:** No
**Bypass:** Ames 2000BM3 3/4" (H)

---

**Type:** DCDA
**Size:** 6
**Manual:** 9
**Approved:** 07-Apr-2009
**Shutoffs:** (yyy)

**Manufacturer:** Ames
**Orientation:** VUVD
**0.25% Pb:** No
**Renewed:** 07-Apr-2018

**Model:** Colt 300NBF
**Meters:** (N),G,H,I,J,K,L,M,O,P,Q,T
**Spare Parts Only:** No
**Bypass:** Ames 2000BM3 3/4" (H)


2018 © University of Southern California

**Type:** DCDA
**Size:** 8
**Manual:** 9
**Approved:** 03-Jan-2013
**Shutoffs:** (yyy)

**Manufacturer:** Ames
**Orientation:** VUVD
**0.25% Pb:** No
**Renewed:** 03-Jan-2016

**Model:** Colt 300NBF
**Meters:** (N),G,H,I,J,K,L,M,O,P,Q,T
**Spare Parts Only:** No
**Bypass:** Ames 2000BM3 3/4" (H)

---

**Type:** DCDA
**Size:** 10
**Manual:** 9
**Approved:** 28-May-2013
**Shutoffs:** (yyy)

**Manufacturer:** Ames
**Orientation:** VUVD
**0.25% Pb:** No
**Renewed:** 28-May-2016

**Model:** Colt 300NBF
**Meters:** (N), H,I,J,K,L,M,N,O,P,Q
**Spare Parts Only:** No
**Bypass:** Ames 2000BM3 3/4" (H), Watts 007M3QT 3/4" (H)

---

**Type:** DCDA
**Size:** 2 1/2
**Manual:** 9
**Approved:** 07-Apr-2009
**Shutoffs:** (zzz)

**Manufacturer:** Ames
**Orientation:** VUVD
**0.25% Pb:** No
**Renewed:** 07-Apr-2018

**Model:** Colt 300NGV
**Meters:** (N),G,H,I,J,K,L,M,O,P,Q,T
**Spare Parts Only:** No
**Bypass:** Ames 2000BM3 3/4" (H)

---

**Type:** DCDA
**Size:** 3
**Manual:** 9
**Approved:** 07-Apr-2009
**Shutoffs:** (zzz)

**Manufacturer:** Ames
**Orientation:** VUVD
**0.25% Pb:** No
**Renewed:** 07-Apr-2018

**Model:** Colt 300NGV
**Meters:** (N),G,H,I,J,K,L,M,O,P,Q,T
**Spare Parts Only:** No
**Bypass:** Ames 2000BM3 3/4" (H)

---

**Type:** DCDA
**Size:** 4
**Manual:** 9
**Approved:** 07-Apr-2009
**Shutoffs:** (zzz)

**Manufacturer:** Ames
**Orientation:** VUVD
**0.25% Pb:** No
**Renewed:** 07-Apr-2018

**Model:** Colt 300NGV
**Meters:** (N),G,H,I,J,K,L,M,O,P,Q,T
**Spare Parts Only:** No
**Bypass:** Ames 2000BM3 3/4" (H)

---

**Type:** DCDA
**Size:** 6
**Manual:** 9
**Approved:** 07-Apr-2009
**Shutoffs:** (zzz)

**Manufacturer:** Ames
**Orientation:** VUVD
**0.25% Pb:** No
**Renewed:** 07-Apr-2018

**Model:** Colt 300NGV
**Meters:** (N),G,H,I,J,K,L,M,O,P,Q,T
**Spare Parts Only:** No
**Bypass:** Ames 2000BM3 3/4" (H)

**Type:** DCDA
**Size:** 8
**Manual:** 9
**Approved:** 03-Jan-2013
**Shutoffs:** (zzz)
**Manufacturer:** Ames
**Orientation:** VUVD
**0.25% Pb:** No
**Renewed:** 03-Jan-2016
**Model:** Colt 300NGV
**Meters:** (N),G,H,I,J,K,L,M,O,P,Q,T
**Spare Parts Only:** No
**Bypass:** Ames 2000BM3 3/4" (H)

---

**Type:** DCDA
**Size:** 10
**Manual:** 9
**Approved:** 28-May-2013
**Shutoffs:** (zzz)
**Manufacturer:** Ames
**Orientation:** VUVD
**0.25% Pb:** No
**Renewed:** 28-May-2016
**Model:** Colt 300NGV
**Meters:** (N), H,I,J,K,L,M,N,O,P,Q
**Spare Parts Only:** No
**Bypass:** Ames 2000BM3 3/4" (H), Watts 007M3QT 3/4" (H)

---

**Type:** DCDA
**Size:** 4
**Manual:**
**Approved:**
**Notes:** model designation changed to 3000DCDA
**Manufacturer:** Ames
**Orientation:**
**0.25% Pb:** No
**Renewed:**
**Model:** DCDA
**Meters:**
**Spare Parts Only:** No
**Bypass:**

---

**Type:** DCDA
**Size:** 4
**Manual:**
**Approved:**
**Notes:** model designation changed to 3000GDCDA
**Manufacturer:** Ames
**Orientation:**
**0.25% Pb:** No
**Renewed:**
**Model:** DCDA
**Meters:**
**Spare Parts Only:** No
**Bypass:**

---

**Type:** DCDA
**Size:** 8
**Manual:**
**Approved:**
**Notes:** model designation changed to 3000DCDA
**Manufacturer:** Ames
**Orientation:**
**0.25% Pb:** No
**Renewed:**
**Model:** DCDA
**Meters:**
**Spare Parts Only:** No
**Bypass:**

---

**Type:** DCDA
**Size:** 8
**Manual:**
**Approved:**
**Notes:** model designation changed to 3000GDCDA
**Manufacturer:** Ames
**Orientation:**
**0.25% Pb:** No
**Renewed:**
**Model:** DCDA
**Meters:**
**Spare Parts Only:** No
**Bypass:**


2018 © University of Southern California

**Type:** DCDA
**Manufacturer:** Ames
**Model:** DCDA
**Size:** 10
**Orientation:**
**Meters:**
**Manual:**
**0.25% Pb:** No
**Spare Parts Only:** No
**Approved:**
**Renewed:**
**Bypass:**
**Notes:** model designation changed to 3000DCDC

---

**Type:** DCDA
**Manufacturer:** Ames
**Model:** DCDA-I
**Size:** 6
**Orientation:**
**Meters:**
**Manual:**
**0.25% Pb:** No
**Spare Parts Only:** No
**Approved:**
**Renewed:**
**Bypass:**
**Notes:** model designation changed to 3000DCDA

---

**Type:** DCDA
**Manufacturer:** Ames
**Model:** DCDA-I
**Size:** 6
**Orientation:**
**Meters:**
**Manual:**
**0.25% Pb:** No
**Spare Parts Only:** No
**Approved:**
**Renewed:**
**Bypass:**
**Notes:** model designation changed to 3000GDCDA

---

**Type:** DCDA
**Manufacturer:** Ames
**Model:** DCDC
**Size:** 4
**Orientation:** H
**Meters:** (K),A,B,C,D,E,F,G,H,I,J,L,M,N,O,P,Q,T
**Manual:** 6
**0.25% Pb:** No
**Spare Parts Only:** Yes
**Approved:** 14-Jun-1985
**Renewed:** 14-Jun-2018
**Bypass:** Watts 709QT 3/4" (H)
**Shutoffs:** ee,ff,gg,hh,oo,pp,ccc,ddd,ffff,gggg

---

**Type:** DCDA
**Manufacturer:** Ames
**Model:** DCDC
**Size:** 6
**Orientation:** H
**Meters:** (K),A,B,C,D,E,F,G,H,I,J,L,M,N,O,P,Q,T
**Manual:** 6
**0.25% Pb:** No
**Spare Parts Only:** Yes
**Approved:** 14-Jun-1985
**Renewed:** 14-Jun-2018
**Bypass:** Watts 709QT 3/4" (H)
**Shutoffs:** ee,ff,gg,hh,oo,pp,ccc,ddd,ffff,gggg

---

**Type:** DCDA
**Manufacturer:** Ames
**Model:** DCDC
**Size:** 8
**Orientation:** H
**Meters:** (K),A,B,C,D,E,F,G,H,I,J,L,M,N,O,P,Q,T
**Manual:** 7
**0.25% Pb:** No
**Spare Parts Only:** Yes
**Approved:** 04-Aug-1987
**Renewed:** 04-Aug-2017
**Bypass:** Watts 709QT 3/4" (H)
**Shutoffs:** ee,ff,gg,hh,oo,pp,ccc,ddd,ffff,gggg

**Type:** DCDA
**Manufacturer:** Ames
**Model:** DCDC
**Size:** 10
**Orientation:**
**Meters:**
**Manual:**
**0.25% Pb:** No
**Spare Parts Only:** No
**Approved:**
**Renewed:**
**Bypass:**
**Notes:** model designation changed to 3000GDCDC

---

**Type:** DCDA
**Manufacturer:** Ames
**Model:** LFColt 300BF
**Size:** 2 1/2
**Orientation:** H
**Meters:** (O)
**Manual:** 9
**0.25% Pb:** Yes
**Spare Parts Only:** No
**Approved:** 08-Jan-2014
**Renewed:** 08-Jan-2017
**Bypass:** Watts LF007M3QT 3/4" (H), Ames LF2000BM3 3/4" (H)
**Shutoffs:** (yyy)
**Notes:** Lead free compliant version identified with NSF61 mark on meter

---

**Type:** DCDA
**Manufacturer:** Ames
**Model:** LFColt 300BF
**Size:** 2 1/2
**Orientation:** VU
**Meters:** (O)
**Manual:** 9
**0.25% Pb:** Yes
**Spare Parts Only:** No
**Approved:** 08-Jan-2014
**Renewed:** 08-Jan-2017
**Bypass:** Watts LF007M3QT 3/4" (VU), Ames LF2000BM3 3/4" (VU)
**Shutoffs:** (yyy)
**Notes:** Lead free compliant version identified with NSF61 mark on meter

---

**Type:** DCDA
**Manufacturer:** Ames
**Model:** LFColt 300BF
**Size:** 3
**Orientation:** H
**Meters:** (O)
**Manual:** 9
**0.25% Pb:** Yes
**Spare Parts Only:** No
**Approved:** 08-Jan-2014
**Renewed:** 08-Jan-2017
**Bypass:** Watts LF007M3QT 3/4" (H), Ames LF2000BM3 3/4" (H)
**Shutoffs:** (yyy)
**Notes:** Lead free compliant version identified with NSF61 mark on meter

---

**Type:** DCDA
**Manufacturer:** Ames
**Model:** LFColt 300BF
**Size:** 3
**Orientation:** VU
**Meters:** (O)
**Manual:** 9
**0.25% Pb:** Yes
**Spare Parts Only:** No
**Approved:** 08-Jan-2014
**Renewed:** 08-Jan-2017
**Bypass:** Watts LF007M3QT 3/4" (VU), Ames LF2000BM3 3/4" (VU)
**Shutoffs:** (yyy)
**Notes:** Lead free compliant version identified with NSF61 mark on meter


2018 © University of Southern California

**Type:** DCDA
**Manufacturer:** Ames
**Model:** LFColt 300BF
**Size:** 4
**Orientation:** H
**Meters:** (O)
**Manual:** 9
**0.25% Pb:** Yes
**Spare Parts Only:** No
**Approved:** 08-Jan-2014
**Renewed:** 08-Jan-2017
**Bypass:** Watts LF007M3QT 3/4" (H), Ames LF2000BM3 3/4" (H)
**Shutoffs:** (yyy)
**Notes:** Lead free compliant version identified with NSF61 mark on meter

---

**Type:** DCDA
**Manufacturer:** Ames
**Model:** LFColt 300BF
**Size:** 4
**Orientation:** VU
**Meters:** (O)
**Manual:** 9
**0.25% Pb:** Yes
**Spare Parts Only:** No
**Approved:** 08-Jan-2014
**Renewed:** 08-Jan-2017
**Bypass:** Watts LF007M3QT 3/4" (VU), Ames LF2000BM3 3/4" (VU)
**Shutoffs:** (yyy)
**Notes:** Lead free compliant version identified with NSF61 mark on meter

---

**Type:** DCDA
**Manufacturer:** Ames
**Model:** LFColt 300BF
**Size:** 6
**Orientation:** H
**Meters:** (O)
**Manual:** 9
**0.25% Pb:** Yes
**Spare Parts Only:** No
**Approved:** 08-Jan-2014
**Renewed:** 08-Jan-2017
**Bypass:** Watts LF007M3QT 3/4" (H), Ames LF2000BM3 3/4" (H)
**Shutoffs:** (yyy)
**Notes:** Lead free compliant version identified with NSF61 mark on meter

---

**Type:** DCDA
**Manufacturer:** Ames
**Model:** LFColt 300BF
**Size:** 6
**Orientation:** VU
**Meters:** (O)
**Manual:** 9
**0.25% Pb:** Yes
**Spare Parts Only:** No
**Approved:** 08-Jan-2014
**Renewed:** 08-Jan-2017
**Bypass:** Watts LF007M3QT 3/4" (VU), Ames LF2000BM3 3/4" (VU)
**Shutoffs:** (yyy)
**Notes:** Lead free compliant version identified with NSF61 mark on meter

---

**Type:** DCDA
**Manufacturer:** Ames
**Model:** LFColt 300BF
**Size:** 8
**Orientation:** H
**Meters:** (O)
**Manual:** 9
**0.25% Pb:** Yes
**Spare Parts Only:** No
**Approved:** 08-Jan-2014
**Renewed:** 08-Jan-2017
**Bypass:** Watts LF007M3QT 3/4" (H), Ames LF2000BM3 3/4" (H)
**Shutoffs:** (yyy)
**Notes:** Lead free compliant version identified with NSF61 mark on meter

**Type:** DCDA
**Manufacturer:** Ames
**Model:** LFColt 300BF
**Size:** 8
**Orientation:** VU
**Meters:** (O)
**Manual:** 9
**0.25% Pb:** Yes
**Spare Parts Only:** No
**Approved:** 08-Jan-2014
**Renewed:** 08-Jan-2017
**Bypass:** Watts LF007M3QT 3/4" (VU), Ames LF2000BM3 3/4" (VU)
**Shutoffs:** (yyy)
**Notes:** Lead free compliant version identified with NSF61 mark on meter

---

**Type:** DCDA
**Manufacturer:** Ames
**Model:** LFColt 300BF
**Size:** 10
**Orientation:** H
**Meters:** (O)
**Manual:** 9
**0.25% Pb:** Yes
**Spare Parts Only:** No
**Approved:** 08-Jan-2014
**Renewed:** 08-Jan-2017
**Bypass:** Watts LF007M3QT 3/4" (H), Ames LF2000BM3 3/4" (H)
**Shutoffs:** (yyy)
**Notes:** Lead free compliant version identified with NSF61 mark on meter

---

**Type:** DCDA
**Manufacturer:** Ames
**Model:** LFColt 300BF
**Size:** 10
**Orientation:** VU
**Meters:** (O)
**Manual:** 9
**0.25% Pb:** Yes
**Spare Parts Only:** No
**Approved:** 08-Jan-2014
**Renewed:** 08-Jan-2017
**Bypass:** Watts LF007M3QT 3/4" (VU), Ames LF2000BM3 3/4" (VU)
**Shutoffs:** (yyy)
**Notes:** Lead free compliant version identified with NSF61 mark on meter

---

**Type:** DCDA
**Manufacturer:** Ames
**Model:** LFColt 300GV
**Size:** 2 1/2
**Orientation:** H
**Meters:** (O)
**Manual:** 9
**0.25% Pb:** Yes
**Spare Parts Only:** No
**Approved:** 08-Jan-2014
**Renewed:** 08-Jan-2017
**Bypass:** Watts LF007M3QT 3/4" (H), Ames LF2000BM3 3/4" (H)
**Shutoffs:** (zzz)
**Notes:** Lead free compliant version identified with NSF61 mark on meter

---

**Type:** DCDA
**Manufacturer:** Ames
**Model:** LFColt 300GV
**Size:** 2 1/2
**Orientation:** VU
**Meters:** (O)
**Manual:** 9
**0.25% Pb:** Yes
**Spare Parts Only:** No
**Approved:** 08-Jan-2014
**Renewed:** 08-Jan-2017
**Bypass:** Watts LF007M3QT 3/4" (VU), Ames LF2000BM3 3/4" (VU)
**Shutoffs:** (zzz)
**Notes:** Lead free compliant version identified with NSF61 mark on meter


2018 © University of Southern California

**Type:** DCDA
**Manufacturer:** Ames
**Model:** LFColt 300GV
**Size:** 3
**Orientation:** H
**Meters:** (O)
**Manual:** 9
**0.25% Pb:** Yes
**Spare Parts Only:** No
**Approved:** 08-Jan-2014
**Renewed:** 08-Jan-2017
**Bypass:** Watts LF007M3QT 3/4" (H), Ames LF2000BM3 3/4" (H)
**Shutoffs:** (zzz)
**Notes:** Lead free compliant version identified with NSF61 mark on meter

---

**Type:** DCDA
**Manufacturer:** Ames
**Model:** LFColt 300GV
**Size:** 3
**Orientation:** VU
**Meters:** (O)
**Manual:** 9
**0.25% Pb:** Yes
**Spare Parts Only:** No
**Approved:** 08-Jan-2014
**Renewed:** 08-Jan-2017
**Bypass:** Watts LF007M3QT 3/4" (VU), Ames LF2000BM3 3/4" (VU)
**Shutoffs:** (zzz)
**Notes:** Lead free compliant version identified with NSF61 mark on meter

---

**Type:** DCDA
**Manufacturer:** Ames
**Model:** LFColt 300GV
**Size:** 4
**Orientation:** H
**Meters:** (O)
**Manual:** 9
**0.25% Pb:** Yes
**Spare Parts Only:** No
**Approved:** 08-Jan-2014
**Renewed:** 08-Jan-2017
**Bypass:** Watts LF007M3QT 3/4" (H), Ames LF2000BM3 3/4" (H)
**Shutoffs:** (zzz)
**Notes:** Lead free compliant version identified with NSF61 mark on meter

---

**Type:** DCDA
**Manufacturer:** Ames
**Model:** LFColt 300GV
**Size:** 4
**Orientation:** VU
**Meters:** (O)
**Manual:** 9
**0.25% Pb:** Yes
**Spare Parts Only:** No
**Approved:** 08-Jan-2014
**Renewed:** 08-Jan-2017
**Bypass:** Watts LF007M3QT 3/4" (VU), Ames LF2000BM3 3/4" (VU)
**Shutoffs:** (zzz)
**Notes:** Lead free compliant version identified with NSF61 mark on meter

---

**Type:** DCDA
**Manufacturer:** Ames
**Model:** LFColt 300GV
**Size:** 6
**Orientation:** H
**Meters:** (O)
**Manual:** 9
**0.25% Pb:** Yes
**Spare Parts Only:** No
**Approved:** 08-Jan-2014
**Renewed:** 08-Jan-2017
**Bypass:** Watts LF007M3QT 3/4" (H), Ames LF2000BM3 3/4" (H)
**Shutoffs:** (zzz)
**Notes:** Lead free compliant version identified with NSF61 mark on meter

**Type:** DCDA
**Manufacturer:** Ames
**Model:** LFColt 300GV
**Size:** 6
**Orientation:** VU
**Meters:** (O)
**Manual:** 9
**0.25% Pb:** Yes
**Spare Parts Only:** No
**Approved:** 08-Jan-2014
**Renewed:** 08-Jan-2017
**Bypass:** Watts LF007M3QT 3/4" (VU), Ames LF2000BM3 3/4" (VU)
**Shutoffs:** (zzz)
**Notes:** Lead free compliant version identified with NSF61 mark on meter

---

**Type:** DCDA
**Manufacturer:** Ames
**Model:** LFColt 300GV
**Size:** 8
**Orientation:** H
**Meters:** (O)
**Manual:** 9
**0.25% Pb:** Yes
**Spare Parts Only:** No
**Approved:** 08-Jan-2014
**Renewed:** 08-Jan-2017
**Bypass:** Watts LF007M3QT 3/4" (H), Ames LF2000BM3 3/4" (H)
**Shutoffs:** (zzz)
**Notes:** Lead free compliant version identified with NSF61 mark on meter

---

**Type:** DCDA
**Manufacturer:** Ames
**Model:** LFColt 300GV
**Size:** 8
**Orientation:** VU
**Meters:** (O)
**Manual:** 9
**0.25% Pb:** Yes
**Spare Parts Only:** No
**Approved:** 08-Jan-2014
**Renewed:** 08-Jan-2017
**Bypass:** Watts LF007M3QT 3/4" (VU), Ames LF2000BM3 3/4" (VU)
**Shutoffs:** (zzz)
**Notes:** Lead free compliant version identified with NSF61 mark on meter

---

**Type:** DCDA
**Manufacturer:** Ames
**Model:** LFColt 300GV
**Size:** 10
**Orientation:** H
**Meters:** (O)
**Manual:** 9
**0.25% Pb:** Yes
**Spare Parts Only:** No
**Approved:** 08-Jan-2014
**Renewed:** 08-Jan-2017
**Bypass:** Watts LF007M3QT 3/4" (H), Ames LF2000BM3 3/4" (H)
**Shutoffs:** (zzz)
**Notes:** Lead free compliant version identified with NSF61 mark on meter

---

**Type:** DCDA
**Manufacturer:** Ames
**Model:** LFColt 300GV
**Size:** 10
**Orientation:** VU
**Meters:** (O)
**Manual:** 9
**0.25% Pb:** Yes
**Spare Parts Only:** No
**Approved:** 08-Jan-2014
**Renewed:** 08-Jan-2017
**Bypass:** Watts LF007M3QT 3/4" (VU), Ames LF2000BM3 3/4" (VU)
**Shutoffs:** (zzz)
**Notes:** Lead free compliant version identified with NSF61 mark on meter


2018 © University of Southern California

**Type:** DCDA
**Manufacturer:** Ames
**Model:** LFColt 300NBF
**Size:** 2 1/2
**Orientation:** VUVD
**Meters:** (O)
**Manual:** 9
**0.25% Pb:** Yes
**Spare Parts Only:** No
**Approved:** 08-Jan-2014
**Renewed:** 08-Jan-2017
**Bypass:** Watts LF007M3QT 3/4" (H), Ames LF2000BM3 3/4" (H)
**Shutoffs:** (yyy)
**Notes:** Lead free compliant version identified with NSF61 mark on meter

---

**Type:** DCDA
**Manufacturer:** Ames
**Model:** LFColt 300NBF
**Size:** 3
**Orientation:** VUVD
**Meters:** (O)
**Manual:** 9
**0.25% Pb:** Yes
**Spare Parts Only:** No
**Approved:** 08-Jan-2014
**Renewed:** 08-Jan-2017
**Bypass:** Watts LF007M3QT 3/4" (H), Ames LF2000BM3 3/4" (H)
**Shutoffs:** (yyy)
**Notes:** Lead free compliant version identified with NSF61 mark on meter

---

**Type:** DCDA
**Manufacturer:** Ames
**Model:** LFColt 300NBF
**Size:** 4
**Orientation:** VUVD
**Meters:** (O)
**Manual:** 9
**0.25% Pb:** Yes
**Spare Parts Only:** No
**Approved:** 08-Jan-2014
**Renewed:** 08-Jan-2017
**Bypass:** Watts LF007M3QT 3/4" (H), Ames LF2000BM3 3/4" (H)
**Shutoffs:** (yyy)
**Notes:** Lead free compliant version identified with NSF61 mark on meter

---

**Type:** DCDA
**Manufacturer:** Ames
**Model:** LFColt 300NBF
**Size:** 6
**Orientation:** VUVD
**Meters:** (O)
**Manual:** 9
**0.25% Pb:** Yes
**Spare Parts Only:** No
**Approved:** 08-Jan-2014
**Renewed:** 08-Jan-2017
**Bypass:** Watts LF007M3QT 3/4" (H), Ames LF2000BM3 3/4" (H)
**Shutoffs:** (yyy)
**Notes:** Lead free compliant version identified with NSF61 mark on meter

---

**Type:** DCDA
**Manufacturer:** Ames
**Model:** LFColt 300NBF
**Size:** 8
**Orientation:** VUVD
**Meters:** (O)
**Manual:** 9
**0.25% Pb:** Yes
**Spare Parts Only:** No
**Approved:** 08-Jan-2014
**Renewed:** 08-Jan-2017
**Bypass:** Watts LF007M3QT 3/4" (H), Ames LF2000BM3 3/4" (H)
**Shutoffs:** (yyy)
**Notes:** Lead free compliant version identified with NSF61 mark on meter

**Type:** DCDA
**Manufacturer:** Ames
**Model:** LFColt 300NBF
**Size:** 10
**Orientation:** VUVD
**Meters:** (O)
**Manual:** 9
**0.25% Pb:** Yes
**Spare Parts Only:** No
**Approved:** 08-Jan-2014
**Renewed:** 08-Jan-2017
**Bypass:** Watts LF007M3QT 3/4" (H), Ames LF2000BM3 3/4" (H)
**Shutoffs:** (yyy)
**Notes:** Lead free compliant version identified with NSF61 mark on meter

---

**Type:** DCDA
**Manufacturer:** Ames
**Model:** LFColt 300NGV
**Size:** 2 1/2
**Orientation:** VUVD
**Meters:** (O)
**Manual:** 9
**0.25% Pb:** Yes
**Spare Parts Only:** No
**Approved:** 08-Jan-2014
**Renewed:** 08-Jan-2017
**Bypass:** Watts LF007M3QT 3/4" (H), Ames LF2000BM3 3/4" (H)
**Shutoffs:** (zzz)
**Notes:** Lead free compliant version identified with NSF61 mark on meter

---

**Type:** DCDA
**Manufacturer:** Ames
**Model:** LFColt 300NGV
**Size:** 3
**Orientation:** VUVD
**Meters:** (O)
**Manual:** 9
**0.25% Pb:** Yes
**Spare Parts Only:** No
**Approved:** 08-Jan-2014
**Renewed:** 08-Jan-2017
**Bypass:** Watts LF007M3QT 3/4" (H), Ames LF2000BM3 3/4" (H)
**Shutoffs:** (zzz)
**Notes:** Lead free compliant version identified with NSF61 mark on meter

---

**Type:** DCDA
**Manufacturer:** Ames
**Model:** LFColt 300NGV
**Size:** 4
**Orientation:** VUVD
**Meters:** (O)
**Manual:** 9
**0.25% Pb:** Yes
**Spare Parts Only:** No
**Approved:** 08-Jan-2014
**Renewed:** 08-Jan-2017
**Bypass:** Watts LF007M3QT 3/4" (H), Ames LF2000BM3 3/4" (H)
**Shutoffs:** (zzz)
**Notes:** Lead free compliant version identified with NSF61 mark on meter

---

**Type:** DCDA
**Manufacturer:** Ames
**Model:** LFColt 300NGV
**Size:** 6
**Orientation:** VUVD
**Meters:** (O)
**Manual:** 9
**0.25% Pb:** Yes
**Spare Parts Only:** No
**Approved:** 08-Jan-2014
**Renewed:** 08-Jan-2017
**Bypass:** Watts LF007M3QT 3/4" (H), Ames LF2000BM3 3/4" (H)
**Shutoffs:** (zzz)
**Notes:** Lead free compliant version identified with NSF61 mark on meter


2018 © University of Southern California

**Type:** DCDA
**Size:** 8
**Manual:** 9
**Approved:** 08-Jan-2014
**Manufacturer:** Ames
**Orientation:** VUVD
**0.25% Pb:** Yes
**Renewed:** 08-Jan-2017
**Model:** LFColt 300NGV
**Meters:** (O)
**Spare Parts Only:** No
**Bypass:** Watts LF007M3QT 3/4" (H), Ames LF2000BM3 3/4" (H)
**Shutoffs:** (zzz)
**Notes:** Lead free compliant version identified with NSF61 mark on meter

---

**Type:** DCDA
**Size:** 10
**Manual:** 9
**Approved:** 08-Jan-2014
**Manufacturer:** Ames
**Orientation:** VUVD
**0.25% Pb:** Yes
**Renewed:** 08-Jan-2017
**Model:** LFColt 300NGV
**Meters:** (O)
**Spare Parts Only:** No
**Bypass:** Watts LF007M3QT 3/4" (H), Ames LF2000BM3 3/4" (H)
**Shutoffs:** (zzz)
**Notes:** Lead free compliant version identified with NSF61 mark on meter

---

**Type:** DCDA
**Size:** 2 1/2
**Manual:** 9
**Approved:** 08-Jan-2014
**Manufacturer:** Ames
**Orientation:** H
**0.25% Pb:** Yes
**Renewed:** 08-Jan-2017
**Model:** LFMaxim 300BF
**Meters:** (O)
**Spare Parts Only:** No
**Bypass:** Watts LF007M3QT 3/4" (H), Ames LF2000BM3 3/4" (H)
**Shutoffs:** (yyy)
**Notes:** Lead free compliant version identified with NSF61 mark on meter

---

**Type:** DCDA
**Size:** 2 1/2
**Manual:** 9
**Approved:** 08-Jan-2014
**Manufacturer:** Ames
**Orientation:** VU
**0.25% Pb:** Yes
**Renewed:** 08-Jan-2017
**Model:** LFMaxim 300BF
**Meters:** (O)
**Spare Parts Only:** No
**Bypass:** Watts LF007M3QT 3/4" (VU), Ames LF2000BM3 3/4" (VU)
**Shutoffs:** (yyy)
**Notes:** Lead free compliant version identified with NSF61 mark on meter

---

**Type:** DCDA
**Size:** 3
**Manual:** 9
**Approved:** 08-Jan-2014
**Manufacturer:** Ames
**Orientation:** H
**0.25% Pb:** Yes
**Renewed:** 08-Jan-2017
**Model:** LFMaxim 300BF
**Meters:** (O)
**Spare Parts Only:** No
**Bypass:** Watts LF007M3QT 3/4" (H), Ames LF2000BM3 3/4" (H)
**Shutoffs:** (yyy)
**Notes:** Lead free compliant version identified with NSF61 mark on meter

**Type:** DCDA
**Manufacturer:** Ames
**Model:** LFMaxim 300BF
**Size:** 3
**Orientation:** VU
**Meters:** (O)
**Manual:** 9
**0.25% Pb:** Yes
**Spare Parts Only:** No
**Approved:** 08-Jan-2014
**Renewed:** 08-Jan-2017
**Bypass:** Watts LF007M3QT 3/4" (VU), Ames LF2000BM3 3/4" (VU)
**Shutoffs:** (yyy)
**Notes:** Lead free compliant version identified with NSF61 mark on meter

---

**Type:** DCDA
**Manufacturer:** Ames
**Model:** LFMaxim 300BF
**Size:** 4
**Orientation:** H
**Meters:** (O)
**Manual:** 9
**0.25% Pb:** Yes
**Spare Parts Only:** No
**Approved:** 08-Jan-2014
**Renewed:** 08-Jan-2017
**Bypass:** Watts LF007M3QT 3/4" (H), Ames LF2000BM3 3/4" (H)
**Shutoffs:** (yyy)
**Notes:** Lead free compliant version identified with NSF61 mark on meter

---

**Type:** DCDA
**Manufacturer:** Ames
**Model:** LFMaxim 300BF
**Size:** 4
**Orientation:** VU
**Meters:** (O)
**Manual:** 9
**0.25% Pb:** Yes
**Spare Parts Only:** No
**Approved:** 08-Jan-2014
**Renewed:** 08-Jan-2017
**Bypass:** Watts LF007M3QT 3/4" (VU), Ames LF2000BM3 3/4" (VU)
**Shutoffs:** (yyy)
**Notes:** Lead free compliant version identified with NSF61 mark on meter

---

**Type:** DCDA
**Manufacturer:** Ames
**Model:** LFMaxim 300BF
**Size:** 6
**Orientation:** H
**Meters:** (O)
**Manual:** 9
**0.25% Pb:** Yes
**Spare Parts Only:** No
**Approved:** 08-Jan-2014
**Renewed:** 08-Jan-2017
**Bypass:** Watts LF007M3QT 3/4" (H), Ames LF2000BM3 3/4" (H)
**Shutoffs:** (yyy)
**Notes:** Lead free compliant version identified with NSF61 mark on meter

---

**Type:** DCDA
**Manufacturer:** Ames
**Model:** LFMaxim 300BF
**Size:** 6
**Orientation:** VU
**Meters:** (O)
**Manual:** 9
**0.25% Pb:** Yes
**Spare Parts Only:** No
**Approved:** 08-Jan-2014
**Renewed:** 08-Jan-2017
**Bypass:** Watts LF007M3QT 3/4" (VU), Ames LF2000BM3 3/4" (VU)
**Shutoffs:** (yyy)
**Notes:** Lead free compliant version identified with NSF61 mark on meter


2018 © University of Southern California

**Type:** DCDA
**Manufacturer:** Ames
**Model:** LFMaxim 300BF
**Size:** 8
**Orientation:** H
**Meters:** (O)
**Manual:** 9
**0.25% Pb:** Yes
**Spare Parts Only:** No
**Approved:** 08-Jan-2014
**Renewed:** 08-Jan-2017
**Bypass:** Watts LF007M3QT 3/4" (H), Ames LF2000BM3 3/4" (H)
**Shutoffs:** (yyy)
**Notes:** Lead free compliant version identified with NSF61 mark on meter

---

**Type:** DCDA
**Manufacturer:** Ames
**Model:** LFMaxim 300BF
**Size:** 8
**Orientation:** VU
**Meters:** (O)
**Manual:** 9
**0.25% Pb:** Yes
**Spare Parts Only:** No
**Approved:** 08-Jan-2014
**Renewed:** 08-Jan-2017
**Bypass:** Watts LF007M3QT 3/4" (VU), Ames LF2000BM3 3/4" (VU)
**Shutoffs:** (yyy)
**Notes:** Lead free compliant version identified with NSF61 mark on meter

---

**Type:** DCDA
**Manufacturer:** Ames
**Model:** LFMaxim 300BF
**Size:** 10
**Orientation:** H
**Meters:** (O)
**Manual:** 9
**0.25% Pb:** Yes
**Spare Parts Only:** No
**Approved:** 08-Jan-2014
**Renewed:** 08-Jan-2017
**Bypass:** Watts LF007M3QT 3/4" (H), Ames LF2000BM3 3/4" (H)
**Shutoffs:** (yyy)
**Notes:** Lead free compliant version identified with NSF61 mark on meter

---

**Type:** DCDA
**Manufacturer:** Ames
**Model:** LFMaxim 300BF
**Size:** 10
**Orientation:** VU
**Meters:** (O)
**Manual:** 9
**0.25% Pb:** Yes
**Spare Parts Only:** No
**Approved:** 08-Jan-2014
**Renewed:** 08-Jan-2017
**Bypass:** Watts LF007M3QT 3/4" (VU), Ames LF2000BM3 3/4" (VU)
**Shutoffs:** (yyy)
**Notes:** Lead free compliant version identified with NSF61 mark on meter

---

**Type:** DCDA
**Manufacturer:** Ames
**Model:** LFMaxim 300GV
**Size:** 2 1/2
**Orientation:** H
**Meters:** (O)
**Manual:** 9
**0.25% Pb:** Yes
**Spare Parts Only:** No
**Approved:** 08-Jan-2014
**Renewed:** 08-Jan-2017
**Bypass:** Watts LF007M3QT 3/4" (H), Ames LF2000BM3 3/4" (H)
**Shutoffs:** (zzz)
**Notes:** Lead free compliant version identified with NSF61 mark on meter

**Type:** DCDA
**Manufacturer:** Ames
**Model:** LFMaxim 300GV
**Size:** 2 1/2
**Orientation:** VU
**Meters:** (O)
**Manual:** 9
**0.25% Pb:** Yes
**Spare Parts Only:** No
**Approved:** 08-Jan-2014
**Renewed:** 08-Jan-2017
**Bypass:** Watts LF007M3QT 3/4" (VU), Ames LF2000BM3 3/4" (VU)
**Shutoffs:** (zzz)
**Notes:** Lead free compliant version identified with NSF61 mark on meter

---

**Type:** DCDA
**Manufacturer:** Ames
**Model:** LFMaxim 300GV
**Size:** 3
**Orientation:** H
**Meters:** (O)
**Manual:** 9
**0.25% Pb:** Yes
**Spare Parts Only:** No
**Approved:** 08-Jan-2014
**Renewed:** 08-Jan-2017
**Bypass:** Watts LF007M3QT 3/4" (H), Ames LF2000BM3 3/4" (H)
**Shutoffs:** (zzz)
**Notes:** Lead free compliant version identified with NSF61 mark on meter

---

**Type:** DCDA
**Manufacturer:** Ames
**Model:** LFMaxim 300GV
**Size:** 3
**Orientation:** VU
**Meters:** (O)
**Manual:** 9
**0.25% Pb:** Yes
**Spare Parts Only:** No
**Approved:** 08-Jan-2014
**Renewed:** 08-Jan-2017
**Bypass:** Watts LF007M3QT 3/4" (VU), Ames LF2000BM3 3/4" (VU)
**Shutoffs:** (zzz)
**Notes:** Lead free compliant version identified with NSF61 mark on meter

---

**Type:** DCDA
**Manufacturer:** Ames
**Model:** LFMaxim 300GV
**Size:** 4
**Orientation:** H
**Meters:** (O)
**Manual:** 9
**0.25% Pb:** Yes
**Spare Parts Only:** No
**Approved:** 08-Jan-2014
**Renewed:** 08-Jan-2017
**Bypass:** Watts LF007M3QT 3/4" (H), Ames LF2000BM3 3/4" (H)
**Shutoffs:** (zzz)
**Notes:** Lead free compliant version identified with NSF61 mark on meter

---

**Type:** DCDA
**Manufacturer:** Ames
**Model:** LFMaxim 300GV
**Size:** 4
**Orientation:** VU
**Meters:** (O)
**Manual:** 9
**0.25% Pb:** Yes
**Spare Parts Only:** No
**Approved:** 08-Jan-2014
**Renewed:** 08-Jan-2017
**Bypass:** Watts LF007M3QT 3/4" (VU), Ames LF2000BM3 3/4" (VU)
**Shutoffs:** (zzz)
**Notes:** Lead free compliant version identified with NSF61 mark on meter


2018 © University of Southern California

**Type:** DCDA
**Manufacturer:** Ames
**Model:** LFMaxim 300GV
**Size:** 6
**Orientation:** H
**Meters:** (O)
**Manual:** 9
**0.25% Pb:** Yes
**Spare Parts Only:** No
**Approved:** 08-Jan-2014
**Renewed:** 08-Jan-2017
**Bypass:** Watts LF007M3QT 3/4" (H), Ames LF2000BM3 3/4" (H)
**Shutoffs:** (zzz)
**Notes:** Lead free compliant version identified with NSF61 mark on meter

---

**Type:** DCDA
**Manufacturer:** Ames
**Model:** LFMaxim 300GV
**Size:** 6
**Orientation:** VU
**Meters:** (O)
**Manual:** 9
**0.25% Pb:** Yes
**Spare Parts Only:** No
**Approved:** 08-Jan-2014
**Renewed:** 08-Jan-2017
**Bypass:** Watts LF007M3QT 3/4" (VU), Ames LF2000BM3 3/4" (VU)
**Shutoffs:** (zzz)
**Notes:** Lead free compliant version identified with NSF61 mark on meter

---

**Type:** DCDA
**Manufacturer:** Ames
**Model:** LFMaxim 300GV
**Size:** 8
**Orientation:** H
**Meters:** (O)
**Manual:** 9
**0.25% Pb:** Yes
**Spare Parts Only:** No
**Approved:** 08-Jan-2014
**Renewed:** 08-Jan-2017
**Bypass:** Watts LF007M3QT 3/4" (H), Ames LF2000BM3 3/4" (H)
**Shutoffs:** (zzz)
**Notes:** Lead free compliant version identified with NSF61 mark on meter

---

**Type:** DCDA
**Manufacturer:** Ames
**Model:** LFMaxim 300GV
**Size:** 8
**Orientation:** VU
**Meters:** (O)
**Manual:** 9
**0.25% Pb:** Yes
**Spare Parts Only:** No
**Approved:** 08-Jan-2014
**Renewed:** 08-Jan-2017
**Bypass:** Watts LF007M3QT 3/4" (VU), Ames LF2000BM3 3/4" (VU)
**Shutoffs:** (zzz)
**Notes:** Lead free compliant version identified with NSF61 mark on meter

---

**Type:** DCDA
**Manufacturer:** Ames
**Model:** LFMaxim 300GV
**Size:** 10
**Orientation:** H
**Meters:** (O)
**Manual:** 9
**0.25% Pb:** Yes
**Spare Parts Only:** No
**Approved:** 08-Jan-2014
**Renewed:** 08-Jan-2017
**Bypass:** Watts LF007M3QT 3/4" (H), Ames LF2000BM3 3/4" (H)
**Shutoffs:** (zzz)
**Notes:** Lead free compliant version identified with NSF61 mark on meter

**Type:** DCDA
**Manufacturer:** Ames
**Model:** LFMaxim 300GV
**Size:** 10
**Orientation:** VU
**Meters:** (O)
**Manual:** 9
**0.25% Pb:** Yes
**Spare Parts Only:** No
**Approved:** 08-Jan-2014
**Renewed:** 08-Jan-2017
**Bypass:** Watts LF007M3QT 3/4" (VU), Ames LF2000BM3 3/4" (VU)
**Shutoffs:** (zzz)
**Notes:** Lead free compliant version identified with NSF61 mark on meter

---

**Type:** DCDA
**Manufacturer:** Ames
**Model:** LFMaxim 300NBF
**Size:** 2 1/2
**Orientation:** VUVD
**Meters:** (O)
**Manual:** 9
**0.25% Pb:** Yes
**Spare Parts Only:** No
**Approved:** 08-Jan-2014
**Renewed:** 08-Jan-2017
**Bypass:** Watts LF007M3QT 3/4" (H), Ames LF2000BM3 3/4" (H)
**Shutoffs:** (yyy)
**Notes:** Lead free compliant version identified with NSF61 mark on meter

---

**Type:** DCDA
**Manufacturer:** Ames
**Model:** LFMaxim 300NBF
**Size:** 3
**Orientation:** VUVD
**Meters:** (O)
**Manual:** 9
**0.25% Pb:** Yes
**Spare Parts Only:** No
**Approved:** 08-Jan-2014
**Renewed:** 08-Jan-2017
**Bypass:** Watts LF007M3QT 3/4" (H), Ames LF2000BM3 3/4" (H)
**Shutoffs:** (yyy)
**Notes:** Lead free compliant version identified with NSF61 mark on meter

---

**Type:** DCDA
**Manufacturer:** Ames
**Model:** LFMaxim 300NBF
**Size:** 4
**Orientation:** VUVD
**Meters:** (O)
**Manual:** 9
**0.25% Pb:** Yes
**Spare Parts Only:** No
**Approved:** 08-Jan-2014
**Renewed:** 08-Jan-2017
**Bypass:** Watts LF007M3QT 3/4" (H), Ames LF2000BM3 3/4" (H)
**Shutoffs:** (yyy)
**Notes:** Lead free compliant version identified with NSF61 mark on meter

---

**Type:** DCDA
**Manufacturer:** Ames
**Model:** LFMaxim 300NBF
**Size:** 6
**Orientation:** VUVD
**Meters:** (O)
**Manual:** 9
**0.25% Pb:** Yes
**Spare Parts Only:** No
**Approved:** 08-Jan-2014
**Renewed:** 08-Jan-2017
**Bypass:** Watts LF007M3QT 3/4" (H), Ames LF2000BM3 3/4" (H)
**Shutoffs:** (yyy)
**Notes:** Lead free compliant version identified with NSF61 mark on meter


2018 © University of Southern California

**Type:** DCDA
**Manufacturer:** Ames
**Model:** LFMaxim 300NBF
**Size:** 8
**Orientation:** VUVD
**Meters:** (O)
**Manual:** 9
**0.25% Pb:** Yes
**Spare Parts Only:** No
**Approved:** 08-Jan-2014
**Renewed:** 08-Jan-2017
**Bypass:** Watts LF007M3QT 3/4" (H), Ames LF2000BM3 3/4" (H)
**Shutoffs:** (yyy)
**Notes:** Lead free compliant version identified with NSF61 mark on meter

---

**Type:** DCDA
**Manufacturer:** Ames
**Model:** LFMaxim 300NBF
**Size:** 10
**Orientation:** VUVD
**Meters:** (O)
**Manual:** 9
**0.25% Pb:** Yes
**Spare Parts Only:** No
**Approved:** 08-Jan-2014
**Renewed:** 08-Jan-2017
**Bypass:** Watts LF007M3QT 3/4" (H), Ames LF2000BM3 3/4" (H)
**Shutoffs:** (yyy)
**Notes:** Lead free compliant version identified with NSF61 mark on meter

---

**Type:** DCDA
**Manufacturer:** Ames
**Model:** LFMaxim 300NGV
**Size:** 2 1/2
**Orientation:** VUVD
**Meters:** (O)
**Manual:** 9
**0.25% Pb:** Yes
**Spare Parts Only:** No
**Approved:** 08-Jan-2014
**Renewed:** 08-Jan-2017
**Bypass:** Watts LF007M3QT 3/4" (H), Ames LF2000BM3 3/4" (H)
**Shutoffs:** (zzz)
**Notes:** Lead free compliant version identified with NSF61 mark on meter

---

**Type:** DCDA
**Manufacturer:** Ames
**Model:** LFMaxim 300NGV
**Size:** 3
**Orientation:** VUVD
**Meters:** (O)
**Manual:** 9
**0.25% Pb:** Yes
**Spare Parts Only:** No
**Approved:** 08-Jan-2014
**Renewed:** 08-Jan-2017
**Bypass:** Watts LF007M3QT 3/4" (H), Ames LF2000BM3 3/4" (H)
**Shutoffs:** (zzz)
**Notes:** Lead free compliant version identified with NSF61 mark on meter

---

**Type:** DCDA
**Manufacturer:** Ames
**Model:** LFMaxim 300NGV
**Size:** 4
**Orientation:** VUVD
**Meters:** (O)
**Manual:** 9
**0.25% Pb:** Yes
**Spare Parts Only:** No
**Approved:** 08-Jan-2014
**Renewed:** 08-Jan-2017
**Bypass:** Watts LF007M3QT 3/4" (H), Ames LF2000BM3 3/4" (H)
**Shutoffs:** (zzz)
**Notes:** Lead free compliant version identified with NSF61 mark on meter

**Type:** DCDA
**Size:** 6
**Manual:** 9
**Approved:** 08-Jan-2014
**Manufacturer:** Ames
**Orientation:** VUVD
**0.25% Pb:** Yes
**Renewed:** 08-Jan-2017
**Model:** LFMaxim 300NGV
**Meters:** (O)
**Spare Parts Only:** No
**Bypass:** Watts LF007M3QT 3/4" (H), Ames LF2000BM3 3/4" (H)
**Shutoffs:** (zzz)
**Notes:** Lead free compliant version identified with NSF61 mark on meter

---

**Type:** DCDA
**Size:** 8
**Manual:** 9
**Approved:** 08-Jan-2014
**Manufacturer:** Ames
**Orientation:** VUVD
**0.25% Pb:** Yes
**Renewed:** 08-Jan-2017
**Model:** LFMaxim 300NGV
**Meters:** (O)
**Spare Parts Only:** No
**Bypass:** Watts LF007M3QT 3/4" (H), Ames LF2000BM3 3/4" (H)
**Shutoffs:** (zzz)
**Notes:** Lead free compliant version identified with NSF61 mark on meter

---

**Type:** DCDA
**Size:** 10
**Manual:** 9
**Approved:** 08-Jan-2014
**Manufacturer:** Ames
**Orientation:** VUVD
**0.25% Pb:** Yes
**Renewed:** 08-Jan-2017
**Model:** LFMaxim 300NGV
**Meters:** (O)
**Spare Parts Only:** No
**Bypass:** Watts LF007M3QT 3/4" (H), Ames LF2000BM3 3/4" (H)
**Shutoffs:** (zzz)
**Notes:** Lead free compliant version identified with NSF61 mark on meter

---

**Type:** DCDA
**Size:** 2 1/2
**Manual:** 9
**Approved:** 06-Nov-2003
**Shutoffs:** (yyy)
**Manufacturer:** Ames
**Orientation:** H
**0.25% Pb:** No
**Renewed:** 06-Nov-2015
**Model:** Maxim 300aBF
**Meters:** (N),G,H,I,J,K,L,M,O,P,Q,T
**Spare Parts Only:** No
**Bypass:** Ames 2000BM3 3/4" (H)

---

**Type:** DCDA
**Size:** 2 1/2
**Manual:** 9
**Approved:** 06-Nov-2003
**Shutoffs:** (yyy)
**Manufacturer:** Ames
**Orientation:** VU
**0.25% Pb:** No
**Renewed:** 06-Nov-2015
**Model:** Maxim 300aBF
**Meters:** (N),G,H,I,J,K,L,M,O,P,Q,T
**Spare Parts Only:** No
**Bypass:** Ames 2000BM3 3/4" (VU)

---

**Type:** DCDA
**Size:** 3
**Manual:** 9
**Approved:** 06-Oct-2003
**Shutoffs:** (yyy)
**Manufacturer:** Ames
**Orientation:** H
**0.25% Pb:** No
**Renewed:** 06-Oct-2018
**Model:** Maxim 300aBF
**Meters:** (N),G,H,I,J,K,L,M,O,P,Q,T
**Spare Parts Only:** No
**Bypass:** Ames 2000BM3 3/4" (H)


2018 © University of Southern California

**Type:** DCDA
**Size:** 3
**Manual:** 9
**Approved:** 06-Oct-2003
**Shutoffs:** (yyy)
**Manufacturer:** Ames
**Orientation:** VU
**0.25% Pb:** No
**Renewed:** 06-Oct-2018
**Model:** Maxim 300aBF
**Meters:** (N),G,H,I,J,K,L,M,O,P,Q,T
**Spare Parts Only:** No
**Bypass:** Ames 2000BM3 3/4" (VU)

---

**Type:** DCDA
**Size:** 4
**Manual:** 9
**Approved:** 03-Nov-2004
**Shutoffs:** (yyy)
**Manufacturer:** Ames
**Orientation:** H
**0.25% Pb:** No
**Renewed:** 03-Nov-2016
**Model:** Maxim 300aBF
**Meters:** (N),G,H,I,J,K,L,M,O,P,Q,T
**Spare Parts Only:** No
**Bypass:** Ames 2000BM3 3/4 (H)

---

**Type:** DCDA
**Size:** 4
**Manual:** 9
**Approved:** 18-Jan-2005
**Shutoffs:** (yyy)
**Manufacturer:** Ames
**Orientation:** VU
**0.25% Pb:** No
**Renewed:** 18-Jan-2017
**Model:** Maxim 300aBF
**Meters:** (N),G,H,I,J,K,L,M,O,P,Q,T
**Spare Parts Only:** No
**Bypass:** Ames 2000BM3 3/4" (VU)

---

**Type:** DCDA
**Size:** 2 1/2
**Manual:** 9
**Approved:** 06-Oct-2003
**Shutoffs:** (zzz)
**Manufacturer:** Ames
**Orientation:** H
**0.25% Pb:** No
**Renewed:** 06-Oct-2018
**Model:** Maxim 300aGV
**Meters:** (N),G,H,I,J,K,L,M,O,P,Q,T
**Spare Parts Only:** No
**Bypass:** Ames 2000BM3 3/4" (H)

---

**Type:** DCDA
**Size:** 2 1/2
**Manual:** 9
**Approved:** 06-Oct-2003
**Shutoffs:** (zzz)
**Manufacturer:** Ames
**Orientation:** VU
**0.25% Pb:** No
**Renewed:** 06-Oct-2018
**Model:** Maxim 300aGV
**Meters:** (N),G,H,I,J,K,L,M,O,P,Q,T
**Spare Parts Only:** No
**Bypass:** Ames 2000BM3 3/4" (VU)

---

**Type:** DCDA
**Size:** 3
**Manual:** 9
**Approved:** 06-Oct-2003
**Shutoffs:** (zzz)
**Manufacturer:** Ames
**Orientation:** H
**0.25% Pb:** No
**Renewed:** 06-Oct-2018
**Model:** Maxim 300aGV
**Meters:** (N),G,H,I,J,K,L,M,O,P,Q,T
**Spare Parts Only:** No
**Bypass:** Ames 2000BM3 3/4" (H)

---

**Type:** DCDA
**Size:** 3
**Manual:** 9
**Approved:** 06-Oct-2003
**Shutoffs:** (zzz)
**Manufacturer:** Ames
**Orientation:** VU
**0.25% Pb:** No
**Renewed:** 06-Oct-2018
**Model:** Maxim 300aGV
**Meters:** (N),G,H,I,J,K,L,M,O,P,Q,T
**Spare Parts Only:** No
**Bypass:** Ames 2000BM3 3/4" (VU)

**Type:** DCDA
**Size:** 4
**Manual:** 9
**Approved:** 03-Nov-2004
**Shutoffs:** (zzz)
**Manufacturer:** Ames
**Orientation:** H
**0.25% Pb:** No
**Renewed:** 03-Nov-2016
**Model:** Maxim 300aGV
**Meters:** (N),G,H,I,J,K,L,M,O,P,Q,T
**Spare Parts Only:** No
**Bypass:** Ames 2000BM3 3/4 (H)

---

**Type:** DCDA
**Size:** 4
**Manual:** 9
**Approved:** 18-Jan-2005
**Shutoffs:** (zzz)
**Manufacturer:** Ames
**Orientation:** VU
**0.25% Pb:** No
**Renewed:** 18-Jan-2017
**Model:** Maxim 300aGV
**Meters:** (N),G,H,I,J,K,L,M,O,P,Q,T
**Spare Parts Only:** No
**Bypass:** Ames 2000BM3 3/4" (VU)

---

**Type:** DCDA
**Size:** 2 1/2
**Manual:** 9
**Approved:** 04-Oct-2005
**Shutoffs:** (yyy)
**Manufacturer:** Ames
**Orientation:** H
**0.25% Pb:** No
**Renewed:** 04-Oct-2017
**Model:** Maxim 300BF
**Meters:** (N),G,H,I,J,K,L,M,O,P,Q,T
**Spare Parts Only:** No
**Bypass:** Ames 2000BM3 3/4" (H)

---

**Type:** DCDA
**Size:** 2 1/2
**Manual:** 9
**Approved:** 04-Oct-2005
**Shutoffs:** (yyy)
**Manufacturer:** Ames
**Orientation:** VU
**0.25% Pb:** No
**Renewed:** 04-Oct-2017
**Model:** Maxim 300BF
**Meters:** (N),G,H,I,J,K,L,M,O,P,Q,T
**Spare Parts Only:** No
**Bypass:** Ames 2000BM3 3/4" (VU)

---

**Type:** DCDA
**Size:** 3
**Manual:** 9
**Approved:** 04-Oct-2005
**Shutoffs:** (yyy)
**Manufacturer:** Ames
**Orientation:** H
**0.25% Pb:** No
**Renewed:** 04-Oct-2017
**Model:** Maxim 300BF
**Meters:** (N),G,H,I,J,K,L,M,O,P,Q,T
**Spare Parts Only:** No
**Bypass:** Ames 2000BM3 3/4" (H)

---

**Type:** DCDA
**Size:** 3
**Manual:** 9
**Approved:** 04-Oct-2005
**Shutoffs:** (yyy)
**Manufacturer:** Ames
**Orientation:** VU
**0.25% Pb:** No
**Renewed:** 04-Oct-2017
**Model:** Maxim 300BF
**Meters:** (N),G,H,I,J,K,L,M,O,P,Q,T
**Spare Parts Only:** No
**Bypass:** Ames 2000BM3 3/4" (VU)

---

**Type:** DCDA
**Size:** 4
**Manual:** 9
**Approved:** 02-Mar-2007
**Shutoffs:** (yyy)
**Manufacturer:** Ames
**Orientation:** H
**0.25% Pb:** No
**Renewed:** 02-Mar-2016
**Model:** Maxim 300BF
**Meters:** (N),G,H,I,J,K,L,M,O,P,Q,T
**Spare Parts Only:** No
**Bypass:** Ames 2000BM3 3/4"(H)


2018 © University of Southern California

**Type:** DCDA
**Size:** 4
**Manual:** 9
**Approved:** 02-Mar-2007
**Shutoffs:** (yyy)

**Manufacturer:** Ames
**Orientation:** Vu
**0.25% Pb:** No
**Renewed:** 02-Mar-2016

**Model:** Maxim 300BF
**Meters:** (N),G,H,I,J,K,L,M,O,P,Q,T
**Spare Parts Only:** No
**Bypass:** Ames 2000BM3 3/4"(V)

---

**Type:** DCDA
**Size:** 6
**Manual:** 9
**Approved:** 09-Mar-2007
**Shutoffs:** (yyy)

**Manufacturer:** Ames
**Orientation:** H
**0.25% Pb:** No
**Renewed:** 09-Mar-2016

**Model:** Maxim 300BF
**Meters:** (N),G,H,I,J,K,L,M,O,P,Q,T
**Spare Parts Only:** No
**Bypass:** Ames 2000BM3 3/4" (H & VU)

---

**Type:** DCDA
**Size:** 6
**Manual:** 9
**Approved:** 09-Mar-2007
**Shutoffs:** (yyy)

**Manufacturer:** Ames
**Orientation:** VU
**0.25% Pb:** No
**Renewed:** 09-Mar-2016

**Model:** Maxim 300BF
**Meters:** (N),G,H,I,J,K,L,M,O,P,Q,T
**Spare Parts Only:** No
**Bypass:** Ames 2000BM3 3/4" (H & VU)

---

**Type:** DCDA
**Size:** 8
**Manual:** 9
**Approved:** 17-Sep-2009
**Shutoffs:** (yyy)

**Manufacturer:** Ames
**Orientation:** H
**0.25% Pb:** No
**Renewed:** 17-Sep-2018

**Model:** Maxim 300BF
**Meters:** (N),G,H,I,J,K,L,M,O,P,Q,T
**Spare Parts Only:** No
**Bypass:** Watts 007M3QT 3/4" (H), Ames 2000 BM3 (H)

---

**Type:** DCDA
**Size:** 8
**Manual:** 9
**Approved:** 17-Sep-2009
**Shutoffs:** (yyy)

**Manufacturer:** Ames
**Orientation:** VU
**0.25% Pb:** No
**Renewed:** 17-Sep-2018

**Model:** Maxim 300BF
**Meters:** (N),G,H,I,J,K,L,M,O,P,Q,T
**Spare Parts Only:** No
**Bypass:** Watts 007M3QT 3/4" (V), Ames 2000 BM3 (V)

---

**Type:** DCDA
**Size:** 10
**Manual:** 9
**Approved:** 17-Sep-2009
**Shutoffs:** (yyy)

**Manufacturer:** Ames
**Orientation:** H
**0.25% Pb:** No
**Renewed:** 17-Sep-2018

**Model:** Maxim 300BF
**Meters:** (N),G,H,I,J,K,L,M,O,P,Q,T
**Spare Parts Only:** No
**Bypass:** Watts 007M3QT 3/4" (H), Ames 2000 BM3 (H)

**Type:** DCDA
**Size:** 10
**Manual:** 9
**Approved:** 17-Sep-2009
**Shutoffs:** (yyy)

**Manufacturer:** Ames
**Orientation:** VU
**0.25% Pb:** No
**Renewed:** 17-Sep-2018

**Model:** Maxim 300BF
**Meters:** (N),G,H,I,J,K,L,M,O,P,Q,T
**Spare Parts Only:** No
**Bypass:** Watts 007M3QT 3/4" (V), Ames 2000 BM3 (V)

---

**Type:** DCDA
**Size:** 2 1/2
**Manual:** 9
**Approved:** 04-Oct-2005
**Shutoffs:** (zzz)

**Manufacturer:** Ames
**Orientation:** H
**0.25% Pb:** No
**Renewed:** 04-Oct-2017

**Model:** Maxim 300GV
**Meters:** (N),G,H,I,J,K,L,M,O,P,Q,T
**Spare Parts Only:** No
**Bypass:** Ames 2000BM3 3/4" (H)

---

**Type:** DCDA
**Size:** 2 1/2
**Manual:** 9
**Approved:** 04-Oct-2005
**Shutoffs:** (zzz)

**Manufacturer:** Ames
**Orientation:** VU
**0.25% Pb:** No
**Renewed:** 04-Oct-2017

**Model:** Maxim 300GV
**Meters:** (N),G,H,I,J,K,L,M,O,P,Q,T
**Spare Parts Only:** No
**Bypass:** Ames 2000BM3 3/4" (VU)

---

**Type:** DCDA
**Size:** 3
**Manual:** 9
**Approved:** 04-Oct-2005
**Shutoffs:** (zzz)

**Manufacturer:** Ames
**Orientation:** H
**0.25% Pb:** No
**Renewed:** 04-Oct-2017

**Model:** Maxim 300GV
**Meters:** (N),G,H,I,J,K,L,M,O,P,Q,T
**Spare Parts Only:** No
**Bypass:** Ames 2000BM3 3/4" (H)

---

**Type:** DCDA
**Size:** 3
**Manual:** 9
**Approved:** 04-Oct-2005
**Shutoffs:** (zzz)

**Manufacturer:** Ames
**Orientation:** VU
**0.25% Pb:** No
**Renewed:** 04-Oct-2017

**Model:** Maxim 300GV
**Meters:** (N),G,H,I,J,K,L,M,O,P,Q,T
**Spare Parts Only:** No
**Bypass:** Ames 2000BM3 3/4" (VU)

---

**Type:** DCDA
**Size:** 4
**Manual:** 9
**Approved:** 02-Mar-2007
**Shutoffs:** (zzz)

**Manufacturer:** Ames
**Orientation:** H
**0.25% Pb:** No
**Renewed:** 02-Mar-2016

**Model:** Maxim 300GV
**Meters:** (N),G,H,I,J,K,L,M,O,P,Q,T
**Spare Parts Only:** No
**Bypass:** Ames 2000BM3 3/4"(H)


2018 © University of Southern California

**Type:** DCDA
**Size:** 4
**Manual:** 9
**Approved:** 02-Mar-2007
**Shutoffs:** (zzz)
**Manufacturer:** Ames
**Orientation:** VU
**0.25% Pb:** No
**Renewed:** 02-Mar-2016
**Model:** Maxim 300GV
**Meters:** (N),G,H,I,J,K,L,M,O,P,Q,T
**Spare Parts Only:** No
**Bypass:** Ames 2000BM3 3/4"(V)

---

**Type:** DCDA
**Size:** 6
**Manual:** 9
**Approved:** 09-Mar-2007
**Shutoffs:** (zzz)
**Manufacturer:** Ames
**Orientation:** H
**0.25% Pb:** No
**Renewed:** 09-Mar-2016
**Model:** Maxim 300GV
**Meters:** (N),G,H,I,J,K,L,M,O,P,Q,T
**Spare Parts Only:** No
**Bypass:** Ames 2000BM3 3/4" (H & VU)

---

**Type:** DCDA
**Size:** 6
**Manual:** 9
**Approved:** 09-Mar-2007
**Shutoffs:** (zzz)
**Manufacturer:** Ames
**Orientation:** VU
**0.25% Pb:** No
**Renewed:** 09-Mar-2016
**Model:** Maxim 300GV
**Meters:** (N),G,H,I,J,K,L,M,O,P,Q,T
**Spare Parts Only:** No
**Bypass:** Ames 2000BM3 3/4" (H & VU)

---

**Type:** DCDA
**Size:** 8
**Manual:** 9
**Approved:** 17-Sep-2009
**Shutoffs:** (zzz)
**Manufacturer:** Ames
**Orientation:** H
**0.25% Pb:** No
**Renewed:** 17-Sep-2018
**Model:** Maxim 300GV
**Meters:** (N),G,H,I,J,K,L,M,O,P,Q,T
**Spare Parts Only:** No
**Bypass:** Watts 007M3QT 3/4" (H), Ames 2000 BM3 (H)

---

**Type:** DCDA
**Size:** 8
**Manual:** 9
**Approved:** 17-Sep-2009
**Shutoffs:** (zzz)
**Manufacturer:** Ames
**Orientation:** VU
**0.25% Pb:** No
**Renewed:** 17-Sep-2018
**Model:** Maxim 300GV
**Meters:** (N),G,H,I,J,K,L,M,O,P,Q,T
**Spare Parts Only:** No
**Bypass:** Watts 007M3QT 3/4" (V), Ames 2000 BM3 (V)

---

**Type:** DCDA
**Size:** 10
**Manual:** 9
**Approved:** 17-Sep-2009
**Shutoffs:** (zzz)
**Manufacturer:** Ames
**Orientation:** H
**0.25% Pb:** No
**Renewed:** 17-Sep-2018
**Model:** Maxim 300GV
**Meters:** (N),G,H,I,J,K,L,M,O,P,Q,T
**Spare Parts Only:** No
**Bypass:** Watts 007M3QT 3/4" (H), Ames 2000 BM3 (H)

**Type:** DCDA
**Size:** 10
**Manual:** 9
**Approved:** 17-Sep-2009
**Shutoffs:** (zzz)

**Manufacturer:** Ames
**Orientation:** VU
**0.25% Pb:** No
**Renewed:** 17-Sep-2018

**Model:** Maxim 300GV
**Meters:** (N),G,H,I,J,K,L,M,O,P,Q,T
**Spare Parts Only:** No
**Bypass:** Watts 007M3QT 3/4" (V), Ames 2000 BM3 (V)

---

**Type:** DCDA
**Size:** 2 1/2
**Manual:** 9
**Approved:** 07-Apr-2009
**Shutoffs:** (yyy)

**Manufacturer:** Ames
**Orientation:** VUVD
**0.25% Pb:** No
**Renewed:** 07-Apr-2018

**Model:** Maxim 300NBF
**Meters:** (N),G,H,I,J,K,L,M,O,P,Q,T
**Spare Parts Only:** No
**Bypass:** Ames 2000BM3 3/4" (H)

---

**Type:** DCDA
**Size:** 3
**Manual:** 9
**Approved:** 07-Apr-2009
**Shutoffs:** (yyy)

**Manufacturer:** Ames
**Orientation:** VUVD
**0.25% Pb:** No
**Renewed:** 07-Apr-2018

**Model:** Maxim 300NBF
**Meters:** (N),G,H,I,J,K,L,M,O,P,Q,T
**Spare Parts Only:** No
**Bypass:** Ames 2000BM3 3/4" (H)

---

**Type:** DCDA
**Size:** 4
**Manual:** 9
**Approved:** 07-Apr-2009
**Shutoffs:** (yyy)

**Manufacturer:** Ames
**Orientation:** VUVD
**0.25% Pb:** No
**Renewed:** 07-Apr-2018

**Model:** Maxim 300NBF
**Meters:** (N),G,H,I,J,K,L,M,O,P,Q,T
**Spare Parts Only:** No
**Bypass:** Ames 2000BM3 3/4" (H)

---

**Type:** DCDA
**Size:** 6
**Manual:** 9
**Approved:** 03-Jan-2013
**Shutoffs:** (yyy)

**Manufacturer:** Ames
**Orientation:** VUVD
**0.25% Pb:** No
**Renewed:** 03-Jan-2016

**Model:** Maxim 300NBF
**Meters:** (N),G,H,I,J,K,L,M,O,P,Q,T
**Spare Parts Only:** No
**Bypass:** Ames 2000BM3 3/4" (H)

---

**Type:** DCDA
**Size:** 8
**Manual:** 9
**Approved:** 28-May-2013
**Shutoffs:** (yyy)

**Manufacturer:** Ames
**Orientation:** VUVD
**0.25% Pb:** No
**Renewed:** 28-May-2016

**Model:** Maxim 300NBF
**Meters:** (N), H,I,J,K,L,M,N,O,P,Q
**Spare Parts Only:** No
**Bypass:** Ames 2000BM3 3/4" (H), Watts 007M3QT 3/4" (H)


2018 © University of Southern California

**Type:** DCDA
**Size:** 10
**Manual:** 9
**Approved:** 28-May-2013
**Shutoffs:** (yyy)

**Manufacturer:** Ames
**Orientation:** VUVD
**0.25% Pb:** No
**Renewed:** 28-May-2016

**Model:** Maxim 300NBF
**Meters:** (N), H,I,J,K,L,M,N,O,P,Q
**Spare Parts Only:** No
**Bypass:** Ames 2000BM3 3/4" (H), Watts 007M3QT 3/4" (H)

---

**Type:** DCDA
**Size:** 2 1/2
**Manual:** 9
**Approved:** 07-Apr-2009
**Shutoffs:** (zzz)

**Manufacturer:** Ames
**Orientation:** VUVD
**0.25% Pb:** No
**Renewed:** 07-Apr-2018

**Model:** Maxim 300NGV
**Meters:** (N),G,H,I,J,K,L,M,N,O,P,Q,T
**Spare Parts Only:** No
**Bypass:** Ames 2000BM3 3/4" (H)

---

**Type:** DCDA
**Size:** 3
**Manual:** 9
**Approved:** 07-Apr-2009
**Shutoffs:** (zzz)

**Manufacturer:** Ames
**Orientation:** VUVD
**0.25% Pb:** No
**Renewed:** 07-Apr-2018

**Model:** Maxim 300NGV
**Meters:** (N),G,H,I,J,K,L,M,N,O,P,Q,T
**Spare Parts Only:** No
**Bypass:** Ames 2000BM3 3/4" (H)

---

**Type:** DCDA
**Size:** 4
**Manual:** 9
**Approved:** 07-Apr-2009
**Shutoffs:** (zzz)

**Manufacturer:** Ames
**Orientation:** VUVD
**0.25% Pb:** No
**Renewed:** 07-Apr-2018

**Model:** Maxim 300NGV
**Meters:** (N),G,H,I,J,K,L,M,N,O,P,Q,T
**Spare Parts Only:** No
**Bypass:** Ames 2000BM3 3/4" (H)

---

**Type:** DCDA
**Size:** 6
**Manual:** 9
**Approved:** 03-Jan-2013
**Shutoffs:** (zzz)

**Manufacturer:** Ames
**Orientation:** VUVD
**0.25% Pb:** No
**Renewed:** 03-Jan-2016

**Model:** Maxim 300NGV
**Meters:** (N),G,H,I,J,K,L,M,N,O,P,Q,T
**Spare Parts Only:** No
**Bypass:** Ames 2000BM3 3/4" (H)

---

**Type:** DCDA
**Size:** 8
**Manual:** 9
**Approved:** 28-May-2013
**Shutoffs:** (zzz)

**Manufacturer:** Ames
**Orientation:** VUVD
**0.25% Pb:** No
**Renewed:** 28-May-2016

**Model:** Maxim 300NGV
**Meters:** (N), H,I,J,K,L,M,N,O,P,Q
**Spare Parts Only:** No
**Bypass:** Ames 2000BM3 3/4" (H), Watts 007M3QT 3/4" (H)

**Type:** DCDA
**Size:** 10
**Manual:** 9
**Approved:** 28-May-2013
**Shutoffs:** (zzz)

**Manufacturer:** Ames
**Orientation:** VUVD
**0.25% Pb:** No
**Renewed:** 28-May-2016

**Model:** Maxim 300NGV
**Meters:** (N), H,I,J,K,L,M,N,O,P,Q
**Spare Parts Only:** No
**Bypass:** Ames 2000BM3 3/4" (H), Watts 007M3QT 3/4" (H)

---

**Type:** DCDA
**Size:** 10
**Manual:**
**Approved:**
**Notes:** model designation changed to DCDA4S

**Manufacturer:** Apollo/Conbraco
**Orientation:**
**0.25% Pb:** No
**Renewed:**

**Model:** 10DCDA
**Meters:**
**Spare Parts Only:** No
**Bypass:**

---

**Type:** DCDA
**Size:** 10
**Manual:**
**Approved:**
**Notes:** model designation changed to DCDA4S

**Manufacturer:** Apollo/Conbraco
**Orientation:**
**0.25% Pb:** No
**Renewed:**

**Model:** 10DCDA
**Meters:**
**Spare Parts Only:** No
**Bypass:**

---

**Type:** DCDA
**Size:** 2 1/2
**Manual:** 9
**Approved:** 16-Oct-2000
**Shutoffs:** (ll),mm

**Manufacturer:** Apollo/Conbraco
**Orientation:** H
**0.25% Pb:** No
**Renewed:** 16-Oct-2018

**Model:** 2 1/2DCDA
**Meters:** (M),E,F,G,H,I,J,K,L,N,O,P,Q,T
**Spare Parts Only:** Yes
**Bypass:** Apollo/Conbraco 1/2DC 1/2" (H), Apollo/Conbraco W432100 1/2" (H)

---

**Type:** DCDA
**Size:** 2 1/2
**Manual:** 9
**Approved:** 16-Oct-2000
**Shutoffs:** (ll),mm

**Manufacturer:** Apollo/Conbraco
**Orientation:** VU
**0.25% Pb:** No
**Renewed:** 16-Oct-2018

**Model:** 2 1/2DCDA
**Meters:** (M),E,F,G,H,I,J,K,L,N,O,P,Q,T
**Spare Parts Only:** Yes
**Bypass:** Apollo/Conbraco 1/2DC 1/2" (VU), Apollo/Conbraco W432100 1/2" (VU)

---

**Type:** DCDA
**Size:** 2 1/2
**Manual:** 9
**Approved:** 10-Apr-2001
**Shutoffs:** (mm)[#1SOV],(nnn)[#2SOV]

**Manufacturer:** Apollo/Conbraco
**Orientation:** H
**0.25% Pb:** No
**Renewed:** 10-Apr-2016

**Model:** 2 1/2DCDA6
**Meters:** (M),E,F,G,H,I,J,K,L,N,O,P,Q,T
**Spare Parts Only:** Yes
**Bypass:** Apollo/Conbraco 1/2DC 1/2" (H), Apollo/Conbraco W432100 1/2" (H)


2018 © University of Southern California

**Type:** DCDA
**Manufacturer:** Apollo/Conbraco
**Model:** 2 1/2DCDA6
**Size:** 2 1/2
**Orientation:** VU
**Meters:** (M),E,F,G,H,I,J,K,L,N,O,P,Q,T
**Manual:** 9
**0.25% Pb:** No
**Spare Parts Only:** Yes
**Approved:** 10-Apr-2001
**Renewed:** 10-Apr-2016
**Bypass:** Apollo/Conbraco 1/2DC 1/2" (VU), Apollo/Conbraco W432100 1/2" (VU)
**Shutoffs:** (mm)[#1SOV],(nnn)[#2SOV]

---

**Type:** DCDA
**Manufacturer:** Apollo/Conbraco
**Model:** 2 1/2DCDA7
**Size:** 2 1/2
**Orientation:** H
**Meters:** (M),E,F,G,H,I,J,K,L,N,O,P,Q,T
**Manual:** 9
**0.25% Pb:** No
**Spare Parts Only:** Yes
**Approved:** 29-Sep-2004
**Renewed:** 29-Sep-2016
**Bypass:** Apollo/Conbraco 1/2DC 1/2" (H), Apollo/Conbraco W432100 1/2" (H)
**Shutoffs:** (mm)[#1SOV], (qqq)[#2SOV]

---

**Type:** DCDA
**Manufacturer:** Apollo/Conbraco
**Model:** 2 1/2DCDA7
**Size:** 2 1/2
**Orientation:** VU
**Meters:** (M),E,F,G,H,I,J,K,L,N,O,P,Q,T
**Manual:** 9
**0.25% Pb:** No
**Spare Parts Only:** Yes
**Approved:** 29-Sep-2004
**Renewed:** 29-Sep-2016
**Bypass:** Apollo/Conbraco 1/2DC 1/2" (VU), Apollo/Conbraco W432100 1/2" (VU)
**Shutoffs:** (mm)[#1SOV], (qqq)[#2SOV]

---

**Type:** DCDA
**Manufacturer:** Apollo/Conbraco
**Model:** 2 1/2DCDA8
**Size:** 2 1/2
**Orientation:** H
**Meters:** (M),E,F,G,H,I,J,K,L,N,O,P,Q,T
**Manual:** 9
**0.25% Pb:** No
**Spare Parts Only:** Yes
**Approved:** 29-Sep-2004
**Renewed:** 29-Sep-2016
**Bypass:** Apollo/Conbraco 1/2DC 1/2" (H), Apollo/Conbraco W432100 1/2" (H)
**Shutoffs:** (ppp),qqq

---

**Type:** DCDA
**Manufacturer:** Apollo/Conbraco
**Model:** 2 1/2DCDA8
**Size:** 2 1/2
**Orientation:** VU
**Meters:** (M),E,F,G,H,I,J,K,L,N,O,P,Q,T
**Manual:** 9
**0.25% Pb:** No
**Spare Parts Only:** Yes
**Approved:** 29-Sep-2004
**Renewed:** 29-Sep-2016
**Bypass:** Apollo/Conbraco 1/2DC 1/2" (VU), Apollo/Conbraco W432100 1/2" (VU)
**Shutoffs:** (ppp),qqq

**Type:** DCDA
**Size:** 2 1/2
**Manual:** 9
**Approved:** 10-Apr-2001
**Shutoffs:** (ll),mm

**Manufacturer:** Apollo/Conbraco
**Orientation:** VUVD
**0.25% Pb:** No
**Renewed:** 10-Apr-2016

**Model:** 2 1/2DCDAU
**Meters:** (M),E,F,G,H,I,J,K,L,N,O,P,Q,T
**Spare Parts Only:** Yes
**Bypass:** Apollo/Conbraco 1/2DC 1/2" (H), Apollo/Conbraco W432100 1/2" (H)

---

**Type:** DCDA
**Size:** 3
**Manual:** 9
**Approved:** 16-Oct-2000
**Shutoffs:** (ll),mm

**Manufacturer:** Apollo/Conbraco
**Orientation:** H
**0.25% Pb:** No
**Renewed:** 16-Oct-2018

**Model:** 3DCDA
**Meters:** (M),E,F,G,H,I,J,K,L,N,O,P,Q,T
**Spare Parts Only:** Yes
**Bypass:** Apollo/Conbraco 1/2DC 1/2" (H), Apollo/Conbraco W432100 1/2" (H)

---

**Type:** DCDA
**Size:** 3
**Manual:** 9
**Approved:** 16-Oct-2000
**Shutoffs:** (ll),mm

**Manufacturer:** Apollo/Conbraco
**Orientation:** VU
**0.25% Pb:** No
**Renewed:** 16-Oct-2018

**Model:** 3DCDA
**Meters:** (M),E,F,G,H,I,J,K,L,N,O,P,Q,T
**Spare Parts Only:** Yes
**Bypass:** Apollo/Conbraco 1/2DC 1/2" (VU), Apollo/Conbraco W432100 1/2" (VU)

---

**Type:** DCDA
**Size:** 3
**Manual:** 9
**Approved:** 10-Apr-2001
**Shutoffs:** (mm)[#1SOV],(nnn)[#2SOV]

**Manufacturer:** Apollo/Conbraco
**Orientation:** H
**0.25% Pb:** No
**Renewed:** 10-Apr-2016

**Model:** 3DCDA6
**Meters:** (M),E,F,G,H,I,J,K,L,N,O,P,Q,T
**Spare Parts Only:** Yes
**Bypass:** Apollo/Conbraco 1/2DC 1/2" (H), Apollo/Conbraco W432100 1/2" (H)

---

**Type:** DCDA
**Size:** 3
**Manual:** 9
**Approved:** 10-Apr-2001
**Shutoffs:** (mm)[#1SOV],(nnn)[#2SOV]

**Manufacturer:** Apollo/Conbraco
**Orientation:** VU
**0.25% Pb:** No
**Renewed:** 10-Apr-2016

**Model:** 3DCDA6
**Meters:** (M),E,F,G,H,I,J,K,L,N,O,P,Q,T
**Spare Parts Only:** Yes
**Bypass:** Apollo/Conbraco 1/2DC 1/2" (VU), Apollo/Conbraco W432100 1/2" (VU)


2018 © University of Southern California

**Type:** DCDA
**Manufacturer:** Apollo/Conbraco
**Model:** 3DCDA7
**Size:** 3
**Orientation:** H
**Meters:** (M),E,F,G,H,I,J,K,L,N,O,P,Q,T
**Manual:** 9
**0.25% Pb:** No
**Spare Parts Only:** Yes
**Approved:** 29-Sep-2004
**Renewed:** 29-Sep-2016
**Bypass:** Apollo/Conbraco 1/2DC 1/2" (H), Apollo/Conbraco W432100 1/2" (H)
**Shutoffs:** (mm)[#1SOV], (qqq)[#2SOV]

---

**Type:** DCDA
**Manufacturer:** Apollo/Conbraco
**Model:** 3DCDA7
**Size:** 3
**Orientation:** VU
**Meters:** (M),E,F,G,H,I,J,K,L,N,O,P,Q,T
**Manual:** 9
**0.25% Pb:** No
**Spare Parts Only:** Yes
**Approved:** 29-Sep-2004
**Renewed:** 29-Sep-2016
**Bypass:** Apollo/Conbraco 1/2DC 1/2" (VU), Apollo/Conbraco W432100 1/2" (VU)
**Shutoffs:** (mm)[#1SOV], (qqq)[#2SOV]

---

**Type:** DCDA
**Manufacturer:** Apollo/Conbraco
**Model:** 3DCDA8
**Size:** 3
**Orientation:** H
**Meters:** (M),E,F,G,H,I,J,K,L,N,O,P,Q,T
**Manual:** 9
**0.25% Pb:** No
**Spare Parts Only:** Yes
**Approved:** 29-Sep-2004
**Renewed:** 29-Sep-2016
**Bypass:** Apollo/Conbraco 1/2DC 1/2" (H), Apollo/Conbraco W432100 1/2" (H)
**Shutoffs:** (ppp),qqq

---

**Type:** DCDA
**Manufacturer:** Apollo/Conbraco
**Model:** 3DCDA8
**Size:** 3
**Orientation:** VU
**Meters:** (M),E,F,G,H,I,J,K,L,N,O,P,Q,T
**Manual:** 9
**0.25% Pb:** No
**Spare Parts Only:** Yes
**Approved:** 29-Sep-2004
**Renewed:** 29-Sep-2016
**Bypass:** Apollo/Conbraco 1/2DC 1/2" (VU), Apollo/Conbraco W432100 1/2" (VU)
**Shutoffs:** (ppp),qqq

---

**Type:** DCDA
**Manufacturer:** Apollo/Conbraco
**Model:** 3DCDAU
**Size:** 3
**Orientation:** VUVD
**Meters:** (M),E,F,G,H,I,J,K,L,N,O,P,Q,T
**Manual:** 9
**0.25% Pb:** No
**Spare Parts Only:** Yes
**Approved:** 10-Apr-2001
**Renewed:** 10-Apr-2016
**Bypass:** Apollo/Conbraco 1/2DC 1/2" (H), Apollo/Conbraco W432100 1/2" (H)
**Shutoffs:** (ll),mm

**Type:** DCDA
**Manufacturer:** Apollo/Conbraco
**Model:** 40600000
**Size:** 3
**Orientation:** H
**Meters:** (M),A,B,C,D,E,F,G,H,I,J,K,L,N,O,P,Q,T
**Manual:** 8
**0.25% Pb:** No
**Spare Parts Only:** Yes
**Approved:** 20-Aug-1996
**Renewed:** 20-Aug-2017
**Bypass:** Apollo/Conbraco 4010402 3/4" (H)
**Shutoffs:** uu,cc,mm
**Notes:** formerly 4060003

---

**Type:** DCDA
**Manufacturer:** Apollo/Conbraco
**Model:** 4060003
**Size:** 3
**Orientation:**
**Meters:**
**Manual:**
**0.25% Pb:** No
**Spare Parts Only:** No
**Approved:**
**Renewed:**
**Bypass:**
**Notes:** model designation changed to 40600000

---

**Type:** DCDA
**Manufacturer:** Apollo/Conbraco
**Model:** 4060003
**Size:** 3
**Orientation:**
**Meters:**
**Manual:**
**0.25% Pb:** No
**Spare Parts Only:** No
**Approved:**
**Renewed:**
**Bypass:**
**Notes:** model designation changed to 40600C3

---

**Type:** DCDA
**Manufacturer:** Apollo/Conbraco
**Model:** 40600C3
**Size:** 3
**Orientation:** H
**Meters:** (M),A,B,C,D,E,F,G,H,I,J,K,L,N,O,P,Q,T
**Manual:** 8
**0.25% Pb:** No
**Spare Parts Only:** Yes
**Approved:** 20-Aug-1996
**Renewed:** 20-Aug-2017
**Bypass:** Apollo/Conbraco 4010402 3/4" (H)
**Shutoffs:** uu,cc,mm
**Notes:** formerly 4060003

---

**Type:** DCDA
**Manufacturer:** Apollo/Conbraco
**Model:** 4060A03
**Size:** 4
**Orientation:**
**Meters:**
**Manual:**
**0.25% Pb:** No
**Spare Parts Only:** No
**Approved:**
**Renewed:**
**Bypass:**
**Notes:** model designation changed to 4060AC3

---

**Type:** DCDA
**Manufacturer:** Apollo/Conbraco
**Model:** 4060A03
**Size:** 4
**Orientation:**
**Meters:**
**Manual:**
**0.25% Pb:** No
**Spare Parts Only:** No
**Approved:**
**Renewed:**
**Bypass:**
**Notes:** model designation changed to 4060AE3


2018 © University of Southern California

**Type:** DCDA
**Manufacturer:** Apollo/Conbraco
**Model:** 4060AC3
**Size:** 4
**Orientation:** H
**Meters:** (M),A,B,C,D,E,F,G,H,I,J,K,L,N,O,P,Q,T
**Manual:** 8
**0.25% Pb:** No
**Spare Parts Only:** Yes
**Approved:** 13-Apr-1993
**Renewed:** 13-Apr-2017
**Bypass:** Apollo/Conbraco 4010402 3/4" (H)
**Shutoffs:** uu,cc,mm
**Notes:** formerly 4060A03

---

**Type:** DCDA
**Manufacturer:** Apollo/Conbraco
**Model:** 4060AC6
**Size:** 4
**Orientation:** H
**Meters:** (M),A,B,C,D,E,F,G,H,I,J,K,L,N,O,P,Q,T
**Manual:** 8
**0.25% Pb:** No
**Spare Parts Only:** Yes
**Approved:** 01-Feb-2000
**Renewed:** 01-Feb-2018
**Bypass:** Apollo/Conbraco 4010402 3/4" (H)
**Shutoffs:** mm[#1SOV], nnn[#2SOV]

---

**Type:** DCDA
**Manufacturer:** Apollo/Conbraco
**Model:** 4060AE3
**Size:** 4
**Orientation:** H
**Meters:** (M),A,B,C,D,E,F,G,H,I,J,K,L,N,O,P,Q,T
**Manual:** 8
**0.25% Pb:** No
**Spare Parts Only:** Yes
**Approved:** 13-Apr-1993
**Renewed:** 13-Apr-2017
**Bypass:** Apollo/Conbraco 4010402 3/4" (H)
**Shutoffs:** uu,cc,mm
**Notes:** formerly 4060A03

---

**Type:** DCDA
**Manufacturer:** Apollo/Conbraco
**Model:** 4060AE6
**Size:** 4
**Orientation:** H
**Meters:** (M),A,B,C,D,E,F,G,H,I,J,K,L,N,O,P,Q,T
**Manual:** 8
**0.25% Pb:** No
**Spare Parts Only:** Yes
**Approved:** 01-Feb-2000
**Renewed:** 01-Feb-2018
**Bypass:** Apollo/Conbraco 4010402 3/4" (H)
**Shutoffs:** mm[#1SOV], nnn[#2SOV]

---

**Type:** DCDA
**Manufacturer:** Apollo/Conbraco
**Model:** 4060C03
**Size:** 6
**Orientation:**
**Meters:**
**Manual:**
**0.25% Pb:** No
**Spare Parts Only:** No
**Approved:**
**Renewed:**
**Bypass:**
**Notes:** model designation changed to 4060CC3

**Type:** DCDA
**Manufacturer:** Apollo/Conbraco
**Model:** 4060C03
**Size:** 6
**Orientation:**
**Meters:**
**Manual:**
**0.25% Pb:** No
**Spare Parts Only:** No
**Approved:**
**Renewed:**
**Bypass:**
**Notes:** model designation changed to 4060CE3

---

**Type:** DCDA
**Manufacturer:** Apollo/Conbraco
**Model:** 4060CC3
**Size:** 6
**Orientation:** H
**Meters:** (M),A,B,C,D,E,F,G,H,I,J,K,L,N,O,P,Q,T
**Manual:** 8
**0.25% Pb:** No
**Spare Parts Only:** Yes
**Approved:** 02-Jun-1993
**Renewed:** 02-Jun-2017
**Bypass:** Apollo/Conbraco 4010402 3/4" (H)
**Shutoffs:** uu,cc,mm
**Notes:** formerly 4060C03

---

**Type:** DCDA
**Manufacturer:** Apollo/Conbraco
**Model:** 4060CC6
**Size:** 6
**Orientation:** H
**Meters:** (M),A,B,C,D,E,F,G,H,I,J,K,L,N,O,P,Q,T
**Manual:** 8
**0.25% Pb:** No
**Spare Parts Only:** Yes
**Approved:** 01-Feb-2000
**Renewed:** 01-Feb-2018
**Bypass:** Apollo/Conbraco 4010402 3/4" (H)
**Shutoffs:** mm[#1SOV], nnn[#2SOV]

---

**Type:** DCDA
**Manufacturer:** Apollo/Conbraco
**Model:** 4060CE3
**Size:** 6
**Orientation:** H
**Meters:** (M),A,B,C,D,E,F,G,H,I,J,K,L,N,O,P,Q,T
**Manual:** 8
**0.25% Pb:** No
**Spare Parts Only:** Yes
**Approved:** 02-Jun-1993
**Renewed:** 02-Jun-2017
**Bypass:** Apollo/Conbraco 4010402 3/4" (H)
**Shutoffs:** uu,cc,mm
**Notes:** formerly 4060C03

---

**Type:** DCDA
**Manufacturer:** Apollo/Conbraco
**Model:** 4060CE6
**Size:** 6
**Orientation:** H
**Meters:** (M),A,B,C,D,E,F,G,H,I,J,K,L,N,O,P,Q,T
**Manual:** 8
**0.25% Pb:** No
**Spare Parts Only:** Yes
**Approved:** 01-Feb-2000
**Renewed:** 01-Feb-2018
**Bypass:** Apollo/Conbraco 4010402 3/4" (H)
**Shutoffs:** mm[#1SOV], nnn[#2SOV]


2018 © University of Southern California

**Type:** DCDA
**Manufacturer:** Apollo/Conbraco
**Model:** 4060E03
**Size:** 8
**Orientation:**
**Meters:**
**Manual:**
**0.25% Pb:** No
**Spare Parts Only:** No
**Approved:**
**Renewed:**
**Bypass:**
**Notes:** model designation changed to 4060EC3

---

**Type:** DCDA
**Manufacturer:** Apollo/Conbraco
**Model:** 4060E03
**Size:** 8
**Orientation:**
**Meters:**
**Manual:**
**0.25% Pb:** No
**Spare Parts Only:** No
**Approved:**
**Renewed:**
**Bypass:**
**Notes:** model designation changed to 4060EE3

---

**Type:** DCDA
**Manufacturer:** Apollo/Conbraco
**Model:** 4060EC3
**Size:** 8
**Orientation:** H
**Meters:** (M),A,B,C,D,E,F,G,H,I,J,K,L,N,O,P,Q,T
**Manual:** 8
**0.25% Pb:** No
**Spare Parts Only:** Yes
**Approved:** 13-Apr-1993
**Renewed:** 13-Apr-2017
**Bypass:** Apollo/Conbraco 4010402 3/4" (H)
**Shutoffs:** uu,cc,mm
**Notes:** formerly 4060E03

---

**Type:** DCDA
**Manufacturer:** Apollo/Conbraco
**Model:** 4060EC6
**Size:** 8
**Orientation:** H
**Meters:** (M),A,B,C,D,E,F,G,H,I,J,K,L,N,O,P,Q,T
**Manual:** 8
**0.25% Pb:** No
**Spare Parts Only:** Yes
**Approved:** 01-Feb-2000
**Renewed:** 01-Feb-2018
**Bypass:** Apollo/Conbraco 4010402 3/4" (H)
**Shutoffs:** mm[#1SOV], nnn[#2SOV]

---

**Type:** DCDA
**Manufacturer:** Apollo/Conbraco
**Model:** 4060EE3
**Size:** 8
**Orientation:** H
**Meters:** (M),A,B,C,D,E,F,G,H,I,J,K,L,N,O,P,Q,T
**Manual:** 8
**0.25% Pb:** No
**Spare Parts Only:** Yes
**Approved:** 13-Apr-1993
**Renewed:** 13-Apr-2017
**Bypass:** Apollo/Conbraco 4010402 3/4" (H)
**Shutoffs:** uu,cc,mm
**Notes:** formerly 4060E03

**Type:** DCDA
**Manufacturer:** Apollo/Conbraco
**Model:** 4060EE6
**Size:** 8
**Orientation:** H
**Meters:** (M),A,B,C,D,E,F,G,H,I,J,K,L,N,O,P,Q,T
**Manual:** 8
**0.25% Pb:** No
**Spare Parts Only:** Yes
**Approved:** 01-Feb-2000
**Renewed:** 01-Feb-2018
**Bypass:** Apollo/Conbraco 4010402 3/4" (H)
**Shutoffs:** mm[#1SOV], nnn[#2SOV]

---

**Type:** DCDA
**Manufacturer:** Apollo/Conbraco
**Model:** 4060G03
**Size:** 10
**Orientation:**
**Meters:**
**Manual:**
**0.25% Pb:** No
**Spare Parts Only:** No
**Approved:**
**Renewed:**
**Bypass:**
**Notes:** model designation changed to 4060GC3

---

**Type:** DCDA
**Manufacturer:** Apollo/Conbraco
**Model:** 4060G03
**Size:** 10
**Orientation:**
**Meters:**
**Manual:**
**0.25% Pb:** No
**Spare Parts Only:** No
**Approved:**
**Renewed:**
**Bypass:**
**Notes:** model designation changed to 4060GE3

---

**Type:** DCDA
**Manufacturer:** Apollo/Conbraco
**Model:** 4060GC3
**Size:** 10
**Orientation:** H
**Meters:** (M),A,B,C,D,E,F,G,H,I,J,K,L,N,O,P,Q,T
**Manual:** 8
**0.25% Pb:** No
**Spare Parts Only:** Yes
**Approved:** 13-Apr-1993
**Renewed:** 13-Apr-2017
**Bypass:** Apollo/Conbraco 4010402 3/4" (H)
**Shutoffs:** uu,cc,mm
**Notes:** formerly 4060G03

---

**Type:** DCDA
**Manufacturer:** Apollo/Conbraco
**Model:** 4060GC6
**Size:** 10
**Orientation:** H
**Meters:** (M),A,B,C,D,E,F,G,H,I,J,K,L,N,O,P,Q,T
**Manual:** 8
**0.25% Pb:** No
**Spare Parts Only:** Yes
**Approved:** 01-Feb-2000
**Renewed:** 01-Feb-2018
**Bypass:** Apollo/Conbraco 4010402 3/4" (H)
**Shutoffs:** mm[#1SOV], nnn[#2SOV]


2018 © University of Southern California

**Type:** DCDA
**Manufacturer:** Apollo/Conbraco
**Model:** 4060GE3
**Size:** 10
**Orientation:** H
**Meters:** (M),A,B,C,D,E,F,G,H,I,J,K,L,N,O,P,Q,T
**Manual:** 8
**0.25% Pb:** No
**Spare Parts Only:** Yes
**Approved:** 12-Apr-1993
**Renewed:** 13-Mar-2017
**Bypass:** Apollo/Conbraco 4010402 3/4" (H)
**Shutoffs:** uu,cc,mm
**Notes:** formerly 4060G03

---

**Type:** DCDA
**Manufacturer:** Apollo/Conbraco
**Model:** 4060GE6
**Size:** 10
**Orientation:** H
**Meters:** (M),A,B,C,D,E,F,G,H,I,J,K,L,N,O,P,Q,T
**Manual:** 8
**0.25% Pb:** No
**Spare Parts Only:** Yes
**Approved:** 01-Feb-2000
**Renewed:** 01-Feb-2018
**Bypass:** Apollo/Conbraco 4010402 3/4" (H)
**Shutoffs:** mm[#1SOV], nnn[#2SOV]

---

**Type:** DCDA
**Manufacturer:** Apollo/Conbraco
**Model:** 4DCDA
**Size:** 4
**Orientation:** H
**Meters:** (M),E,F,G,H,I,J,K,L,N,O,P,Q,T
**Manual:** 9
**0.25% Pb:** No
**Spare Parts Only:** Yes
**Approved:** 16-Oct-2000
**Renewed:** 16-Oct-2018
**Bypass:** Apollo/Conbraco 1/2DC 1/2" (H), Apollo/Conbraco W432100 1/2" (H)
**Shutoffs:** (ll),mm

---

**Type:** DCDA
**Manufacturer:** Apollo/Conbraco
**Model:** 4DCDA
**Size:** 4
**Orientation:** VU
**Meters:** (M),E,F,G,H,I,J,K,L,N,O,P,Q,T
**Manual:** 9
**0.25% Pb:** No
**Spare Parts Only:** Yes
**Approved:** 16-Oct-2000
**Renewed:** 16-Oct-2018
**Bypass:** Apollo/Conbraco 1/2DC 1/2" (VU), Apollo/Conbraco W432100 1/2" (VU)
**Shutoffs:** (ll),mm

---

**Type:** DCDA
**Manufacturer:** Apollo/Conbraco
**Model:** 4DCDA6
**Size:** 4
**Orientation:** H
**Meters:** (M),E,F,G,H,I,J,K,L,N,O,P,Q,T
**Manual:** 9
**0.25% Pb:** No
**Spare Parts Only:** Yes
**Approved:** 10-Apr-2001
**Renewed:** 10-Apr-2016
**Bypass:** Apollo/Conbraco 1/2DC 1/2" (H), Apollo/Conbraco W432100 1/2" (H)
**Shutoffs:** (mm)[#1SOV],(nnn)[#2SOV]

**Type:** DCDA
**Manufacturer:** Apollo/Conbraco
**Model:** 4DCDA6
**Size:** 4
**Orientation:** VU
**Meters:** (M),E,F,G,H,I,J,K,L,N,O,P,Q,T
**Manual:** 9
**0.25% Pb:** No
**Spare Parts Only:** Yes
**Approved:** 10-Apr-2001
**Renewed:** 10-Apr-2016
**Bypass:** Apollo/Conbraco 1/2DC 1/2" (VU), Apollo/Conbraco W432100 1/2" (VU)
**Shutoffs:** (mm)[#1SOV],(nnn)[#2SOV]

---

**Type:** DCDA
**Manufacturer:** Apollo/Conbraco
**Model:** 4DCDA7
**Size:** 4
**Orientation:** H
**Meters:** (M),E,F,G,H,I,J,K,L,N,O,P,Q,T
**Manual:** 9
**0.25% Pb:** No
**Spare Parts Only:** Yes
**Approved:** 29-Sep-2004
**Renewed:** 29-Sep-2016
**Bypass:** Apollo/Conbraco 1/2DC 1/2" (H), Apollo/Conbraco W432100 1/2" (H)
**Shutoffs:** (mm)[#1SOV], (qqq)[#2SOV]

---

**Type:** DCDA
**Manufacturer:** Apollo/Conbraco
**Model:** 4DCDA7
**Size:** 4
**Orientation:** VU
**Meters:** (M),E,F,G,H,I,J,K,L,N,O,P,Q,T
**Manual:** 9
**0.25% Pb:** No
**Spare Parts Only:** Yes
**Approved:** 29-Sep-2004
**Renewed:** 29-Sep-2016
**Bypass:** Apollo/Conbraco 1/2DC 1/2" (VU), Apollo/Conbraco W432100 1/2" (VU)
**Shutoffs:** (mm)[#1SOV], (qqq)[#2SOV]

---

**Type:** DCDA
**Manufacturer:** Apollo/Conbraco
**Model:** 4DCDA8
**Size:** 4
**Orientation:** H
**Meters:** (M),E,F,G,H,I,J,K,L,N,O,P,Q,T
**Manual:** 9
**0.25% Pb:** No
**Spare Parts Only:** Yes
**Approved:** 29-Sep-2004
**Renewed:** 29-Sep-2016
**Bypass:** Apollo/Conbraco 1/2DC 1/2" (H), Apollo/Conbraco W432100 1/2" (H)
**Shutoffs:** (ppp),qqq

---

**Type:** DCDA
**Manufacturer:** Apollo/Conbraco
**Model:** 4DCDA8
**Size:** 4
**Orientation:** VU
**Meters:** (M),E,F,G,H,I,J,K,L,N,O,P,Q,T
**Manual:** 9
**0.25% Pb:** No
**Spare Parts Only:** Yes
**Approved:** 29-Sep-2004
**Renewed:** 29-Sep-2016
**Bypass:** Apollo/Conbraco 1/2DC 1/2" (VU), Apollo/Conbraco W432100 1/2" (VU)
**Shutoffs:** (ppp),qqq


2018 © University of Southern California

**Type:** DCDA
**Manufacturer:** Apollo/Conbraco
**Model:** 4DCDAU
**Size:** 4
**Orientation:** VUVD
**Meters:** (M),E,F,G,H,I,J,K,L,N,O,P,Q,T
**Manual:** 9
**0.25% Pb:** No
**Spare Parts Only:** Yes
**Approved:** 10-Apr-2001
**Renewed:** 10-Apr-2016
**Bypass:** Apollo/Conbraco 1/2DC 1/2" (H), Apollo/Conbraco W432100 1/2" (H)
**Shutoffs:** (ll),mm

---

**Type:** DCDA
**Manufacturer:** Apollo/Conbraco
**Model:** 4SG 600U
**Size:** 2 1/2
**Orientation:**
**Meters:**
**Manual:**
**0.25% Pb:** No
**Spare Parts Only:** No
**Approved:**
**Renewed:**
**Bypass:**
**Notes:** model designation changed to DCDA4SGN

---

**Type:** DCDA
**Manufacturer:** Apollo/Conbraco
**Model:** 4SG 600U
**Size:** 3
**Orientation:**
**Meters:**
**Manual:**
**0.25% Pb:** No
**Spare Parts Only:** No
**Approved:**
**Renewed:**
**Bypass:**
**Notes:** model designation changed to DCDA4SGN

---

**Type:** DCDA
**Manufacturer:** Apollo/Conbraco
**Model:** 4SG 600U
**Size:** 4
**Orientation:**
**Meters:**
**Manual:**
**0.25% Pb:** No
**Spare Parts Only:** No
**Approved:**
**Renewed:**
**Bypass:**
**Notes:** model designation changed to DCDA4SGN

---

**Type:** DCDA
**Manufacturer:** Apollo/Conbraco
**Model:** 4SG 600U
**Size:** 6
**Orientation:**
**Meters:**
**Manual:**
**0.25% Pb:** No
**Spare Parts Only:** No
**Approved:**
**Renewed:**
**Bypass:**
**Notes:** model designation changed to DCDA4SGN

---

**Type:** DCDA
**Manufacturer:** Apollo/Conbraco
**Model:** 4SG 600U
**Size:** 8
**Orientation:**
**Meters:**
**Manual:**
**0.25% Pb:** No
**Spare Parts Only:** No
**Approved:**
**Renewed:**
**Bypass:**
**Notes:** model designation changed to DCDA4SGN

**Type:** DCDA
**Manufacturer:** Apollo/Conbraco
**Model:** 4SG-600
**Size:** 2 1/2
**Orientation:**
**Meters:**
**Manual:**
**0.25% Pb:** No
**Spare Parts Only:** No
**Approved:**
**Renewed:**
**Bypass:**
**Notes:** model designation changed to DCDA4SG

---

**Type:** DCDA
**Manufacturer:** Apollo/Conbraco
**Model:** 4SG-600
**Size:** 2 1/2
**Orientation:**
**Meters:**
**Manual:**
**0.25% Pb:** No
**Spare Parts Only:** No
**Approved:**
**Renewed:**
**Bypass:**
**Notes:** model designation changed to DCDA4SG

---

**Type:** DCDA
**Manufacturer:** Apollo/Conbraco
**Model:** 4SG-600
**Size:** 3
**Orientation:**
**Meters:**
**Manual:**
**0.25% Pb:** No
**Spare Parts Only:** No
**Approved:**
**Renewed:**
**Bypass:**
**Notes:** model designation changed to DCDA4SG

---

**Type:** DCDA
**Manufacturer:** Apollo/Conbraco
**Model:** 4SG-600
**Size:** 3
**Orientation:**
**Meters:**
**Manual:**
**0.25% Pb:** No
**Spare Parts Only:** No
**Approved:**
**Renewed:**
**Bypass:**
**Notes:** model designation changed to DCDA4SG

---

**Type:** DCDA
**Manufacturer:** Apollo/Conbraco
**Model:** 4SG-600
**Size:** 4
**Orientation:**
**Meters:**
**Manual:**
**0.25% Pb:** No
**Spare Parts Only:** No
**Approved:**
**Renewed:**
**Bypass:**
**Notes:** model designation changed to DCDA4SG

---

**Type:** DCDA
**Manufacturer:** Apollo/Conbraco
**Model:** 4SG-600
**Size:** 4
**Orientation:**
**Meters:**
**Manual:**
**0.25% Pb:** No
**Spare Parts Only:** No
**Approved:**
**Renewed:**
**Bypass:**
**Notes:** model designation changed to DCDA4SG

---

**Type:** DCDA
**Manufacturer:** Apollo/Conbraco
**Model:** 4SG-600
**Size:** 6
**Orientation:**
**Meters:**
**Manual:**
**0.25% Pb:** No
**Spare Parts Only:** No
**Approved:**
**Renewed:**
**Bypass:**
**Notes:** model designation changed to DCDA4SG


2018 © University of Southern California

**Type:** DCDA
**Manufacturer:** Apollo/Conbraco
**Model:** 4SG-600
**Size:** 6
**Orientation:**
**Meters:**
**Manual:**
**0.25% Pb:** No
**Spare Parts Only:** No
**Approved:**
**Renewed:**
**Bypass:**
**Notes:** model designation changed to DCDA4SG

---

**Type:** DCDA
**Manufacturer:** Apollo/Conbraco
**Model:** 4SG-600
**Size:** 8
**Orientation:**
**Meters:**
**Manual:**
**0.25% Pb:** No
**Spare Parts Only:** No
**Approved:**
**Renewed:**
**Bypass:**
**Notes:** model designation changed to DCDA4SG

---

**Type:** DCDA
**Manufacturer:** Apollo/Conbraco
**Model:** 4SG-600
**Size:** 8
**Orientation:**
**Meters:**
**Manual:**
**0.25% Pb:** No
**Spare Parts Only:** No
**Approved:**
**Renewed:**
**Bypass:**
**Notes:** model designation changed to DCDA4SG

---

**Type:** DCDA
**Manufacturer:** Apollo/Conbraco
**Model:** 6DCDA
**Size:** 6
**Orientation:** H
**Meters:** (M),E,F,G,H,I,J,K,L,N,O,P,Q,T
**Manual:** 9
**0.25% Pb:** No
**Spare Parts Only:** Yes
**Approved:** 16-Oct-2000
**Renewed:** 16-Oct-2018
**Bypass:** Apollo/Conbraco 1/2DC 1/2" (H), Apollo/Conbraco W432100 1/2" (H)
**Shutoffs:** (ll),mm

---

**Type:** DCDA
**Manufacturer:** Apollo/Conbraco
**Model:** 6DCDA
**Size:** 6
**Orientation:** VU
**Meters:** (M),E,F,G,H,I,J,K,L,N,O,P,Q,T
**Manual:** 9
**0.25% Pb:** No
**Spare Parts Only:** Yes
**Approved:** 16-Oct-2000
**Renewed:** 16-Oct-2018
**Bypass:** Apollo/Conbraco 1/2DC 1/2" (VU), Apollo/Conbraco W432100 1/2" (VU)
**Shutoffs:** (ll),mm

---

**Type:** DCDA
**Manufacturer:** Apollo/Conbraco
**Model:** 6DCDA6
**Size:** 6
**Orientation:** H
**Meters:** (M),E,F,G,H,I,J,K,L,N,O,P,Q,T
**Manual:** 9
**0.25% Pb:** No
**Spare Parts Only:** Yes
**Approved:** 10-Apr-2001
**Renewed:** 10-Apr-2016
**Bypass:** Apollo/Conbraco 1/2DC 1/2" (H), Apollo/Conbraco W432100 1/2" (H)
**Shutoffs:** (mm)[#1SOV],(nnn)[#2SOV]

**Type:** DCDA
**Size:** 6
**Manual:** 9
**Approved:** 10-Apr-2001
**Shutoffs:** (mm)[#1SOV],(nnn)[#2SOV]

**Manufacturer:** Apollo/Conbraco
**Orientation:** VU
**0.25% Pb:** No
**Renewed:** 10-Apr-2016

**Model:** 6DCDA6
**Meters:** (M),E,F,G,H,I,J,K,L,N,O,P,Q,T
**Spare Parts Only:** Yes
**Bypass:** Apollo/Conbraco 1/2DC 1/2" (VU), Apollo/Conbraco W432100 1/2" (VU)

---

**Type:** DCDA
**Size:** 6
**Manual:** 9
**Approved:** 29-Sep-2004
**Shutoffs:** (mm)[#1SOV], (qqq)[#2SOV]

**Manufacturer:** Apollo/Conbraco
**Orientation:** H
**0.25% Pb:** No
**Renewed:** 29-Sep-2016

**Model:** 6DCDA7
**Meters:** (M),E,F,G,H,I,J,K,L,N,O,P,Q,T
**Spare Parts Only:** Yes
**Bypass:** Apollo/Conbraco 1/2DC 1/2" (H), Apollo/Conbraco W432100 1/2" (H)

---

**Type:** DCDA
**Size:** 6
**Manual:** 9
**Approved:** 29-Sep-2004
**Shutoffs:** (mm)[#1SOV], (qqq)[#2SOV]

**Manufacturer:** Apollo/Conbraco
**Orientation:** VU
**0.25% Pb:** No
**Renewed:** 29-Sep-2016

**Model:** 6DCDA7
**Meters:** (M),E,F,G,H,I,J,K,L,N,O,P,Q,T
**Spare Parts Only:** Yes
**Bypass:** Apollo/Conbraco 1/2DC 1/2" (VU), Apollo/Conbraco W432100 1/2" (VU)

---

**Type:** DCDA
**Size:** 6
**Manual:** 9
**Approved:** 29-Sep-2004
**Shutoffs:** (ppp),qqq

**Manufacturer:** Apollo/Conbraco
**Orientation:** H
**0.25% Pb:** No
**Renewed:** 29-Sep-2016

**Model:** 6DCDA8
**Meters:** (M),E,F,G,H,I,J,K,L,N,O,P,Q,T
**Spare Parts Only:** Yes
**Bypass:** Apollo/Conbraco 1/2DC 1/2" (H), Apollo/Conbraco W432100 1/2" (H)

---

**Type:** DCDA
**Size:** 6
**Manual:** 9
**Approved:** 29-Sep-2004
**Shutoffs:** (ppp),qqq

**Manufacturer:** Apollo/Conbraco
**Orientation:** VU
**0.25% Pb:** No
**Renewed:** 29-Sep-2016

**Model:** 6DCDA8
**Meters:** (M),E,F,G,H,I,J,K,L,N,O,P,Q,T
**Spare Parts Only:** Yes
**Bypass:** Apollo/Conbraco 1/2DC 1/2" (VU), Apollo/Conbraco W432100 1/2" (VU)


2018 © University of Southern California

**Type:** DCDA
**Size:** 6
**Manual:** 9
**Approved:** 10-Apr-2001
**Shutoffs:** (ll),mm

**Manufacturer:** Apollo/Conbraco
**Orientation:** VUVD
**0.25% Pb:** No
**Renewed:** 10-Apr-2016

**Model:** 6DCDAU
**Meters:** (M),E,F,G,H,I,J,K,L,N,O,P,Q,T
**Spare Parts Only:** Yes
**Bypass:** Apollo/Conbraco 1/2DC 1/2" (H), Apollo/Conbraco W432100 1/2" (H)

---

**Type:** DCDA
**Size:** 8
**Manual:** 9
**Approved:** 16-Jan-2003
**Shutoffs:** (mm),ll

**Manufacturer:** Apollo/Conbraco
**Orientation:** H
**0.25% Pb:** No
**Renewed:** 16-Jan-2018

**Model:** 8DCDA
**Meters:** (M),F,G,H,I,J,K,L,N,O,P,Q,T
**Spare Parts Only:** Yes
**Bypass:** Apollo/Conbraco 1/2DC 1/2" (H), Apollo/Conbraco W432100 1/2" (H)

---

**Type:** DCDA
**Size:** 8
**Manual:** 9
**Approved:** 16-Jan-2003
**Shutoffs:** (mm),ll

**Manufacturer:** Apollo/Conbraco
**Orientation:** VU
**0.25% Pb:** No
**Renewed:** 16-Jan-2018

**Model:** 8DCDA
**Meters:** (M),F,G,H,I,J,K,L,N,O,P,Q,T
**Spare Parts Only:** Yes
**Bypass:** Apollo/Conbraco 1/2DC 1/2" (VU), Apollo/Conbraco W432100 1/2" (VU)

---

**Type:** DCDA
**Size:** 8
**Manual:** 9
**Approved:** 29-Sep-2004
**Shutoffs:** (mm)[#1SOV], (qqq)[#2SOV]

**Manufacturer:** Apollo/Conbraco
**Orientation:** H
**0.25% Pb:** No
**Renewed:** 29-Sep-2016

**Model:** 8DCDA7
**Meters:** (M),F,G,H,I,J,K,L,N,O,P,Q,T
**Spare Parts Only:** Yes
**Bypass:** Apollo/Conbraco 1/2DC 1/2" (H), Apollo/Conbraco W432100 1/2" (H)

---

**Type:** DCDA
**Size:** 8
**Manual:** 9
**Approved:** 29-Sep-2004
**Shutoffs:** (mm)[#1SOV], (qqq)[#2SOV]

**Manufacturer:** Apollo/Conbraco
**Orientation:** VU
**0.25% Pb:** No
**Renewed:** 29-Sep-2016

**Model:** 8DCDA7
**Meters:** (M),F,G,H,I,J,K,L,N,O,P,Q,T
**Spare Parts Only:** Yes
**Bypass:** Apollo/Conbraco 1/2DC 1/2" (VU), Apollo/Conbraco W432100 1/2" (VU)

**Type:** DCDA
**Size:** 8
**Manual:** 9
**Approved:** 29-Sep-2004
**Shutoffs:** (ppp),qqq

**Manufacturer:** Apollo/Conbraco
**Orientation:** H
**0.25% Pb:** No
**Renewed:** 29-Sep-2016

**Model:** 8DCDA8
**Meters:** (M),E,F,G,H,I,J,K,L,N,O,P,Q,T
**Spare Parts Only:** Yes
**Bypass:** Apollo/Conbraco 1/2DC 1/2" (H), Apollo/Conbraco W432100 1/2" (H)

---

**Type:** DCDA
**Size:** 8
**Manual:** 9
**Approved:** 29-Sep-2004
**Shutoffs:** (ppp),qqq

**Manufacturer:** Apollo/Conbraco
**Orientation:** VU
**0.25% Pb:** No
**Renewed:** 29-Sep-2016

**Model:** 8DCDA8
**Meters:** (M),E,F,G,H,I,J,K,L,N,O,P,Q,T
**Spare Parts Only:** Yes
**Bypass:** Apollo/Conbraco 1/2DC 1/2" (VU), Apollo/Conbraco W432100 1/2" (VU)

---

**Type:** DCDA
**Size:** 10
**Manual:** 9
**Approved:** 16-Jan-2003
**Shutoffs:** (mm),ll, xxxxx, zzzzz, bbbbbb, cccccc
**Notes:** formerly 10DCDA

**Manufacturer:** Apollo/Conbraco
**Orientation:** H
**0.25% Pb:** No
**Renewed:** 16-Jan-2018

**Model:** DCDA4S
**Meters:** (M),F,G,H,I,J,K,L,N,O,P,Q,T
**Spare Parts Only:** No
**Bypass:** Apollo/Conbraco 1/2DC 1/2" (H), Apollo/Conbraco W432100 1/2" (H)

---

**Type:** DCDA
**Size:** 10
**Manual:** 9
**Approved:** 16-Jan-2003
**Shutoffs:** (mm),ll, xxxxx, zzzzz, bbbbbb, cccccc
**Notes:** formerly 10DCDA

**Manufacturer:** Apollo/Conbraco
**Orientation:** VU
**0.25% Pb:** No
**Renewed:** 16-Jan-2018

**Model:** DCDA4S
**Meters:** (M),F,G,H,I,J,K,L,N,O,P,Q,T
**Spare Parts Only:** No
**Bypass:** Apollo/Conbraco 1/2DC 1/2" (VU), Apollo/Conbraco W432100 1/2" (VU)

---

**Type:** DCDA
**Size:** 2 1/2
**Manual:** 9
**Approved:** 18-Oct-2007
**Shutoffs:** (yyy)ppp,qqq,ttt,xxxxx,yyyyy,zzzzz,aaaaaa
**Notes:** formerly 4SG-600

**Manufacturer:** Apollo/Conbraco
**Orientation:** H
**0.25% Pb:** No
**Renewed:** 18-Oct-2016

**Model:** DCDA4SG
**Meters:** (M),E,F,G,H,I,J,K,L,N,O,P,Q,T
**Spare Parts Only:** No
**Bypass:** Apollo/Conbraco 4S103 1/2" (H), Apollo/Conbraco W432100 1/2" (H)


2018 © University of Southern California

**Type:** DCDA
**Manufacturer:** Apollo/Conbraco
**Model:** DCDA4SG
**Size:** 2 1/2
**Orientation:** VU
**Meters:** (M),E,F,G,H,I,J,K,L,N,O,P,Q,T
**Manual:** 9
**0.25% Pb:** No
**Spare Parts Only:** No
**Approved:** 18-Oct-2007
**Renewed:** 18-Oct-2016
**Bypass:** Apollo/Conbraco 4S103 1/2" (VU), Apollo/Conbraco W432100 1/2" (V)
**Shutoffs:** (yyy)ppp,qqq,ttt,xxxxx,yyyyy,zzzzz,aaaaaa
**Notes:** formerly 4SG-600

---

**Type:** DCDA
**Manufacturer:** Apollo/Conbraco
**Model:** DCDA4SG
**Size:** 3
**Orientation:** H
**Meters:** (M),E,F,G,H,I,J,K,L,N,O,P,Q,T
**Manual:** 9
**0.25% Pb:** No
**Spare Parts Only:** No
**Approved:** 18-Oct-2007
**Renewed:** 18-Oct-2016
**Bypass:** Apollo/Conbraco 4S103 1/2" (H), Apollo/Conbraco W432100 1/2" (H)
**Shutoffs:** (yyy)ppp,qqq,ttt,xxxxx,yyyyy,zzzzz,aaaaaa
**Notes:** formerly 4SG-600

---

**Type:** DCDA
**Manufacturer:** Apollo/Conbraco
**Model:** DCDA4SG
**Size:** 3
**Orientation:** VU
**Meters:** (M),E,F,G,H,I,J,K,L,N,O,P,Q,T
**Manual:** 9
**0.25% Pb:** No
**Spare Parts Only:** No
**Approved:** 18-Oct-2007
**Renewed:** 18-Oct-2016
**Bypass:** Apollo/Conbraco 4S103 1/2" (VU), Apollo/Conbraco W432100 1/2" (V)
**Shutoffs:** (yyy)ppp,qqq,ttt,xxxxx,yyyyy,zzzzz,aaaaaa
**Notes:** formerly 4SG-600

---

**Type:** DCDA
**Manufacturer:** Apollo/Conbraco
**Model:** DCDA4SG
**Size:** 4
**Orientation:** H
**Meters:** (M),E,F,G,H,I,J,K,L,N,O,P,Q,T
**Manual:** 9
**0.25% Pb:** No
**Spare Parts Only:** No
**Approved:** 18-Oct-2007
**Renewed:** 18-Oct-2016
**Bypass:** Apollo/Conbraco 4S103 1/2" (H), Apollo/Conbraco W432100 1/2" (H)
**Shutoffs:** (yyy)ppp,qqq,ttt,xxxxx,yyyyy,zzzzz,aaaaaa
**Notes:** formerly 4SG-600

---

**Type:** DCDA
**Manufacturer:** Apollo/Conbraco
**Model:** DCDA4SG
**Size:** 4
**Orientation:** VU
**Meters:** (M),E,F,G,H,I,J,K,L,N,O,P,Q,T
**Manual:** 9
**0.25% Pb:** No
**Spare Parts Only:** No
**Approved:** 18-Oct-2007
**Renewed:** 18-Oct-2016
**Bypass:** Apollo/Conbraco 4S103 1/2" (VU), Apollo/Conbraco W432100 1/2" (V)
**Shutoffs:** (yyy)ppp,qqq,ttt,xxxxx,yyyyy,zzzzz,aaaaaa
**Notes:** formerly 4SG-600

**Type:** DCDA
**Manufacturer:** Apollo/Conbraco
**Model:** DCDA4SG
**Size:** 6
**Orientation:** H
**Meters:** (M),E,F,G,H,I,J,K,L,N,O,P,Q,T
**Manual:** 9
**0.25% Pb:** No
**Spare Parts Only:** No
**Approved:** 18-Oct-2007
**Renewed:** 18-Oct-2016
**Bypass:** Apollo/Conbraco 4S103 1/2" (H), Apollo/Conbraco W432100 1/2" (H)
**Shutoffs:** (yyy)ppp,qqq,ttt,xxxxx,yyyyy,zzzzz,aaaaaa
**Notes:** formerly 4SG-600

---

**Type:** DCDA
**Manufacturer:** Apollo/Conbraco
**Model:** DCDA4SG
**Size:** 6
**Orientation:** VU
**Meters:** (M),E,F,G,H,I,J,K,L,N,O,P,Q,T
**Manual:** 9
**0.25% Pb:** No
**Spare Parts Only:** No
**Approved:** 18-Oct-2007
**Renewed:** 18-Oct-2016
**Bypass:** Apollo/Conbraco 4S103 1/2" (VU), Apollo/Conbraco W432100 1/2" (V)
**Shutoffs:** (yyy)ppp,qqq,ttt,xxxxx,yyyyy,zzzzz,aaaaaa
**Notes:** formerly 4SG-600

---

**Type:** DCDA
**Manufacturer:** Apollo/Conbraco
**Model:** DCDA4SG
**Size:** 8
**Orientation:** H
**Meters:** (M),E,F,G,H,I,J,K,L,N,O,P,Q,T
**Manual:** 9
**0.25% Pb:** No
**Spare Parts Only:** No
**Approved:** 18-Oct-2007
**Renewed:** 18-Oct-2016
**Bypass:** Apollo/Conbraco 4S103 1/2" (H), Apollo/Conbraco W432100 1/2" (H)
**Shutoffs:** (yyy)ppp,qqq,ttt,xxxxx,yyyyy,zzzzz,aaaaaa
**Notes:** formerly 4SG-600

---

**Type:** DCDA
**Manufacturer:** Apollo/Conbraco
**Model:** DCDA4SG
**Size:** 8
**Orientation:** VU
**Meters:** (M),E,F,G,H,I,J,K,L,N,O,P,Q,T
**Manual:** 9
**0.25% Pb:** No
**Spare Parts Only:** No
**Approved:** 18-Oct-2007
**Renewed:** 18-Oct-2016
**Bypass:** Apollo/Conbraco 4S103 1/2" (VU), Apollo/Conbraco W432100 1/2" (V)
**Shutoffs:** (yyy)ppp,qqq,ttt,xxxxx,yyyyy,zzzzz,aaaaaa
**Notes:** formerly 4SG-600

---

**Type:** DCDA
**Manufacturer:** Apollo/Conbraco
**Model:** DCDA4SGN
**Size:** 2 1/2
**Orientation:** VUVD
**Meters:** (M),E,F,G,H,I,J,K,L,N,O,P,Q,T
**Manual:** 9
**0.25% Pb:** No
**Spare Parts Only:** Yes
**Approved:** 18-Oct-2007
**Renewed:** 18-Oct-2016
**Bypass:** Apollo/Conbraco 4S103 1/2" (H), Apollo/Conbraco W432100 1/2" (H)
**Shutoffs:** (yyy)ppp,qqq,ttt
**Notes:** formerly 4SG 600U


2018 © University of Southern California

**Type:** DCDA
**Size:** 3
**Manual:** 9
**Approved:** 18-Oct-2007
**Shutoffs:** (yyy)ppp,qqq,ttt
**Notes:** formerly 4SG 600U

**Manufacturer:** Apollo/Conbraco
**Orientation:** VUVD
**0.25% Pb:** No
**Renewed:** 18-Oct-2016

**Model:** DCDA4SGN
**Meters:** (M),E,F,G,H,I,J,K,L,N,O,P,Q,T
**Spare Parts Only:** Yes
**Bypass:** Apollo/Conbraco 4S103 1/2" (H), Apollo/Conbraco W432100 1/2" (H)

---

**Type:** DCDA
**Size:** 4
**Manual:** 9
**Approved:** 18-Oct-2007
**Shutoffs:** (yyy)ppp,qqq,ttt
**Notes:** formerly 4SG 600U

**Manufacturer:** Apollo/Conbraco
**Orientation:** VUVD
**0.25% Pb:** No
**Renewed:** 18-Oct-2016

**Model:** DCDA4SGN
**Meters:** (M),E,F,G,H,I,J,K,L,N,O,P,Q,T
**Spare Parts Only:** Yes
**Bypass:** Apollo/Conbraco 4S103 1/2" (H), Apollo/Conbraco W432100 1/2" (H)

---

**Type:** DCDA
**Size:** 6
**Manual:** 9
**Approved:** 18-Oct-2007
**Shutoffs:** (yyy)ppp,qqq,ttt
**Notes:** formerly 4SG 600U

**Manufacturer:** Apollo/Conbraco
**Orientation:** VUVD
**0.25% Pb:** No
**Renewed:** 18-Oct-2016

**Model:** DCDA4SGN
**Meters:** (M),E,F,G,H,I,J,K,L,N,O,P,Q,T
**Spare Parts Only:** Yes
**Bypass:** Apollo/Conbraco 4S103 1/2" (H), Apollo/Conbraco W432100 1/2" (H)

---

**Type:** DCDA
**Size:** 8
**Manual:** 9
**Approved:** 18-Oct-2007
**Shutoffs:** (yyy)ppp,qqq,ttt
**Notes:** formerly 4SG 600U

**Manufacturer:** Apollo/Conbraco
**Orientation:** VUVD
**0.25% Pb:** No
**Renewed:** 18-Oct-2016

**Model:** DCDA4SGN
**Meters:** (M),E,F,G,H,I,J,K,L,N,O,P,Q,T
**Spare Parts Only:** Yes
**Bypass:** Apollo/Conbraco 4S103 1/2" (H), Apollo/Conbraco W432100 1/2" (H)

---

**Type:** DCDA
**Size:** 2 1/2
**Manual:** 10
**Approved:** 30-Oct-2013
**Shutoffs:** (yyy), cccc, dddd, mmmm, nnnn, xxxxx, yyyyy, zzzzz, aaaaaa

**Manufacturer:** Apollo/Conbraco
**Orientation:** H
**0.25% Pb:** Yes
**Renewed:** 30-Oct-2016

**Model:** DCDALF4A
**Meters:** (P),G,H,I,J,K,L,M,N,O,Q,T
**Spare Parts Only:** No
**Bypass:** Apollo DCLF4A 1/2" (H)

**Type:** DCDA
**Manufacturer:** Apollo/Conbraco
**Model:** DCDALF4A
**Size:** 2 1/2
**Orientation:** VU
**Meters:** (P),G,H,I,J,K,L,M,N,O,Q,T
**Manual:** 10
**0.25% Pb:** Yes
**Spare Parts Only:** No
**Approved:** 30-Oct-2013
**Renewed:** 30-Oct-2016
**Bypass:** Apollo DCLF4A 1/2" (VU)
**Shutoffs:** (yyy), cccc, dddd, mmmm, nnnn, xxxxx, yyyyy, zzzzz, aaaaaa

---

**Type:** DCDA
**Manufacturer:** Apollo/Conbraco
**Model:** DCDALF4A
**Size:** 3
**Orientation:** H
**Meters:** (P),G,H,I,J,K,L,M,N,O,Q,T
**Manual:** 10
**0.25% Pb:** Yes
**Spare Parts Only:** No
**Approved:** 30-Oct-2013
**Renewed:** 30-Oct-2016
**Bypass:** Apollo DCLF4A 1/2" (H)
**Shutoffs:** (yyy), cccc, dddd, mmmm, nnnn, xxxxx, yyyyy, zzzzz, aaaaaa

---

**Type:** DCDA
**Manufacturer:** Apollo/Conbraco
**Model:** DCDALF4A
**Size:** 3
**Orientation:** VU
**Meters:** (P),G,H,I,J,K,L,M,N,O,Q,T
**Manual:** 10
**0.25% Pb:** Yes
**Spare Parts Only:** No
**Approved:** 30-Oct-2013
**Renewed:** 30-Oct-2016
**Bypass:** Apollo DCLF4A 1/2" (VU)
**Shutoffs:** (yyy), cccc, dddd, mmmm, nnnn, xxxxx, yyyyy, zzzzz, aaaaaa

---

**Type:** DCDA
**Manufacturer:** Apollo/Conbraco
**Model:** DCDALF4A
**Size:** 4
**Orientation:** H
**Meters:** (P),G,H,I,J,K,L,M,N,O,Q,T
**Manual:** 10
**0.25% Pb:** Yes
**Spare Parts Only:** No
**Approved:** 24-Jun-2013
**Renewed:** 24-Jun-2016
**Bypass:** Apollo DCLF4A 1/2" (H)
**Shutoffs:** (yyy), cccc, dddd, mmmm, nnnn, xxxxx, yyyyy, zzzzz, aaaaaa

---

**Type:** DCDA
**Manufacturer:** Apollo/Conbraco
**Model:** DCDALF4A
**Size:** 4
**Orientation:** VU
**Meters:** (P),G,H,I,J,K,L,M,N,O,Q,T
**Manual:** 10
**0.25% Pb:** Yes
**Spare Parts Only:** No
**Approved:** 24-Jun-2013
**Renewed:** 24-Jun-2016
**Bypass:** Apollo DCLF4A 1/2" (VU)
**Shutoffs:** (yyy), cccc, dddd, mmmm, nnnn, xxxxx, yyyyy, zzzzz, aaaaaa

---

**Type:** DCDA
**Manufacturer:** Apollo/Conbraco
**Model:** DCDALF4A
**Size:** 6
**Orientation:** H
**Meters:** (P),G,H,I,J,K,L,M,N,O,Q,T
**Manual:** 10
**0.25% Pb:** Yes
**Spare Parts Only:** No
**Approved:** 24-Jun-2013
**Renewed:** 24-Jun-2016
**Bypass:** Apollo DCLF4A 1/2" (H)
**Shutoffs:** (yyy), cccc, dddd, mmmm, nnnn, xxxxx, yyyyy, zzzzz, aaaaaa

---

**Type:** DCDA
**Manufacturer:** Apollo/Conbraco
**Model:** DCDALF4A
**Size:** 6
**Orientation:** VU
**Meters:** (P),G,H,I,J,K,L,M,N,O,Q,T
**Manual:** 10
**0.25% Pb:** Yes
**Spare Parts Only:** No
**Approved:** 24-Jun-2013
**Renewed:** 24-Jun-2016
**Bypass:** Apollo DCLF4A 1/2" (VU)
**Shutoffs:** (yyy), cccc, dddd, mmmm, nnnn, xxxxx, yyyyy, zzzzz, aaaaaa


2018 © University of Southern California

**Type:** DCDA
**Manufacturer:** Apollo/Conbraco
**Model:** DCDALF4A
**Size:** 8
**Orientation:** H
**Meters:** (P),G,H,I,J,K,L,M,N,O,Q,T
**Manual:** 10
**0.25% Pb:** Yes
**Spare Parts Only:** No
**Approved:** 15-May-2014
**Renewed:** 15-May-2017
**Bypass:** Apollo DCLF4A 1/2" (H)
**Shutoffs:** (yyy), cccc, dddd, mmmm, nnnn, xxxxx, yyyyy, zzzzz, aaaaaa

---

**Type:** DCDA
**Manufacturer:** Apollo/Conbraco
**Model:** DCDALF4A
**Size:** 8
**Orientation:** VU
**Meters:** (P),G,H,I,J,K,L,M,N,O,Q,T
**Manual:** 10
**0.25% Pb:** Yes
**Spare Parts Only:** No
**Approved:** 15-May-2014
**Renewed:** 15-May-2017
**Bypass:** Apollo DCLF4A 1/2" (VU)
**Shutoffs:** (yyy), cccc, dddd, mmmm, nnnn, xxxxx, yyyyy, zzzzz, aaaaaa

---

**Type:** DCDA
**Manufacturer:** Apollo/Conbraco
**Model:** DCDALF4AN
**Size:** 2 1/2
**Orientation:** VUVD
**Meters:** (P),G,H,I,J,K,L,M,N,O,Q,T
**Manual:** 10
**0.25% Pb:** Yes
**Spare Parts Only:** No
**Approved:** 10-Jun-2014
**Renewed:** 10-Jun-2017
**Bypass:** Apollo DCLF4A 1/2" (H)
**Shutoffs:** (yyy), cccc, dddd, mmmm, nnnn, xxxxx, yyyyy, zzzzz, aaaaaa

---

**Type:** DCDA
**Manufacturer:** Apollo/Conbraco
**Model:** DCDALF4AN
**Size:** 3
**Orientation:** VUVD
**Meters:** (P),G,H,I,J,K,L,M,N,O,Q,T
**Manual:** 10
**0.25% Pb:** Yes
**Spare Parts Only:** No
**Approved:** 08-Apr-2014
**Renewed:** 08-Apr-2017
**Bypass:** Apollo DCLF4A 1/2" (H)
**Shutoffs:** (yyy), cccc, dddd, mmmm, nnnn, xxxxx, yyyyy, zzzzz, aaaaaa

---

**Type:** DCDA
**Manufacturer:** Apollo/Conbraco
**Model:** DCDALF4AN
**Size:** 4
**Orientation:** VUVD
**Meters:** (P),G,H,I,J,K,L,M,N,O,Q,T
**Manual:** 10
**0.25% Pb:** Yes
**Spare Parts Only:** No
**Approved:** 23-Jan-2014
**Renewed:** 23-Jan-2017
**Bypass:** Apollo DCLF4A 1/2" (H)
**Shutoffs:** (yyy), cccc, dddd, mmmm, nnnn, xxxxx, yyyyy, zzzzz, aaaaaa

---

**Type:** DCDA
**Manufacturer:** Apollo/Conbraco
**Model:** DCDALF4AN
**Size:** 6
**Orientation:** VUVD
**Meters:** (P),G,H,I,J,K,L,M,N,O,Q,T
**Manual:** 10
**0.25% Pb:** Yes
**Spare Parts Only:** No
**Approved:** 10-Jun-2014
**Renewed:** 10-Jun-2017
**Bypass:** Apollo DCLF4A 1/2" (H)
**Shutoffs:** (yyy), cccc, dddd, mmmm, nnnn, xxxxx, yyyyy, zzzzz, aaaaaa

---

**Type:** DCDA
**Manufacturer:** Apollo/Conbraco
**Model:** DCDALF4AN
**Size:** 8
**Orientation:** VUVD
**Meters:**
**Manual:** 10
**0.25% Pb:** Yes
**Spare Parts Only:** No
**Approved:** 14-Mar-2014
**Renewed:** 14-Mar-2017
**Bypass:**
**Shutoffs:** (yyy), cccc, dddd, mmmm, nnnn, xxxxx, yyyyy, zzzzz, aaaaaa

**Type:** DCDA
**Manufacturer:** Apollo/Conbraco
**Model:** DCDALF4AR
**Size:** 2 1/2
**Orientation:** H
**Meters:** (M),G,H,I,J,K,L,N,O,Q,T
**Manual:** 10
**0.25% Pb:** No
**Spare Parts Only:** No
**Approved:** 09-Nov-2015
**Renewed:**
**Bypass:** Apollo/Conbraco DCLF4A 1/2" (H)
**Shutoffs:** (cccc), dddd, mmmm, nnnn, xxxxx, yyyyy, zzzzz, aaaaaa
**Notes:** Integral Stainless Steel grooved spool between the #2 ck and #2 SOV - assembly length: min. 34" and max. 47 1/8"

---

**Type:** DCDA
**Manufacturer:** Apollo/Conbraco
**Model:** DCDALF4AR
**Size:** 2 1/2
**Orientation:** VU
**Meters:** (M),G,H,I,J,K,L,N,O,Q,T
**Manual:** 10
**0.25% Pb:** No
**Spare Parts Only:** No
**Approved:** 09-Nov-2015
**Renewed:**
**Bypass:** Apollo/Conbraco DCLF4A 1/2" (VU)
**Shutoffs:** (cccc), dddd, mmmm, nnnn, xxxxx, yyyyy, zzzzz, aaaaaa
**Notes:** Integral Stainless Steel grooved spool between the #2 ck and #2 SOV - assembly length: min. 34" and max. 47 1/8"

---

**Type:** DCDA
**Manufacturer:** Apollo/Conbraco
**Model:** DCDALF4AR
**Size:** 3
**Orientation:** H
**Meters:** (M),G,H,I,J,K,L,N,O,Q,T
**Manual:** 10
**0.25% Pb:** No
**Spare Parts Only:** No
**Approved:** 09-Nov-2015
**Renewed:**
**Bypass:** Apollo/Conbraco DCLF4A 1/2" (H)
**Shutoffs:** (cccc), dddd, mmmm, nnnn, xxxxx, yyyyy, zzzzz, aaaaaa
**Notes:** Integral Stainless Steel grooved spool between the #2 ck and #2 SOV - assembly length: min. 35" and max. 48 1/8"

---

**Type:** DCDA
**Manufacturer:** Apollo/Conbraco
**Model:** DCDALF4AR
**Size:** 3
**Orientation:** VU
**Meters:** (M),G,H,I,J,K,L,N,O,Q,T
**Manual:** 10
**0.25% Pb:** No
**Spare Parts Only:** No
**Approved:** 09-Nov-2015
**Renewed:**
**Bypass:** Apollo/Conbraco DCLF4A 1/2" (VU)
**Shutoffs:** (cccc), dddd, mmmm, nnnn, xxxxx, yyyyy, zzzzz, aaaaaa
**Notes:** Integral Stainless Steel grooved spool between the #2 ck and #2 SOV - assembly length: min. 35" and max. 48 1/8"

---


2018 © University of Southern California

**Type:** DCDA
**Manufacturer:** Apollo/Conbraco
**Model:** DCDALF4AR
**Size:** 4
**Orientation:** H
**Meters:** (M),G,H,I,J,K,L,N,O,Q,T
**Manual:** 10
**0.25% Pb:** No
**Spare Parts Only:** No
**Approved:** 21-Sep-2015
**Renewed:** 21-Sep-2018
**Bypass:** Apollo/Conbraco DCLF4A 1/2" (H)
**Shutoffs:** (cccc), dddd, mmmm, nnnn, xxxxx, yyyyy, zzzzz, aaaaaa
**Notes:** Integral Stainless Steel grooved spool between the #2 ck and #2 SOV - assembly length: min. 37 3/8" and max. 62 1/4"

---

**Type:** DCDA
**Manufacturer:** Apollo/Conbraco
**Model:** DCDALF4AR
**Size:** 4
**Orientation:** VU
**Meters:** (M),G,H,I,J,K,L,N,O,Q,T
**Manual:** 10
**0.25% Pb:** No
**Spare Parts Only:** No
**Approved:** 21-Sep-2015
**Renewed:** 21-Sep-2018
**Bypass:** Apollo/Conbraco DCLF4A 1/2" (VU)
**Shutoffs:** (cccc), dddd, mmmm, nnnn, xxxxx, yyyyy, zzzzz, aaaaaa
**Notes:** Integral Stainless Steel grooved spool between the #2 ck and #2 SOV - assembly length: min. 37 3/8" and max. 62 1/4"

---

**Type:** DCDA
**Manufacturer:** Apollo/Conbraco
**Model:** DCDALF4AR
**Size:** 6
**Orientation:** H
**Meters:** (M),G,H,I,J,K,L,N,O,Q,T
**Manual:** 10
**0.25% Pb:** No
**Spare Parts Only:** No
**Approved:** 21-Sep-2015
**Renewed:** 21-Sep-2018
**Bypass:** Apollo/Conbraco DCLF4A 1/2" (H)
**Shutoffs:** (cccc), dddd, mmmm, nnnn, xxxxx, yyyyy, zzzzz, aaaaaa
**Notes:** Integral Stainless Steel grooved spool between the #2 ck and #2 SOV - assembly length: min. 46" and max. 71 1/4"

---

**Type:** DCDA
**Manufacturer:** Apollo/Conbraco
**Model:** DCDALF4AR
**Size:** 6
**Orientation:** VU
**Meters:** (M),G,H,I,J,K,L,N,O,Q,T
**Manual:** 10
**0.25% Pb:** No
**Spare Parts Only:** No
**Approved:** 21-Sep-2015
**Renewed:** 21-Sep-2018
**Bypass:** Apollo/Conbraco DCLF4A 1/2" (VU)
**Shutoffs:** (cccc), dddd, mmmm, nnnn, xxxxx, yyyyy, zzzzz, aaaaaa
**Notes:** Integral Stainless Steel grooved spool between the #2 ck and #2 SOV - assembly length: min. 46" and max. 71 1/4"

**Type:** DCDA
**Manufacturer:** Apollo/Conbraco
**Model:** DCDALF4AR
**Size:** 8
**Orientation:** H
**Meters:** (M),G,H,I,J,K,L,N,O,Q,T
**Manual:** 10
**0.25% Pb:** No
**Spare Parts Only:** No
**Approved:** 21-Dec-2015
**Renewed:**
**Bypass:** Apollo/Conbraco DCLF4A 1/2" (H)
**Shutoffs:** (cccc), dddd, mmmm, nnnn, xxxxx, yyyyy, zzzzz, aaaaaa
**Notes:** Integral Stainless Steel grooved spool between the #2 ck and #2 SOV - assembly length: min. 55 3/4" and max. 86"

---

**Type:** DCDA
**Manufacturer:** Apollo/Conbraco
**Model:** DCDALF4AR
**Size:** 8
**Orientation:** VU
**Meters:** (M),G,H,I,J,K,L,N,O,Q,T
**Manual:** 10
**0.25% Pb:** No
**Spare Parts Only:** No
**Approved:** 21-Dec-2015
**Renewed:**
**Bypass:** Apollo/Conbraco DCLF4A 1/2" (VU)
**Shutoffs:** (cccc), dddd, mmmm, nnnn, xxxxx, yyyyy, zzzzz, aaaaaa
**Notes:** Integral Stainless Steel grooved spool between the #2 ck and #2 SOV - assembly length: min. 55 3/4" and max. 86"

---

**Type:** DCDA
**Manufacturer:** Conbraco
**Model:**
**Size:**
**Orientation:**
**Meters:**
**Manual:**
**0.25% Pb:** No
**Spare Parts Only:** No
**Approved:**
**Renewed:**
**Bypass:**
**Notes:** See Apollo/Conbraco

---

**Type:** DCDA
**Manufacturer:** Febco
**Model:** 806 Type YD
**Size:** 3
**Orientation:**
**Meters:**
**Manual:**
**0.25% Pb:** No
**Spare Parts Only:** No
**Approved:**
**Renewed:**
**Bypass:**
**Notes:** model designation changed to 806YD

---

**Type:** DCDA
**Manufacturer:** Febco
**Model:** 806 Type YD
**Size:** 4
**Orientation:**
**Meters:**
**Manual:**
**0.25% Pb:** No
**Spare Parts Only:** No
**Approved:**
**Renewed:**
**Bypass:**
**Notes:** model designation changed to 806YD

---

**Type:** DCDA
**Manufacturer:** Febco
**Model:** 806 Type YD
**Size:** 6
**Orientation:**
**Meters:**
**Manual:**
**0.25% Pb:** No
**Spare Parts Only:** No
**Approved:**
**Renewed:**
**Bypass:**
**Notes:** model designation changed to 806YD


2018 © University of Southern California

**Type:** DCDA
**Manufacturer:** Febco
**Model:** 806 Type YD
**Size:** 8
**Orientation:**
**Meters:**
**Manual:**
**0.25% Pb:** No
**Spare Parts Only:** No
**Approved:**
**Renewed:**
**Bypass:**
**Notes:** model designation changed to 806YD

---

**Type:** DCDA
**Manufacturer:** Febco
**Model:** 806 Type YD
**Size:** 10
**Orientation:**
**Meters:**
**Manual:**
**0.25% Pb:** No
**Spare Parts Only:** No
**Approved:**
**Renewed:**
**Bypass:**
**Notes:** model designation changed to 806YD

---

**Type:** DCDA
**Manufacturer:** Febco
**Model:** 806YD
**Size:** 3
**Orientation:** H
**Meters:** (M),B,C,D,E,F,G,H,I,J,K,L,N,O,P,Q,T
**Manual:** 8
**0.25% Pb:** No
**Spare Parts Only:** Yes
**Approved:** 26-Sep-1988
**Renewed:** 26-Sep-2018
**Bypass:** Febco 805Y 3/4" (H), Febco 805YB 3/4"(H)
**Shutoffs:** (ff),mm,oo,pp,uu,zzz,ffff,gggg
**Notes:** formerly 806 Type YD

---

**Type:** DCDA
**Manufacturer:** Febco
**Model:** 806YD
**Size:** 4
**Orientation:** H
**Meters:** (F),A,B,C,D,E,G,H,I,J,K,L,M,N,O,P,Q,T
**Manual:** 7
**0.25% Pb:** No
**Spare Parts Only:** Yes
**Approved:** 10-Jul-1987
**Renewed:** 10-Jul-2017
**Bypass:** Febco 805Y 3/4" (H), Febco 805YB 3/4"(H)
**Shutoffs:** (ff),mm,oo,pp,uu,zzz,ffff,gggg
**Notes:** formerly 806 Type YD

---

**Type:** DCDA
**Manufacturer:** Febco
**Model:** 806YD
**Size:** 6
**Orientation:** H
**Meters:** (F),A,B,C,D,E,G,H,I,J,K,L,M,N,O,P,Q,T
**Manual:** 7
**0.25% Pb:** No
**Spare Parts Only:** Yes
**Approved:** 10-Jul-1987
**Renewed:** 10-Jul-2017
**Bypass:** Febco 805Y 3/4" (H), Febco 805YB 3/4"(H)
**Shutoffs:** (ff),mm,oo,pp,uu,zzz,ffff,gggg
**Notes:** formerly 806 Type YD

**Type:** DCDA
**Manufacturer:** Febco
**Model:** 806YD
**Size:** 8
**Orientation:** H
**Meters:** (F),A,B,C,D,E,G,H,I,J,K,L,M,N,O,P,Q,T
**Manual:** 7
**0.25% Pb:** No
**Spare Parts Only:** Yes
**Approved:** 10-Jul-1987
**Renewed:** 10-Jul-2017
**Bypass:** Febco 805Y 3/4" (H), Febco 805YB 3/4"(H)
**Shutoffs:** (ff),mm,oo,pp,uu,zzz,ffff,gggg
**Notes:** formerly 806 Type YD

---

**Type:** DCDA
**Manufacturer:** Febco
**Model:** 806YD
**Size:** 10
**Orientation:** H
**Meters:** (F),A,B,C,D,E,G,H,I,J,K,L,M,N,O,P,Q,T
**Manual:** 7
**0.25% Pb:** No
**Spare Parts Only:** Yes
**Approved:** 10-Jul-1987
**Renewed:** 10-Jul-2017
**Bypass:** Febco 805Y 3/4" (H), Febco 805YB 3/4"(H)
**Shutoffs:** (ff),mm,oo,pp,uu,zzz,ffff,gggg
**Notes:** formerly 806 Type YD

---

**Type:** DCDA
**Manufacturer:** Febco
**Model:** 856
**Size:** 2 1/2
**Orientation:** H
**Meters:** (M),B,C,D,E,F,G,H,I,J,K,L,N,O,P,Q,T
**Manual:** 8
**0.25% Pb:** No
**Spare Parts Only:** Yes
**Approved:** 19-Mar-1997
**Renewed:** 19-Mar-2018
**Bypass:** Febco 805YB 3/4" (H)
**Shutoffs:** (ff),mm,oo,pp,uu,zzz,cccc,ffff,gggg

---

**Type:** DCDA
**Manufacturer:** Febco
**Model:** 856
**Size:** 2 1/2
**Orientation:** VU
**Meters:** (M),B,C,D,E,F,G,H,I,J,K,L,N,O,P,Q,T
**Manual:** 8
**0.25% Pb:** No
**Spare Parts Only:** Yes
**Approved:** 05-Jan-2000
**Renewed:** 05-Jan-2017
**Bypass:** Febco 805YB 3/4" (VU)
**Shutoffs:** (ff),mm,oo,pp,uu,zzz,cccc,ffff,gggg

---

**Type:** DCDA
**Manufacturer:** Febco
**Model:** 856
**Size:** 3
**Orientation:** H
**Meters:** (M),B,C,D,E,F,G,H,I,J,K,L,N,O,P,Q,T
**Manual:** 8
**0.25% Pb:** No
**Spare Parts Only:** Yes
**Approved:** 19-Mar-1997
**Renewed:** 19-Mar-2018
**Bypass:** Febco 805YB 3/4" (H)
**Shutoffs:** (ff),mm,oo,pp,uu,zzz,cccc,ffff,gggg


2018 © University of Southern California

**Type:** DCDA
**Manufacturer:** Febco
**Model:** 856
**Size:** 3
**Orientation:** VU
**Meters:** (M),B,C,D,E,F,G,H,I,J,K,L,N,O,P,Q,T
**Manual:** 8
**0.25% Pb:** No
**Spare Parts Only:** Yes
**Approved:** 05-Jan-2000
**Renewed:** 05-Jan-2017
**Bypass:** Febco 805YB 3/4" (VU)
**Shutoffs:** (ff),mm,oo,pp,uu,zzz,cccc,ffff,gggg

---

**Type:** DCDA
**Manufacturer:** Febco
**Model:** 856
**Size:** 4
**Orientation:** H
**Meters:** (M),B,C,D,E,F,G,H,I,J,K,L,N,O,P,Q,T
**Manual:** 8
**0.25% Pb:** No
**Spare Parts Only:** Yes
**Approved:** 04-May-1994
**Renewed:** 04-May-2018
**Bypass:** Febco 805YB 3/4" (H)
**Shutoffs:** (ff),mm,oo,pp,uu,nnn,zzz,cccc,ffff,gggg

---

**Type:** DCDA
**Manufacturer:** Febco
**Model:** 856
**Size:** 4
**Orientation:** VU
**Meters:** (M),B,C,D,E,F,G,H,I,J,K,L,N,O,P,Q,T
**Manual:** 8
**0.25% Pb:** No
**Spare Parts Only:** Yes
**Approved:** 16-Apr-1996
**Renewed:** 16-Apr-2017
**Bypass:** Febco 805YB 3/4" (VU)
**Shutoffs:** (ff),mm,oo,pp,uu,nnn,zzz,cccc,ffff,gggg

---

**Type:** DCDA
**Manufacturer:** Febco
**Model:** 856
**Size:** 6
**Orientation:** H
**Meters:** (M),B,C,D,E,F,G,H,I,J,K,L,N,O,P,Q,T
**Manual:** 8
**0.25% Pb:** No
**Spare Parts Only:** Yes
**Approved:** 04-May-1994
**Renewed:** 04-May-2018
**Bypass:** Febco 805YB 3/4" (H)
**Shutoffs:** (ff),mm,oo,pp,uu,nnn,zzz,cccc,ffff,gggg

---

**Type:** DCDA
**Manufacturer:** Febco
**Model:** 856
**Size:** 6
**Orientation:** VU
**Meters:** (M),B,C,D,E,F,G,H,I,J,K,L,N,O,P,Q,T
**Manual:** 8
**0.25% Pb:** No
**Spare Parts Only:** Yes
**Approved:** 16-Apr-1996
**Renewed:** 16-Apr-2017
**Bypass:** Febco 805YB 3/4" (VU)
**Shutoffs:** (ff),mm,oo,pp,uu,nnn,zzz,cccc,ffff,gggg

---

**Type:** DCDA
**Manufacturer:** Febco
**Model:** 856
**Size:** 8
**Orientation:** H
**Meters:** (M),B,C,D,E,F,G,H,I,J,K,L,N,O,P,Q,T
**Manual:** 8
**0.25% Pb:** No
**Spare Parts Only:** Yes
**Approved:** 04-Oct-1995
**Renewed:** 04-Oct-2016
**Bypass:** Febco 805YB 3/4" (H)
**Shutoffs:** (ff),mm,oo,pp,uu,nnn,zzz,cccc,ffff,gggg

**Type:** DCDA
**Manufacturer:** Febco
**Model:** 856
**Size:** 8
**Orientation:** VU
**Meters:** (M),B,C,D,E,F,G,H,I,J,K,L,N,O,P,Q,T
**Manual:** 8
**0.25% Pb:** No
**Spare Parts Only:** Yes
**Approved:** 05-Jan-2000
**Renewed:** 05-Jan-2017
**Bypass:** Febco 805YB 3/4" (VU)
**Shutoffs:** (ff),mm,oo,pp,uu,nnn,zzz,cccc,ffff,gggg

---

**Type:** DCDA
**Manufacturer:** Febco
**Model:** 856ST
**Size:** 2 1/2
**Orientation:** H
**Meters:** (O),G,H,I,J,K,L,M,N,P,Q,T
**Manual:** 9
**0.25% Pb:** No
**Spare Parts Only:** Yes
**Approved:** 22-May-2012
**Renewed:** 22-May-2018
**Bypass:** Watts 719QT 3/4" (H)
**Shutoffs:** (ll),mm,oo,pp,zzz,cccc,dddd,eeee,ffff,gggg,nnnnn

---

**Type:** DCDA
**Manufacturer:** Febco
**Model:** 856ST
**Size:** 2 1/2
**Orientation:** VU
**Meters:** (O),G,H,I,J,K,L,M,N,P,Q,T
**Manual:** 9
**0.25% Pb:** No
**Spare Parts Only:** Yes
**Approved:** 22-May-2012
**Renewed:** 22-May-2018
**Bypass:** Watts 719QT 3/4" (VU)
**Shutoffs:** (ll),mm,oo,pp,zzz,cccc,dddd,eeee,ffff,gggg,nnnnn

---

**Type:** DCDA
**Manufacturer:** Febco
**Model:** 856ST
**Size:** 3
**Orientation:** H
**Meters:** (O),H,I,J,K,L,M,N,P,Q
**Manual:** 9
**0.25% Pb:** No
**Spare Parts Only:** Yes
**Approved:** 22-May-2012
**Renewed:** 22-May-2018
**Bypass:** Watts 719QT 3/4" (H)
**Shutoffs:** (ll),mm,oo,pp,zzz,cccc,dddd,eeee,ffff,gggg,nnnnn

---

**Type:** DCDA
**Manufacturer:** Febco
**Model:** 856ST
**Size:** 3
**Orientation:** VU
**Meters:** (O),H,I,J,K,L,M,N,P,Q
**Manual:** 9
**0.25% Pb:** No
**Spare Parts Only:** Yes
**Approved:** 22-May-2012
**Renewed:** 22-May-2018
**Bypass:** Watts 719QT 3/4" (VU)
**Shutoffs:** (ll),mm,oo,pp,zzz,cccc,dddd,eeee,ffff,gggg,nnnnn

---

**Type:** DCDA
**Manufacturer:** Febco
**Model:** 856ST
**Size:** 4
**Orientation:** H
**Meters:** (O),H,I,J,K,L,M,N,P,Q
**Manual:** 9
**0.25% Pb:** No
**Spare Parts Only:** Yes
**Approved:** 22-May-2012
**Renewed:** 22-May-2018
**Bypass:** Watts 719QT 3/4" (H)
**Shutoffs:** (ll),mm,oo,pp,zzz,cccc,dddd,eeee,ffff,gggg,nnnnn


2018 © University of Southern California

**Type:** DCDA **Manufacturer:** Febco **Model:** 856ST
**Size:** 4 **Orientation:** VU **Meters:** (O),H,I,J,K,L,M,N,P,Q
**Manual:** 9 **0.25% Pb:** No **Spare Parts Only:** Yes
**Approved:** 22-May-2012 **Renewed:** 22-May-2018 **Bypass:** Watts 719QT 3/4" (VU)
**Shutoffs:** (ll),mm,oo,pp,zzz,cccc,dddd,eeee,ffff,gggg,nnnnn

---

**Type:** DCDA **Manufacturer:** Febco **Model:** 856ST
**Size:** 6 **Orientation:** H **Meters:** (O),H,I,J,K,L,M,N,P,Q
**Manual:** 9 **0.25% Pb:** No **Spare Parts Only:** Yes
**Approved:** 22-May-2012 **Renewed:** 22-May-2018 **Bypass:** Watts 719QT 3/4" (H)
**Shutoffs:** (ll),mm,oo,pp,zzz,cccc,dddd,eeee,ffff,gggg,nnnnn

---

**Type:** DCDA **Manufacturer:** Febco **Model:** 856ST
**Size:** 6 **Orientation:** VU **Meters:** (O),H,I,J,K,L,M,N,P,Q
**Manual:** 9 **0.25% Pb:** No **Spare Parts Only:** Yes
**Approved:** 09-Aug-2012 **Renewed:** 09-Aug-2018 **Bypass:** Watts 719QT 3/4" (H)
**Shutoffs:** (ll),mm,oo,pp,zzz,cccc,dddd,eeee,ffff,gggg,nnnnn

---

**Type:** DCDA **Manufacturer:** Febco **Model:** 856ST
**Size:** 8 **Orientation:** H **Meters:** (O),H,I,J,K,L,M,N,P,Q
**Manual:** 9 **0.25% Pb:** No **Spare Parts Only:** Yes
**Approved:** 22-May-2012 **Renewed:** 22-May-2018 **Bypass:** Watts 719QT 3/4" (H)
**Shutoffs:** (ll),mm,oo,pp,zzz,cccc,dddd,eeee,ffff,gggg,nnnnn

---

**Type:** DCDA **Manufacturer:** Febco **Model:** 856ST
**Size:** 8 **Orientation:** VU **Meters:** (O),H,I,J,K,L,M,N,P,Q
**Manual:** 9 **0.25% Pb:** No **Spare Parts Only:** Yes
**Approved:** 09-Aug-2012 **Renewed:** 09-Aug-2018 **Bypass:** Watts 719QT 3/4" (H)
**Shutoffs:** (ll),mm,oo,pp,zzz,cccc,dddd,eeee,ffff,gggg,nnnnn

---

**Type:** DCDA **Manufacturer:** Febco **Model:** 856ST
**Size:** 10 **Orientation:** H **Meters:** (O),H,I,J,K,L,M,N,P,Q
**Manual:** 9 **0.25% Pb:** No **Spare Parts Only:** No
**Approved:** 03-Sep-2013 **Renewed:** 03-Sep-2016 **Bypass:** Watts 719QT 3/4" (H)
**Shutoffs:** (ll),mm,oo,pp,zzz,cccc,dddd,eeee,ffff,gggg,nnnnn

---

**Type:** DCDA **Manufacturer:** Febco **Model:** 856ST
**Size:** 10 **Orientation:** VU **Meters:** (O),H,I,J,K,L,M,N,P,Q
**Manual:** 9 **0.25% Pb:** No **Spare Parts Only:** No
**Approved:** 03-Sep-2013 **Renewed:** 03-Sep-2016 **Bypass:** Watts 719QT 3/4" (H)
**Shutoffs:** (ll),mm,oo,pp,zzz,cccc,dddd,eeee,ffff,gggg,nnnnn

**Type:** DCDA
**Manufacturer:** Febco
**Model:** 858
**Size:** 2
**Orientation:** H
**Meters:** (H),A,B,C,D,E,F,G,I,J,K,L,M,N,O,P,Q,T
**Manual:** 9
**0.25% Pb:** No
**Spare Parts Only:** Yes
**Approved:** 01-Aug-2006
**Renewed:** 01-Aug-2018
**Bypass:** Watts 007QT 1/2" (H)
**Shutoffs:** bbb,jjjj

---

**Type:** DCDA
**Manufacturer:** Febco
**Model:** 858
**Size:** 2
**Orientation:** VU
**Meters:** (H),A,B,C,D,E,F,G,I,J,K,L,M,N,O,P,Q,T
**Manual:** 9
**0.25% Pb:** No
**Spare Parts Only:** Yes
**Approved:** 01-Aug-2006
**Renewed:** 01-Aug-2018
**Bypass:** Watts 007QT 1/2" (VU)
**Shutoffs:** bbb,jjjj

---

**Type:** DCDA
**Manufacturer:** Febco
**Model:** 858
**Size:** 2 1/2
**Orientation:** H
**Meters:** (H),D,E,F,G,I,J,K,L,M,N,O,P,Q,T
**Manual:** 8
**0.25% Pb:** No
**Spare Parts Only:** Yes
**Approved:** 01-Aug-2006
**Renewed:** 01-Aug-2018
**Bypass:** Watts 007M2QT 3/4" (H), Watts 007M1QT 3/4" (H)
**Shutoffs:** (pp), gg, hh,ll, mm, oo, tt, uu, zz, fff

---

**Type:** DCDA
**Manufacturer:** Febco
**Model:** 858
**Size:** 2 1/2
**Orientation:** VU
**Meters:** (H),D,E,F,G,I,J,K,L,M,N,O,P,Q,T
**Manual:** 8
**0.25% Pb:** No
**Spare Parts Only:** Yes
**Approved:** 01-Aug-2006
**Renewed:** 01-Aug-2018
**Bypass:** Watts 007M2QT 3/4" (VU)
**Shutoffs:** (pp), gg, hh,ll, mm, oo, tt, uu, zz, fff

---

**Type:** DCDA
**Manufacturer:** Febco
**Model:** 858
**Size:** 3
**Orientation:** H
**Meters:** (H),D,E,F,G,I,J,K,L,M,N,O,P,Q,T
**Manual:** 8
**0.25% Pb:** No
**Spare Parts Only:** Yes
**Approved:** 01-Aug-2006
**Renewed:** 01-Aug-2018
**Bypass:** Watts 007M2QT 3/4" (H), Watts 007M1QT 3/4" (H)
**Shutoffs:** (pp), gg, hh,ll, mm, oo, tt, uu, zz, fff

---


2018 © University of Southern California

**Type:** DCDA
**Manufacturer:** Febco
**Model:** 876
**Size:** 2 1/2
**Orientation:** VUVD
**Meters:** (M),B,C,D,E,F,G,H,I,J,K,L,N,O,P,Q,T
**Manual:** 8
**0.25% Pb:** No
**Spare Parts Only:** Yes
**Approved:** 10-Mar-1995
**Renewed:** 10-Mar-2016
**Bypass:** Febco 805YB 3/4" (H)
**Shutoffs:** ff,mm,oo,pp,uu,cccc,zzz,ffff,gggg

---

**Type:** DCDA
**Manufacturer:** Febco
**Model:** 876
**Size:** 3
**Orientation:** VUVD
**Meters:** (M),B,C,D,E,F,G,H,I,J,K,L,N,O,P,Q,T
**Manual:** 8
**0.25% Pb:** No
**Spare Parts Only:** Yes
**Approved:** 10-Mar-1995
**Renewed:** 10-Mar-2016
**Bypass:** Febco 805YB 3/4" (H)
**Shutoffs:** ff,mm,oo,pp,uu,cccc,zzz,ffff,gggg

---

**Type:** DCDA
**Manufacturer:** Febco
**Model:** 876
**Size:** 4
**Orientation:** VUVD
**Meters:** (M),B,C,D,E,F,G,H,I,J,K,L,N,O,P,Q,T
**Manual:** 8
**0.25% Pb:** No
**Spare Parts Only:** Yes
**Approved:** 04-May-1994
**Renewed:** 04-May-2018
**Bypass:** Febco 805YB 3/4" (H)
**Shutoffs:** ff,mm,oo,pp,uu,cccc,zzz,ffff,gggg

---

**Type:** DCDA
**Manufacturer:** Febco
**Model:** 876
**Size:** 6
**Orientation:** VUVD
**Meters:** (M),B,C,D,E,F,G,H,I,J,K,L,N,O,P,Q,T
**Manual:** 8
**0.25% Pb:** No
**Spare Parts Only:** Yes
**Approved:** 04-May-1994
**Renewed:** 04-May-2018
**Bypass:** Febco 805YB 3/4" (H)
**Shutoffs:** ff,mm,oo,pp,uu,cccc,zzz,ffff,gggg

---

**Type:** DCDA
**Manufacturer:** Febco
**Model:** 876
**Size:** 8
**Orientation:** VUVD
**Meters:** (M),B,C,D,E,F,G,H,I,J,K,L,N,O,P,Q,T
**Manual:** 8
**0.25% Pb:** No
**Spare Parts Only:** Yes
**Approved:** 24-May-1995
**Renewed:** 24-May-2016
**Bypass:** Febco 805YB 3/4" (H)
**Shutoffs:** ff,mm,oo,pp,uu,cccc,zzz,ffff,gggg

---

**Type:** DCDA
**Manufacturer:** Febco
**Model:** 876
**Size:** 10
**Orientation:** VUVD
**Meters:** (M),B,C,D,E,F,G,H,I,J,K,L,N,O,P,Q,T
**Manual:** 8
**0.25% Pb:** No
**Spare Parts Only:** Yes
**Approved:** 04-Oct-1996
**Renewed:** 04-Oct-2017
**Bypass:** Febco 805YB 3/4" (H)
**Shutoffs:** ff,mm,oo,pp,uu,cccc,zzz,ffff,gggg

**Type:** DCDA
**Manufacturer:** Febco
**Model:** 876V
**Size:** 2 1/2
**Orientation:** VUVD
**Meters:** (M),B,C,D,E,F,G,H,I,J,K,L,N,O,P,Q,T
**Manual:** 8
**0.25% Pb:** No
**Spare Parts Only:** Yes
**Approved:** 08-Mar-1996
**Renewed:** 08-Mar-2017
**Bypass:** Febco 805YB 3/4" (H)
**Shutoffs:** (ff),ee,ll,mm,oo,pp,tt,uu,zzz,ffff,gggg

---

**Type:** DCDA
**Manufacturer:** Febco
**Model:** 876V
**Size:** 2 1/2
**Orientation:** VUVU
**Meters:** (M),B,C,D,E,F,G,H,I,J,K,L,N,O,P,Q,T
**Manual:** 8
**0.25% Pb:** No
**Spare Parts Only:** Yes
**Approved:** 08-Mar-1996
**Renewed:** 08-Mar-2017
**Bypass:** Febco 805YB 3/4" (H)
**Shutoffs:** (ff),ee,ll,mm,oo,pp,tt,uu,zzz,ffff,gggg

---

**Type:** DCDA
**Manufacturer:** Febco
**Model:** 876V
**Size:** 3
**Orientation:** VUVD
**Meters:** (M),B,C,D,E,F,G,H,I,J,K,L,N,O,P,Q,T
**Manual:** 8
**0.25% Pb:** No
**Spare Parts Only:** Yes
**Approved:** 08-Mar-1996
**Renewed:** 08-Mar-2017
**Bypass:** Febco 805YB 3/4" (H)
**Shutoffs:** (ff),ee,ll,mm,oo,pp,tt,uu,zzz,ffff,gggg

---

**Type:** DCDA
**Manufacturer:** Febco
**Model:** 876V
**Size:** 3
**Orientation:** VUVU
**Meters:** (M),B,C,D,E,F,G,H,I,J,K,L,N,O,P,Q,T
**Manual:** 8
**0.25% Pb:** No
**Spare Parts Only:** Yes
**Approved:** 08-Mar-1996
**Renewed:** 08-Mar-2017
**Bypass:** Febco 805YB 3/4" (H)
**Shutoffs:** (ff),ee,ll,mm,oo,pp,tt,uu,zzz,ffff,gggg

---

**Type:** DCDA
**Manufacturer:** Febco
**Model:** 876V
**Size:** 4
**Orientation:** VUVD
**Meters:** (M),B,C,D,E,F,G,H,I,J,K,L,N,O,P,Q,T
**Manual:** 8
**0.25% Pb:** No
**Spare Parts Only:** Yes
**Approved:** 08-Mar-1996
**Renewed:** 08-Mar-2017
**Bypass:** Febco 805YB 3/4" (H)
**Shutoffs:** (ff),ee,ll,mm,oo,pp,tt,uu,zzz,ffff,gggg

---

**Type:** DCDA
**Manufacturer:** Febco
**Model:** 876V
**Size:** 4
**Orientation:** VUVU
**Meters:** (M),B,C,D,E,F,G,H,I,J,K,L,N,O,P,Q,T
**Manual:** 8
**0.25% Pb:** No
**Spare Parts Only:** Yes
**Approved:** 08-Mar-1996
**Renewed:** 08-Mar-2017
**Bypass:** Febco 805YB 3/4" (H)
**Shutoffs:** (ff),ee,ll,mm,oo,pp,tt,uu,zzz,ffff,gggg


2018 © University of Southern California

**Type:** DCDA
**Manufacturer:** Febco
**Model:** 876V
**Size:** 6
**Orientation:** VUVD
**Meters:** (M),B,C,D,E,F,G,H,I,J,K,L,N,O,P,Q,T
**Manual:** 8
**0.25% Pb:** No
**Spare Parts Only:** Yes
**Approved:** 08-Mar-1996
**Renewed:** 08-Mar-2017
**Bypass:** Febco 805YB 3/4" (H)
**Shutoffs:** (ff),ee,ll,mm,oo,pp,tt,uu,zzz,ffff,gggg

---

**Type:** DCDA
**Manufacturer:** Febco
**Model:** 876V
**Size:** 6
**Orientation:** VUVU
**Meters:** (M),B,C,D,E,F,G,H,I,J,K,L,N,O,P,Q,T
**Manual:** 8
**0.25% Pb:** No
**Spare Parts Only:** Yes
**Approved:** 08-Mar-1996
**Renewed:** 08-Mar-2017
**Bypass:** Febco 805YB 3/4" (H)
**Shutoffs:** (ff),ee,ll,mm,oo,pp,tt,uu,zzz,ffff,gggg

---

**Type:** DCDA
**Manufacturer:** Febco
**Model:** 876V
**Size:** 8
**Orientation:** VUVD
**Meters:** (M),B,C,D,E,F,G,H,I,J,K,L,N,O,P,Q,T
**Manual:** 8
**0.25% Pb:** No
**Spare Parts Only:** Yes
**Approved:** 06-Jan-1997
**Renewed:** 06-Jan-2017
**Bypass:** Febco 805YB 3/4" (H)
**Shutoffs:** (ff),mm,oo,pp,uu,zzz,ffff,gggg

---

**Type:** DCDA
**Manufacturer:** Febco
**Model:** 876V
**Size:** 8
**Orientation:** VUVU
**Meters:** (M),B,C,D,E,F,G,H,I,J,K,L,N,O,P,Q,T
**Manual:** 8
**0.25% Pb:** No
**Spare Parts Only:** Yes
**Approved:** 06-Jan-1997
**Renewed:** 06-Jan-2017
**Bypass:** Febco 805YB 3/4" (H)
**Shutoffs:** (ff),mm,oo,pp,uu,zzz,ffff,gggg

---

**Type:** DCDA
**Manufacturer:** Febco
**Model:** 876V
**Size:** 10
**Orientation:** VUVD
**Meters:** (M),B,C,D,E,F,G,H,I,J,K,L,N,O,P,Q,T
**Manual:** 8
**0.25% Pb:** No
**Spare Parts Only:** Yes
**Approved:** 11-Jul-1997
**Renewed:** 11-Jul-2018
**Bypass:** Febco 805YB 3/4" (H)
**Shutoffs:** (ee),ff,ll,mm,oo,pp,tt,uu,zzz,ffff,gggg

---

**Type:** DCDA
**Manufacturer:** Febco
**Model:** 876V
**Size:** 10
**Orientation:** VUVU
**Meters:** (M),B,C,D,E,F,G,H,I,J,K,L,N,O,P,Q,T
**Manual:** 8
**0.25% Pb:** No
**Spare Parts Only:** Yes
**Approved:** 11-Jul-1997
**Renewed:** 11-Jul-2018
**Bypass:** Febco 805YB 3/4" (H)
**Shutoffs:** (ee),ff,ll,mm,oo,pp,tt,uu,zzz,ffff,gggg

**Type:** DCDA **Manufacturer:** Febco **Model:** 876VST
**Size:** 2 1/2 **Orientation:** VUVD **Meters:** (O),G,H,I,J,K,L,M,N,P,Q,T
**Manual:** 9 **0.25% Pb:** No **Spare Parts Only:** Yes
**Approved:** 22-May-2012 **Renewed:** 22-May-2018 **Bypass:** Watts 719QT 3/4" (H)
**Shutoffs:** (ll),mm,oo,pp,zzz,cccc,dddd,eeee,ffff,gggg,nnnnn

---

**Type:** DCDA **Manufacturer:** Febco **Model:** 876VST
**Size:** 2 1/2 **Orientation:** VUVU **Meters:** (O),G,H,I,J,K,L,M,N,P,Q,T
**Manual:** 9 **0.25% Pb:** No **Spare Parts Only:** Yes
**Approved:** 22-May-2012 **Renewed:** 22-May-2018 **Bypass:** Watts 719QT 3/4" (H)
**Shutoffs:** (ll),mm,oo,pp,zzz,cccc,dddd,eeee,ffff,gggg,nnnnn

---

**Type:** DCDA **Manufacturer:** Febco **Model:** 876VST
**Size:** 3 **Orientation:** VUVD **Meters:** (O),H,I,J,K,L,M,N,P,Q
**Manual:** 9 **0.25% Pb:** No **Spare Parts Only:** Yes
**Approved:** 22-May-2012 **Renewed:** 22-May-2018 **Bypass:** Watts 719QT 3/4" (H)
**Shutoffs:** (ll),mm,oo,pp,zzz,cccc,dddd,eeee,ffff,gggg,nnnnn

---

**Type:** DCDA **Manufacturer:** Febco **Model:** 876VST
**Size:** 3 **Orientation:** VUVU **Meters:** (O),H,I,J,K,L,M,N,P,Q
**Manual:** 9 **0.25% Pb:** No **Spare Parts Only:** Yes
**Approved:** 22-May-2012 **Renewed:** 22-May-2018 **Bypass:** Watts 719QT 3/4" (H)
**Shutoffs:** (ll),mm,oo,pp,zzz,cccc,dddd,eeee,ffff,gggg,nnnnn

---

**Type:** DCDA **Manufacturer:** Febco **Model:** 876VST
**Size:** 4 **Orientation:** VUVD **Meters:** (O),H,I,J,K,L,M,N,P,Q
**Manual:** 9 **0.25% Pb:** No **Spare Parts Only:** Yes
**Approved:** 22-May-2012 **Renewed:** 22-May-2018 **Bypass:** Watts 719QT 3/4" (H)
**Shutoffs:** (ll),mm,oo,pp,zzz,cccc,dddd,eeee,ffff,gggg,nnnnn

---

**Type:** DCDA **Manufacturer:** Febco **Model:** 876VST
**Size:** 4 **Orientation:** VUVU **Meters:** (O),H,I,J,K,L,M,N,P,Q
**Manual:** 9 **0.25% Pb:** No **Spare Parts Only:** Yes
**Approved:** 22-May-2012 **Renewed:** 22-May-2018 **Bypass:** Watts 719QT 3/4" (H)
**Shutoffs:** (ll),mm,oo,pp,zzz,cccc,dddd,eeee,ffff,gggg,nnnnn

---

**Type:** DCDA **Manufacturer:** Febco **Model:** 876VST
**Size:** 6 **Orientation:** VUVD **Meters:** (O),H,I,J,K,L,M,N,P,Q
**Manual:** 9 **0.25% Pb:** No **Spare Parts Only:** Yes
**Approved:** 22-May-2012 **Renewed:** 22-May-2018 **Bypass:** Watts 719QT 3/4" (H)
**Shutoffs:** (ll),mm,oo,pp,zzz,cccc,dddd,eeee,ffff,gggg,nnnnn


2018 © University of Southern California

**Type:** DCDA
**Manufacturer:** Febco
**Model:** 876VST
**Size:** 6
**Orientation:** VUVU
**Meters:** (O),H,I,J,K,L,M,N,P,Q
**Manual:** 9
**0.25% Pb:** No
**Spare Parts Only:** Yes
**Approved:** 22-May-2012
**Renewed:** 22-May-2018
**Bypass:** Watts 719QT 3/4" (H)
**Shutoffs:** (ll),mm,oo,pp,zzz,cccc,dddd,eeee,ffff,gggg,nnnnn

---

**Type:** DCDA
**Manufacturer:** Febco
**Model:** 876VST
**Size:** 8
**Orientation:** VUVD
**Meters:** (O),H,I,J,K,L,M,N,P,Q
**Manual:** 9
**0.25% Pb:** No
**Spare Parts Only:** Yes
**Approved:** 22-May-2012
**Renewed:** 22-May-2018
**Bypass:** Watts 719QT 3/4" (H)
**Shutoffs:** (ll),mm,oo,pp,zzz,cccc,dddd,eeee,ffff,gggg,nnnnn

---

**Type:** DCDA
**Manufacturer:** Febco
**Model:** 876VST
**Size:** 8
**Orientation:** VUVU
**Meters:** (O),H,I,J,K,L,M,N,P,Q
**Manual:** 9
**0.25% Pb:** No
**Spare Parts Only:** Yes
**Approved:** 22-May-2012
**Renewed:** 22-May-2018
**Bypass:** Watts 719QT 3/4" (H)
**Shutoffs:** (ll),mm,oo,pp,zzz,cccc,dddd,eeee,ffff,gggg,nnnnn

---

**Type:** DCDA
**Manufacturer:** Watts
**Model:** 007DCDA
**Size:** 2
**Orientation:** H
**Meters:** (H),A,B,C,D,E,F,G,I,J,K,L,M,N,O,P,Q,T
**Manual:** 9
**0.25% Pb:** No
**Spare Parts Only:** Yes
**Approved:** 16-Jun-1997
**Renewed:** 16-Jun-2018
**Bypass:** Watts 007QT 1/2" (H)
**Shutoffs:** (bbb),jjjj,rrrrr
**Notes:** Previously Approved 8th Ed. (19 Apr 1996)

---

**Type:** DCDA
**Manufacturer:** Watts
**Model:** 007DCDA
**Size:** 2
**Orientation:** VU
**Meters:** (H),A,B,C,D,E,F,G,I,J,K,L,M,N,O,P,Q,T
**Manual:** 9
**0.25% Pb:** No
**Spare Parts Only:** Yes
**Approved:** 16-Jun-1997
**Renewed:** 16-Jun-2018
**Bypass:** Watts 007QT 1/2" (VU)
**Shutoffs:** (bbb),jjjj,rrrrr
**Notes:** Previously Approved 8th Ed. (10 Sept 1996)

---

**Type:** DCDA
**Manufacturer:** Watts
**Model:** 007DCDA
**Size:** 2 1/2
**Orientation:** H
**Meters:** (H),D,E,F,G,I,J,K,L,M,N,O,P,Q,T
**Manual:** 8
**0.25% Pb:** No
**Spare Parts Only:** No
**Approved:** 11-Oct-1993
**Renewed:** 11-Oct-2017
**Bypass:** Watts 007M2QT 3/4" (H), Watts 007M1QT 3/4" (H)
**Shutoffs:** (pp),gg,hh,ll,mm,oo,tt,uu,zz,ffff,gggg

**Type:** DCDA
**Manufacturer:** Watts
**Model:** 007DCDA
**Size:** 2 1/2
**Orientation:** VU
**Meters:** (H),D,E,F,G,I,J,K,L,M,N,O,P,Q,T
**Manual:** 8
**0.25% Pb:** No
**Spare Parts Only:** No
**Approved:** 27-Aug-1996
**Renewed:** 27-Aug-2017
**Bypass:** Watts 007M2QT 3/4" (VU)
**Shutoffs:** (pp),gg,hh,ll,mm,oo,tt,uu,zz,ffff,gggg

---

**Type:** DCDA
**Manufacturer:** Watts
**Model:** 007DCDA
**Size:** 3
**Orientation:** H
**Meters:** (H),D,E,F,G,I,J,K,L,M,N,O,P,Q,T
**Manual:** 8
**0.25% Pb:** No
**Spare Parts Only:** No
**Approved:** 19-Sep-1992
**Renewed:** 19-Sep-2016
**Bypass:** Watts 007M2QT 3/4" (H), Watts 007M1QT 3/4" (H)
**Shutoffs:** (pp),hh,mm,uu,zz,ffff,gggg

---

**Type:** DCDA
**Manufacturer:** Watts
**Model:** 007DCDA-FP
**Size:** 2
**Orientation:** H
**Meters:** (H),A,B,C,D,E,F,G,I,J,K,L,M,N,O,P,Q,T
**Manual:** 9
**0.25% Pb:** No
**Spare Parts Only:** No
**Approved:** 01-Sep-2009
**Renewed:** 01-Sep-2018
**Bypass:** Ames 2000B 1/2" (H), Watts 007QT 1/2" (H)
**Shutoffs:** (eeeee)

---

**Type:** DCDA
**Manufacturer:** Watts
**Model:** 007M1DCDA
**Size:** 2
**Orientation:** H
**Meters:** (H),A,B,C,D,E,F,G,I,J,K,L,M,N,O,P,Q,T
**Manual:** 9
**0.25% Pb:** No
**Spare Parts Only:** No
**Approved:** 19-Jun-2015
**Renewed:** 19-Jun-2018
**Bypass:** Watts 007QT 1/2" (H)
**Shutoffs:** (eeeee), bbb, jjjj,rrrrr

---

**Type:** DCDA
**Manufacturer:** Watts
**Model:** 007M1DCDA
**Size:** 2
**Orientation:** VU
**Meters:** (H),A,B,C,D,E,F,G,I,J,K,L,M,N,O,P,Q,T
**Manual:** 9
**0.25% Pb:** No
**Spare Parts Only:** No
**Approved:** 19-Jun-2015
**Renewed:** 19-Jun-2018
**Bypass:** Watts 007QT 1/2" (VU)
**Shutoffs:** (eeeee), bbb, jjjj,rrrrr


2018 © University of Southern California

**Type:** DCDA
**Manufacturer:** Watts
**Model:** 709DCDA
**Size:** 3
**Orientation:** H
**Meters:** (N),B,C,D,E,F,G,H,I,J,K,L,M,O,P,Q,T
**Manual:** 6
**0.25% Pb:** No
**Spare Parts Only:** No
**Approved:** 19-Apr-1987
**Renewed:** 19-Apr-2017
**Bypass:** Watts 007QT 1/2" (H), Watts 007M1QT 3/4" (H), Watts 709QT 3/4" (H)
**Shutoffs:** (pp),hh,uu,zz,eee,ffff,gggg
**Notes:** formerly 709DDC

---

**Type:** DCDA
**Manufacturer:** Watts
**Model:** 709DCDA
**Size:** 4
**Orientation:** H
**Meters:** (N),A,B,C,D,E,F,G,H,I,J,K,L,M,O,P,Q,T
**Manual:** 6
**0.25% Pb:** No
**Spare Parts Only:** No
**Approved:** 27-Jul-1987
**Renewed:** 27-Jul-2017
**Bypass:** Watts 007QT 1/2" (H), Watts 007M1QT 3/4" (H), Watts 709QT 3/4" (H)
**Shutoffs:** (pp),hh,uu,zz,eee,ffff,gggg
**Notes:** formerly 709DDC

---

**Type:** DCDA
**Manufacturer:** Watts
**Model:** 709DCDA
**Size:** 4
**Orientation:** VU
**Meters:** (N),A,B,C,D,E,F,G,H,I,J,K,L,M,O,P,Q,T
**Manual:** 8
**0.25% Pb:** No
**Spare Parts Only:** No
**Approved:** 27-Aug-1996
**Renewed:** 27-Aug-2017
**Bypass:** Watts 007QT 1/2" (VU), Watts 007M2QT 3/4" (VU)
**Shutoffs:** (pp),hh,uu,zz,eee,ffff,gggg
**Notes:** formerly 709DDC

---

**Type:** DCDA
**Manufacturer:** Watts
**Model:** 709DCDA
**Size:** 6
**Orientation:** H
**Meters:** (N),A,B,C,D,E,F,G,H,I,J,K,L,M,O,P,Q,T
**Manual:** 6
**0.25% Pb:** No
**Spare Parts Only:** No
**Approved:** 27-Jul-1987
**Renewed:** 27-Jul-2017
**Bypass:** Watts 007QT 1/2" (H), Watts 007M1QT 3/4" (H), Watts 709QT 3/4" (H)
**Shutoffs:** (pp),hh,uu,zz,eee,ffff,gggg
**Notes:** formerly 709DDC

**Type:** DCDA
**Manufacturer:** Watts
**Model:** 709DCDA
**Size:** 6
**Orientation:** VU
**Meters:** (H),A,B,C,D,E,F,G,I,J,K,L,M,N,O,P,Q,T
**Manual:** 8
**0.25% Pb:** No
**Spare Parts Only:** No
**Approved:** 05-Dec-1996
**Renewed:** 05-Dec-2017
**Bypass:** Watts 007QT 1/2" (VU)
**Shutoffs:** (pp),hh,mm,uu,zz,eee,ffff,gggg

---

**Type:** DCDA
**Manufacturer:** Watts
**Model:** 709DCDA
**Size:** 8
**Orientation:** H
**Meters:** (N),A,B,C,D,E,F,G,H,I,J,K,L,M,O,P,Q,T
**Manual:** 6
**0.25% Pb:** No
**Spare Parts Only:** No
**Approved:** 19-Apr-1987
**Renewed:** 19-Apr-2017
**Bypass:** Watts 007QT 1/2" (H), Watts 007M1QT 3/4" (H), Watts 709QT 3/4" (H)
**Shutoffs:** (pp),hh,mm,uu,zz,eee,ffff,gggg
**Notes:** formerly 709DDC

---

**Type:** DCDA
**Manufacturer:** Watts
**Model:** 709DCDA
**Size:** 8
**Orientation:** VU
**Meters:** (H),A,B,C,D,E,F,G,I,J,K,L,M,N,O,P,Q,T
**Manual:** 8
**0.25% Pb:** No
**Spare Parts Only:** No
**Approved:** 05-Dec-1996
**Renewed:** 05-Dec-2017
**Bypass:** Watts 007QT 1/2" (VU)
**Shutoffs:** (pp),hh,mm,uu,zz,eee,ffff,gggg

---

**Type:** DCDA
**Manufacturer:** Watts
**Model:** 709DCDA
**Size:** 10
**Orientation:** H
**Meters:** (N),E,F,G,H,I,J,K,L,M,O,P,Q,T
**Manual:** 6
**0.25% Pb:** No
**Spare Parts Only:** No
**Approved:** 27-Jul-1987
**Renewed:** 27-Jul-2017
**Bypass:** Watts 007QT 1/2" (H), Watts 007M1QT 3/4" (H), Watts 709QT 3/4" (H)
**Shutoffs:** (pp),hh,mm,uu,zz,eee,ffff,gggg
**Notes:** formerly 709DDC

---

**Type:** DCDA
**Manufacturer:** Watts
**Model:** 709DCDA
**Size:** 10
**Orientation:** VU
**Meters:** (H),A,B,C,D,E,F,G,I,J,K,L,M,N,O,P,Q,T
**Manual:** 8
**0.25% Pb:** No
**Spare Parts Only:** No
**Approved:** 05-Dec-1996
**Renewed:** 05-Dec-2017
**Bypass:** Watts 007QT 1/2" (VU)
**Shutoffs:** (pp),hh,mm,uu,zz,eee,ffff,gggg


2018 © University of Southern California

**Type:** DCDA
**Manufacturer:** Watts
**Model:** 709DDC
**Size:** 3
**Orientation:**
**Meters:**
**Manual:**
**0.25% Pb:** No
**Spare Parts Only:** No
**Approved:**
**Renewed:**
**Bypass:**
**Notes:** model designation changed to 709DCDA

---

**Type:** DCDA
**Manufacturer:** Watts
**Model:** 709DDC
**Size:** 4
**Orientation:**
**Meters:**
**Manual:**
**0.25% Pb:** No
**Spare Parts Only:** No
**Approved:**
**Renewed:**
**Bypass:**
**Notes:** model designation changed to 709DCDA

---

**Type:** DCDA
**Manufacturer:** Watts
**Model:** 709DDC
**Size:** 4
**Orientation:**
**Meters:**
**Manual:**
**0.25% Pb:** No
**Spare Parts Only:** No
**Approved:**
**Renewed:**
**Bypass:**
**Notes:** model designation changed to 709DCDA

---

**Type:** DCDA
**Manufacturer:** Watts
**Model:** 709DDC
**Size:** 6
**Orientation:**
**Meters:**
**Manual:**
**0.25% Pb:** No
**Spare Parts Only:** No
**Approved:**
**Renewed:**
**Bypass:**
**Notes:** model designation changed to 709DCDA

---

**Type:** DCDA
**Manufacturer:** Watts
**Model:** 709DDC
**Size:** 8
**Orientation:**
**Meters:**
**Manual:**
**0.25% Pb:** No
**Spare Parts Only:** No
**Approved:**
**Renewed:**
**Bypass:**
**Notes:** model designation changed to 709DCDA

---

**Type:** DCDA
**Manufacturer:** Watts
**Model:** 709DDC
**Size:** 10
**Orientation:**
**Meters:**
**Manual:**
**0.25% Pb:** No
**Spare Parts Only:** No
**Approved:**
**Renewed:**
**Bypass:**
**Notes:** model designation changed to 709DCDA

---

**Type:** DCDA
**Manufacturer:** Watts
**Model:** 757aDCDABF
**Size:** 2 1/2
**Orientation:** H
**Meters:** (N),G,H,I,J,K,L,M,O,P,Q,T
**Manual:** 9
**0.25% Pb:** No
**Spare Parts Only:** No
**Approved:** 06-Nov-2003
**Renewed:** 06-Nov-2015
**Bypass:** Watts 007M3QT 3/4" (H)
**Shutoffs:** (yyy)

**Type:** DCDA
**Size:** 2 1/2
**Manual:** 9
**Approved:** 06-Nov-2003
**Shutoffs:** (yyy)
**Manufacturer:** Watts
**Orientation:** VU
**0.25% Pb:** No
**Renewed:** 06-Nov-2015
**Model:** 757aDCDABF
**Meters:** (N),G,H,I,J,K,L,M,O,P,Q,T
**Spare Parts Only:** No
**Bypass:** Watts 007M3QT 3/4" (VU)

---

**Type:** DCDA
**Size:** 3
**Manual:** 9
**Approved:** 06-Nov-2003
**Shutoffs:** (yyy)
**Manufacturer:** Watts
**Orientation:** H
**0.25% Pb:** No
**Renewed:** 06-Nov-2015
**Model:** 757aDCDABF
**Meters:** (N),G,H,I,J,K,L,M,O,P,Q,T
**Spare Parts Only:** No
**Bypass:** Watts 007M3QT 3/4" (H)

---

**Type:** DCDA
**Size:** 3
**Manual:** 9
**Approved:** 06-Nov-2003
**Shutoffs:** (yyy)
**Manufacturer:** Watts
**Orientation:** VU
**0.25% Pb:** No
**Renewed:** 06-Nov-2015
**Model:** 757aDCDABF
**Meters:** (N),G,H,I,J,K,L,M,O,P,Q,T
**Spare Parts Only:** No
**Bypass:** Watts 007M3QT 3/4" (VU)

---

**Type:** DCDA
**Size:** 4
**Manual:** 9
**Approved:** 06-Nov-2003
**Shutoffs:** (yyy)
**Manufacturer:** Watts
**Orientation:** H
**0.25% Pb:** No
**Renewed:** 06-Nov-2015
**Model:** 757aDCDABF
**Meters:** (N),G,H,I,J,K,L,M,O,P,Q,T
**Spare Parts Only:** No
**Bypass:** Watts 007M3QT 3/4" (H)

---

**Type:** DCDA
**Size:** 4
**Manual:** 9
**Approved:** 06-Nov-2003
**Shutoffs:** (yyy)
**Manufacturer:** Watts
**Orientation:** VU
**0.25% Pb:** No
**Renewed:** 06-Nov-2015
**Model:** 757aDCDABF
**Meters:** (N),G,H,I,J,K,L,M,O,P,Q,T
**Spare Parts Only:** No
**Bypass:** Watts 007M3QT 3/4" (VU)

---

**Type:** DCDA
**Size:** 6
**Manual:** 9
**Approved:** 03-Nov-2004
**Shutoffs:** (yyy)
**Manufacturer:** Watts
**Orientation:** H
**0.25% Pb:** No
**Renewed:** 03-Nov-2016
**Model:** 757aDCDABF
**Meters:** (N),G,H,I,J,K,L,M,O,P,Q,T
**Spare Parts Only:** No
**Bypass:** Watts 007M3QT 3/4 (H)

---

**Type:** DCDA
**Size:** 6
**Manual:** 9
**Approved:** 18-Jan-2005
**Shutoffs:** (yyy)
**Manufacturer:** Watts
**Orientation:** VU
**0.25% Pb:** No
**Renewed:** 18-Jan-2017
**Model:** 757aDCDABF
**Meters:** (N),G,H,I,J,K,L,M,O,P,Q,T
**Spare Parts Only:** No
**Bypass:** Watts 007M3QT 3/4" (VU)


2018 © University of Southern California

**Type:** DCDA
**Size:** 2 1/2
**Manual:** 9
**Approved:** 06-Nov-2003
**Shutoffs:** (zzz)
**Manufacturer:** Watts
**Orientation:** H
**0.25% Pb:** No
**Renewed:** 06-Nov-2015
**Model:** 757aDCDAGV
**Meters:** (N),G,H,I,J,K,L,M,O,P,Q,T
**Spare Parts Only:** No
**Bypass:** Watts 007M3QT 3/4" (H)

---

**Type:** DCDA
**Size:** 2 1/2
**Manual:** 9
**Approved:** 06-Nov-2003
**Shutoffs:** (zzz)
**Manufacturer:** Watts
**Orientation:** VU
**0.25% Pb:** No
**Renewed:** 06-Nov-2015
**Model:** 757aDCDAGV
**Meters:** (N),G,H,I,J,K,L,M,O,P,Q,T
**Spare Parts Only:** No
**Bypass:** Watts 007M3QT 3/4" (VU)

---

**Type:** DCDA
**Size:** 3
**Manual:** 9
**Approved:** 06-Nov-2003
**Shutoffs:** (zzz)
**Manufacturer:** Watts
**Orientation:** H
**0.25% Pb:** No
**Renewed:** 06-Nov-2015
**Model:** 757aDCDAGV
**Meters:** (N),G,H,I,J,K,L,M,O,P,Q,T
**Spare Parts Only:** No
**Bypass:** Watts 007M3QT 3/4" (H)

---

**Type:** DCDA
**Size:** 3
**Manual:** 9
**Approved:** 06-Nov-2003
**Shutoffs:** (zzz)
**Manufacturer:** Watts
**Orientation:** VU
**0.25% Pb:** No
**Renewed:** 06-Nov-2015
**Model:** 757aDCDAGV
**Meters:** (N),G,H,I,J,K,L,M,O,P,Q,T
**Spare Parts Only:** No
**Bypass:** Watts 007M3QT 3/4" (VU)

---

**Type:** DCDA
**Size:** 4
**Manual:** 9
**Approved:** 06-Nov-2003
**Shutoffs:** (zzz)
**Manufacturer:** Watts
**Orientation:** H
**0.25% Pb:** No
**Renewed:** 06-Nov-2015
**Model:** 757aDCDAGV
**Meters:** (N),G,H,I,J,K,L,M,O,P,Q,T
**Spare Parts Only:** No
**Bypass:** Watts 007M3QT 3/4" (H)

---

**Type:** DCDA
**Size:** 4
**Manual:** 9
**Approved:** 06-Nov-2003
**Shutoffs:** (zzz)
**Manufacturer:** Watts
**Orientation:** VU
**0.25% Pb:** No
**Renewed:** 06-Nov-2015
**Model:** 757aDCDAGV
**Meters:** (N),G,H,I,J,K,L,M,O,P,Q,T
**Spare Parts Only:** No
**Bypass:** Watts 007M3QT 3/4" (VU)

---

**Type:** DCDA
**Size:** 6
**Manual:** 9
**Approved:** 18-Jan-2005
**Shutoffs:** (zzz)
**Manufacturer:** Watts
**Orientation:** H
**0.25% Pb:** No
**Renewed:** 18-Jan-2017
**Model:** 757aDCDAGV
**Meters:** (N),G,H,I,J,K,L,M,O,P,Q,T
**Spare Parts Only:** No
**Bypass:** Watts 007M3QT 3/4" (VU)

**Type:** DCDA
**Size:** 6
**Manual:** 9
**Approved:** 18-Jan-2005
**Shutoffs:** (zzz)
**Manufacturer:** Watts
**Orientation:** VU
**0.25% Pb:** No
**Renewed:** 18-Jan-2017
**Model:** 757aDCDAGV
**Meters:** (N),G,H,I,J,K,L,M,O,P,Q,T
**Spare Parts Only:** No
**Bypass:** Watts 007M3QT 3/4" (VU)

---

**Type:** DCDA
**Size:** 2 1/2
**Manual:** 9
**Approved:** 04-Oct-2005
**Shutoffs:** (yyy)
**Manufacturer:** Watts
**Orientation:** H
**0.25% Pb:** No
**Renewed:** 04-Oct-2017
**Model:** 757DCDABF
**Meters:** (N),G,H,I,J,K,L,M,O,P,Q,T
**Spare Parts Only:** No
**Bypass:** Watts 007M3QT 3/4" (H)

---

**Type:** DCDA
**Size:** 2 1/2
**Manual:** 9
**Approved:** 04-Oct-2005
**Shutoffs:** (yyy)
**Manufacturer:** Watts
**Orientation:** VU
**0.25% Pb:** No
**Renewed:** 04-Oct-2017
**Model:** 757DCDABF
**Meters:** (N),G,H,I,J,K,L,M,O,P,Q,T
**Spare Parts Only:** No
**Bypass:** Watts 007M3QT 3/4" (V)

---

**Type:** DCDA
**Size:** 3
**Manual:** 9
**Approved:** 04-Oct-2005
**Shutoffs:** (yyy)
**Manufacturer:** Watts
**Orientation:** H
**0.25% Pb:** No
**Renewed:** 04-Oct-2017
**Model:** 757DCDABF
**Meters:** (N),G,H,I,J,K,L,M,O,P,Q,T
**Spare Parts Only:** No
**Bypass:** Watts 007M3QT 3/4" (H)

---

**Type:** DCDA
**Size:** 3
**Manual:** 9
**Approved:** 04-Oct-2005
**Shutoffs:** (yyy)
**Manufacturer:** Watts
**Orientation:** VU
**0.25% Pb:** No
**Renewed:** 04-Oct-2017
**Model:** 757DCDABF
**Meters:** (N),G,H,I,J,K,L,M,O,P,Q,T
**Spare Parts Only:** No
**Bypass:** Watts 007M3QT 3/4" (V)

---

**Type:** DCDA
**Size:** 4
**Manual:** 9
**Approved:** 04-Oct-2005
**Shutoffs:** (yyy)
**Manufacturer:** Watts
**Orientation:** H
**0.25% Pb:** No
**Renewed:** 04-Oct-2017
**Model:** 757DCDABF
**Meters:** (N),G,H,I,J,K,L,M,O,P,Q,T
**Spare Parts Only:** No
**Bypass:** Watts 007M3QT 3/4" (H)

---

**Type:** DCDA
**Size:** 4
**Manual:** 9
**Approved:** 04-Oct-2005
**Shutoffs:** (yyy)
**Manufacturer:** Watts
**Orientation:** VU
**0.25% Pb:** No
**Renewed:** 04-Oct-2017
**Model:** 757DCDABF
**Meters:** (N),G,H,I,J,K,L,M,O,P,Q,T
**Spare Parts Only:** No
**Bypass:** Watts 007M3QT 3/4" (V)


2018 © University of Southern California

**Type:** DCDA
**Size:** 6
**Manual:** 9
**Approved:** 19-Mar-2007
**Shutoffs:** (yyy)

**Manufacturer:** Watts
**Orientation:** H
**0.25% Pb:** No
**Renewed:** 23-Mar-2016

**Model:** 757DCDABF
**Meters:** (N),G,H,I,J,K,L,M,O,P,Q,T
**Spare Parts Only:** No
**Bypass:** Watts 007M3QT 3/4" (H )

---

**Type:** DCDA
**Size:** 6
**Manual:** 9
**Approved:** 19-Mar-2007
**Shutoffs:** (yyy)

**Manufacturer:** Watts
**Orientation:** VU
**0.25% Pb:** No
**Renewed:** 23-Mar-2016

**Model:** 757DCDABF
**Meters:** (N),G,H,I,J,K,L,M,O,P,Q,T
**Spare Parts Only:** No
**Bypass:** Watts 007M3QT 3/4" (VU)

---

**Type:** DCDA
**Size:** 8
**Manual:** 9
**Approved:** 09-Mar-2007
**Shutoffs:** (yyy)

**Manufacturer:** Watts
**Orientation:** H
**0.25% Pb:** No
**Renewed:** 09-Mar-2016

**Model:** 757DCDABF
**Meters:** (N),G,H,I,J,K,L,M,O,P,Q,T
**Spare Parts Only:** No
**Bypass:** Watts 007M3QT 3/4" (H & VU)

---

**Type:** DCDA
**Size:** 8
**Manual:** 9
**Approved:** 09-Mar-2007
**Shutoffs:** (yyy)

**Manufacturer:** Watts
**Orientation:** VU
**0.25% Pb:** No
**Renewed:** 09-Mar-2016

**Model:** 757DCDABF
**Meters:** (N),G,H,I,J,K,L,M,O,P,Q,T
**Spare Parts Only:** No
**Bypass:** Watts 007M3QT 3/4" (H & VU)

---

**Type:** DCDA
**Size:** 10
**Manual:** 9
**Approved:** 17-Sep-2009
**Shutoffs:** (yyy)

**Manufacturer:** Watts
**Orientation:** H
**0.25% Pb:** No
**Renewed:** 17-Sep-2018

**Model:** 757DCDABF
**Meters:** (N),G,H,I,J,K,L,M,O,P,Q,T
**Spare Parts Only:** No
**Bypass:** Watts 007M3QT 3/4" (H), Ames 2000 BM3 (H)

---

**Type:** DCDA
**Size:** 10
**Manual:** 9
**Approved:** 17-Sep-2009
**Shutoffs:** (yyy)

**Manufacturer:** Watts
**Orientation:** VU
**0.25% Pb:** No
**Renewed:** 17-Sep-2018

**Model:** 757DCDABF
**Meters:** (N),G,H,I,J,K,L,M,O,P,Q,T
**Spare Parts Only:** No
**Bypass:** Watts 007M3QT 3/4" (V), Ames 2000 BM3 (V)

**Type:** DCDA
**Size:** 2 1/2
**Manual:** 9
**Approved:** 04-Oct-2005
**Shutoffs:** (zzz)
**Manufacturer:** Watts
**Orientation:** H
**0.25% Pb:** No
**Renewed:** 04-Oct-2017
**Model:** 757DCDAGV
**Meters:** (N),G,H,I,J,K,L,M,O,P,Q,T
**Spare Parts Only:** No
**Bypass:** Watts 007M3QT 3/4" (H)

---

**Type:** DCDA
**Size:** 2 1/2
**Manual:** 9
**Approved:** 04-Oct-2005
**Shutoffs:** (zzz)
**Manufacturer:** Watts
**Orientation:** VU
**0.25% Pb:** No
**Renewed:** 04-Oct-2017
**Model:** 757DCDAGV
**Meters:** (N),G,H,I,J,K,L,M,O,P,Q,T
**Spare Parts Only:** No
**Bypass:** Watts 007M3QT 3/4" (V)

---

**Type:** DCDA
**Size:** 3
**Manual:** 9
**Approved:** 04-Oct-2005
**Shutoffs:** (zzz)
**Manufacturer:** Watts
**Orientation:** H
**0.25% Pb:** No
**Renewed:** 04-Oct-2017
**Model:** 757DCDAGV
**Meters:** (N),G,H,I,J,K,L,M,O,P,Q,T
**Spare Parts Only:** No
**Bypass:** Watts 007M3QT 3/4" (H)

---

**Type:** DCDA
**Size:** 3
**Manual:** 9
**Approved:** 04-Oct-2005
**Shutoffs:** (zzz)
**Manufacturer:** Watts
**Orientation:** VU
**0.25% Pb:** No
**Renewed:** 04-Oct-2017
**Model:** 757DCDAGV
**Meters:** (N),G,H,I,J,K,L,M,O,P,Q,T
**Spare Parts Only:** No
**Bypass:** Watts 007M3QT 3/4" (V)

---

**Type:** DCDA
**Size:** 4
**Manual:** 9
**Approved:** 04-Oct-2005
**Shutoffs:** (zzz)
**Manufacturer:** Watts
**Orientation:** H
**0.25% Pb:** No
**Renewed:** 04-Oct-2017
**Model:** 757DCDAGV
**Meters:** (N),G,H,I,J,K,L,M,O,P,Q,T
**Spare Parts Only:** No
**Bypass:** Watts 007M3QT 3/4" (H)

---

**Type:** DCDA
**Size:** 4
**Manual:** 9
**Approved:** 04-Oct-2005
**Shutoffs:** (zzz)
**Manufacturer:** Watts
**Orientation:** VU
**0.25% Pb:** No
**Renewed:** 04-Oct-2017
**Model:** 757DCDAGV
**Meters:** (N),G,H,I,J,K,L,M,O,P,Q,T
**Spare Parts Only:** No
**Bypass:** Watts 007M3QT 3/4" (V)

---

**Type:** DCDA
**Size:** 6
**Manual:** 9
**Approved:** 19-Mar-2007
**Shutoffs:** (zzz)
**Manufacturer:** Watts
**Orientation:** H
**0.25% Pb:** No
**Renewed:** 23-Mar-2016
**Model:** 757DCDAGV
**Meters:** (N),G,H,I,J,K,L,M,O,P,Q,T
**Spare Parts Only:** No
**Bypass:** Watts 007M3QT 3/4" (H )


2018 © University of Southern California

**Type:** DCDA
**Size:** 6
**Manual:** 9
**Approved:** 19-Mar-2007
**Shutoffs:** (zzz)
**Manufacturer:** Watts
**Orientation:** VU
**0.25% Pb:** No
**Renewed:** 23-Mar-2016
**Model:** 757DCDAGV
**Meters:** (N),G,H,I,J,K,L,M,O,P,Q,T
**Spare Parts Only:** No
**Bypass:** Watts 007M3QT 3/4" (VU)

---

**Type:** DCDA
**Size:** 8
**Manual:** 9
**Approved:** 09-Mar-2007
**Shutoffs:** (zzz)
**Manufacturer:** Watts
**Orientation:** H
**0.25% Pb:** No
**Renewed:** 09-Mar-2016
**Model:** 757DCDAGV
**Meters:** (N),G,H,I,J,K,L,M,O,P,Q,T
**Spare Parts Only:** No
**Bypass:** Watts 007M3QT 3/4" (H & VU)

---

**Type:** DCDA
**Size:** 8
**Manual:** 9
**Approved:** 09-Mar-2007
**Shutoffs:** (zzz)
**Manufacturer:** Watts
**Orientation:** VU
**0.25% Pb:** No
**Renewed:** 09-Mar-2016
**Model:** 757DCDAGV
**Meters:** (N),G,H,I,J,K,L,M,O,P,Q,T
**Spare Parts Only:** No
**Bypass:** Watts 007M3QT 3/4" (H & VU)

---

**Type:** DCDA
**Size:** 10
**Manual:** 9
**Approved:** 17-Sep-2009
**Shutoffs:** (zzz)
**Manufacturer:** Watts
**Orientation:** H
**0.25% Pb:** No
**Renewed:** 17-Sep-2018
**Model:** 757DCDAGV
**Meters:** (N),G,H,I,J,K,L,M,O,P,Q,T
**Spare Parts Only:** No
**Bypass:** Watts 007M3QT 3/4" (H), Ames 2000 BM3 (H)

---

**Type:** DCDA
**Size:** 10
**Manual:** 9
**Approved:** 17-Sep-2009
**Shutoffs:** (zzz)
**Manufacturer:** Watts
**Orientation:** VU
**0.25% Pb:** No
**Renewed:** 17-Sep-2018
**Model:** 757DCDAGV
**Meters:** (N),G,H,I,J,K,L,M,O,P,Q,T
**Spare Parts Only:** No
**Bypass:** Watts 007M3QT 3/4" (V), Ames 2000 BM3 (V)

---

**Type:** DCDA
**Size:** 2 1/2
**Manual:** 9
**Approved:** 07-Apr-2009
**Shutoffs:** (yyy)
**Manufacturer:** Watts
**Orientation:** VUVD
**0.25% Pb:** No
**Renewed:** 07-Apr-2018
**Model:** 757NDCDABF
**Meters:** (N),G,H,I,J,K,L,M,O,P,Q,T
**Spare Parts Only:** No
**Bypass:** Watts 007M3QT 3/4" (H)

**Type:** DCDA
**Size:** 3
**Manual:** 9
**Approved:** 07-Apr-2009
**Shutoffs:** (yyy)
**Manufacturer:** Watts
**Orientation:** VUVD
**0.25% Pb:** No
**Renewed:** 07-Apr-2018
**Model:** 757NDCDABF
**Meters:** (N),G,H,I,J,K,L,M,O,P,Q,T
**Spare Parts Only:** No
**Bypass:** Watts 007M3QT 3/4" (H)

---

**Type:** DCDA
**Size:** 4
**Manual:** 9
**Approved:** 07-Apr-2009
**Shutoffs:** (yyy)
**Manufacturer:** Watts
**Orientation:** VUVD
**0.25% Pb:** No
**Renewed:** 07-Apr-2018
**Model:** 757NDCDABF
**Meters:** (N),G,H,I,J,K,L,M,O,P,Q,T
**Spare Parts Only:** No
**Bypass:** Watts 007M3QT 3/4" (H)

---

**Type:** DCDA
**Size:** 6
**Manual:** 9
**Approved:** 07-Apr-2009
**Shutoffs:** (yyy)
**Manufacturer:** Watts
**Orientation:** VUVD
**0.25% Pb:** No
**Renewed:** 07-Apr-2018
**Model:** 757NDCDABF
**Meters:** (N),G,H,I,J,K,L,M,O,P,Q,T
**Spare Parts Only:** No
**Bypass:** Watts 007M3QT 3/4" (H)

---

**Type:** DCDA
**Size:** 8
**Manual:** 9
**Approved:** 03-Jan-2013
**Shutoffs:** (yyy)
**Manufacturer:** Watts
**Orientation:** VUVD
**0.25% Pb:** No
**Renewed:** 03-Jan-2016
**Model:** 757NDCDABF
**Meters:** (N),G,H,I,J,K,L,M,O,P,Q,T
**Spare Parts Only:** No
**Bypass:** Watts 007M3QT 3/4" (H)

---

**Type:** DCDA
**Size:** 10
**Manual:** 9
**Approved:** 28-May-2013
**Shutoffs:** (yyy)
**Manufacturer:** Watts
**Orientation:** VUVD
**0.25% Pb:** No
**Renewed:** 28-May-2016
**Model:** 757NDCDABF
**Meters:** (N), H,I,J,K,L,M,N,O,P,Q
**Spare Parts Only:** No
**Bypass:** Watts 007M3QT 3/4" (H), Ames 2000BM3 3/4" (H)

---

**Type:** DCDA
**Size:** 2 1/2
**Manual:** 9
**Approved:** 07-Apr-2009
**Shutoffs:** (zzz)
**Manufacturer:** Watts
**Orientation:** VUVD
**0.25% Pb:** No
**Renewed:** 07-Apr-2018
**Model:** 757NDCDAGV
**Meters:** (N),G,H,I,J,K,L,M,O,P,Q,T
**Spare Parts Only:** No
**Bypass:** Watts 007M3QT 3/4" (H)


2018 © University of Southern California

**Type:** DCDA
**Size:** 3
**Manual:** 9
**Approved:** 07-Apr-2009
**Shutoffs:** (zzz)
**Manufacturer:** Watts
**Orientation:** VUVD
**0.25% Pb:** No
**Renewed:** 07-Apr-2018
**Model:** 757NDCDAGV
**Meters:** (N),G,H,I,J,K,L,M,O,P,Q,T
**Spare Parts Only:** No
**Bypass:** Watts 007M3QT 3/4" (H)

---

**Type:** DCDA
**Size:** 4
**Manual:** 9
**Approved:** 07-Apr-2009
**Shutoffs:** (zzz)
**Manufacturer:** Watts
**Orientation:** VUVD
**0.25% Pb:** No
**Renewed:** 07-Apr-2018
**Model:** 757NDCDAGV
**Meters:** (N),G,H,I,J,K,L,M,O,P,Q,T
**Spare Parts Only:** No
**Bypass:** Watts 007M3QT 3/4" (H)

---

**Type:** DCDA
**Size:** 6
**Manual:** 9
**Approved:** 07-Apr-2009
**Shutoffs:** (zzz)
**Manufacturer:** Watts
**Orientation:** VUVD
**0.25% Pb:** No
**Renewed:** 07-Apr-2018
**Model:** 757NDCDAGV
**Meters:** (N),G,H,I,J,K,L,M,O,P,Q,T
**Spare Parts Only:** No
**Bypass:** Watts 007M3QT 3/4" (H)

---

**Type:** DCDA
**Size:** 8
**Manual:** 9
**Approved:** 03-Jan-2013
**Shutoffs:** (zzz)
**Manufacturer:** Watts
**Orientation:** VUVD
**0.25% Pb:** No
**Renewed:** 03-Jan-2016
**Model:** 757NDCDAGV
**Meters:** (N),G,H,I,J,K,L,M,O,P,Q,T
**Spare Parts Only:** No
**Bypass:** Watts 007M3QT 3/4" (H)

---

**Type:** DCDA
**Size:** 10
**Manual:** 9
**Approved:** 28-May-2013
**Shutoffs:** (zzz)
**Manufacturer:** Watts
**Orientation:** VUVD
**0.25% Pb:** No
**Renewed:** 28-May-2016
**Model:** 757NDCDAGV
**Meters:** (N), H,I,J,K,L,M,N,O,P,Q
**Spare Parts Only:** No
**Bypass:** Watts 007M3QT 3/4" (H), Ames 2000BM3 3/4" (H)

---

**Type:** DCDA
**Size:** 2 1/2
**Manual:** 9
**Approved:** 06-Nov-2003
**Shutoffs:** (yyy)
**Manufacturer:** Watts
**Orientation:** H
**0.25% Pb:** No
**Renewed:** 06-Nov-2015
**Model:** 767aDCDABF
**Meters:** (N),G,H,I,J,K,L,M,O,P,Q,T
**Spare Parts Only:** No
**Bypass:** Watts 007M3QT 3/4" (H)

**Type:** DCDA
**Size:** 2 1/2
**Manual:** 9
**Approved:** 06-Nov-2003
**Shutoffs:** (yyy)
**Manufacturer:** Watts
**Orientation:** VU
**0.25% Pb:** No
**Renewed:** 06-Nov-2015
**Model:** 767aDCDABF
**Meters:** (N),G,H,I,J,K,L,M,O,P,Q,T
**Spare Parts Only:** No
**Bypass:** Watts 007M3QT 3/4" (VU)

---

**Type:** DCDA
**Size:** 3
**Manual:** 9
**Approved:** 06-Nov-2003
**Shutoffs:** (yyy)
**Manufacturer:** Watts
**Orientation:** H
**0.25% Pb:** No
**Renewed:** 06-Nov-2015
**Model:** 767aDCDABF
**Meters:** (N),G,H,I,J,K,L,M,O,P,Q,T
**Spare Parts Only:** No
**Bypass:** Watts 007M3QT 3/4" (H)

---

**Type:** DCDA
**Size:** 3
**Manual:** 9
**Approved:** 06-Nov-2003
**Shutoffs:** (yyy)
**Manufacturer:** Watts
**Orientation:** VU
**0.25% Pb:** No
**Renewed:** 06-Nov-2015
**Model:** 767aDCDABF
**Meters:** (N),G,H,I,J,K,L,M,O,P,Q,T
**Spare Parts Only:** No
**Bypass:** Watts 007M3QT 3/4" (VU)

---

**Type:** DCDA
**Size:** 4
**Manual:** 9
**Approved:** 30-Aug-2006
**Shutoffs:** (yyy)
**Manufacturer:** Watts
**Orientation:** H
**0.25% Pb:** No
**Renewed:** 30-Aug-2018
**Model:** 767aDCDABF
**Meters:** (N),G,H,I,J,K,L,M,O,P,Q,T
**Spare Parts Only:** No
**Bypass:** Watts 007M3QT 3/4" (VU)

---

**Type:** DCDA
**Size:** 4
**Manual:** 9
**Approved:** 18-Jan-2005
**Shutoffs:** (yyy)
**Manufacturer:** Watts
**Orientation:** VU
**0.25% Pb:** No
**Renewed:** 18-Jan-2017
**Model:** 767aDCDABF
**Meters:** (N),G,H,I,J,K,L,M,O,P,Q,T
**Spare Parts Only:** No
**Bypass:** Watts 007M3QT 3/4" (VU)

---

**Type:** DCDA
**Size:** 2 1/2
**Manual:** 9
**Approved:** 06-Nov-2003
**Shutoffs:** (zzz)
**Manufacturer:** Watts
**Orientation:** H
**0.25% Pb:** No
**Renewed:** 06-Nov-2015
**Model:** 767aDCDAGV
**Meters:** (N),G,H,I,J,K,L,M,O,P,Q,T
**Spare Parts Only:** No
**Bypass:** Watts 007M3QT 3/4" (H)

---

**Type:** DCDA
**Size:** 2 1/2
**Manual:** 9
**Approved:** 06-Nov-2003
**Shutoffs:** (zzz)
**Manufacturer:** Watts
**Orientation:** VU
**0.25% Pb:** No
**Renewed:** 06-Nov-2015
**Model:** 767aDCDAGV
**Meters:** (N),G,H,I,J,K,L,M,O,P,Q,T
**Spare Parts Only:** No
**Bypass:** Watts 007M3QT 3/4" (VU)


2018 © University of Southern California

**Type:** DCDA
**Size:** 3
**Manual:** 9
**Approved:** 06-Nov-2003
**Shutoffs:** (zzz)
**Manufacturer:** Watts
**Orientation:** H
**0.25% Pb:** No
**Renewed:** 06-Nov-2015
**Model:** 767aDCDAGV
**Meters:** (N),G,H,I,J,K,L,M,O,P,Q,T
**Spare Parts Only:** No
**Bypass:** Watts 007M3QT 3/4" (H)

---

**Type:** DCDA
**Size:** 3
**Manual:** 9
**Approved:** 06-Nov-2003
**Shutoffs:** (zzz)
**Manufacturer:** Watts
**Orientation:** VU
**0.25% Pb:** No
**Renewed:** 06-Nov-2015
**Model:** 767aDCDAGV
**Meters:** (N),G,H,I,J,K,L,M,O,P,Q,T
**Spare Parts Only:** No
**Bypass:** Watts 007M3QT 3/4" (VU)

---

**Type:** DCDA
**Size:** 4
**Manual:** 9
**Approved:** 06-Nov-2003
**Shutoffs:** (zzz)
**Manufacturer:** Watts
**Orientation:** H
**0.25% Pb:** No
**Renewed:** 06-Nov-2015
**Model:** 767aDCDAGV
**Meters:** (N),G,H,I,J,K,L,M,O,P,Q,T
**Spare Parts Only:** No
**Bypass:** Watts 007M3QT 3/4" (H)

---

**Type:** DCDA
**Size:** 4
**Manual:** 9
**Approved:** 18-Jan-2005
**Shutoffs:** (zzz)
**Manufacturer:** Watts
**Orientation:** VU
**0.25% Pb:** No
**Renewed:** 18-Jan-2017
**Model:** 767aDCDAGV
**Meters:** (N),G,H,I,J,K,L,M,O,P,Q,T
**Spare Parts Only:** No
**Bypass:** Watts 007M3QT 3/4" (VU)

---

**Type:** DCDA
**Size:** 2 1/2
**Manual:** 9
**Approved:** 04-Oct-2005
**Shutoffs:** (yyy)
**Manufacturer:** Watts
**Orientation:** H
**0.25% Pb:** No
**Renewed:** 04-Oct-2017
**Model:** 767DCDABF
**Meters:** (N),G,H,I,J,K,L,M,O,P,Q,T
**Spare Parts Only:** No
**Bypass:** Watts 007M3QT 3/4" (H)

---

**Type:** DCDA
**Size:** 2 1/2
**Manual:** 9
**Approved:** 04-Oct-2005
**Shutoffs:** (yyy)
**Manufacturer:** Watts
**Orientation:** VU
**0.25% Pb:** No
**Renewed:** 04-Oct-2017
**Model:** 767DCDABF
**Meters:** (N),G,H,I,J,K,L,M,O,P,Q,T
**Spare Parts Only:** No
**Bypass:** Watts 007M3QT 3/4" (V)

---

**Type:** DCDA
**Size:** 3
**Manual:** 9
**Approved:** 04-Oct-2005
**Shutoffs:** (yyy)
**Manufacturer:** Watts
**Orientation:** H
**0.25% Pb:** No
**Renewed:** 04-Oct-2017
**Model:** 767DCDABF
**Meters:** (N),G,H,I,J,K,L,M,O,P,Q,T
**Spare Parts Only:** No
**Bypass:** Watts 007M3QT 3/4" (H)

**Type:** DCDA
**Size:** 3
**Manual:** 9
**Approved:** 04-Oct-2005
**Shutoffs:** (yyy)

**Manufacturer:** Watts
**Orientation:** VU
**0.25% Pb:** No
**Renewed:** 04-Oct-2017

**Model:** 767DCDABF
**Meters:** (N),G,H,I,J,K,L,M,O,P,Q,T
**Spare Parts Only:** No
**Bypass:** Watts 007M3QT 3/4" (V)

---

**Type:** DCDA
**Size:** 4
**Manual:** 9
**Approved:** 19-Mar-2007
**Shutoffs:** (yyy)

**Manufacturer:** Watts
**Orientation:** H
**0.25% Pb:** No
**Renewed:** 23-Mar-2016

**Model:** 767DCDABF
**Meters:** (N),G,H,I,J,K,L,M,O,P,Q,T
**Spare Parts Only:** No
**Bypass:** Watts 007M3QT 3/4" (H )

---

**Type:** DCDA
**Size:** 4
**Manual:** 9
**Approved:** 19-Mar-2007
**Shutoffs:** (yyy)

**Manufacturer:** Watts
**Orientation:** VU
**0.25% Pb:** No
**Renewed:** 23-Mar-2016

**Model:** 767DCDABF
**Meters:** (N),G,H,I,J,K,L,M,O,P,Q,T
**Spare Parts Only:** No
**Bypass:** Watts 007M3QT 3/4" (VU)

---

**Type:** DCDA
**Size:** 6
**Manual:** 9
**Approved:** 09-Mar-2007
**Shutoffs:** (yyy)

**Manufacturer:** Watts
**Orientation:** H
**0.25% Pb:** No
**Renewed:** 09-Mar-2016

**Model:** 767DCDABF
**Meters:** (N),G,H,I,J,K,L,M,O,P,Q,T
**Spare Parts Only:** No
**Bypass:** Watts 007M3QT 3/4" (H & VU)

---

**Type:** DCDA
**Size:** 6
**Manual:** 9
**Approved:** 09-Mar-2007
**Shutoffs:** (yyy)

**Manufacturer:** Watts
**Orientation:** VU
**0.25% Pb:** No
**Renewed:** 09-Mar-2016

**Model:** 767DCDABF
**Meters:** (N),G,H,I,J,K,L,M,O,P,Q,T
**Spare Parts Only:** No
**Bypass:** Watts 007M3QT 3/4" (H & VU)

---

**Type:** DCDA
**Size:** 8
**Manual:** 9
**Approved:** 17-Sep-2009
**Shutoffs:** (yyy)

**Manufacturer:** Watts
**Orientation:** H
**0.25% Pb:** No
**Renewed:** 17-Sep-2018

**Model:** 767DCDABF
**Meters:** (N),G,H,I,J,K,L,M,O,P,Q,T
**Spare Parts Only:** No
**Bypass:** Watts 007M3QT 3/4" (H), Ames 2000 BM3 (H)


2018 © University of Southern California

**Type:** DCDA
**Size:** 8
**Manual:** 9
**Approved:** 17-Sep-2009
**Shutoffs:** (yyy)

**Manufacturer:** Watts
**Orientation:** VU
**0.25% Pb:** No
**Renewed:** 17-Sep-2018

**Model:** 767DCDABF
**Meters:** (N),G,H,I,J,K,L,M,O,P,Q,T
**Spare Parts Only:** No
**Bypass:** Watts 007M3QT 3/4" (V), Ames 2000 BM3 (V)

---

**Type:** DCDA
**Size:** 10
**Manual:** 9
**Approved:** 17-Sep-2009
**Shutoffs:** (yyy)

**Manufacturer:** Watts
**Orientation:** H
**0.25% Pb:** No
**Renewed:** 17-Sep-2018

**Model:** 767DCDABF
**Meters:** (N),G,H,I,J,K,L,M,O,P,Q,T
**Spare Parts Only:** No
**Bypass:** Watts 007M3QT 3/4" (H), Ames 2000 BM3 (H)

---

**Type:** DCDA
**Size:** 10
**Manual:** 9
**Approved:** 17-Sep-2009
**Shutoffs:** (yyy)

**Manufacturer:** Watts
**Orientation:** VU
**0.25% Pb:** No
**Renewed:** 17-Sep-2018

**Model:** 767DCDABF
**Meters:** (N),G,H,I,J,K,L,M,O,P,Q,T
**Spare Parts Only:** No
**Bypass:** Watts 007M3QT 3/4" (V), Ames 2000 BM3 (V)

---

**Type:** DCDA
**Size:** 2 1/2
**Manual:** 9
**Approved:** 04-Oct-2005
**Shutoffs:** (zzz)

**Manufacturer:** Watts
**Orientation:** H
**0.25% Pb:** No
**Renewed:** 04-Oct-2017

**Model:** 767DCDAGV
**Meters:** (N),G,H,I,J,K,L,M,O,P,Q,T
**Spare Parts Only:** No
**Bypass:** Watts 007M3QT 3/4" (H)

---

**Type:** DCDA
**Size:** 2 1/2
**Manual:** 9
**Approved:** 04-Oct-2005
**Shutoffs:** (zzz)

**Manufacturer:** Watts
**Orientation:** VU
**0.25% Pb:** No
**Renewed:** 04-Oct-2017

**Model:** 767DCDAGV
**Meters:** (N),G,H,I,J,K,L,M,O,P,Q,T
**Spare Parts Only:** No
**Bypass:** Watts 007M3QT 3/4" (V)

---

**Type:** DCDA
**Size:** 3
**Manual:** 9
**Approved:** 04-Oct-2005
**Shutoffs:** (zzz)

**Manufacturer:** Watts
**Orientation:** H
**0.25% Pb:** No
**Renewed:** 04-Oct-2017

**Model:** 767DCDAGV
**Meters:** (N),G,H,I,J,K,L,M,O,P,Q,T
**Spare Parts Only:** No
**Bypass:** Watts 007M3QT 3/4" (H)

**Type:** DCDA
**Size:** 3
**Manual:** 9
**Approved:** 04-Oct-2005
**Shutoffs:** (zzz)
**Manufacturer:** Watts
**Orientation:** VU
**0.25% Pb:** No
**Renewed:** 04-Oct-2017
**Model:** 767DCDAGV
**Meters:** (N),G,H,I,J,K,L,M,O,P,Q,T
**Spare Parts Only:** No
**Bypass:** Watts 007M3QT 3/4" (V)

---

**Type:** DCDA
**Size:** 4
**Manual:** 9
**Approved:** 19-Mar-2007
**Shutoffs:** (zzz)
**Manufacturer:** Watts
**Orientation:** H
**0.25% Pb:** No
**Renewed:** 23-Mar-2016
**Model:** 767DCDAGV
**Meters:** (N),G,H,I,J,K,L,M,O,P,Q,T
**Spare Parts Only:** No
**Bypass:** Watts 007M3QT 3/4" (H )

---

**Type:** DCDA
**Size:** 4
**Manual:** 9
**Approved:** 19-Mar-2007
**Shutoffs:** (zzz)
**Manufacturer:** Watts
**Orientation:** VU
**0.25% Pb:** No
**Renewed:** 23-Mar-2016
**Model:** 767DCDAGV
**Meters:** (N),G,H,I,J,K,L,M,O,P,Q,T
**Spare Parts Only:** No
**Bypass:** Watts 007M3QT 3/4" (VU)

---

**Type:** DCDA
**Size:** 6
**Manual:** 9
**Approved:** 09-Mar-2007
**Shutoffs:** (zzz)
**Manufacturer:** Watts
**Orientation:** H
**0.25% Pb:** No
**Renewed:** 09-Mar-2016
**Model:** 767DCDAGV
**Meters:** (N),G,H,I,J,K,L,M,O,P,Q,T
**Spare Parts Only:** No
**Bypass:** Watts 007M3QT 3/4" (H & VU)

---

**Type:** DCDA
**Size:** 6
**Manual:** 9
**Approved:** 09-Mar-2007
**Shutoffs:** (zzz)
**Manufacturer:** Watts
**Orientation:** VU
**0.25% Pb:** No
**Renewed:** 09-Mar-2016
**Model:** 767DCDAGV
**Meters:** (N),G,H,I,J,K,L,M,O,P,Q,T
**Spare Parts Only:** No
**Bypass:** Watts 007M3QT 3/4" (H & VU)

---

**Type:** DCDA
**Size:** 8
**Manual:** 9
**Approved:** 17-Sep-2009
**Shutoffs:** (zzz)
**Manufacturer:** Watts
**Orientation:** H
**0.25% Pb:** No
**Renewed:** 17-Sep-2018
**Model:** 767DCDAGV
**Meters:** (N),G,H,I,J,K,L,M,O,P,Q,T
**Spare Parts Only:** No
**Bypass:** Watts 007M3QT 3/4" (H), Ames 2000 BM3 (H)


2018 © University of Southern California

**Type:** DCDA
**Size:** 8
**Manual:** 9
**Approved:** 17-Sep-2009
**Shutoffs:** (zzz)

**Manufacturer:** Watts
**Orientation:** VU
**0.25% Pb:** No
**Renewed:** 17-Sep-2018

**Model:** 767DCDAGV
**Meters:** (N),G,H,I,J,K,L,M,O,P,Q,T
**Spare Parts Only:** No
**Bypass:** Watts 007M3QT 3/4" (V), Ames 2000 BM3 (V)

---

**Type:** DCDA
**Size:** 10
**Manual:** 9
**Approved:** 17-Sep-2009
**Shutoffs:** (zzz)

**Manufacturer:** Watts
**Orientation:** H
**0.25% Pb:** No
**Renewed:** 17-Sep-2018

**Model:** 767DCDAGV
**Meters:** (N),G,H,I,J,K,L,M,O,P,Q,T
**Spare Parts Only:** No
**Bypass:** Watts 007M3QT 3/4" (H), Ames 2000 BM3 (H)

---

**Type:** DCDA
**Size:** 10
**Manual:** 9
**Approved:** 17-Sep-2009
**Shutoffs:** (zzz)

**Manufacturer:** Watts
**Orientation:** VU
**0.25% Pb:** No
**Renewed:** 17-Sep-2018

**Model:** 767DCDAGV
**Meters:** (N),G,H,I,J,K,L,M,O,P,Q,T
**Spare Parts Only:** No
**Bypass:** Watts 007M3QT 3/4" (V), Ames 2000 BM3 (V)

---

**Type:** DCDA
**Size:** 2 1/2
**Manual:** 9
**Approved:** 07-Apr-2009
**Shutoffs:** (yyy)

**Manufacturer:** Watts
**Orientation:** VUVD
**0.25% Pb:** No
**Renewed:** 07-Apr-2018

**Model:** 767NDCDABF
**Meters:** (N),G,H,I,J,K,L,M,O,P,Q,T
**Spare Parts Only:** No
**Bypass:** Watts 007M3QT 3/4" (H)

---

**Type:** DCDA
**Size:** 3
**Manual:** 9
**Approved:** 07-Apr-2009
**Shutoffs:** (yyy)

**Manufacturer:** Watts
**Orientation:** VUVD
**0.25% Pb:** No
**Renewed:** 07-Apr-2018

**Model:** 767NDCDABF
**Meters:** (N),G,H,I,J,K,L,M,O,P,Q,T
**Spare Parts Only:** No
**Bypass:** Watts 007M3QT 3/4" (H)

---

**Type:** DCDA
**Size:** 4
**Manual:** 9
**Approved:** 07-Apr-2009
**Shutoffs:** (yyy)

**Manufacturer:** Watts
**Orientation:** VUVD
**0.25% Pb:** No
**Renewed:** 07-Apr-2018

**Model:** 767NDCDABF
**Meters:** (N),G,H,I,J,K,L,M,O,P,Q,T
**Spare Parts Only:** No
**Bypass:** Watts 007M3QT 3/4" (H)

**Type:** DCDA
**Size:** 6
**Manual:** 9
**Approved:** 03-Jan-2013
**Shutoffs:** (yyy)

**Manufacturer:** Watts
**Orientation:** VUVD
**0.25% Pb:** No
**Renewed:** 03-Jan-2016

**Model:** 767NDCDABF
**Meters:** (N),G,H,I,J,K,L,M,O,P,Q,T
**Spare Parts Only:** No
**Bypass:** Watts 007M3QT 3/4" (H)

---

**Type:** DCDA
**Size:** 8
**Manual:** 9
**Approved:** 28-May-2013
**Shutoffs:** (yyy)

**Manufacturer:** Watts
**Orientation:** VUVD
**0.25% Pb:** No
**Renewed:** 28-May-2016

**Model:** 767NDCDABF
**Meters:** (N), H,I,J,K,L,M,N,O,P,Q
**Spare Parts Only:** No
**Bypass:** Watts 007M3QT 3/4" (H), Ames 2000BM3 3/4" (H)

---

**Type:** DCDA
**Size:** 10
**Manual:** 9
**Approved:** 28-May-2013
**Shutoffs:** (yyy)

**Manufacturer:** Watts
**Orientation:** VUVD
**0.25% Pb:** No
**Renewed:** 28-May-2016

**Model:** 767NDCDABF
**Meters:** (N), H,I,J,K,L,M,N,O,P,Q
**Spare Parts Only:** No
**Bypass:** Watts 007M3QT 3/4" (H), Ames 2000BM3 3/4" (H)

---

**Type:** DCDA
**Size:** 2 1/2
**Manual:** 9
**Approved:** 07-Apr-2009
**Shutoffs:** (zzz)

**Manufacturer:** Watts
**Orientation:** VUVD
**0.25% Pb:** No
**Renewed:** 07-Apr-2018

**Model:** 767NDCDAGV
**Meters:** (N),G,H,I,J,K,L,M,O,P,Q,T
**Spare Parts Only:** No
**Bypass:** Watts 007M3QT 3/4" (H)

---

**Type:** DCDA
**Size:** 3
**Manual:** 9
**Approved:** 07-Apr-2009
**Shutoffs:** (zzz)

**Manufacturer:** Watts
**Orientation:** VUVD
**0.25% Pb:** No
**Renewed:** 07-Apr-2018

**Model:** 767NDCDAGV
**Meters:** (N),G,H,I,J,K,L,M,O,P,Q,T
**Spare Parts Only:** No
**Bypass:** Watts 007M3QT 3/4" (H)

---

**Type:** DCDA
**Size:** 4
**Manual:** 9
**Approved:** 07-Apr-2009
**Shutoffs:** (zzz)

**Manufacturer:** Watts
**Orientation:** VUVD
**0.25% Pb:** No
**Renewed:** 07-Apr-2018

**Model:** 767NDCDAGV
**Meters:** (N),G,H,I,J,K,L,M,O,P,Q,T
**Spare Parts Only:** No
**Bypass:** Watts 007M3QT 3/4" (H)


2018 © University of Southern California

**Type:** DCDA
**Size:** 6
**Manual:** 9
**Approved:** 03-Jan-2013
**Shutoffs:** (zzz)

**Manufacturer:** Watts
**Orientation:** VUVD
**0.25% Pb:** No
**Renewed:** 03-Jan-2016

**Model:** 767NDCDAGV
**Meters:** (N),G,H,I,J,K,L,M,O,P,Q,T
**Spare Parts Only:** No
**Bypass:** Watts 007M3QT 3/4" (H)

---

**Type:** DCDA
**Size:** 8
**Manual:** 9
**Approved:** 28-May-2013
**Shutoffs:** (zzz)

**Manufacturer:** Watts
**Orientation:** VUVD
**0.25% Pb:** No
**Renewed:** 28-May-2016

**Model:** 767NDCDAGV
**Meters:** (N), H,I,J,K,L,M,N,O,P,Q
**Spare Parts Only:** No
**Bypass:** Watts 007M3QT 3/4" (H), Ames 2000BM3 3/4" (H)

---

**Type:** DCDA
**Size:** 10
**Manual:** 9
**Approved:** 28-May-2013
**Shutoffs:** (zzz)

**Manufacturer:** Watts
**Orientation:** VUVD
**0.25% Pb:** No
**Renewed:** 28-May-2016

**Model:** 767NDCDAGV
**Meters:** (N), H,I,J,K,L,M,N,O,P,Q
**Spare Parts Only:** No
**Bypass:** Watts 007M3QT 3/4" (H), Ames 2000BM3 3/4" (H)

---

**Type:** DCDA
**Size:** 4
**Manual:** 8
**Approved:** 20-May-1992
**Shutoffs:** pp,hh,mm,uu,zz

**Manufacturer:** Watts
**Orientation:** H
**0.25% Pb:** No
**Renewed:** 20-May-2016

**Model:** 770DCDA
**Meters:** (H),A,B,C,D,E,F,G,I,J,K,L,M,N,O,P,Q,T
**Spare Parts Only:** Yes
**Bypass:** Watts 007M1QT 3/4" (H)

---

**Type:** DCDA
**Size:** 8
**Manual:** 8
**Approved:** 13-Jan-1993
**Shutoffs:** oo,gg,hh,ll,mm,pp,tt,uu

**Manufacturer:** Watts
**Orientation:** H
**0.25% Pb:** No
**Renewed:** 13-Jan-2017

**Model:** 770DCDA
**Meters:** (N),D,E,F,G,H,I,J,K,L,M,O,P,Q,T
**Spare Parts Only:** Yes
**Bypass:** Watts 007M1QT 3/4" (H)

---

**Type:** DCDA
**Size:** 4
**Manual:** 8
**Approved:** 01-Aug-1992
**Shutoffs:** oo

**Manufacturer:** Watts
**Orientation:** H
**0.25% Pb:** No
**Renewed:** 01-Aug-2016

**Model:** 772DCDA
**Meters:** (H),A,B,C,D,E,F,G,I,J,K,L,M,N,O,P,Q,T
**Spare Parts Only:** Yes
**Bypass:** Watts 007M1QT 3/4" (H)

**Type:** DCDA
**Manufacturer:** Watts
**Model:** 772DCDA
**Size:** 10
**Orientation:** H
**Meters:** (H),A,B,C,D,E,F,G,I,J,K,L,M,N,O,P,Q,T
**Manual:** 8
**0.25% Pb:** No
**Spare Parts Only:** Yes
**Approved:** 13-Jan-1993
**Renewed:** 13-Jan-2017
**Bypass:** Watts 007M1QT 3/4" (H)
**Shutoffs:** oo

---

**Type:** DCDA
**Manufacturer:** Watts
**Model:** 774DCDA
**Size:** 2 1/2
**Orientation:** H
**Meters:** (M),A,B,C,D,E,F,G,H,I,J,K,L,N,O,P,Q,T
**Manual:** 8
**0.25% Pb:** No
**Spare Parts Only:** No
**Approved:** 24-May-1995
**Renewed:** 24-May-2016
**Bypass:** Watts 007M2QT 3/4: (H), Ames 2000B 3/4" (H)
**Shutoffs:** (uu),ee,ff,gg,hh,ll,mm,oo,pp,tt,ccc,ddd,ffff,gggg

---

**Type:** DCDA
**Manufacturer:** Watts
**Model:** 774DCDA
**Size:** 3
**Orientation:** H
**Meters:** (M),A,B,C,D,E,F,G,H,I,J,K,L,N,O,P,Q,T
**Manual:** 8
**0.25% Pb:** No
**Spare Parts Only:** No
**Approved:** 24-May-1995
**Renewed:** 24-May-2016
**Bypass:** Watts 007M2QT 3/4: (H), Ames 2000B 3/4" (H)
**Shutoffs:** (uu),ee,ff,gg,hh,ll,mm,oo,pp,tt,ccc,ddd,ffff,gggg

---

**Type:** DCDA
**Manufacturer:** Watts
**Model:** 774DCDA
**Size:** 4
**Orientation:** H
**Meters:** (M),A,B,C,D,E,F,G,H,I,J,K,L,N,O,P,Q,T
**Manual:** 8
**0.25% Pb:** No
**Spare Parts Only:** No
**Approved:** 24-May-1995
**Renewed:** 24-May-2016
**Bypass:** Watts 007M2QT 3/4: (H), Ames 2000B 3/4" (H)
**Shutoffs:** (uu),ee,ff,gg,hh,ll,mm,oo,pp,tt,ccc,ddd,ffff,gggg

---

**Type:** DCDA
**Manufacturer:** Watts
**Model:** 774DCDA
**Size:** 6
**Orientation:** H
**Meters:** (M),A,B,C,D,E,F,G,H,I,J,K,L,N,O,P,Q,T
**Manual:** 8
**0.25% Pb:** No
**Spare Parts Only:** No
**Approved:** 09-Sep-1992
**Renewed:** 09-Sep-2016
**Bypass:** Watts 007M1QT 3/4" (H)
**Shutoffs:** (uu),ee,ff,gg,hh,ll,mm,oo,pp,tt,ccc,ddd,ffff,gggg


2018 © University of Southern California

**Type:** DCDA
**Manufacturer:** Watts
**Model:** 774DCDA
**Size:** 8
**Orientation:** H
**Meters:** (M),A,B,C,D,E,F,G,H,I,J,K,L,N,O,P,Q,T
**Manual:** 8
**0.25% Pb:** No
**Spare Parts Only:** No
**Approved:** 16-Sep-1996
**Renewed:** 16-Sep-2017
**Bypass:** Watts 007M2QT 3/4: (H), Ames 2000B 3/4" (H)
**Shutoffs:** (mm),ee,ff,gg,hh,ll,oo,pp,tt,uu,ccc,ddd,ffff,gggg

---

**Type:** DCDA
**Manufacturer:** Watts
**Model:** 774DCDA
**Size:** 10
**Orientation:** H
**Meters:** (J),C,E,F,G,H,I,K,L,M,N,O,P,Q,T
**Manual:** 8
**0.25% Pb:** No
**Spare Parts Only:** No
**Approved:** 16-Feb-2001
**Renewed:** 16-Feb-2016
**Bypass:** Watts 007M2QT 3/4: (H), Ames 2000B 3/4" (H)
**Shutoffs:** (ll),mm,ffff,gggg

---

**Type:** DCDA
**Manufacturer:** Watts
**Model:** 774DCDA
**Size:** 12
**Orientation:** H
**Meters:** (N),H,I,J,K,L,M,O,P,Q
**Manual:** 9
**0.25% Pb:** No
**Spare Parts Only:** No
**Approved:** 18-Feb-2010
**Renewed:** 18-Feb-2016
**Bypass:** Ames 2000BM3 3/4" (H); Watts 007M3QT 3/4" (H)
**Shutoffs:** (mm), ll

---

**Type:** DCDA
**Manufacturer:** Watts
**Model:** 774DCDA
**Size:** 12
**Orientation:** VU
**Meters:** (N),H,I,J,K,L,M,O,P,Q
**Manual:** 9
**0.25% Pb:** No
**Spare Parts Only:** No
**Approved:** 21-Mar-2011
**Renewed:** 21-Mar-2017
**Bypass:** Ames 2000BM3 3/4" (H); Watts 007M3QT 3/4" (H)
**Shutoffs:** (mm), ll

---

**Type:** DCDA
**Manufacturer:** Watts
**Model:** 774DCDA-1
**Size:** 12
**Orientation:** H
**Meters:** (N),H,I,J,K,L,M,O,P,Q
**Manual:** 9
**0.25% Pb:** No
**Spare Parts Only:** No
**Approved:** 18-Feb-2010
**Renewed:** 18-Feb-2016
**Bypass:** Ames 200B 3/4" (H); Watts 719QT 3/4" (H)
**Shutoffs:** (mm), ll

**Type:** DCDA
**Manufacturer:** Watts
**Model:** 774DCDA-1
**Size:** 12
**Orientation:** VU
**Meters:** (N), H,I,J,K,L,M,O,P,Q
**Manual:** 9
**0.25% Pb:** No
**Spare Parts Only:** No
**Approved:** 21-Mar-2011
**Renewed:** 21-Mar-2017
**Bypass:** Ames 200B 3/4" (VU); Watts 719QT 3/4" (VU)
**Shutoffs:** (mm), ll

---

**Type:** DCDA
**Manufacturer:** Watts
**Model:** 774XDCDA
**Size:** 2 1/2
**Orientation:** H
**Meters:** (M),N,O,P,Q
**Manual:** 8
**0.25% Pb:** No
**Spare Parts Only:** Yes
**Approved:** 10-Sep-1996
**Renewed:** 10-Sep-2017
**Bypass:** Watts 007M2QT 3/4: (H), Ames 2000B 3/4" (H)
**Shutoffs:** (mm),ee,ff,gg,hh,ll,oo,pp,tt,uu,ccc,ddd,ffff,gggg

---

**Type:** DCDA
**Manufacturer:** Watts
**Model:** 774XDCDA
**Size:** 6
**Orientation:** H
**Meters:** (M),A,B,C,D,E,F,G,H,I,J,K,L,N,O,P,Q,T
**Manual:** 8
**0.25% Pb:** No
**Spare Parts Only:** Yes
**Approved:** 24-May-1995
**Renewed:** 24-May-2016
**Bypass:** Watts 007M2QT 3/4: (H), Ames 2000B 3/4" (H)
**Shutoffs:** (uu),ee,ff,gg,hh,ll,mm,oo,pp,tt,uu,ccc,ddd,ffff,gggg

---

**Type:** DCDA
**Manufacturer:** Watts
**Model:** 774XDCDA
**Size:** 8
**Orientation:** H
**Meters:** (M),A,B,C,D,E,F,G,H,I,J,K,L,N,O,P,Q,T
**Manual:** 8
**0.25% Pb:** No
**Spare Parts Only:** Yes
**Approved:** 09-Sep-1992
**Renewed:** 09-Sep-2016
**Bypass:** Watts 007M1QT 3/4" (H)
**Shutoffs:** (uu),ee,ff,gg,hh,ll,mm,oo,pp,tt,ccc,ddd,ffff,gggg

---

**Type:** DCDA
**Manufacturer:** Watts
**Model:** LF757DCDABF
**Size:** 2 1/2
**Orientation:** H
**Meters:** (O)
**Manual:** 9
**0.25% Pb:** Yes
**Spare Parts Only:** No
**Approved:** 08-Jan-2014
**Renewed:** 08-Jan-2017
**Bypass:** Watts LF007M3QT 3/4" (H)
**Shutoffs:** (yyy)
**Notes:** Lead free compliant version identified with NSF61 mark on meter

**Type:** DCDA
**Manufacturer:** Watts
**Model:** LF757DCDABF
**Size:** 2 1/2
**Orientation:** VU
**Meters:** (O)
**Manual:** 9
**0.25% Pb:** Yes
**Spare Parts Only:** No
**Approved:** 08-Jan-2014
**Renewed:** 08-Jan-2017
**Bypass:** Watts LF007M3QT 3/4" (VU)
**Shutoffs:** (yyy)
**Notes:** Lead free compliant version identified with NSF61 mark on meter


2018 © University of Southern California

**Type:** DCDA
**Manufacturer:** Watts
**Model:** LF757DCDABF
**Size:** 3
**Orientation:** H
**Meters:** (O)
**Manual:** 9
**0.25% Pb:** Yes
**Spare Parts Only:** No
**Approved:** 08-Jan-2014
**Renewed:** 08-Jan-2017
**Bypass:** Watts LF007M3QT 3/4" (H)
**Shutoffs:** (yyy)
**Notes:** Lead free compliant version identified with NSF61 mark on meter

---

**Type:** DCDA
**Manufacturer:** Watts
**Model:** LF757DCDABF
**Size:** 3
**Orientation:** VU
**Meters:** (O)
**Manual:** 9
**0.25% Pb:** Yes
**Spare Parts Only:** No
**Approved:** 08-Jan-2014
**Renewed:** 08-Jan-2017
**Bypass:** Watts LF007M3QT 3/4" (VU)
**Shutoffs:** (yyy)
**Notes:** Lead free compliant version identified with NSF61 mark on meter

---

**Type:** DCDA
**Manufacturer:** Watts
**Model:** LF757DCDABF
**Size:** 4
**Orientation:** H
**Meters:** (O)
**Manual:** 9
**0.25% Pb:** Yes
**Spare Parts Only:** No
**Approved:** 08-Jan-2014
**Renewed:** 08-Jan-2017
**Bypass:** Watts LF007M3QT 3/4" (H)
**Shutoffs:** (yyy)
**Notes:** Lead free compliant version identified with NSF61 mark on meter

---

**Type:** DCDA
**Manufacturer:** Watts
**Model:** LF757DCDABF
**Size:** 4
**Orientation:** VU
**Meters:** (O)
**Manual:** 9
**0.25% Pb:** Yes
**Spare Parts Only:** No
**Approved:** 08-Jan-2014
**Renewed:** 08-Jan-2017
**Bypass:** Watts LF007M3QT 3/4" (VU)
**Shutoffs:** (yyy)
**Notes:** Lead free compliant version identified with NSF61 mark on meter

---

**Type:** DCDA
**Manufacturer:** Watts
**Model:** LF757DCDABF
**Size:** 6
**Orientation:** H
**Meters:** (O)
**Manual:** 9
**0.25% Pb:** Yes
**Spare Parts Only:** No
**Approved:** 08-Jan-2014
**Renewed:** 08-Jan-2017
**Bypass:** Watts LF007M3QT 3/4" (H)
**Shutoffs:** (yyy)
**Notes:** Lead free compliant version identified with NSF61 mark on meter

---

**Type:** DCDA
**Manufacturer:** Watts
**Model:** LF757DCDABF
**Size:** 6
**Orientation:** VU
**Meters:** (O)
**Manual:** 9
**0.25% Pb:** Yes
**Spare Parts Only:** No
**Approved:** 08-Jan-2014
**Renewed:** 08-Jan-2017
**Bypass:** Watts LF007M3QT 3/4" (VU)
**Shutoffs:** (yyy)
**Notes:** Lead free compliant version identified with NSF61 mark on meter

**Type:** DCDA
**Manufacturer:** Watts
**Model:** LF757DCDABF
**Size:** 8
**Orientation:** H
**Meters:** (O)
**Manual:** 9
**0.25% Pb:** Yes
**Spare Parts Only:** No
**Approved:** 08-Jan-2014
**Renewed:** 08-Jan-2017
**Bypass:** Watts LF007M3QT 3/4" (H)
**Shutoffs:** (yyy)
**Notes:** Lead free compliant version identified with NSF61 mark on meter

---

**Type:** DCDA
**Manufacturer:** Watts
**Model:** LF757DCDABF
**Size:** 8
**Orientation:** VU
**Meters:** (O)
**Manual:** 9
**0.25% Pb:** Yes
**Spare Parts Only:** No
**Approved:** 08-Jan-2014
**Renewed:** 08-Jan-2017
**Bypass:** Watts LF007M3QT 3/4" (VU)
**Shutoffs:** (yyy)
**Notes:** Lead free compliant version identified with NSF61 mark on meter

---

**Type:** DCDA
**Manufacturer:** Watts
**Model:** LF757DCDABF
**Size:** 10
**Orientation:** H
**Meters:** (O)
**Manual:** 9
**0.25% Pb:** Yes
**Spare Parts Only:** No
**Approved:** 08-Jan-2014
**Renewed:** 08-Jan-2017
**Bypass:** Watts LF007M3QT 3/4" (H)
**Shutoffs:** (yyy)
**Notes:** Lead free compliant version identified with NSF61 mark on meter

---

**Type:** DCDA
**Manufacturer:** Watts
**Model:** LF757DCDABF
**Size:** 10
**Orientation:** VU
**Meters:** (O)
**Manual:** 9
**0.25% Pb:** Yes
**Spare Parts Only:** No
**Approved:** 08-Jan-2014
**Renewed:** 08-Jan-2017
**Bypass:** Watts LF007M3QT 3/4" (VU)
**Shutoffs:** (yyy)
**Notes:** Lead free compliant version identified with NSF61 mark on meter

---

**Type:** DCDA
**Manufacturer:** Watts
**Model:** LF757DCDAGV
**Size:** 2 1/2
**Orientation:** H
**Meters:** (O)
**Manual:** 9
**0.25% Pb:** Yes
**Spare Parts Only:** No
**Approved:** 08-Jan-2014
**Renewed:** 08-Jan-2017
**Bypass:** Watts LF007M3QT 3/4" (H)
**Shutoffs:** (zzz)
**Notes:** Lead free compliant version identified with NSF61 mark on meter

---

**Type:** DCDA
**Manufacturer:** Watts
**Model:** LF757DCDAGV
**Size:** 2 1/2
**Orientation:** VU
**Meters:** (O)
**Manual:** 9
**0.25% Pb:** Yes
**Spare Parts Only:** No
**Approved:** 08-Jan-2014
**Renewed:** 08-Jan-2017
**Bypass:** Watts LF007M3QT 3/4" (VU)
**Shutoffs:** (zzz)
**Notes:** Lead free compliant version identified with NSF61 mark on meter


2018 © University of Southern California

**Type:** DCDA
**Manufacturer:** Watts
**Model:** LF757DCDAGV
**Size:** 3
**Orientation:** H
**Meters:** (O)
**Manual:** 9
**0.25% Pb:** Yes
**Spare Parts Only:** No
**Approved:** 08-Jan-2014
**Renewed:** 08-Jan-2017
**Bypass:** Watts LF007M3QT 3/4" (H)
**Shutoffs:** (zzz)
**Notes:** Lead free compliant version identified with NSF61 mark on meter

---

**Type:** DCDA
**Manufacturer:** Watts
**Model:** LF757DCDAGV
**Size:** 3
**Orientation:** VU
**Meters:** (O)
**Manual:** 9
**0.25% Pb:** Yes
**Spare Parts Only:** No
**Approved:** 08-Jan-2014
**Renewed:** 08-Jan-2017
**Bypass:** Watts LF007M3QT 3/4" (VU)
**Shutoffs:** (zzz)
**Notes:** Lead free compliant version identified with NSF61 mark on meter

---

**Type:** DCDA
**Manufacturer:** Watts
**Model:** LF757DCDAGV
**Size:** 4
**Orientation:** H
**Meters:** (O)
**Manual:** 9
**0.25% Pb:** Yes
**Spare Parts Only:** No
**Approved:** 08-Jan-2014
**Renewed:** 08-Jan-2017
**Bypass:** Watts LF007M3QT 3/4" (H)
**Shutoffs:** (zzz)
**Notes:** Lead free compliant version identified with NSF61 mark on meter

---

**Type:** DCDA
**Manufacturer:** Watts
**Model:** LF757DCDAGV
**Size:** 4
**Orientation:** VU
**Meters:** (O)
**Manual:** 9
**0.25% Pb:** Yes
**Spare Parts Only:** No
**Approved:** 08-Jan-2014
**Renewed:** 08-Jan-2017
**Bypass:** Watts LF007M3QT 3/4" (VU)
**Shutoffs:** (zzz)
**Notes:** Lead free compliant version identified with NSF61 mark on meter

---

**Type:** DCDA
**Manufacturer:** Watts
**Model:** LF757DCDAGV
**Size:** 6
**Orientation:** H
**Meters:** (O)
**Manual:** 9
**0.25% Pb:** Yes
**Spare Parts Only:** No
**Approved:** 08-Jan-2014
**Renewed:** 08-Jan-2017
**Bypass:** Watts LF007M3QT 3/4" (H)
**Shutoffs:** (zzz)
**Notes:** Lead free compliant version identified with NSF61 mark on meter

---

**Type:** DCDA
**Manufacturer:** Watts
**Model:** LF757DCDAGV
**Size:** 6
**Orientation:** VU
**Meters:** (O)
**Manual:** 9
**0.25% Pb:** Yes
**Spare Parts Only:** No
**Approved:** 08-Jan-2014
**Renewed:** 08-Jan-2017
**Bypass:** Watts LF007M3QT 3/4" (VU)
**Shutoffs:** (zzz)
**Notes:** Lead free compliant version identified with NSF61 mark on meter

**Type:** DCDA
**Manufacturer:** Watts
**Model:** LF757DCDAGV
**Size:** 8
**Orientation:** H
**Meters:** (O)
**Manual:** 9
**0.25% Pb:** Yes
**Spare Parts Only:** No
**Approved:** 08-Jan-2014
**Renewed:** 08-Jan-2017
**Bypass:** Watts LF007M3QT 3/4" (H)
**Shutoffs:** (zzz)
**Notes:** Lead free compliant version identified with NSF61 mark on meter

---

**Type:** DCDA
**Manufacturer:** Watts
**Model:** LF757DCDAGV
**Size:** 8
**Orientation:** VU
**Meters:** (O)
**Manual:** 9
**0.25% Pb:** Yes
**Spare Parts Only:** No
**Approved:** 08-Jan-2014
**Renewed:** 08-Jan-2017
**Bypass:** Watts LF007M3QT 3/4" (VU)
**Shutoffs:** (zzz)
**Notes:** Lead free compliant version identified with NSF61 mark on meter

---

**Type:** DCDA
**Manufacturer:** Watts
**Model:** LF757DCDAGV
**Size:** 10
**Orientation:** H
**Meters:** (O)
**Manual:** 9
**0.25% Pb:** Yes
**Spare Parts Only:** No
**Approved:** 08-Jan-2014
**Renewed:** 08-Jan-2017
**Bypass:** Watts LF007M3QT 3/4" (H)
**Shutoffs:** (zzz)
**Notes:** Lead free compliant version identified with NSF61 mark on meter

---

**Type:** DCDA
**Manufacturer:** Watts
**Model:** LF757DCDAGV
**Size:** 10
**Orientation:** VU
**Meters:** (O)
**Manual:** 9
**0.25% Pb:** Yes
**Spare Parts Only:** No
**Approved:** 08-Jan-2014
**Renewed:** 08-Jan-2017
**Bypass:** Watts LF007M3QT 3/4" (VU)
**Shutoffs:** (zzz)
**Notes:** Lead free compliant version identified with NSF61 mark on meter

---

**Type:** DCDA
**Manufacturer:** Watts
**Model:** LF757NDCDABF
**Size:** 2 1/2
**Orientation:** VUVD
**Meters:** (O)
**Manual:** 9
**0.25% Pb:** Yes
**Spare Parts Only:** No
**Approved:** 08-Jan-2014
**Renewed:** 08-Jan-2017
**Bypass:** Watts LF007M3QT 3/4" (H)
**Shutoffs:** (yyy)
**Notes:** Lead free compliant version identified with NSF61 mark on meter

---

**Type:** DCDA
**Manufacturer:** Watts
**Model:** LF757NDCDABF
**Size:** 3
**Orientation:** VUVD
**Meters:** (O)
**Manual:** 9
**0.25% Pb:** Yes
**Spare Parts Only:** No
**Approved:** 08-Jan-2014
**Renewed:** 08-Jan-2017
**Bypass:** Watts LF007M3QT 3/4" (H)
**Shutoffs:** (yyy)
**Notes:** Lead free compliant version identified with NSF61 mark on meter


2018 © University of Southern California

**Type:** DCDA
**Manufacturer:** Watts
**Model:** LF757NDCDABF
**Size:** 4
**Orientation:** VUVD
**Meters:** (O)
**Manual:** 9
**0.25% Pb:** Yes
**Spare Parts Only:** No
**Approved:** 08-Jan-2014
**Renewed:** 08-Jan-2017
**Bypass:** Watts LF007M3QT 3/4" (H)
**Shutoffs:** (yyy)
**Notes:** Lead free compliant version identified with NSF61 mark on meter

---

**Type:** DCDA
**Manufacturer:** Watts
**Model:** LF757NDCDABF
**Size:** 6
**Orientation:** VUVD
**Meters:** (O)
**Manual:** 9
**0.25% Pb:** Yes
**Spare Parts Only:** No
**Approved:** 08-Jan-2014
**Renewed:** 08-Jan-2017
**Bypass:** Watts LF007M3QT 3/4" (H)
**Shutoffs:** (yyy)
**Notes:** Lead free compliant version identified with NSF61 mark on meter

---

**Type:** DCDA
**Manufacturer:** Watts
**Model:** LF757NDCDABF
**Size:** 8
**Orientation:** VUVD
**Meters:** (O)
**Manual:** 9
**0.25% Pb:** Yes
**Spare Parts Only:** No
**Approved:** 08-Jan-2014
**Renewed:** 08-Jan-2017
**Bypass:** Watts LF007M3QT 3/4" (H)
**Shutoffs:** (yyy)
**Notes:** Lead free compliant version identified with NSF61 mark on meter

---

**Type:** DCDA
**Manufacturer:** Watts
**Model:** LF757NDCDABF
**Size:** 10
**Orientation:** VUVD
**Meters:** (O)
**Manual:** 9
**0.25% Pb:** Yes
**Spare Parts Only:** No
**Approved:** 08-Jan-2014
**Renewed:** 08-Jan-2017
**Bypass:** Watts LF007M3QT 3/4" (H)
**Shutoffs:** (yyy)
**Notes:** Lead free compliant version identified with NSF61 mark on meter

---

**Type:** DCDA
**Manufacturer:** Watts
**Model:** LF757NDCDAGV
**Size:** 2 1/2
**Orientation:** VUVD
**Meters:** (O)
**Manual:** 9
**0.25% Pb:** Yes
**Spare Parts Only:** No
**Approved:** 08-Jan-2014
**Renewed:** 08-Jan-2017
**Bypass:** Watts LF007M3QT 3/4" (H)
**Shutoffs:** (zzz)
**Notes:** Lead free compliant version identified with NSF61 mark on meter

---

**Type:** DCDA
**Manufacturer:** Watts
**Model:** LF757NDCDAGV
**Size:** 3
**Orientation:** VUVD
**Meters:** (O)
**Manual:** 9
**0.25% Pb:** Yes
**Spare Parts Only:** No
**Approved:** 08-Jan-2014
**Renewed:** 08-Jan-2017
**Bypass:** Watts LF007M3QT 3/4" (H)
**Shutoffs:** (zzz)
**Notes:** Lead free compliant version identified with NSF61 mark on meter

**Type:** DCDA
**Manufacturer:** Watts
**Model:** LF757NDCDAGV
**Size:** 4
**Orientation:** VUVD
**Meters:** (O)
**Manual:** 9
**0.25% Pb:** Yes
**Spare Parts Only:** No
**Approved:** 08-Jan-2014
**Renewed:** 08-Jan-2017
**Bypass:** Watts LF007M3QT 3/4" (H)
**Shutoffs:** (zzz)
**Notes:** Lead free compliant version identified with NSF61 mark on meter

---

**Type:** DCDA
**Manufacturer:** Watts
**Model:** LF757NDCDAGV
**Size:** 6
**Orientation:** VUVD
**Meters:** (O)
**Manual:** 9
**0.25% Pb:** Yes
**Spare Parts Only:** No
**Approved:** 08-Jan-2014
**Renewed:** 08-Jan-2017
**Bypass:** Watts LF007M3QT 3/4" (H)
**Shutoffs:** (zzz)
**Notes:** Lead free compliant version identified with NSF61 mark on meter

---

**Type:** DCDA
**Manufacturer:** Watts
**Model:** LF757NDCDAGV
**Size:** 8
**Orientation:** VUVD
**Meters:** (O)
**Manual:** 9
**0.25% Pb:** Yes
**Spare Parts Only:** No
**Approved:** 08-Jan-2014
**Renewed:** 08-Jan-2017
**Bypass:** Watts LF007M3QT 3/4" (H)
**Shutoffs:** (zzz)
**Notes:** Lead free compliant version identified with NSF61 mark on meter

---

**Type:** DCDA
**Manufacturer:** Watts
**Model:** LF757NDCDAGV
**Size:** 10
**Orientation:** VUVD
**Meters:** (O)
**Manual:** 9
**0.25% Pb:** Yes
**Spare Parts Only:** No
**Approved:** 08-Jan-2014
**Renewed:** 08-Jan-2017
**Bypass:** Watts LF007M3QT 3/4" (H)
**Shutoffs:** (zzz)
**Notes:** Lead free compliant version identified with NSF61 mark on meter

---

**Type:** DCDA
**Manufacturer:** Wilkins
**Model:** 350ADA
**Size:** 2 1/2
**Orientation:** H
**Meters:** (M),A,B,C,D,E,F,G,H,I,J,K,L,N,O,P,Q,T
**Manual:** 9
**0.25% Pb:** No
**Spare Parts Only:** No
**Approved:** 22-Jun-2005
**Renewed:** 22-Jun-2017
**Bypass:** Wilkins 950XLD 3/4" (H)
**Shutoffs:** (qqq),ttt,yyy,zzz,uuuu,vvvv,xxxx,yyyy,kkkkk,lllll,iiiiii,jjjjjj,llllll,mmmmmm

**Type:** DCDA
**Manufacturer:** Wilkins
**Model:** 350ADA
**Size:** 2 1/2
**Orientation:** H
**Meters:** (O), M
**Manual:** 9
**0.25% Pb:** Yes
**Spare Parts Only:** No
**Approved:** 18-Feb-2014
**Renewed:** 18-Feb-2017
**Bypass:** Wilkins 950XLD 3/4" (H)
**Shutoffs:** (qqq),ttt,www,yyy,xxxx,yyyy,kkkkk,lllll,llllll,mmmmmm
**Notes:** Lead free compliant version: Starting Serial # V39030; By-pass Assembly Starting Serial # 3863325 and identified with NSF61 mark on meter


2018 © University of Southern California

**Type:** DCDA **Manufacturer:** Wilkins **Model:** 350ADA
**Size:** 2 1/2 **Orientation:** VU **Meters:** (M),A,B,C,D,E,F,G,H,I,J,K,L,N,O,P,Q,T
**Manual:** 9 **0.25% Pb:** No **Spare Parts Only:** No
**Approved:** 22-Jun-2005 **Renewed:** 22-Jun-2017 **Bypass:** Wilkins 950XLD 3/4" (VU)
**Shutoffs:** (qqq),ttt,yyy,zzz,uuuu,vvvv,xxxx,yyyy,kkkkk,lllll,iiiiii,jjjjjj,llllll,mmmmmm

---

**Type:** DCDA **Manufacturer:** Wilkins **Model:** 350ADA
**Size:** 2 1/2 **Orientation:** VU **Meters:** (O), M
**Manual:** 9 **0.25% Pb:** Yes **Spare Parts Only:** No
**Approved:** 18-Feb-2014 **Renewed:** 18-Feb-2017 **Bypass:** Wilkins 950XLD 3/4" (VU)
**Shutoffs:** (qqq),ttt,www,yyy,xxxx,yyyy,kkkkk,lllll,llllll,mmmmmm
**Notes:** Lead free compliant version: Starting Serial # V39030; By-pass Assembly Starting Serial # 3863325 and identified with NSF61 mark on meter

---

**Type:** DCDA **Manufacturer:** Wilkins **Model:** 350ADA
**Size:** 3 **Orientation:** H **Meters:** (M),A,B,C,D,E,F,G,H,I,J,K,L,N,O,P,Q,T
**Manual:** 9 **0.25% Pb:** No **Spare Parts Only:** No
**Approved:** 22-Jun-2005 **Renewed:** 22-Jun-2017 **Bypass:** Wilkins 950XLD 3/4" (H)
**Shutoffs:** (qqq),ttt,yyy,zzz,uuuu,vvvv,xxxx,yyyy,kkkkk,lllll,iiiiii,jjjjjj,llllll,mmmmmm

---

**Type:** DCDA **Manufacturer:** Wilkins **Model:** 350ADA
**Size:** 3 **Orientation:** H **Meters:** (O), M
**Manual:** 9 **0.25% Pb:** Yes **Spare Parts Only:** No
**Approved:** 18-Feb-2014 **Renewed:** 18-Feb-2017 **Bypass:** Wilkins 950XLD 3/4" (H)
**Shutoffs:** (qqq),ttt,www,yyy,xxxx,yyyy,kkkkk,lllll,llllll,mmmmmm
**Notes:** Lead free compliant version: Starting Serial # V39030; By-pass Assembly Starting Serial # 3863325 and identified with NSF61 mark on meter

---

**Type:** DCDA **Manufacturer:** Wilkins **Model:** 350ADA
**Size:** 3 **Orientation:** VU **Meters:** (M),A,B,C,D,E,F,G,H,I,J,K,L,N,O,P,Q,T
**Manual:** 9 **0.25% Pb:** No **Spare Parts Only:** No
**Approved:** 22-Jun-2005 **Renewed:** 22-Jun-2017 **Bypass:** Wilkins 950XLD 3/4" (VU)
**Shutoffs:** (qqq),ttt,yyy,zzz,uuuu,vvvv,xxxx,yyyy,kkkkk,lllll,iiiiii,jjjjjj,llllll,mmmmmm

**Type:** DCDA **Manufacturer:** Wilkins **Model:** 350ADA
**Size:** 3 **Orientation:** VU **Meters:** (O), M
**Manual:** 9 **0.25% Pb:** Yes **Spare Parts Only:** No
**Approved:** 18-Feb-2014 **Renewed:** 18-Feb-2017 **Bypass:** Wilkins 950XLD 3/4" (VU)
**Shutoffs:** (qqq),ttt,www,yyy,xxxx,yyyy,kkkkk,lllll,llllll,mmmmmm
**Notes:** Lead free compliant version: Starting Serial # V39030; By-pass Assembly Starting Serial # 3863325 and identified with NSF61 mark on meter

---

**Type:** DCDA **Manufacturer:** Wilkins **Model:** 350ADA
**Size:** 4 **Orientation:** H **Meters:** (M),A,B,C,D,E,F,G,H,I,J,K,L,N,O,P,Q,T
**Manual:** 9 **0.25% Pb:** No **Spare Parts Only:** No
**Approved:** 16-Mar-2004 **Renewed:** 16-Mar-2016 **Bypass:** Wilkins 950XLD 3/4" (H)
**Shutoffs:** (qqq),ttt,www,yyy,zzz,eeee,uuuu,vvvv,xxxx,yyyy,kkkkk,lllll,iiiiii,jjjjjj,llllll,mmmmmm

---

**Type:** DCDA **Manufacturer:** Wilkins **Model:** 350ADA
**Size:** 4 **Orientation:** H **Meters:** (O), M
**Manual:** 9 **0.25% Pb:** Yes **Spare Parts Only:** No
**Approved:** 18-Feb-2014 **Renewed:** 18-Feb-2017 **Bypass:** Wilkins 950XLD 3/4" (H)
**Shutoffs:** (qqq),ttt,www,yyy,xxxx,yyyy,kkkkk,lllll,llllll,mmmmmm
**Notes:** Lead free compliant version: Starting Serial # V39030; By-pass Assembly Starting Serial # 3863325 and identified with NSF61 mark on meter

---

**Type:** DCDA **Manufacturer:** Wilkins **Model:** 350ADA
**Size:** 4 **Orientation:** VU **Meters:** (M),A,B,C,D,E,F,G,H,I,J,K,L,N,O,P,Q,T
**Manual:** 9 **0.25% Pb:** No **Spare Parts Only:** No
**Approved:** 16-Mar-2004 **Renewed:** 16-Mar-2016 **Bypass:** Wilkins 950XLD 3/4" (VU)
**Shutoffs:** (qqq),ttt,www,yyy,zzz,eeee,uuuu,vvvv,xxxx,yyyy,kkkkk,lllll,iiiiii,jjjjjj,llllll,mmmmmm

---

**Type:** DCDA **Manufacturer:** Wilkins **Model:** 350ADA
**Size:** 4 **Orientation:** VU **Meters:** (O), M
**Manual:** 9 **0.25% Pb:** Yes **Spare Parts Only:** No
**Approved:** 18-Feb-2014 **Renewed:** 18-Feb-2017 **Bypass:** Wilkins 950XLD 3/4" (VU)
**Shutoffs:** (qqq),ttt,www,yyy,xxxx,yyyy,kkkkk,lllll,llllll,mmmmmm
**Notes:** Lead free compliant version: Starting Serial # V39030; By-pass Assembly Starting Serial # 3863325 and identified with NSF61 mark on meter


2018 © University of Southern California

**Type:** DCDA **Manufacturer:** Wilkins **Model:** 350ADA
**Size:** 6 **Orientation:** H **Meters:** (M),A,B,C,D,E,F,G,H,I,J,K,L,N,O,P,Q,T
**Manual:** 9 **0.25% Pb:** No **Spare Parts Only:** No
**Approved:** 25-Nov-2003 **Renewed:** 25-Nov-2015 **Bypass:** Wilkins 950XLD 3/4" (H)
**Shutoffs:** (qqq),ttt,www,yyy,zzz,eeee,uuuu,vvvv,xxxx,yyyy,kkkkk,lllll,iiiiii,jjjjjj,llllll,mmmmmm

---

**Type:** DCDA **Manufacturer:** Wilkins **Model:** 350ADA
**Size:** 6 **Orientation:** H **Meters:** (O), M
**Manual:** 9 **0.25% Pb:** Yes **Spare Parts Only:** No
**Approved:** 18-Feb-2014 **Renewed:** 18-Feb-2017 **Bypass:** Wilkins 950XLD 3/4" (H)
**Shutoffs:** (qqq),ttt,www,yyy,xxxx,yyyy,kkkkk,lllll,llllll,mmmmmm
**Notes:** Lead free compliant version: Starting Serial # V39030; By-pass Assembly Starting Serial # 3863325 and identified with NSF61 mark on meter

---

**Type:** DCDA **Manufacturer:** Wilkins **Model:** 350ADA
**Size:** 6 **Orientation:** VU **Meters:** (M),A,B,C,D,E,F,G,H,I,J,K,L,N,O,P,Q,T
**Manual:** 9 **0.25% Pb:** No **Spare Parts Only:** No
**Approved:** 25-Nov-2003 **Renewed:** 25-Nov-2015 **Bypass:** Wilkins 950XLD 3/4" (VU)
**Shutoffs:** (qqq),ttt,www,yyy,zzz,eeee,uuuu,vvvv,xxxx,yyyy,kkkkk,lllll,iiiiii,jjjjjj,llllll,mmmmmm

---

**Type:** DCDA **Manufacturer:** Wilkins **Model:** 350ADA
**Size:** 6 **Orientation:** VU **Meters:** (O), M
**Manual:** 9 **0.25% Pb:** Yes **Spare Parts Only:** No
**Approved:** 18-Feb-2014 **Renewed:** 18-Feb-2017 **Bypass:** Wilkins 950XLD 3/4" (VU)
**Shutoffs:** (qqq),ttt,www,yyy,xxxx,yyyy,kkkkk,lllll,llllll,mmmmmm
**Notes:** Lead free compliant version: Starting Serial # V39030; By-pass Assembly Starting Serial # 3863325 and identified with NSF61 mark on meter

---

**Type:** DCDA **Manufacturer:** Wilkins **Model:** 350ADA
**Size:** 8 **Orientation:** H **Meters:** (N),F,G,H,I,J,K,L,M,O,P,Q,T
**Manual:** 9 **0.25% Pb:** No **Spare Parts Only:** No
**Approved:** 12-Feb-2004 **Renewed:** 12-Feb-2016 **Bypass:** Wilkins 950XLD 3/4" (H)
**Shutoffs:** (qqq),ttt,www,yyy,zzz,eeee,uuuu,vvvv,xxxx,yyyy,kkkkk,lllll,iiiiii,jjjjjj,llllll,mmmmmm

**Type:** DCDA **Manufacturer:** Wilkins **Model:** 350ADA
**Size:** 8 **Orientation:** H **Meters:** (O), M
**Manual:** 9 **0.25% Pb:** Yes **Spare Parts Only:** No
**Approved:** 18-Feb-2014 **Renewed:** 18-Feb-2017 **Bypass:** Wilkins 950XLD 3/4" (H)
**Shutoffs:** (qqq),ttt,www,yyy,xxxx,yyyy,kkkkk,lllll,llllll,mmmmmm
**Notes:** Lead free compliant version: Starting Serial # V39030; By-pass Assembly Starting Serial # 3863325 and identified with NSF61 mark on meter

---

**Type:** DCDA **Manufacturer:** Wilkins **Model:** 350ADA
**Size:** 8 **Orientation:** VU **Meters:** (N),F,G,H,I,J,K,L,M,O,P,Q,T
**Manual:** 9 **0.25% Pb:** No **Spare Parts Only:** No
**Approved:** 12-Feb-2004 **Renewed:** 12-Feb-2016 **Bypass:** Wilkins 950XLD 3/4" (VU)
**Shutoffs:** (qqq),ttt,www,yyy,zzz,eeee,uuuu,vvvv,xxxx,yyyy,kkkkk,lllll,iiiiii,jjjjjj,llllll,mmmmmm

---

**Type:** DCDA **Manufacturer:** Wilkins **Model:** 350ADA
**Size:** 8 **Orientation:** VU **Meters:** (O), M
**Manual:** 9 **0.25% Pb:** Yes **Spare Parts Only:** No
**Approved:** 18-Feb-2014 **Renewed:** 18-Feb-2017 **Bypass:** Wilkins 950XLD 3/4" (VU)
**Shutoffs:** (qqq),ttt,www,yyy,xxxx,yyyy,kkkkk,lllll,llllll,mmmmmm
**Notes:** Lead free compliant version: Starting Serial # V39030; By-pass Assembly Starting Serial # 3863325 and identified with NSF61 mark on meter

---

**Type:** DCDA **Manufacturer:** Wilkins **Model:** 350ADA
**Size:** 10 **Orientation:** H **Meters:** (N),F,G,H,I,J,K,L,M,O,P,Q,T
**Manual:** 9 **0.25% Pb:** No **Spare Parts Only:** No
**Approved:** 06-Apr-2006 **Renewed:** 06-Apr-2018 **Bypass:** Wilkins 950XLD 3/4" (H)
**Shutoffs:** (qqq),ttt,yyy,uuuu,vvvv,xxxx,yyyy,kkkkk,lllll,iiiiii,jjjjjj,llllll,mmmmmm

---

**Type:** DCDA **Manufacturer:** Wilkins **Model:** 350ADA
**Size:** 10 **Orientation:** H **Meters:** (O), M
**Manual:** 9 **0.25% Pb:** Yes **Spare Parts Only:** No
**Approved:** 18-Feb-2014 **Renewed:** 18-Feb-2017 **Bypass:** Wilkins 950XLD 3/4" (H)
**Shutoffs:** (qqq),ttt,www,yyy,xxxx,yyyy,kkkkk,lllll,llllll,mmmmmm
**Notes:** Lead free compliant version: Starting Serial # V39030; By-pass Assembly Starting Serial # 3863325 and identified with NSF61 mark on meter

---

**Type:** DCDA **Manufacturer:** Wilkins **Model:** 350ADA
**Size:** 10 **Orientation:** VU **Meters:** (N),F,G,H,I,J,K,L,M,O,P,Q,T
**Manual:** 9 **0.25% Pb:** No **Spare Parts Only:** No
**Approved:** 06-Apr-2006 **Renewed:** 06-Apr-2018 **Bypass:** Wilkins 950XLD 3/4" (VU)
**Shutoffs:** (qqq),ttt,yyy,uuuu,vvvv,xxxx,yyyy,kkkkk,lllll,iiiiii,jjjjjj,llllll,mmmmmm


2018 © University of Southern California

**Type:** DCDA **Manufacturer:** Wilkins **Model:** 350ADA
**Size:** 10 **Orientation:** VU **Meters:** (O), M
**Manual:** 9 **0.25% Pb:** Yes **Spare Parts Only:** No
**Approved:** 18-Feb-2014 **Renewed:** 18-Feb-2017 **Bypass:** Wilkins 950XLD 3/4" (VU)
**Shutoffs:** (qqq),ttt,www,yyy,xxxx,yyyy,kkkkk,lllll,llllll,mmmmmm
**Notes:** Lead free compliant version: Starting Serial # V39030; By-pass Assembly Starting Serial # 3863325 and identified with NSF61 mark on meter

---

**Type:** DCDA **Manufacturer:** Wilkins **Model:** 350ADAR
**Size:** 2 1/2 **Orientation:** H **Meters:** (M),A,B,C,D,E,F,G,H,I,J,K,L,N,O,P,Q,T
**Manual:** 9 **0.25% Pb:** No **Spare Parts Only:** No
**Approved:** 16-Jun-2010 **Renewed:** 16-Jun-2016 **Bypass:** Wilkins 950XLD 3/4" (H)
**Shutoffs:** (qqq),ttt,yyy,zzz,uuuu,vvvv,xxxx,yyyy,kkkkk,lllll,iiiiii,jjjjjj,llllll,mmmmmm
**Notes:** Integral grooved spool between the #2 ck and #2 SOV - assembly length: min. 34 1/4" and max. 47 1/8"

---

**Type:** DCDA **Manufacturer:** Wilkins **Model:** 350ADAR
**Size:** 2 1/2 **Orientation:** H **Meters:** (O), M
**Manual:** 9 **0.25% Pb:** Yes **Spare Parts Only:** No
**Approved:** 18-Feb-2014 **Renewed:** 18-Feb-2017 **Bypass:** Wilkins 950XLD 3/4" (H)
**Shutoffs:** (qqq),ttt,www,yyy,xxxx,yyyy,kkkkk,lllll,llllll,mmmmmm
**Notes:** Integral grooved spool between the #2 ck and #2 SOV - assembly length: min. 34 1/4" and max. 47 1/8" and Lead free compliant version: Starting Serial # E00687; By-pass Assembly Starting Serial # 3863325 and identified with NSF61 mark on meter

---

**Type:** DCDA **Manufacturer:** Wilkins **Model:** 350ADAR
**Size:** 2 1/2 **Orientation:** VU **Meters:** (M),A,B,C,D,E,F,G,H,I,J,K,L,N,O,P,Q,T
**Manual:** 9 **0.25% Pb:** No **Spare Parts Only:** No
**Approved:** 16-Jun-2010 **Renewed:** 16-Jun-2016 **Bypass:** Wilkins 950XLD 3/4" (VU)
**Shutoffs:** (qqq),ttt,yyy,zzz,uuuu,vvvv,xxxx,yyyy,kkkkk,lllll,iiiiii,jjjjjj,llllll,mmmmmm
**Notes:** Integral grooved spool between the #2 ck and #2 SOV - assembly length: min. 34 1/4" and max. 47 1/8"

---

**Type:** DCDA **Manufacturer:** Wilkins **Model:** 350ADAR
**Size:** 2 1/2 **Orientation:** VU **Meters:** (O), M
**Manual:** 9 **0.25% Pb:** Yes **Spare Parts Only:** No
**Approved:** 18-Feb-2014 **Renewed:** 18-Feb-2017 **Bypass:** Wilkins 950XLD 3/4" (VU)
**Shutoffs:** (qqq),ttt,www,yyy,xxxx,yyyy,kkkkk,lllll,llllll,mmmmmm
**Notes:** Integral grooved spool between the #2 ck and #2 SOV - assembly length: min. 34 1/4" and max. 47 1/8" and Lead free compliant version: Starting Serial # E00687; By-pass Assembly Starting Serial # 3863325 and identified with NSF61 mark on meter

**Type:** DCDA **Manufacturer:** Wilkins **Model:** 350ADAR
**Size:** 3 **Orientation:** H **Meters:** (M),A,B,C,D,E,F,G,H,I,J,K,L,N,O,P,Q,T
**Manual:** 9 **0.25% Pb:** No **Spare Parts Only:** No
**Approved:** 16-Jun-2010 **Renewed:** 16-Jun-2016 **Bypass:** Wilkins 950XLD 3/4" (H)
**Shutoffs:** (qqq),ttt,yyy,zzz,uuuu,vvvv,xxxx,yyyy,kkkkk,lllll,iiiiii,jjjjjj,llllll,mmmmmm
**Notes:** Integral grooved spool between the #2 ck and #2 SOV - assembly length: min. 34 3/4" and max. 48 1/8"

---

**Type:** DCDA **Manufacturer:** Wilkins **Model:** 350ADAR
**Size:** 3 **Orientation:** H **Meters:** (O), M
**Manual:** 9 **0.25% Pb:** Yes **Spare Parts Only:** No
**Approved:** 18-Feb-2014 **Renewed:** 18-Feb-2017 **Bypass:** Wilkins 950XLD 3/4" (H)
**Shutoffs:** (qqq),ttt,www,yyy,xxxx,yyyy,kkkkk,lllll,llllll,mmmmmm
**Notes:** Integral grooved spool between the #2 ck and #2 SOV - assembly length: min. 34 3/4" and max. 48 1/8" and Lead free compliant version: Starting Serial # E00687; By-pass Assembly Starting Serial # 3863325 and identified with NSF61 mark on meter

---

**Type:** DCDA **Manufacturer:** Wilkins **Model:** 350ADAR
**Size:** 3 **Orientation:** VU **Meters:** (M),A,B,C,D,E,F,G,H,I,J,K,L,N,O,P,Q,T
**Manual:** 9 **0.25% Pb:** No **Spare Parts Only:** No
**Approved:** 16-Jun-2010 **Renewed:** 16-Jun-2016 **Bypass:** Wilkins 950XLD 3/4" (VU)
**Shutoffs:** (qqq),ttt,yyy,zzz,uuuu,vvvv,xxxx,yyyy,kkkkk,lllll,iiiiii,jjjjjj,llllll,mmmmmm
**Notes:** Integral grooved spool between the #2 ck and #2 SOV - assembly length: min. 34 3/4" and max. 48 1/8"

---

**Type:** DCDA **Manufacturer:** Wilkins **Model:** 350ADAR
**Size:** 3 **Orientation:** VU **Meters:** (O), M
**Manual:** 9 **0.25% Pb:** Yes **Spare Parts Only:** No
**Approved:** 18-Feb-2014 **Renewed:** 18-Feb-2017 **Bypass:** Wilkins 950XLD 3/4" (VU)
**Shutoffs:** (qqq),ttt,www,yyy,xxxx,yyyy,kkkkk,lllll,llllll,mmmmmm
**Notes:** Integral grooved spool between the #2 ck and #2 SOV - assembly length: min. 34 3/4" and max. 48 1/8" and Lead free compliant version: Starting Serial # E00687; By-pass Assembly Starting Serial # 3863325 and identified with NSF61 mark on meter

---

**Type:** DCDA **Manufacturer:** Wilkins **Model:** 350ADAR
**Size:** 4 **Orientation:** H **Meters:** (M),A,B,C,D,E,F,G,H,I,J,K,L,N,O,P,Q,T
**Manual:** 9 **0.25% Pb:** No **Spare Parts Only:** No
**Approved:** 25-Mar-2010 **Renewed:** 25-Mar-2016 **Bypass:** Wilkins 950XLD 3/4" (VU)
**Shutoffs:** (qqq),ttt,www,yyy,zzz,eeee,uuuu,vvvv,xxxx,yyyy,kkkkk,lllll,iiiiii,jjjjjj,llllll,mmmmmm
**Notes:** Integral grooved spool between the #2 ck and #2 SOV - assembly length: min. 35 3/4" and max. 62 1/4"


2018 © University of Southern California

**Type:** DCDA **Manufacturer:** Wilkins **Model:** 350ADAR
**Size:** 4 **Orientation:** H **Meters:** (O), M
**Manual:** 9 **0.25% Pb:** Yes **Spare Parts Only:** No
**Approved:** 18-Feb-2014 **Renewed:** 18-Feb-2017 **Bypass:** Wilkins 950XLD 3/4" (VU)
**Shutoffs:** (qqq),ttt,www,yyy,xxxx,yyyy,kkkkk,lllll,llllll,mmmmmm
**Notes:** Integral grooved spool between the #2 ck and #2 SOV - assembly length: min. 35 3/4" and max. 62 1/4" and Lead free compliant version: Starting Serial # E00687; By-pass Assembly Starting Serial # 3863325 and identified with NSF61 mark on meter

---

**Type:** DCDA **Manufacturer:** Wilkins **Model:** 350ADAR
**Size:** 4 **Orientation:** VU **Meters:** (M),A,B,C,D,E,F,G,H,I,J,K,L,N,O,P,Q,T
**Manual:** 9 **0.25% Pb:** No **Spare Parts Only:** No
**Approved:** 25-Mar-2010 **Renewed:** 25-Mar-2016 **Bypass:** Wilkins 950XLD 3/4" (H)
**Shutoffs:** (qqq),ttt,www,yyy,zzz,eeee,uuuu,vvvv,xxxx,yyyy,kkkkk,lllll,iiiiii,jjjjjj,llllll,mmmmmm
**Notes:** Integral grooved spool between the #2 ck and #2 SOV - assembly length: min. 35 3/4" and max. 62 1/4"

---

**Type:** DCDA **Manufacturer:** Wilkins **Model:** 350ADAR
**Size:** 4 **Orientation:** VU **Meters:** (O), M
**Manual:** 9 **0.25% Pb:** Yes **Spare Parts Only:** No
**Approved:** 18-Feb-2014 **Renewed:** 18-Feb-2017 **Bypass:** Wilkins 950XLD 3/4" (H)
**Shutoffs:** (qqq),ttt,www,yyy,xxxx,yyyy,kkkkk,lllll,llllll,mmmmmm
**Notes:** Integral grooved spool between the #2 ck and #2 SOV - assembly length: min. 35 3/4" and max. 62 1/4" and Lead free compliant version: Starting Serial # E00687; By-pass Assembly Starting Serial # 3863325 and identified with NSF61 mark on meter

---

**Type:** DCDA **Manufacturer:** Wilkins **Model:** 350ADAR
**Size:** 6 **Orientation:** H **Meters:** (M),A,B,C,D,E,F,G,H,I,J,K,L,N,O,P,Q,T
**Manual:** 9 **0.25% Pb:** No **Spare Parts Only:** No
**Approved:** 25-Mar-2010 **Renewed:** 25-Mar-2016 **Bypass:** Wilkins 950XLD 3/4" (VU)
**Shutoffs:** (qqq),ttt,www,yyy,zzz,eeee,uuuu,vvvv,xxxx,yyyy,kkkkk,lllll,iiiiii,jjjjjj,llllll,mmmmmm
**Notes:** Integral grooved spool between the #2 ck and #2 SOV - assembly length: min. 42 1/2" and max. 71 1/4"

---

**Type:** DCDA **Manufacturer:** Wilkins **Model:** 350ADAR
**Size:** 6 **Orientation:** H **Meters:** (O), M
**Manual:** 9 **0.25% Pb:** Yes **Spare Parts Only:** No
**Approved:** 18-Feb-2014 **Renewed:** 18-Feb-2017 **Bypass:** Wilkins 950XLD 3/4" (VU)
**Shutoffs:** (qqq),ttt,www,yyy,xxxx,yyyy,kkkkk,lllll,llllll,mmmmmm
**Notes:** Integral grooved spool between the #2 ck and #2 SOV - assembly length: min. 42 1/2" and max. 71 1/4" and Lead free compliant version: Starting Serial # E00687; By-pass Assembly Starting Serial # 3863325 and identified with NSF61 mark on meter

**Type:** DCDA **Manufacturer:** Wilkins **Model:** 350ADAR
**Size:** 6 **Orientation:** VU **Meters:** (M),A,B,C,D,E,F,G,H,I,J,K,L,N,O,P,Q,T
**Manual:** 9 **0.25% Pb:** No **Spare Parts Only:** No
**Approved:** 25-Mar-2010 **Renewed:** 25-Mar-2016 **Bypass:** Wilkins 950XLD 3/4" (H)
**Shutoffs:** (qqq),ttt,www,yyy,zzz,eeee,uuuu,vvvv,xxxx,yyyy,kkkkk,lllll,iiiiii,jjjjjj,llllll,mmmmmm
**Notes:** Integral grooved spool between the #2 ck and #2 SOV - assembly length: min. 42 1/2" and max. 71 1/4"

---

**Type:** DCDA **Manufacturer:** Wilkins **Model:** 350ADAR
**Size:** 6 **Orientation:** VU **Meters:** (O), M
**Manual:** 9 **0.25% Pb:** Yes **Spare Parts Only:** No
**Approved:** 18-Feb-2014 **Renewed:** 18-Feb-2017 **Bypass:** Wilkins 950XLD 3/4" (H)
**Shutoffs:** (qqq),ttt,www,yyy,xxxx,yyyy,kkkkk,lllll,llllll,mmmmmm
**Notes:** Integral grooved spool between the #2 ck and #2 SOV - assembly length: min. 42 1/2" and max. 71 1/4" and Lead free compliant version: Starting Serial # E00687; By-pass Assembly Starting Serial # 3863325 and identified with NSF61 mark on meter

---

**Type:** DCDA **Manufacturer:** Wilkins **Model:** 350ADAR
**Size:** 8 **Orientation:** H **Meters:** (M),A,B,C,D,E,F,G,H,I,J,K,L,N,O,P,Q,T
**Manual:** 9 **0.25% Pb:** No **Spare Parts Only:** No
**Approved:** 25-Mar-2010 **Renewed:** 25-Mar-2016 **Bypass:** Wilkins 950XLD 3/4" (VU)
**Shutoffs:** (qqq),ttt,www,yyy,zzz,eeee,uuuu,vvvv,xxxx,yyyy,kkkkk,lllll,iiiiii,jjjjjj,llllll,mmmmmm
**Notes:** Integral grooved spool between the #2 ck and #2 SOV - assembly length: min. 57 7/8" and max. 86"

---

**Type:** DCDA **Manufacturer:** Wilkins **Model:** 350ADAR
**Size:** 8 **Orientation:** H **Meters:** (O), M
**Manual:** 9 **0.25% Pb:** Yes **Spare Parts Only:** No
**Approved:** 18-Feb-2014 **Renewed:** 18-Feb-2017 **Bypass:** Wilkins 950XLD 3/4" (VU)
**Shutoffs:** (qqq),ttt,www,yyy,xxxx,yyyy,kkkkk,lllll,llllll,mmmmmm
**Notes:** Integral grooved spool between the #2 ck and #2 SOV - assembly length: min. 57 7/8" and max. 86" and Lead free compliant version: Starting Serial # E00687; By-pass Assembly Starting Serial # 3863325 and identified with NSF61 mark on meter

---

**Type:** DCDA **Manufacturer:** Wilkins **Model:** 350ADAR
**Size:** 8 **Orientation:** VU **Meters:** (M),A,B,C,D,E,F,G,H,I,J,K,L,N,O,P,Q,T
**Manual:** 9 **0.25% Pb:** No **Spare Parts Only:** No
**Approved:** 25-Mar-2010 **Renewed:** 25-Mar-2016 **Bypass:** Wilkins 950XLD 3/4" (H)
**Shutoffs:** (qqq),ttt,www,yyy,zzz,eeee,uuuu,vvvv,xxxx,yyyy,kkkkk,lllll,iiiiii,jjjjjj,llllll,mmmmmm
**Notes:** Integral grooved spool between the #2 ck and #2 SOV - assembly length: min. 57 7/8" and max. 86"


2018 © University of Southern California

**Type:** DCDA | **Manufacturer:** Wilkins | **Model:** 350ADAR
**Size:** 8 | **Orientation:** VU | **Meters:** (O), M
**Manual:** 9 | **0.25% Pb:** Yes | **Spare Parts Only:** No
**Approved:** 18-Feb-2014 | **Renewed:** 18-Feb-2017 | **Bypass:** Wilkins 950XLD 3/4" (H)
**Shutoffs:** (qqq),ttt,www,yyy,xxxx,yyyy,kkkkk,lllll,llllll,mmmmmm
**Notes:** Integral grooved spool between the #2 ck and #2 SOV - assembly length: min. 57 7/8" and max. 86" and Lead free compliant version: Starting Serial # E00687; By-pass Assembly Starting Serial # 3863325 and identified with NSF61 mark on meter

---

**Type:** DCDA | **Manufacturer:** Wilkins | **Model:** 350ADAR
**Size:** 10 | **Orientation:** H | **Meters:** (M),A,B,C,D,E,F,G,H,I,J,K,L,N,O,P,Q,T
**Manual:** 9 | **0.25% Pb:** No | **Spare Parts Only:** No
**Approved:** 25-Mar-2010 | **Renewed:** 25-Mar-2016 | **Bypass:** Wilkins 950XLD 3/4" (VU)
**Shutoffs:** (qqq),ttt,www,yyy,zzz,eeee,uuuu,vvvv,xxxx,yyyy,kkkkk,lllll,iiiiii,jjjjjj,llllll,mmmmmm
**Notes:** Integral grooved spool between the #2 ck and #2 SOV - assembly length: min. 61 3/8" and max. 100 5/8"

---

**Type:** DCDA | **Manufacturer:** Wilkins | **Model:** 350ADAR
**Size:** 10 | **Orientation:** H | **Meters:** (O), M
**Manual:** 9 | **0.25% Pb:** Yes | **Spare Parts Only:** No
**Approved:** 18-Feb-2014 | **Renewed:** 18-Feb-2017 | **Bypass:** Wilkins 950XLD 3/4" (VU)
**Shutoffs:** (qqq),ttt,www,yyy,xxxx,yyyy,kkkkk,lllll,llllll,mmmmmm
**Notes:** Integral grooved spool between the #2 ck and #2 SOV - assembly length: min. 61 3/8" and max. 100 5/8" and Lead free compliant version: Starting Serial # E00687; By-pass Assembly Starting Serial # 3863325 and identified with NSF61 mark on meter

---

**Type:** DCDA | **Manufacturer:** Wilkins | **Model:** 350ADAR
**Size:** 10 | **Orientation:** VU | **Meters:** (M),A,B,C,D,E,F,G,H,I,J,K,L,N,O,P,Q,T
**Manual:** 9 | **0.25% Pb:** No | **Spare Parts Only:** No
**Approved:** 25-Mar-2010 | **Renewed:** 25-Mar-2016 | **Bypass:** Wilkins 950XLD 3/4" (H)
**Shutoffs:** (qqq),ttt,www,yyy,zzz,eeee,uuuu,vvvv,xxxx,yyyy,kkkkk,lllll,iiiiii,jjjjjj,llllll,mmmmmm
**Notes:** Integral grooved spool between the #2 ck and #2 SOV - assembly length: min. 61 3/8" and max. 100 5/8"

---

**Type:** DCDA | **Manufacturer:** Wilkins | **Model:** 350ADAR
**Size:** 10 | **Orientation:** VU | **Meters:** (O), M
**Manual:** 9 | **0.25% Pb:** Yes | **Spare Parts Only:** No
**Approved:** 18-Feb-2014 | **Renewed:** 18-Feb-2017 | **Bypass:** Wilkins 950XLD 3/4" (H)
**Shutoffs:** (qqq),ttt,www,yyy,xxxx,yyyy,kkkkk,lllll,llllll,mmmmmm
**Notes:** Integral grooved spool between the #2 ck and #2 SOV - assembly length: min. 61 3/8" and max. 100 5/8" and Lead free compliant version: Starting Serial # E00687; By-pass Assembly Starting Serial # 3863325 and identified with NSF61 mark on meter

**Type:** DCDA **Manufacturer:** Wilkins **Model:** 350ASTDA
**Size:** 2 1/2 **Orientation:** H **Meters:** (N),G,H,I,J,K,L,M,O,P,Q,T
**Manual:** 10 **0.25% Pb:** No **Spare Parts Only:** No
**Approved:** 18-Apr-2013 **Renewed:** 18-Apr-2016 **Bypass:** Wilkins 950XLD 3/4" (H)
**Shutoffs:** (qqq),ttt,www,yyy,uuuu,vvvv,xxxx,yyyy,kkkkk,lllll,iiiiii,jjjjjj,llllll,mmmmmm

---

**Type:** DCDA **Manufacturer:** Wilkins **Model:** 350ASTDA
**Size:** 2 1/2 **Orientation:** H **Meters:** (O), M
**Manual:** 10 **0.25% Pb:** Yes **Spare Parts Only:** No
**Approved:** 18-Feb-2014 **Renewed:** 18-Feb-2017 **Bypass:** Wilkins 950XLD 3/4" (H)
**Shutoffs:** (qqq),ttt,www,yyy,uuuu,vvvv,xxxx,yyyy,kkkkk,lllll,iiiiii,jjjjjj,llllll,mmmmmm
**Notes:** Lead free compliant version: Starting Serial # 1458B; By-pass Assembly Starting Serial # 3863325 and identified with NSF61 mark on meter

---

**Type:** DCDA **Manufacturer:** Wilkins **Model:** 350ASTDA
**Size:** 2 1/2 **Orientation:** VU **Meters:** (N),G,H,I,J,K,L,M,O,P,Q,T
**Manual:** 10 **0.25% Pb:** No **Spare Parts Only:** No
**Approved:** 18-Apr-2013 **Renewed:** 18-Apr-2016 **Bypass:** Wilkins 950XLD 3/4" (VU)
**Shutoffs:** (qqq),ttt,www,yyy,uuuu,vvvv,xxxx,yyyy,kkkkk,lllll,iiiiii,jjjjjj,llllll,mmmmmm

---

**Type:** DCDA **Manufacturer:** Wilkins **Model:** 350ASTDA
**Size:** 2 1/2 **Orientation:** VU **Meters:** (O), M
**Manual:** 10 **0.25% Pb:** Yes **Spare Parts Only:** No
**Approved:** 18-Feb-2014 **Renewed:** 18-Feb-2017 **Bypass:** Wilkins 950XLD 3/4" (VU)
**Shutoffs:** (qqq),ttt,www,yyy,uuuu,vvvv,xxxx,yyyy,kkkkk,lllll,iiiiii,jjjjjj,llllll,mmmmmm
**Notes:** Lead free compliant version: Starting Serial # 1458B; By-pass Assembly Starting Serial # 3863325 and identified with NSF61 mark on meter

---

**Type:** DCDA **Manufacturer:** Wilkins **Model:** 350ASTDA
**Size:** 3 **Orientation:** H **Meters:** (N),G,H,I,J,K,L,M,O,P,Q,T
**Manual:** 10 **0.25% Pb:** No **Spare Parts Only:** No
**Approved:** 18-Apr-2013 **Renewed:** 18-Apr-2016 **Bypass:** Wilkins 950XLD 3/4" (H)
**Shutoffs:** (qqq),ttt,www,yyy,uuuu,vvvv,xxxx,yyyy,kkkkk,lllll,iiiiii,jjjjjj,llllll,mmmmmm

---

**Type:** DCDA **Manufacturer:** Wilkins **Model:** 350ASTDA
**Size:** 3 **Orientation:** H **Meters:** (O), M
**Manual:** 10 **0.25% Pb:** Yes **Spare Parts Only:** No
**Approved:** 18-Feb-2014 **Renewed:** 18-Feb-2017 **Bypass:** Wilkins 950XLD 3/4" (H)
**Shutoffs:** (qqq),ttt,www,yyy,uuuu,vvvv,xxxx,yyyy,kkkkk,lllll,iiiiii,jjjjjj,llllll,mmmmmm
**Notes:** Lead free compliant version: Starting Serial # 1458B; By-pass Assembly Starting Serial # 3863325 and identified with NSF61 mark on meter


2018 © University of Southern California

**Type:** DCDA **Manufacturer:** Wilkins **Model:** 350ASTDA
**Size:** 3 **Orientation:** VU **Meters:** (N),G,H,I,J,K,L,M,O,P,Q,T
**Manual:** 10 **0.25% Pb:** No **Spare Parts Only:** No
**Approved:** 18-Apr-2013 **Renewed:** 18-Apr-2016 **Bypass:** Wilkins 950XLD 3/4" (VU)
**Shutoffs:** (qqq),ttt,www,yyy,uuuu,vvvv,xxxx,yyyy,kkkkk,lllll,iiiiii,jjjjjj,llllll,mmmmmm

---

**Type:** DCDA **Manufacturer:** Wilkins **Model:** 350ASTDA
**Size:** 3 **Orientation:** VU **Meters:** (O), M
**Manual:** 10 **0.25% Pb:** Yes **Spare Parts Only:** No
**Approved:** 18-Feb-2014 **Renewed:** 18-Feb-2017 **Bypass:** Wilkins 950XLD 3/4" (VU)
**Shutoffs:** (qqq),ttt,www,yyy,uuuu,vvvv,xxxx,yyyy,kkkkk,lllll,iiiiii,jjjjjj,llllll,mmmmmm
**Notes:** Lead free compliant version: Starting Serial # 1458B; By-pass Assembly Starting Serial # 3863325 and identified with NSF61 mark on meter

---

**Type:** DCDA **Manufacturer:** Wilkins **Model:** 350ASTDA
**Size:** 4 **Orientation:** H **Meters:** (N),F,G,H,I,J,K,L,M,O,P,Q,T
**Manual:** 10 **0.25% Pb:** No **Spare Parts Only:** No
**Approved:** 18-Apr-2013 **Renewed:** 18-Apr-2016 **Bypass:** Wilkins 950XLD 3/4" (H)
**Shutoffs:** (qqq),ttt,www,yyy,uuuu,vvvv,xxxx,yyyy,kkkkk,lllll,iiiiii,jjjjjj,llllll,mmmmmm

---

**Type:** DCDA **Manufacturer:** Wilkins **Model:** 350ASTDA
**Size:** 4 **Orientation:** H **Meters:** (O), M
**Manual:** 10 **0.25% Pb:** Yes **Spare Parts Only:** No
**Approved:** 18-Feb-2014 **Renewed:** 18-Feb-2017 **Bypass:** Wilkins 950XLD 3/4" (H)
**Shutoffs:** (qqq),ttt,www,yyy,uuuu,vvvv,xxxx,yyyy,kkkkk,lllll,iiiiii,jjjjjj,llllll,mmmmmm
**Notes:** Lead free compliant version: Starting Serial # 1458B; By-pass Assembly Starting Serial # 3863325 and identified with NSF61 mark on meter

---

**Type:** DCDA **Manufacturer:** Wilkins **Model:** 350ASTDA
**Size:** 4 **Orientation:** VU **Meters:** (N),F,G,H,I,J,K,L,M,O,P,Q,T
**Manual:** 10 **0.25% Pb:** No **Spare Parts Only:** No
**Approved:** 18-Apr-2013 **Renewed:** 18-Apr-2016 **Bypass:** Wilkins 950XLD 3/4" (VU)
**Shutoffs:** (qqq),ttt,www,yyy,uuuu,vvvv,xxxx,yyyy,kkkkk,lllll,iiiiii,jjjjjj,llllll,mmmmmm

---

**Type:** DCDA **Manufacturer:** Wilkins **Model:** 350ASTDA
**Size:** 4 **Orientation:** VU **Meters:** (O), M
**Manual:** 10 **0.25% Pb:** Yes **Spare Parts Only:** No
**Approved:** 18-Feb-2014 **Renewed:** 18-Feb-2017 **Bypass:** Wilkins 950XLD 3/4" (VU)
**Shutoffs:** (qqq),ttt,www,yyy,uuuu,vvvv,xxxx,yyyy,kkkkk,lllll,iiiiii,jjjjjj,llllll,mmmmmm
**Notes:** Lead free compliant version: Starting Serial # 1458B; By-pass Assembly Starting Serial # 3863325 and identified with NSF61 mark on meter

**Type:** DCDA **Manufacturer:** Wilkins **Model:** 350ASTDA
**Size:** 6 **Orientation:** H **Meters:** (N),G,H,I,J,K,L,M,O,P,Q,T
**Manual:** 10 **0.25% Pb:** No **Spare Parts Only:** No
**Approved:** 03-Jul-2013 **Renewed:** 03-Jul-2016 **Bypass:** Wilkins 950XLD 3/4" (H)
**Shutoffs:** (qqq),ttt,www,yyy,uuuu,vvvv,xxxx,yyyy,kkkkk,lllll,iiiiii,jjjjjj,llllll,mmmmmm

---

**Type:** DCDA **Manufacturer:** Wilkins **Model:** 350ASTDA
**Size:** 6 **Orientation:** H **Meters:** (O), M
**Manual:** 10 **0.25% Pb:** Yes **Spare Parts Only:** No
**Approved:** 18-Feb-2014 **Renewed:** 18-Feb-2017 **Bypass:** Wilkins 950XLD 3/4" (H)
**Shutoffs:** (qqq),ttt,www,yyy,uuuu,vvvv,xxxx,yyyy,kkkkk,lllll,iiiiii,jjjjjj,llllll,mmmmmm
**Notes:** Lead free compliant version: Starting Serial # 1458B; By-pass Assembly Starting Serial # 3863325 and identified with NSF61 mark on meter

---

**Type:** DCDA **Manufacturer:** Wilkins **Model:** 350ASTDA
**Size:** 6 **Orientation:** VU **Meters:** (N),G,H,I,J,K,L,M,O,P,Q,T
**Manual:** 10 **0.25% Pb:** No **Spare Parts Only:** No
**Approved:** 03-Jul-2013 **Renewed:** 03-Jul-2016 **Bypass:** Wilkins 950XLD 3/4" (VU)
**Shutoffs:** (qqq),ttt,www,yyy,uuuu,vvvv,xxxx,yyyy,kkkkk,lllll,iiiiii,jjjjjj,llllll,mmmmmm

---

**Type:** DCDA **Manufacturer:** Wilkins **Model:** 350ASTDA
**Size:** 6 **Orientation:** VU **Meters:** (O), M
**Manual:** 10 **0.25% Pb:** Yes **Spare Parts Only:** No
**Approved:** 18-Feb-2014 **Renewed:** 18-Feb-2017 **Bypass:** Wilkins 950XLD 3/4" (VU)
**Shutoffs:** (qqq),ttt,www,yyy,uuuu,vvvv,xxxx,yyyy,kkkkk,lllll,iiiiii,jjjjjj,llllll,mmmmmm
**Notes:** Lead free compliant version: Starting Serial # 1458B; By-pass Assembly Starting Serial # 3863325 and identified with NSF61 mark on meter

---

**Type:** DCDA **Manufacturer:** Wilkins **Model:** 350ASTDA
**Size:** 8 **Orientation:** H **Meters:** (O), M
**Manual:** 10 **0.25% Pb:** Yes **Spare Parts Only:** No
**Approved:** 20-Feb-2014 **Renewed:** 20-Feb-2017 **Bypass:** Wilkins 950XLD 3/4" (H)
**Shutoffs:** (qqq),ttt,www,yyy,uuuu,vvvv,xxxx,yyyy,kkkkk,lllll,iiiiii,jjjjjj,llllll,mmmmmm
**Notes:** Lead free compliant version: By-pass Assembly Starting Serial # 3863325 and identified with NSF61 mark on meter


2018 © University of Southern California

**Type:** DCDA **Manufacturer:** Wilkins **Model:** 350ASTDA
**Size:** 8 **Orientation:** VU **Meters:** (O), M
**Manual:** 10 **0.25% Pb:** Yes **Spare Parts Only:** No
**Approved:** 20-Feb-2014 **Renewed:** 20-Feb-2017 **Bypass:** Wilkins 950XLD 3/4" (VU)
**Shutoffs:** (qqq),ttt,www,yyy,uuuu,vvvv,xxxx,yyyy,kkkkk,lllll,iiiiii,jjjjjj,llllll,mmmmmm
**Notes:** Lead free compliant version: By-pass Assembly Starting Serial # 3863325 and identified with NSF61 mark on meter

---

**Type:** DCDA **Manufacturer:** Wilkins **Model:** 350ASTDA
**Size:** 10 **Orientation:** H **Meters:** (O), M
**Manual:** 10 **0.25% Pb:** Yes **Spare Parts Only:** No
**Approved:** 20-Feb-2014 **Renewed:** 20-Feb-2017 **Bypass:** Wilkins 950XLD 3/4" (H)
**Shutoffs:** (qqq),ttt,www,yyy,uuuu,vvvv,xxxx,yyyy,kkkkk,lllll,iiiiii,jjjjjj,llllll,mmmmmm
**Notes:** Lead free compliant version: By-pass Assembly Starting Serial # 3863325 and identified with NSF61 mark on meter

---

**Type:** DCDA **Manufacturer:** Wilkins **Model:** 350ASTDA
**Size:** 10 **Orientation:** VU **Meters:** (O), M
**Manual:** 10 **0.25% Pb:** Yes **Spare Parts Only:** No
**Approved:** 20-Feb-2014 **Renewed:** 20-Feb-2017 **Bypass:** Wilkins 950XLD 3/4" (VU)
**Shutoffs:** (qqq),ttt,www,yyy,uuuu,vvvv,xxxx,yyyy,kkkkk,lllll,iiiiii,jjjjjj,llllll,mmmmmm
**Notes:** Lead free compliant version: By-pass Assembly Starting Serial # 3863325 and identified with NSF61 mark on meter

---

**Type:** DCDA **Manufacturer:** Wilkins **Model:** 350ASTDAR
**Size:** 2 1/2 **Orientation:** H **Meters:** (O), M
**Manual:** 10 **0.25% Pb:** Yes **Spare Parts Only:** No
**Approved:** 09-Oct-2014 **Renewed:** 09-Oct-2017 **Bypass:** Wilkins 950XLD 3/4" (H)
**Shutoffs:** (yyyy),ttt,www,yyy,uuuu,vvvv,xxxx,kkkkk,lllll,iiiiii,jjjjjj,llllll,mmmmmm
**Notes:** Integral grooved spool between the #2 ck and #2 SOV - assembly length: min. 31" and max. 47 1/8"

---

**Type:** DCDA **Manufacturer:** Wilkins **Model:** 350ASTDAR
**Size:** 2 1/2 **Orientation:** VU **Meters:** (O), M
**Manual:** 10 **0.25% Pb:** Yes **Spare Parts Only:** No
**Approved:** 09-Oct-2014 **Renewed:** 09-Oct-2017 **Bypass:** Wilkins 950XLD 3/4" (VU)
**Shutoffs:** (yyyy),ttt,www,yyy,uuuu,vvvv,xxxx,kkkkk,lllll,iiiiii,jjjjjj,llllll,mmmmmm
**Notes:** Integral grooved spool between the #2 ck and #2 SOV - assembly length: min. 31" and max. 47 1/8"

**Type:** DCDA **Manufacturer:** Wilkins **Model:** 350ASTDAR
**Size:** 3 **Orientation:** H **Meters:** (O), M
**Manual:** 10 **0.25% Pb:** Yes **Spare Parts Only:** No
**Approved:** 09-Oct-2014 **Renewed:** 09-Oct-2017 **Bypass:** Wilkins 950XLD 3/4" (H)
**Shutoffs:** (yyyy),ttt,www,yyy,uuuu,vvvv,xxxx,kkkkk,lllll,iiiiii,jjjjjj,llllll,mmmmmm
**Notes:** Integral grooved spool between the #2 ck and #2 SOV - assembly length: min. 31 1/2" and max. 48 1/8"

---

**Type:** DCDA **Manufacturer:** Wilkins **Model:** 350ASTDAR
**Size:** 3 **Orientation:** VU **Meters:** (O), M
**Manual:** 10 **0.25% Pb:** Yes **Spare Parts Only:** No
**Approved:** 09-Oct-2014 **Renewed:** 09-Oct-2017 **Bypass:** Wilkins 950XLD 3/4" (VU)
**Shutoffs:** (yyyy),ttt,www,yyy,uuuu,vvvv,xxxx,kkkkk,lllll,iiiiii,jjjjjj,llllll,mmmmmm
**Notes:** Integral grooved spool between the #2 ck and #2 SOV - assembly length: min. 31 1/2" and max. 48 1/8"

---

**Type:** DCDA **Manufacturer:** Wilkins **Model:** 350ASTDAR
**Size:** 4 **Orientation:** H **Meters:** (O), M
**Manual:** 10 **0.25% Pb:** Yes **Spare Parts Only:** No
**Approved:** 09-Oct-2014 **Renewed:** 09-Oct-2017 **Bypass:** Wilkins 950XLD 3/4" (H)
**Shutoffs:** (yyyy),ttt,www,yyy,uuuu,vvvv,xxxx,kkkkk,lllll,iiiiii,jjjjjj,llllll,mmmmmm
**Notes:** Integral grooved spool between the #2 ck and #2 SOV - assembly length: min. 32 5/8" and max. 62 1/4"

---

**Type:** DCDA **Manufacturer:** Wilkins **Model:** 350ASTDAR
**Size:** 4 **Orientation:** VU **Meters:** (O), M
**Manual:** 10 **0.25% Pb:** Yes **Spare Parts Only:** No
**Approved:** 09-Oct-2014 **Renewed:** 09-Oct-2017 **Bypass:** Wilkins 950XLD 3/4" (VU)
**Shutoffs:** (yyyy),ttt,www,yyy,uuuu,vvvv,xxxx,kkkkk,lllll,iiiiii,jjjjjj,llllll,mmmmmm
**Notes:** Integral grooved spool between the #2 ck and #2 SOV - assembly length: min. 32 5/8" and max. 62 1/4"

---

**Type:** DCDA **Manufacturer:** Wilkins **Model:** 350ASTDAR
**Size:** 6 **Orientation:** H **Meters:** (O), M
**Manual:** 10 **0.25% Pb:** Yes **Spare Parts Only:** No
**Approved:** 18-Sep-2014 **Renewed:** 18-Sep-2017 **Bypass:** Wilkins 950XLD 3/4" (H)
**Shutoffs:** (yyyy),ttt,www,yyy,uuuu,vvvv,xxxx,kkkkk,lllll,iiiiii,jjjjjj,llllll,mmmmmm
**Notes:** Integral grooved spool between the #2 ck and #2 SOV - assembly length: min. 39" and max. 71 1/4"

---

**Type:** DCDA **Manufacturer:** Wilkins **Model:** 350ASTDAR
**Size:** 6 **Orientation:** VU **Meters:** (O), M
**Manual:** 10 **0.25% Pb:** Yes **Spare Parts Only:** No
**Approved:** 18-Sep-2014 **Renewed:** 18-Sep-2017 **Bypass:** Wilkins 950XLD 3/4" (VU)
**Shutoffs:** (yyyy),ttt,www,yyy,uuuu,vvvv,xxxx,kkkkk,lllll,iiiiii,jjjjjj,llllll,mmmmmm
**Notes:** Integral grooved spool between the #2 ck and #2 SOV - assembly length: min. 39" and max. 71 1/4"


2018 © University of Southern California

**Type:** DCDA **Manufacturer:** Wilkins **Model:** 350ASTDAR
**Size:** 8 **Orientation:** H **Meters:** (O), M
**Manual:** 10 **0.25% Pb:** Yes **Spare Parts Only:** No
**Approved:** 18-Sep-2014 **Renewed:** 18-Sep-2017 **Bypass:** Wilkins 950XLD 3/4" (H)
**Shutoffs:** (yyyy),ttt,www,yyy,uuuu,vvvv,xxxx,kkkkk,lllll,iiiiii,jjjjjj,llllll,mmmmmm
**Notes:** Integral grooved spool between the #2 ck and #2 SOV - assembly length: min. 48 3/4" and max. 86"

---

**Type:** DCDA **Manufacturer:** Wilkins **Model:** 350ASTDAR
**Size:** 8 **Orientation:** VU **Meters:** (O), M
**Manual:** 10 **0.25% Pb:** Yes **Spare Parts Only:** No
**Approved:** 18-Sep-2014 **Renewed:** 18-Sep-2017 **Bypass:** Wilkins 950XLD 3/4" (VU)
**Shutoffs:** (yyyy),ttt,www,yyy,uuuu,vvvv,xxxx,kkkkk,lllll,iiiiii,jjjjjj,llllll,mmmmmm
**Notes:** Integral grooved spool between the #2 ck and #2 SOV - assembly length: min. 48 3/4" and max. 86"

---

**Type:** DCDA **Manufacturer:** Wilkins **Model:** 350ASTDAR
**Size:** 10 **Orientation:** H **Meters:** (O), M
**Manual:** 10 **0.25% Pb:** Yes **Spare Parts Only:** No
**Approved:** 18-Sep-2014 **Renewed:** 18-Sep-2017 **Bypass:** Wilkins 950XLD 3/4" (H)
**Shutoffs:** (yyyy),ttt,www,yyy,uuuu,vvvv,xxxx,kkkkk,lllll,iiiiii,jjjjjj,llllll,mmmmmm
**Notes:** Integral grooved spool between the #2 ck and #2 SOV - assembly length: min. 52 5/8" and max. 100 5/8"

---

**Type:** DCDA **Manufacturer:** Wilkins **Model:** 350ASTDAR
**Size:** 10 **Orientation:** VU **Meters:** (O), M
**Manual:** 10 **0.25% Pb:** Yes **Spare Parts Only:** No
**Approved:** 18-Sep-2014 **Renewed:** 18-Sep-2017 **Bypass:** Wilkins 950XLD 3/4" (VU)
**Shutoffs:** (yyyy),ttt,www,yyy,uuuu,vvvv,xxxx,kkkkk,lllll,iiiiii,jjjjjj,llllll,mmmmmm
**Notes:** Integral grooved spool between the #2 ck and #2 SOV - assembly length: min. 52 5/8" and max. 100 5/8"

---

**Type:** DCDA **Manufacturer:** Wilkins **Model:** 350DA
**Size:** 2 1/2 **Orientation:** H **Meters:** (M),A,B,C,D,E,F,G,H,I,J,K,L,N,O,P,Q,T
**Manual:** 9 **0.25% Pb:** No **Spare Parts Only:** No
**Approved:** 03-Apr-2002 **Renewed:** 03-Apr-2017 **Bypass:** Wilkins 950XLD 3/4" (H)
**Shutoffs:** (hh),ff,mm,uu,zz,vvvv,wwww,yyyy,zzzz,kkkkk,jjjjjj,kkkkkk,mmmmmm,nnnnnn
**Notes:** Up to Serial # N4230

**Type:** DCDA | **Manufacturer:** Wilkins | **Model:** 350DA
**Size:** 2 1/2 | **Orientation:** H | **Meters:** (O), M
**Manual:** 9 | **0.25% Pb:** Yes | **Spare Parts Only:** No
**Approved:** 18-Feb-2014 | **Renewed:** 18-Feb-2017 | **Bypass:** Wilkins 950XLD 3/4" (H)
**Shutoffs:** (hh),qqq,vvv,www,yyyy,zzzz,kkkkk,mmmmmm,nnnnnn
**Notes:** Lead free compliant version: Starting Serial # N4231; By-pass Assembly Starting Serial # 3863325 and identified with NSF61 mark on meter

---

**Type:** DCDA | **Manufacturer:** Wilkins | **Model:** 350DA
**Size:** 2 1/2 | **Orientation:** VU | **Meters:** (M),A,B,C,D,E,F,G,H,I,J,K,L,N,O,P,Q,T
**Manual:** 9 | **0.25% Pb:** No | **Spare Parts Only:** No
**Approved:** 08-Oct-2002 | **Renewed:** 08-Oct-2017 | **Bypass:** Wilkins 950XLD 3/4" (VU)
**Shutoffs:** (hh),ff,mm,uu,zz,vvvv,wwww,yyyy,zzzz,kkkkk,jjjjjj,kkkkkk,mmmmmm,nnnnnn
**Notes:** Up to Serial # N4230

---

**Type:** DCDA | **Manufacturer:** Wilkins | **Model:** 350DA
**Size:** 2 1/2 | **Orientation:** VU | **Meters:** (O), M
**Manual:** 9 | **0.25% Pb:** Yes | **Spare Parts Only:** No
**Approved:** 18-Feb-2014 | **Renewed:** 18-Feb-2017 | **Bypass:** Wilkins 950XLD 3/4" (VU)
**Shutoffs:** (hh),qqq,vvv,www,yyyy,zzzz,kkkkk,mmmmmm,nnnnnn
**Notes:** Lead free compliant version: Starting Serial # N4231; By-pass Assembly Starting Serial # 3863325 and identified with NSF61 mark on meter

---

**Type:** DCDA | **Manufacturer:** Wilkins | **Model:** 350DA
**Size:** 3 | **Orientation:** H | **Meters:** (M),A,B,C,D,E,F,G,H,I,J,K,L,N,O,P,Q,T
**Manual:** 9 | **0.25% Pb:** No | **Spare Parts Only:** No
**Approved:** 03-Apr-2002 | **Renewed:** 03-Apr-2017 | **Bypass:** Wilkins 950XLD 3/4" (H)
**Shutoffs:** (hh),ff,mm,uu,zz,vvvv,wwww,yyyy,zzzz,kkkkk,jjjjjj,kkkkkk,mmmmmm,nnnnnn
**Notes:** Up to Serial # N4230

---

**Type:** DCDA | **Manufacturer:** Wilkins | **Model:** 350DA
**Size:** 3 | **Orientation:** H | **Meters:** (M),A,B,C,D,E,F,G,H,I,J,K,L,N,O,P,Q,T
**Manual:** 9 | **0.25% Pb:** Yes | **Spare Parts Only:** No
**Approved:** 03-Apr-2002 | **Renewed:** 03-Apr-2017 | **Bypass:** Wilkins 950XLD 3/4" (H)
**Shutoffs:** (hh),ff,mm,uu,zz,vvvv,wwww,yyyy,zzzz,kkkkk,jjjjjj,kkkkkk,mmmmmm,nnnnnn
**Notes:** Starting Serial # N4231; By-pass Assembly Starting Serial # 3863325 and Lead free compliant version identified with NSF61 mark on meter


2018 © University of Southern California

**Type:** DCDA **Manufacturer:** Wilkins **Model:** 350DA
**Size:** 3 **Orientation:** H **Meters:** (O), M
**Manual:** 9 **0.25% Pb:** Yes **Spare Parts Only:** No
**Approved:** 18-Feb-2014 **Renewed:** 18-Feb-2017 **Bypass:** Wilkins 950XLD 3/4" (H)
**Shutoffs:** (hh),qqq,vvv,www,yyyy,zzzz,mmmmmm,nnnnnn
**Notes:** Lead free compliant version: Starting Serial # N4231; By-pass Assembly Starting Serial # 3863325 and identified with NSF61 mark on meter

---

**Type:** DCDA **Manufacturer:** Wilkins **Model:** 350DA
**Size:** 3 **Orientation:** VU **Meters:** (M),A,B,C,D,E,F,G,H,I,J,K,L,N,O,P,Q,T
**Manual:** 9 **0.25% Pb:** No **Spare Parts Only:** No
**Approved:** 08-Oct-2002 **Renewed:** 08-Oct-2017 **Bypass:** Wilkins 950XLD 3/4" (VU)
**Shutoffs:** (hh),ff,mm,uu,zz,vvvv,wwww,yyyy,zzzz,kkkkk,jjjjjj,kkkkkk,mmmmmm,nnnnnn
**Notes:** Up to Serial # N4230

---

**Type:** DCDA **Manufacturer:** Wilkins **Model:** 350DA
**Size:** 3 **Orientation:** VU **Meters:** (M),A,B,C,D,E,F,G,H,I,J,K,L,N,O,P,Q,T
**Manual:** 9 **0.25% Pb:** Yes **Spare Parts Only:** No
**Approved:** 08-Oct-2002 **Renewed:** 08-Oct-2017 **Bypass:** Wilkins 950XLD 3/4" (VU)
**Shutoffs:** (hh),ff,mm,uu,zz,vvvv,wwww,yyyy,zzzz,kkkkk,jjjjjj,kkkkkk,mmmmmm,nnnnnn
**Notes:** Starting Serial # N4231; By-pass Assembly Starting Serial # 3863325 and Lead free compliant version identified with NSF61 mark on meter

---

**Type:** DCDA **Manufacturer:** Wilkins **Model:** 350DA
**Size:** 3 **Orientation:** VU **Meters:** (O), M
**Manual:** 9 **0.25% Pb:** Yes **Spare Parts Only:** No
**Approved:** 18-Feb-2014 **Renewed:** 18-Feb-2017 **Bypass:** Wilkins 950XLD 3/4" (VU)
**Shutoffs:** (hh),qqq,vvv,www,yyyy,zzzz,mmmmmm,nnnnnn
**Notes:** Lead free compliant version: Starting Serial # N4231; By-pass Assembly Starting Serial # 3863325 and identified with NSF61 mark on meter

---

**Type:** DCDA **Manufacturer:** Wilkins **Model:** 350DA
**Size:** 4 **Orientation:** H **Meters:** (M),A,B,C,D,E,F,G,H,I,J,K,L,N,O,P,Q,T
**Manual:** 9 **0.25% Pb:** No **Spare Parts Only:** No
**Approved:** 15-Sep-1999 **Renewed:** 15-Sep-2017 **Bypass:** Wilkins 950XLD 3/4" (H)
**Shutoffs:** (hh),ff,mm,uu,zz,qqq,vvv,www,zzz,eeee,vvvv,wwww,yyyy,zzzz,kkkkk,jjjjjj,kkkkkk,mmmmmm,nnnnnn
**Notes:** Up to Serial # N4230

**Type:** DCDA | **Manufacturer:** Wilkins | **Model:** 350DA
**Size:** 4 | **Orientation:** H | **Meters:** (M),A,B,C,D,E,F,G,H,I,J,K,L,N,O,P,Q,T
**Manual:** 9 | **0.25% Pb:** Yes | **Spare Parts Only:** No
**Approved:** 15-Sep-1999 | **Renewed:** 15-Sep-2017 | **Bypass:** Wilkins 950XLD 3/4" (H)
**Shutoffs:** (hh),ff,mm,uu,zz,qqq,vvv,www,zzz,eeee,vvvv,wwww,yyyy,zzzz,kkkkk,jjjjjj,kkkkkk,mmmmmm,nnnnnn
**Notes:** Starting Serial # N4231; By-pass Assembly Starting Serial # 3863325 and Lead free compliant version identified with NSF61 mark on meter

---

**Type:** DCDA | **Manufacturer:** Wilkins | **Model:** 350DA
**Size:** 4 | **Orientation:** H | **Meters:** (O), M
**Manual:** 9 | **0.25% Pb:** Yes | **Spare Parts Only:** No
**Approved:** 18-Feb-2014 | **Renewed:** 18-Feb-2017 | **Bypass:** Wilkins 950XLD 3/4" (H)
**Shutoffs:** (hh),qqq,vvv,www,yyyy,zzzz,mmmmmm,nnnnnn
**Notes:** Lead free compliant version: Starting Serial # N4231; By-pass Assembly Starting Serial # 3863325 and identified with NSF61 mark on meter

---

**Type:** DCDA | **Manufacturer:** Wilkins | **Model:** 350DA
**Size:** 4 | **Orientation:** VU | **Meters:** (M),A,B,C,D,E,F,G,H,I,J,K,L,N,O,P,Q,T
**Manual:** 9 | **0.25% Pb:** No | **Spare Parts Only:** No
**Approved:** 09-Sep-2000 | **Renewed:** 09-Sep-2018 | **Bypass:** Wilkins 950XLD 3/4" (VU)
**Shutoffs:** (hh),ff,mm,uu,zz,qqq,vvv,www,zzz,eeee,vvvv,wwww,yyyy,zzzz,kkkkk,jjjjjj,kkkkkk,mmmmmm,nnnnnn
**Notes:** Up to Serial # N4230

---

**Type:** DCDA | **Manufacturer:** Wilkins | **Model:** 350DA
**Size:** 4 | **Orientation:** VU | **Meters:** (M),A,B,C,D,E,F,G,H,I,J,K,L,N,O,P,Q,T
**Manual:** 9 | **0.25% Pb:** Yes | **Spare Parts Only:** No
**Approved:** 09-Sep-2000 | **Renewed:** 09-Sep-2018 | **Bypass:** Wilkins 950XLD 3/4" (VU)
**Shutoffs:** (hh),ff,mm,uu,zz,qqq,vvv,www,zzz,eeee,vvvv,wwww,yyyy,zzzz,kkkkk,jjjjjj,kkkkkk,mmmmmm,nnnnnn
**Notes:** Starting Serial # N4231; By-pass Assembly Starting Serial # 3863325 and Lead free compliant version identified with NSF61 mark on meter

---

**Type:** DCDA | **Manufacturer:** Wilkins | **Model:** 350DA
**Size:** 4 | **Orientation:** VU | **Meters:** (O), M
**Manual:** 9 | **0.25% Pb:** Yes | **Spare Parts Only:** No
**Approved:** 18-Feb-2014 | **Renewed:** 18-Feb-2017 | **Bypass:** Wilkins 950XLD 3/4" (VU)
**Shutoffs:** (hh),qqq,vvv,www,yyyy,zzzz,mmmmmm,nnnnnn
**Notes:** Lead free compliant version: Starting Serial # N4231; By-pass Assembly Starting Serial # 3863325 and identified with NSF61 mark on meter


2018 © University of Southern California

**Type:** DCDA | **Manufacturer:** Wilkins | **Model:** 350DA
**Size:** 6 | **Orientation:** H | **Meters:** (M),A,B,C,D,E,F,G,H,I,J,K,L,N,O,P,Q,T
**Manual:** 9 | **0.25% Pb:** No | **Spare Parts Only:** No
**Approved:** 18-Oct-1999 | **Renewed:** 18-Oct-2017 | **Bypass:** Wilkins 950XLD 3/4" (H)
**Shutoffs:** (hh),ff,mm,uu,zz,qqq,vvv,www,zzz,eeee,vvvv,wwww,yyyy,zzzz,kkkkk,jjjjjj,kkkkkk,mmmmmm,nnnnnn
**Notes:** Up to Serial # N4230

---

**Type:** DCDA | **Manufacturer:** Wilkins | **Model:** 350DA
**Size:** 6 | **Orientation:** H | **Meters:** (M),A,B,C,D,E,F,G,H,I,J,K,L,N,O,P,Q,T
**Manual:** 9 | **0.25% Pb:** Yes | **Spare Parts Only:** No
**Approved:** 18-Oct-1999 | **Renewed:** 18-Oct-2017 | **Bypass:** Wilkins 950XLD 3/4" (H)
**Shutoffs:** (hh),ff,mm,uu,zz,qqq,vvv,www,zzz,eeee,vvvv,wwww,yyyy,zzzz,kkkkk,jjjjjj,kkkkkk,mmmmmm,nnnnnn
**Notes:** Starting Serial # N4231; By-pass Assembly Starting Serial # 3863325 and Lead free compliant version identified with NSF61 mark on meter

---

**Type:** DCDA | **Manufacturer:** Wilkins | **Model:** 350DA
**Size:** 6 | **Orientation:** H | **Meters:** (O), M
**Manual:** 9 | **0.25% Pb:** Yes | **Spare Parts Only:** No
**Approved:** 18-Feb-2014 | **Renewed:** 18-Feb-2017 | **Bypass:** Wilkins 950XLD 3/4" (H)
**Shutoffs:** (hh),qqq,vvv,www,yyyy,zzzz,mmmmmm,nnnnnn
**Notes:** Lead free compliant version: Starting Serial # N4231; By-pass Assembly Starting Serial # 3863325 and identified with NSF61 mark on meter

---

**Type:** DCDA | **Manufacturer:** Wilkins | **Model:** 350DA
**Size:** 6 | **Orientation:** VU | **Meters:** (M),A,B,C,D,E,F,G,H,I,J,K,L,N,O,P,Q,T
**Manual:** 9 | **0.25% Pb:** No | **Spare Parts Only:** No
**Approved:** 05-Jan-2000 | **Renewed:** 05-Jan-2017 | **Bypass:** Wilkins 950XLD 3/4" (VU)
**Shutoffs:** (hh),ff,mm,uu,zz,qqq,vvv,www,zzz,eeee,vvvv,wwww,yyyy,zzzz,kkkkk,jjjjjj,kkkkkk,mmmmmm,nnnnnn
**Notes:** Up to Serial # N4230

---

**Type:** DCDA | **Manufacturer:** Wilkins | **Model:** 350DA
**Size:** 6 | **Orientation:** VU | **Meters:** (M),A,B,C,D,E,F,G,H,I,J,K,L,N,O,P,Q,T
**Manual:** 9 | **0.25% Pb:** Yes | **Spare Parts Only:** No
**Approved:** 05-Jan-2000 | **Renewed:** 05-Jan-2017 | **Bypass:** Wilkins 950XLD 3/4" (VU)
**Shutoffs:** (hh),ff,mm,uu,zz,qqq,vvv,www,zzz,eeee,vvvv,wwww,yyyy,zzzz,kkkkk,jjjjjj,kkkkkk,mmmmmm,nnnnnn
**Notes:** Starting Serial # N4231; By-pass Assembly Starting Serial # 3863325 and Lead free compliant version identified with NSF61 mark on meter

**Type:** DCDA **Manufacturer:** Wilkins **Model:** 350DA
**Size:** 6 **Orientation:** VU **Meters:** (O), M
**Manual:** 9 **0.25% Pb:** Yes **Spare Parts Only:** No
**Approved:** 18-Feb-2014 **Renewed:** 18-Feb-2017 **Bypass:** Wilkins 950XLD 3/4" (VU)
**Shutoffs:** (hh),qqq,vvv,www,yyyy,zzzz,mmmmmm,nnnnnn
**Notes:** Lead free compliant version: Starting Serial # N4231; By-pass Assembly Starting Serial # 3863325 and identified with NSF61 mark on meter

---

**Type:** DCDA **Manufacturer:** Wilkins **Model:** 350DA
**Size:** 8 **Orientation:** H **Meters:** (N),F,G,H,I,J,K,L,M,O,P,Q,T
**Manual:** 9 **0.25% Pb:** No **Spare Parts Only:** No
**Approved:** 03-Jul-2002 **Renewed:** 03-Jul-2017 **Bypass:** Wilkins 950XLD 3/4" (H)
**Shutoffs:** (hh),ff,mm,uu,zz,qqq,vvv,www,zzz,eeee,vvvv,wwww,yyyy,zzzz,kkkkk,jjjjjj,kkkkkk,mmmmmm,nnnnnn
**Notes:** Up to Serial # N4230

---

**Type:** DCDA **Manufacturer:** Wilkins **Model:** 350DA
**Size:** 8 **Orientation:** H **Meters:** (N),F,G,H,I,J,K,L,M,O,P,Q,T
**Manual:** 9 **0.25% Pb:** Yes **Spare Parts Only:** No
**Approved:** 03-Jul-2002 **Renewed:** 03-Jul-2017 **Bypass:** Wilkins 950XLD 3/4" (H)
**Shutoffs:** (hh),ff,mm,uu,zz,qqq,vvv,www,zzz,eeee,vvvv,wwww,yyyy,zzzz,kkkkk,jjjjjj,kkkkkk,mmmmmm,nnnnnn
**Notes:** Starting Serial # N4231; By-pass Assembly Starting Serial # 3863325 and Lead free compliant version identified with NSF61 mark on meter

---

**Type:** DCDA **Manufacturer:** Wilkins **Model:** 350DA
**Size:** 8 **Orientation:** H **Meters:** (O), M
**Manual:** 9 **0.25% Pb:** Yes **Spare Parts Only:** No
**Approved:** 18-Feb-2014 **Renewed:** 18-Feb-2017 **Bypass:** Wilkins 950XLD 3/4" (H)
**Shutoffs:** (hh),qqq,vvv,www,yyyy,zzzz,mmmmmm,nnnnnn
**Notes:** Lead free compliant version: Starting Serial # N4231; By-pass Assembly Starting Serial # 3863325 and identified with NSF61 mark on meter

---

**Type:** DCDA **Manufacturer:** Wilkins **Model:** 350DA
**Size:** 8 **Orientation:** VU **Meters:** (N),F,G,H,I,J,K,L,M,O,P,Q,T
**Manual:** 9 **0.25% Pb:** No **Spare Parts Only:** No
**Approved:** 16-Jan-2003 **Renewed:** 16-Jan-2018 **Bypass:** Wilkins 950XLD 3/4" (VU)
**Shutoffs:** (hh),ff,mm,uu,zz,qqq,vvv,www,zzz,eeee,vvvv,wwww,yyyy,zzzz,kkkkk,jjjjjj,kkkkkk,mmmmmm,nnnnnn
**Notes:** Up to Serial # N4230


2018 © University of Southern California

**Type:** DCDA **Manufacturer:** Wilkins **Model:** 350DA
**Size:** 8 **Orientation:** VU **Meters:** (N),F,G,H,I,J,K,L,M,O,P,Q,T
**Manual:** 9 **0.25% Pb:** Yes **Spare Parts Only:** No
**Approved:** 16-Jan-2003 **Renewed:** 16-Jan-2018 **Bypass:** Wilkins 950XLD 3/4" (VU)
**Shutoffs:** (hh),ff,mm,uu,zz,qqq,vvv,www,zzz,eeee,vvvv,wwww,yyyy,zzzz,kkkkk,jjjjjj,kkkkkk,mmmmmm,nnnnnn
**Notes:** Starting Serial # N4231; By-pass Assembly Starting Serial # 3863325 and Lead free compliant version identified with NSF61 mark on meter

---

**Type:** DCDA **Manufacturer:** Wilkins **Model:** 350DA
**Size:** 8 **Orientation:** VU **Meters:** (O), M
**Manual:** 9 **0.25% Pb:** Yes **Spare Parts Only:** No
**Approved:** 18-Feb-2014 **Renewed:** 18-Feb-2017 **Bypass:** Wilkins 950XLD 3/4" (VU)
**Shutoffs:** (hh),qqq,vvv,www,yyyy,zzzz,mmmmmm,nnnnnn
**Notes:** Lead free compliant version: Starting Serial # N4231; By-pass Assembly Starting Serial # 3863325 and identified with NSF61 mark on meter

---

**Type:** DCDA **Manufacturer:** Wilkins **Model:** 350DA
**Size:** 10 **Orientation:** H **Meters:** (N),F,G,H,I,J,K,L,M,O,P,Q,T
**Manual:** 9 **0.25% Pb:** No **Spare Parts Only:** No
**Approved:** 28-Aug-2002 **Renewed:** 28-Aug-2017 **Bypass:** Wilkins 950XLD 3/4" (H)
**Shutoffs:** (hh),ff,mm,uu,zz,qqq,vvv,www,zzz,eeee,vvvv,wwww,yyyy,zzzz,kkkkk,jjjjjj,kkkkkk,mmmmmm,nnnnnn
**Notes:** Up to Serial # N4230

---

**Type:** DCDA **Manufacturer:** Wilkins **Model:** 350DA
**Size:** 10 **Orientation:** H **Meters:** (N),F,G,H,I,J,K,L,M,O,P,Q,T
**Manual:** 9 **0.25% Pb:** Yes **Spare Parts Only:** No
**Approved:** 28-Aug-2002 **Renewed:** 28-Aug-2017 **Bypass:** Wilkins 950XLD 3/4" (H)
**Shutoffs:** (hh),ff,mm,uu,zz,qqq,vvv,www,zzz,eeee,vvvv,wwww,yyyy,zzzz,kkkkk,jjjjjj,kkkkkk,mmmmmm,nnnnnn
**Notes:** Starting Serial # N4231; By-pass Assembly Starting Serial # 3863325 and Lead free compliant version identified with NSF61 mark on meter

---

**Type:** DCDA **Manufacturer:** Wilkins **Model:** 350DA
**Size:** 10 **Orientation:** H **Meters:** (O), M
**Manual:** 9 **0.25% Pb:** Yes **Spare Parts Only:** No
**Approved:** 18-Feb-2014 **Renewed:** 18-Feb-2017 **Bypass:** Wilkins 950XLD 3/4" (H)
**Shutoffs:** (hh),qqq,vvv,www,yyyy,zzzz,mmmmmm,nnnnnn
**Notes:** Lead free compliant version: Starting Serial # N4231; By-pass Assembly Starting Serial # 3863325 and identified with NSF61 mark on meter

**Type:** DCDA **Manufacturer:** Wilkins **Model:** 350DA
**Size:** 10 **Orientation:** VU **Meters:** (N),F,G,H,I,J,K,L,M,O,P,Q,T
**Manual:** 9 **0.25% Pb:** No **Spare Parts Only:** No
**Approved:** 14-Mar-2003 **Renewed:** 14-Mar-2018 **Bypass:** Wilkins 950XLD 3/4" (VU)
**Shutoffs:** (hh),ff,mm,uu,zz,qqq,vvv,www,zzz,eeee,vvvv,wwww,yyyy,zzzz,kkkkk,jjjjjj,kkkkkk,mmmmmm,nnnnnn
**Notes:** Up to Serial # N4230

---

**Type:** DCDA **Manufacturer:** Wilkins **Model:** 350DA
**Size:** 10 **Orientation:** VU **Meters:** (N),F,G,H,I,J,K,L,M,O,P,Q,T
**Manual:** 9 **0.25% Pb:** Yes **Spare Parts Only:** No
**Approved:** 14-Mar-2003 **Renewed:** 14-Mar-2018 **Bypass:** Wilkins 950XLD 3/4" (VU)
**Shutoffs:** (hh),ff,mm,uu,zz,qqq,vvv,www,zzz,eeee,vvvv,wwww,yyyy,zzzz,kkkkk,jjjjjj,kkkkkk,mmmmmm,nnnnnn
**Notes:** Starting Serial # N4231; By-pass Assembly Starting Serial # 3863325 and Lead free compliant version identified with NSF61 mark on meter

---

**Type:** DCDA **Manufacturer:** Wilkins **Model:** 350DA
**Size:** 10 **Orientation:** VU **Meters:** (O), M
**Manual:** 9 **0.25% Pb:** Yes **Spare Parts Only:** No
**Approved:** 18-Feb-2014 **Renewed:** 18-Feb-2017 **Bypass:** Wilkins 950XLD 3/4" (VU)
**Shutoffs:** (hh),qqq,vvv,www,yyyy,zzzz,mmmmmm,nnnnnn
**Notes:** Lead free compliant version: Starting Serial # N4231; By-pass Assembly Starting Serial # 3863325 and identified with NSF61 mark on meter

---

**Type:** DCDA **Manufacturer:** Wilkins **Model:** 350DA
**Size:** 12 **Orientation:** H **Meters:** (N),F,G,H,I,J,K,L,M,O,P,Q,T
**Manual:** 9 **0.25% Pb:** No **Spare Parts Only:** No
**Approved:** 20-Oct-2009 **Renewed:** 20-Oct-2018 **Bypass:** Wilkins 950XLD 3/4" (H)
**Shutoffs:** (hh),vvvv,wwww,yyyy,zzzz,kkkkk,jjjjjj,kkkkkk,mmmmmm,nnnnnn
**Notes:** Up to Serial # N4230

---

**Type:** DCDA **Manufacturer:** Wilkins **Model:** 350DA
**Size:** 12 **Orientation:** H **Meters:** (N),F,G,H,I,J,K,L,M,O,P,Q,T
**Manual:** 9 **0.25% Pb:** Yes **Spare Parts Only:** No
**Approved:** 20-Oct-2009 **Renewed:** 20-Oct-2018 **Bypass:** Wilkins 950XLD 3/4" (H)
**Shutoffs:** (hh),ssss,tttt,vvvv,wwww,yyyy,zzzz,jjjjjj,kkkkkk,mmmmmm,nnnnnn
**Notes:** Starting Serial # N4231; By-pass Assembly Starting Serial # 3863325 and Lead free compliant version identified with NSF61 mark on meter


2018 © University of Southern California

**Type:** DCDA | **Manufacturer:** Wilkins | **Model:** 350DA
**Size:** 12 | **Orientation:** H | **Meters:** (O)
**Manual:** 9 | **0.25% Pb:** Yes | **Spare Parts Only:** No
**Approved:** 18-Feb-2014 | **Renewed:** 18-Feb-2017 | **Bypass:** Wilkins 950XLD 3/4" (H)
**Shutoffs:** (hh),vvvv,wwww,yyyy,zzzz,kkkkk,jjjjjj,kkkkkk,mmmmmm,nnnnnn
**Notes:** Lead free compliant version: Starting Serial # N4231; By-pass Assembly Starting Serial # 3863325 and identified with NSF61 mark on meter

---

**Type:** DCDA | **Manufacturer:** Wilkins | **Model:** 450DA
**Size:** 4 | **Orientation:** VUVD | **Meters:** (M),A,B,C,D,E,F,G,H,I,J,K,L,N,O,P,Q,T
**Manual:** 9 | **0.25% Pb:** No | **Spare Parts Only:** No
**Approved:** 12-Apr-2000 | **Renewed:** 12-Apr-2018 | **Bypass:** Wilkins 950XLD 3/4" (H)
**Shutoffs:** (qqq),ttt,www,yyy,zzz,eeee,uuuu,vvvv,xxxx,yyyy,kkkkk,lllll,iiiiii,jjjjjj,llllll,mmmmmm

---

**Type:** DCDA | **Manufacturer:** Wilkins | **Model:** 450DA
**Size:** 4 | **Orientation:** VUVD | **Meters:** (O), M
**Manual:** 9 | **0.25% Pb:** Yes | **Spare Parts Only:** No
**Approved:** 18-Feb-2014 | **Renewed:** 18-Feb-2017 | **Bypass:** Wilkins 950XLD 3/4" (H)
**Shutoffs:** (hh),qqq,vvv,www,yyyy,zzzz,mmmmmm,nnnnnn
**Notes:** Lead free compliant version: Starting Serial # P07372; By-pass Assembly Starting Serial # 3863325 and identified with NSF61 mark on meter

---

**Type:** DCDA | **Manufacturer:** Wilkins | **Model:** 450DA
**Size:** 6 | **Orientation:** VUVD | **Meters:** (M),C,D,E,F,G,H,I,J,K,L,N,O,P,Q,T
**Manual:** 9 | **0.25% Pb:** No | **Spare Parts Only:** No
**Approved:** 24-May-2000 | **Renewed:** 24-May-2018 | **Bypass:** Wilkins 950XLD 3/4" (H)
**Shutoffs:** (qqq),ttt,www,yyy,zzz,eeee,uuuu,vvvv,xxxx,yyyy,kkkkk,lllll,iiiiii,jjjjjj,llllll,mmmmmm

---

**Type:** DCDA | **Manufacturer:** Wilkins | **Model:** 450DA
**Size:** 6 | **Orientation:** VUVD | **Meters:** (O), M
**Manual:** 9 | **0.25% Pb:** Yes | **Spare Parts Only:** No
**Approved:** 18-Feb-2014 | **Renewed:** 18-Feb-2017 | **Bypass:** Wilkins 950XLD 3/4" (H)
**Shutoffs:** (hh),qqq,vvv,www,yyyy,zzzz,mmmmmm,nnnnnn
**Notes:** Lead free compliant version: Starting Serial # P07372; By-pass Assembly Starting Serial # 3863325 and identified with NSF61 mark on meter

**Type:** DCDA
**Manufacturer:** Wilkins
**Model:** 450DA
**Size:** 8
**Orientation:** VUVD
**Meters:** (N),F,G,H,I,J,K,L,M,O,P,Q,T
**Manual:** 9
**0.25% Pb:** No
**Spare Parts Only:** No
**Approved:** 03-Aug-2004
**Renewed:** 03-Aug-2016
**Bypass:** Wilkins 950XLD 3/4" (H)
**Shutoffs:** (qqq),ttt,www,yyy,zzz,eeee,uuuu,vvvv,xxxx,yyyy,kkkkk,lllll,iiiiii,jjjjjj,llllll,mmmmmm

---

**Type:** DCDA
**Manufacturer:** Wilkins
**Model:** 450DA
**Size:** 8
**Orientation:** VUVD
**Meters:** (O), M
**Manual:** 9
**0.25% Pb:** Yes
**Spare Parts Only:** No
**Approved:** 18-Feb-2014
**Renewed:** 18-Feb-2017
**Bypass:** Wilkins 950XLD 3/4" (H)
**Shutoffs:** (hh),qqq,vvv,www,yyyy,zzzz,mmmmmm,nnnnnn
**Notes:** Lead free compliant version: Starting Serial # P07372; By-pass Assembly Starting Serial # 3863325 and identified with NSF61 mark on meter

---

**Type:** DCDA
**Manufacturer:** Wilkins
**Model:** 450DA
**Size:** 10
**Orientation:** VUVD
**Meters:** (N),F,G,H,I,J,K,L,M,O,P,Q,T
**Manual:** 9
**0.25% Pb:** No
**Spare Parts Only:** No
**Approved:** 03-Aug-2004
**Renewed:** 03-Aug-2016
**Bypass:** Wilkins 950XLD 3/4" (H)
**Shutoffs:** (qqq),ttt,www,yyy,zzz,eeee,uuuu,vvvv,xxxx,yyyy,kkkkk,lllll

---

**Type:** DCDA
**Manufacturer:** Wilkins
**Model:** 450DA
**Size:** 10
**Orientation:** VUVD
**Meters:** (O), M
**Manual:** 9
**0.25% Pb:** Yes
**Spare Parts Only:** No
**Approved:** 18-Feb-2014
**Renewed:** 18-Feb-2017
**Bypass:** Wilkins 950XLD 3/4" (H)
**Shutoffs:** (hh),qqq,vvv,www,yyyy,zzzz,mmmmmm,nnnnnn
**Notes:** Lead free compliant version: Starting Serial # P07372; By-pass Assembly Starting Serial # 3863325 and identified with NSF61 mark on meter

---

**Type:** DCDA
**Manufacturer:** Wilkins
**Model:** 950DA
**Size:** 2 1/2
**Orientation:** H
**Meters:** (M),A,B,C,D,E,F,G,H,I,J,K,L,N,O,P,Q,T
**Manual:** 8
**0.25% Pb:** No
**Spare Parts Only:** Yes
**Approved:** 02-Jan-1994
**Renewed:** 02-Jan-2017
**Bypass:** Wilkins 950XL 3/4" (H), Wilkins 950 3/4" (H)
**Shutoffs:** (hh),ff,mm,uu,zz,vvvv,wwww,yyyy,zzzz

---


2018 © University of Southern California

**Type:** DCDA
**Manufacturer:** Wilkins
**Model:** 950DA
**Size:** 2 1/2
**Orientation:** VU
**Meters:** (M),D,E,F,G,H,I,J,K,L,N,O,P,Q,T
**Manual:** 8
**0.25% Pb:** No
**Spare Parts Only:** Yes
**Approved:** 12-Dec-1996
**Renewed:** 12-Dec-2017
**Bypass:** Wilkins 950XL 3/4" (VU)
**Shutoffs:** (hh),ff,mm,uu,zz,vvvv,wwww,yyyy,zzzz

---

**Type:** DCDA
**Manufacturer:** Wilkins
**Model:** 950DA
**Size:** 3
**Orientation:** H
**Meters:** (M),A,B,C,D,E,F,G,H,I,J,K,L,N,O,P,Q,T
**Manual:** 8
**0.25% Pb:** No
**Spare Parts Only:** Yes
**Approved:** 02-Jan-1994
**Renewed:** 02-Jan-2017
**Bypass:** Wilkins 950XL 3/4" (H), Wilkins 950 3/4" (H)
**Shutoffs:** (hh),ff,mm,uu,zz,vvvv,wwww,yyyy,zzzz

---

**Type:** DCDA
**Manufacturer:** Wilkins
**Model:** 950DA
**Size:** 3
**Orientation:** VU
**Meters:** (M),D,E,F,G,H,I,J,K,L,N,O,P,Q,T
**Manual:** 8
**0.25% Pb:** No
**Spare Parts Only:** Yes
**Approved:** 12-Dec-1996
**Renewed:** 12-Dec-2017
**Bypass:** Wilkins 950XL 3/4" (VU)
**Shutoffs:** (hh),ff,mm,uu,zz,vvvv,wwww,yyyy,zzzz

---

**Type:** DCDA
**Manufacturer:** Wilkins
**Model:** 950DA
**Size:** 4
**Orientation:** H
**Meters:** (M),E,F,G,H,I,J,K,L,N,O,P,Q,T
**Manual:** 8
**0.25% Pb:** No
**Spare Parts Only:** Yes
**Approved:** 09-Jun-1993
**Renewed:** 09-Jun-2017
**Bypass:** Wilkins 950XL 3/4" (H), Wilkins 950 3/4" (H)
**Shutoffs:** hh,ff,mm,uu,zz,vvvv,wwww,yyyy,zzzz

---

**Type:** DCDA
**Manufacturer:** Wilkins
**Model:** 950DA
**Size:** 4
**Orientation:** VU
**Meters:** (M),A,B,C,D,E,F,G,H,I,J,K,L,N,O,P,Q,T
**Manual:** 8
**0.25% Pb:** No
**Spare Parts Only:** Yes
**Approved:** 12-Dec-1996
**Renewed:** 12-Dec-2017
**Bypass:** Wilkins 950XL 3/4" (VU)
**Shutoffs:** hh,ff,mm,uu,zz,vvvv,wwww,yyyy,zzzz

**Type:** DCDA
**Manufacturer:** Wilkins
**Model:** 950DA
**Size:** 6
**Orientation:** H
**Meters:** (M),A,B,C,D,E,F,G,H,I,J,K,L,N,O,P,Q,T
**Manual:** 8
**0.25% Pb:** No
**Spare Parts Only:** Yes
**Approved:** 09-Jun-1993
**Renewed:** 09-Jun-2017
**Bypass:** Wilkins 950XL 3/4" (H), Wilkins 950 3/4" (H)
**Shutoffs:** hh,ff,mm,uu,zz,vvvv,wwww,yyyy,zzzz

---

**Type:** DCDA
**Manufacturer:** Wilkins
**Model:** 950DA
**Size:** 6
**Orientation:** VU
**Meters:** (M),D,E,F,G,H,I,J,K,L,N,O,P,Q,T
**Manual:** 8
**0.25% Pb:** No
**Spare Parts Only:** Yes
**Approved:** 12-Dec-1996
**Renewed:** 12-Dec-2017
**Bypass:** Wilkins 950XL 3/4" (VU)
**Shutoffs:** hh,ff,mm,uu,zz,vvvv,wwww,yyyy,zzzz

---

**Type:** DCDA
**Manufacturer:** Wilkins
**Model:** 950DA
**Size:** 8
**Orientation:** H
**Meters:** (M),E,F,G,H,I,J,K,L,N,O,P,Q,T
**Manual:** 8
**0.25% Pb:** No
**Spare Parts Only:** Yes
**Approved:** 09-Jun-1993
**Renewed:** 09-Jun-2017
**Bypass:** Wilkins 950XL 3/4" (H), Wilkins 950 3/4" (H)
**Shutoffs:** (hh),ff,mm,uu,zz,vvvv,wwww,yyyy.zzzz

---

**Type:** DCDA
**Manufacturer:** Wilkins
**Model:** 950DA
**Size:** 8
**Orientation:** VU
**Meters:** (M),A,B,C,D,E,F,G,H,I,J,K,L,N,O,P,Q,T
**Manual:** 8
**0.25% Pb:** No
**Spare Parts Only:** Yes
**Approved:** 12-Dec-1996
**Renewed:** 12-Dec-2017
**Bypass:** Wilkins 950XL 3/4" (VU)
**Shutoffs:** (hh),ff,mm,uu,zz,vvvv,wwww,yyyy.zzzz

---

**Type:** DCDA
**Manufacturer:** Wilkins
**Model:** 950DA
**Size:** 10
**Orientation:** H
**Meters:** (M),A,B,C,D,E,F,G,H,I,J,K,L,N,O,P,Q,T
**Manual:** 8
**0.25% Pb:** No
**Spare Parts Only:** Yes
**Approved:** 23-Jun-1994
**Renewed:** 23-Jun-2018
**Bypass:** Wilkins 950XL 3/4" (H), Wilkins 950 3/4" (H)
**Shutoffs:** (hh),ff,mm,uu,zz,vvvv,wwww,yyyy.zzzz

---

**Type:** DCDA
**Manufacturer:** Wilkins
**Model:** 950XLTDA
**Size:** 2
**Orientation:** H
**Meters:** (N),F,G,H,I,J,K,L,M,O,P,Q,T
**Manual:** 9
**0.25% Pb:** No
**Spare Parts Only:** No
**Approved:** 19-May-2009
**Renewed:** 19-May-2018
**Bypass:** Wilkins 350D 3/4" (H)
**Shutoffs:** (bbb)


2018 © University of Southern California

**Type:** DCDA
**Size:** 2
**Manual:** 9
**Approved:** 22-Jun-2009
**Shutoffs:** (bbb)
**Manufacturer:** Wilkins
**Orientation:** VU
**0.25% Pb:** No
**Renewed:** 22-Jun-2018
**Model:** 950XLTDA
**Meters:** (N),F,G,H,I,J,K,L,M,O,P,Q,T
**Spare Parts Only:** No
**Bypass:** Wilkins 350D 3/4" (VU)

---

**Type:** DCDA
**Size:** 2
**Manual:** 9
**Approved:** 19-May-2009
**Shutoffs:** (bbbbb), ccccc,pppppp
**Manufacturer:** Wilkins
**Orientation:** H
**0.25% Pb:** No
**Renewed:** 19-May-2018
**Model:** 950XLTDABF
**Meters:** (N),F,G,H,I,J,K,L,M,O,P,Q,T
**Spare Parts Only:** No
**Bypass:** Wilkins 350D 3/4" (H)

---

**Type:** DCDA
**Size:** 2
**Manual:** 9
**Approved:** 22-Jun-2009
**Shutoffs:** (bbbbb), ccccc,pppppp
**Manufacturer:** Wilkins
**Orientation:** VU
**0.25% Pb:** No
**Renewed:** 22-Jun-2018
**Model:** 950XLTDABF
**Meters:** (N),F,G,H,I,J,K,L,M,O,P,Q,T
**Spare Parts Only:** No
**Bypass:** Wilkins 350D 3/4" (VU)

---

**Type:** DCDA
**Size:** 2 1/2
**Manual:** 7
**Approved:** 05-Mar-1987
**Shutoffs:** hh,ff,mm,uu,zz
**Manufacturer:** Wilkins
**Orientation:** H
**0.25% Pb:** No
**Renewed:** 05-Mar-2017
**Model:** DCDA
**Meters:** (M),B,C,D,E,F,G,H,I,J,K,L,N,O,P,Q,T
**Spare Parts Only:** Yes
**Bypass:** Wilkins 550A 3/4" (H)

---

**Type:** DCDA
**Size:** 3
**Manual:** 7
**Approved:** 05-Mar-1987
**Shutoffs:** hh,ff,mm,uu,zz
**Manufacturer:** Wilkins
**Orientation:** H
**0.25% Pb:** No
**Renewed:** 05-Mar-2017
**Model:** DCDA
**Meters:** (M),B,C,D,E,F,G,H,I,J,K,L,N,O,P,Q,T
**Spare Parts Only:** Yes
**Bypass:** Wilkins 550A 3/4" (H)

---

**Type:** DCDA
**Size:** 4
**Manual:** 7
**Approved:** 18-May-1988
**Shutoffs:** hh,ff,mm,uu,zz
**Manufacturer:** Wilkins
**Orientation:** H
**0.25% Pb:** No
**Renewed:** 18-May-2018
**Model:** DCDA
**Meters:** (M),A,B,C,D,E,F,G,H,I,J,K,L,N,O,P,Q,T
**Spare Parts Only:** Yes
**Bypass:** Wilkins 550A 3/4" (H)

**Type:** DCDA
**Manufacturer:** Wilkins
**Model:** DCDA
**Size:** 6
**Orientation:** H
**Meters:** (M),A,B,C,D,E,F,G,H,I,J,K,L,N,O,P,Q,T
**Manual:** 7
**0.25% Pb:** No
**Spare Parts Only:** Yes
**Approved:** 02-Jun-1988
**Renewed:** 01-Jun-2018
**Bypass:** Wilkins 550A 3/4" (H)
**Shutoffs:** hh,ff,mm,uu,zz

---

**Type:** DCDA-II
**Manufacturer:** Apollo/Conbraco
**Model:** DCDA24A
**Size:** 1 1/2
**Orientation:** H
**Meters:** (M),G,H,I,J,K,L,N,O,P,Q,T
**Manual:** 10
**0.25% Pb:** No
**Spare Parts Only:** No
**Approved:** 31-Oct-2016
**Renewed:**
**Bypass:** Apollo 1/2" Model CVA4A (HVD)
**Shutoffs:** (dddddd)

---

**Type:** DCDA-II
**Manufacturer:** Apollo/Conbraco
**Model:** DCDA24A
**Size:** 1 1/2
**Orientation:** VU
**Meters:** (M),G,H,I,J,K,L,N,O,P,Q,T
**Manual:** 10
**0.25% Pb:** No
**Spare Parts Only:** No
**Approved:** 31-Oct-2016
**Renewed:**
**Bypass:** Apollo 1/2" Model CVA4A (VUH)
**Shutoffs:** (dddddd)

---

**Type:** DCDA-II
**Manufacturer:** Apollo/Conbraco
**Model:** DCDA24A
**Size:** 2
**Orientation:** H
**Meters:** (M),G,H,I,J,K,L,N,O,P,Q,T
**Manual:** 10
**0.25% Pb:** No
**Spare Parts Only:** No
**Approved:** 31-Oct-2016
**Renewed:**
**Bypass:** Apollo 1/2" Model CVA4A (HVD)
**Shutoffs:** (dddddd)

---

**Type:** DCDA-II
**Manufacturer:** Apollo/Conbraco
**Model:** DCDA24A
**Size:** 2
**Orientation:** VU
**Meters:** (M),G,H,I,J,K,L,N,O,P,Q,T
**Manual:** 10
**0.25% Pb:** No
**Spare Parts Only:** No
**Approved:** 31-Oct-2016
**Renewed:**
**Bypass:** Apollo 1/2" Model CVA4A (VUH)
**Shutoffs:** (dddddd)

---

**Type:** DCDA-II
**Manufacturer:** Apollo/Conbraco
**Model:** DCDA2LF4A
**Size:** 1 1/2
**Orientation:** H
**Meters:** (M),G,H,I,J,K,L,N,O,P,Q,T
**Manual:** 10
**0.25% Pb:** No
**Spare Parts Only:** No
**Approved:** 31-Oct-2016
**Renewed:**
**Bypass:** Apollo 1/2" Model CVALF4A (HVD)
**Shutoffs:** (eeeeee)


2018 © University of Southern California

**Type:** DCDA-II
**Manufacturer:** Apollo/Conbraco
**Model:** DCDA2LF4A
**Size:** 1 1/2
**Orientation:** VU
**Meters:** (M),G,H,I,J,K,L,N,O,P,Q,T
**Manual:** 10
**0.25% Pb:** No
**Spare Parts Only:** No
**Approved:** 31-Oct-2016
**Renewed:**
**Bypass:** Apollo 1/2" Model CVALF4A (VUH)
**Shutoffs:** (eeeeee)

---

**Type:** DCDA-II
**Manufacturer:** Apollo/Conbraco
**Model:** DCDA2LF4A
**Size:** 2
**Orientation:** H
**Meters:** (M),G,H,I,J,K,L,N,O,P,Q,T
**Manual:** 10
**0.25% Pb:** No
**Spare Parts Only:** No
**Approved:** 31-Oct-2016
**Renewed:**
**Bypass:** Apollo 1/2" Model CVALF4A (HVD)
**Shutoffs:** (eeeeee)

---

**Type:** DCDA-II
**Manufacturer:** Apollo/Conbraco
**Model:** DCDA2LF4A
**Size:** 2
**Orientation:** VU
**Meters:** (M),G,H,I,J,K,L,N,O,P,Q,T
**Manual:** 10
**0.25% Pb:** No
**Spare Parts Only:** No
**Approved:** 31-Oct-2016
**Renewed:**
**Bypass:** Apollo 1/2" Model CVALF4A (VUH)
**Shutoffs:** (eeeeee)

---

**Type:** DCDA-II
**Manufacturer:** Apollo/Conbraco
**Model:** DCDA2LF4A
**Size:** 2 1/2
**Orientation:** H
**Meters:** (M),G,H,I,J,K,L,N,O,P,Q,T
**Manual:** 10
**0.25% Pb:** No
**Spare Parts Only:** No
**Approved:** 15-Dec-2017
**Renewed:**
**Bypass:** Apollo 1/2" Model CVALF4A (HVD)
**Shutoffs:** (xxxxx),yyy,yyyyy,zzzzz,aaaaaa

---

**Type:** DCDA-II
**Manufacturer:** Apollo/Conbraco
**Model:** DCDA2LF4A
**Size:** 2 1/2
**Orientation:** VU
**Meters:** (M),G,H,I,J,K,L,N,O,P,Q,T
**Manual:** 10
**0.25% Pb:** No
**Spare Parts Only:** No
**Approved:** 15-Dec-2017
**Renewed:**
**Bypass:** Apollo 1/2" Model CVALF4A (VUH)
**Shutoffs:** (xxxxx),yyy,yyyyy,zzzzz,aaaaaa

---

**Type:** DCDA-II
**Manufacturer:** Apollo/Conbraco
**Model:** DCDA2LF4A
**Size:** 3
**Orientation:** H
**Meters:** (M),G,H,I,J,K,L,N,O,P,Q,T
**Manual:** 10
**0.25% Pb:** No
**Spare Parts Only:** No
**Approved:** 15-Dec-2017
**Renewed:**
**Bypass:** Apollo 1/2" Model CVALF4A (HVD)
**Shutoffs:** (xxxxx),yyy,yyyyy,zzzzz,aaaaaa

**Type:** DCDA-II
**Manufacturer:** Apollo/Conbraco
**Model:** DCDA2LF4A
**Size:** 3
**Orientation:** VU
**Meters:** (M),G,H,I,J,K,L,N,O,P,Q,T
**Manual:** 10
**0.25% Pb:** No
**Spare Parts Only:** No
**Approved:** 15-Dec-2017
**Renewed:**
**Bypass:** Apollo 1/2" Model CVALF4A (VUH)
**Shutoffs:** (xxxxx),yyy,yyyyy,zzzzz,aaaaaa

---

**Type:** DCDA-II
**Manufacturer:** Apollo/Conbraco
**Model:** DCDA2LF4A
**Size:** 4
**Orientation:** H
**Meters:** (M),G,H,I,J,K,L,N,O,P,Q,T
**Manual:** 10
**0.25% Pb:** No
**Spare Parts Only:** No
**Approved:** 15-Dec-2017
**Renewed:**
**Bypass:** Apollo 1/2" Model CVALF4A (HVD)
**Shutoffs:** (xxxxx),yyy,yyyyy,zzzzz,aaaaaa

---

**Type:** DCDA-II
**Manufacturer:** Apollo/Conbraco
**Model:** DCDA2LF4A
**Size:** 4
**Orientation:** VU
**Meters:** (M),G,H,I,J,K,L,N,O,P,Q,T
**Manual:** 10
**0.25% Pb:** No
**Spare Parts Only:** No
**Approved:** 15-Dec-2017
**Renewed:**
**Bypass:** Apollo 1/2" Model CVALF4A (H)
**Shutoffs:** (xxxxx),yyy,yyyyy,zzzzz,aaaaaa

---

**Type:** DCDA-II
**Manufacturer:** Apollo/Conbraco
**Model:** DCDA2LF4A
**Size:** 6
**Orientation:** H
**Meters:** (M),G,H,I,J,K,L,N,O,P,Q,T
**Manual:** 10
**0.25% Pb:** No
**Spare Parts Only:** No
**Approved:** 15-Dec-2017
**Renewed:**
**Bypass:** Apollo 1/2" Model CVALF4A (HVD)
**Shutoffs:** (xxxxx),yyy,yyyyy,zzzzz,aaaaaa

---

**Type:** DCDA-II
**Manufacturer:** Apollo/Conbraco
**Model:** DCDA2LF4A
**Size:** 6
**Orientation:** VU
**Meters:** (M),G,H,I,J,K,L,N,O,P,Q,T
**Manual:** 10
**0.25% Pb:** No
**Spare Parts Only:** No
**Approved:** 15-Dec-2017
**Renewed:**
**Bypass:** Apollo 1/2" Model CVALF4A (H)
**Shutoffs:** (xxxxx),yyy,yyyyy,zzzzz,aaaaaa

---

**Type:** DCDA-II
**Manufacturer:** Apollo/Conbraco
**Model:** DCDA2LF4A
**Size:** 8
**Orientation:** H
**Meters:** (M),G,H,I,J,K,L,N,O,P,Q,T
**Manual:** 10
**0.25% Pb:** No
**Spare Parts Only:** No
**Approved:** 15-Dec-2017
**Renewed:**
**Bypass:** Apollo 1/2" Model CVALF4A (HVD)
**Shutoffs:** (xxxxx),yyy,yyyyy,zzzzz,aaaaaa


2018 © University of Southern California

**Type:** DCDA-II
**Manufacturer:** Apollo/Conbraco
**Model:** DCDA2LF4A
**Size:** 8
**Orientation:** VU
**Meters:** (M),G,H,I,J,K,L,N,O,P,Q,T
**Manual:** 10
**0.25% Pb:** No
**Spare Parts Only:** No
**Approved:** 15-Dec-2017
**Renewed:**
**Bypass:** Apollo 1/2" Model CVALF4A (H)
**Shutoffs:** (xxxxx),yyy,yyyyy,zzzzz,aaaaaa

---

**Type:** DCDA-II
**Manufacturer:** Apollo/Conbraco
**Model:** DCDA2LF4AR
**Size:** 2 1/2
**Orientation:** H
**Meters:** (M),G,H,I,J,K,L,N,O,Q,T
**Manual:** 10
**0.25% Pb:** No
**Spare Parts Only:** No
**Approved:** 27-Mar-2018
**Renewed:**
**Bypass:** Apollo 1/2" Model CVALF4A (HVD)
**Shutoffs:** (xxxxx),zzz,cccc,dddd,kkkk,llll,mmmm,nnnn,yyyyy,zzzzz,aaaaaa
**Notes:** Integral Stainless Steel grooved spool between the #2 ck and #2 SOV - assembly length: min. 34" and max. 47 1/8"

---

**Type:** DCDA-II
**Manufacturer:** Apollo/Conbraco
**Model:** DCDA2LF4AR
**Size:** 2 1/2
**Orientation:** VU
**Meters:** (M),G,H,I,J,K,L,N,O,Q,T
**Manual:** 10
**0.25% Pb:** No
**Spare Parts Only:** No
**Approved:** 27-Mar-2018
**Renewed:**
**Bypass:** Apollo 1/2" Model CVALF4A (VUH)
**Shutoffs:** (xxxxx),zzz,cccc,dddd,kkkk,llll,mmmm,nnnn,yyyyy,zzzzz,aaaaaa
**Notes:** Integral Stainless Steel grooved spool between the #2 ck and #2 SOV - assembly length: min. 34" and max. 47 1/8"

---

**Type:** DCDA-II
**Manufacturer:** Apollo/Conbraco
**Model:** DCDA2LF4AR
**Size:** 3
**Orientation:** H
**Meters:** (M),G,H,I,J,K,L,N,O,Q,T
**Manual:** 10
**0.25% Pb:** No
**Spare Parts Only:** No
**Approved:** 27-Mar-2018
**Renewed:**
**Bypass:** Apollo 1/2" Model CVALF4A (HVD)
**Shutoffs:** (xxxxx),zzz,cccc,dddd,kkkk,llll,mmmm,nnnn,yyyyy,zzzzz,aaaaaa
**Notes:** Integral Stainless Steel grooved spool between the #2 ck and #2 SOV - assembly length: min. 35" and max. 48 1/8"

---

**Type:** DCDA-II
**Manufacturer:** Apollo/Conbraco
**Model:** DCDA2LF4AR
**Size:** 3
**Orientation:** VU
**Meters:** (M),G,H,I,J,K,L,N,O,Q,T
**Manual:** 10
**0.25% Pb:** No
**Spare Parts Only:** No
**Approved:** 27-Mar-2018
**Renewed:**
**Bypass:** Apollo 1/2" Model CVALF4A (VUH)
**Shutoffs:** (xxxxx),zzz,cccc,dddd,kkkk,llll,mmmm,nnnn,yyyyy,zzzzz,aaaaaa
**Notes:** Integral Stainless Steel grooved spool between the #2 ck and #2 SOV - assembly length: min. 35" and max. 48 1/8"

**Type:** DCDA-II
**Manufacturer:** Apollo/Conbraco
**Model:** DCDA2LF4AR
**Size:** 4
**Orientation:** H
**Meters:** (M),G,H,I,J,K,L,N,O,Q,T
**Manual:** 10
**0.25% Pb:** No
**Spare Parts Only:** No
**Approved:** 27-Mar-2018
**Renewed:**
**Bypass:** Apollo 1/2" Model CVALF4A (HVD)
**Shutoffs:** (xxxxx),zzz,cccc,dddd,kkkk,llll,mmmm,nnnn,yyyyy,zzzzz,aaaaaa
**Notes:** Integral Stainless Steel grooved spool between the #2 ck and #2 SOV - assembly length: min. 37 3/8" and max. 62 1/4"

---

**Type:** DCDA-II
**Manufacturer:** Apollo/Conbraco
**Model:** DCDA2LF4AR
**Size:** 4
**Orientation:** VU
**Meters:** (M),G,H,I,J,K,L,N,O,Q,T
**Manual:** 10
**0.25% Pb:** No
**Spare Parts Only:** No
**Approved:** 27-Mar-2018
**Renewed:**
**Bypass:** Apollo 1/2" Model CVALF4A (H)
**Shutoffs:** (xxxxx),zzz,cccc,dddd,kkkk,llll,mmmm,nnnn,yyyyy,zzzzz,aaaaaa
**Notes:** Integral Stainless Steel grooved spool between the #2 ck and #2 SOV - assembly length: min. 37 3/8" and max. 62 1/4"

---

**Type:** DCDA-II
**Manufacturer:** Apollo/Conbraco
**Model:** DCDA2LF4AR
**Size:** 6
**Orientation:** H
**Meters:** (M),G,H,I,J,K,L,N,O,Q,T
**Manual:** 10
**0.25% Pb:** No
**Spare Parts Only:** No
**Approved:** 27-Mar-2018
**Renewed:**
**Bypass:** Apollo 1/2" Model CVALF4A (HVD)
**Shutoffs:** (xxxxx),zzz,cccc,dddd,kkkk,llll,mmmm,nnnn,yyyyy,zzzzz,aaaaaa
**Notes:** Integral Stainless Steel grooved spool between the #2 ck and #2 SOV - assembly length: min. 46" and max. 71 1/4"

---

**Type:** DCDA-II
**Manufacturer:** Apollo/Conbraco
**Model:** DCDA2LF4AR
**Size:** 6
**Orientation:** VU
**Meters:** (M),G,H,I,J,K,L,N,O,Q,T
**Manual:** 10
**0.25% Pb:** No
**Spare Parts Only:** No
**Approved:** 27-Mar-2018
**Renewed:**
**Bypass:** Apollo 1/2" Model CVALF4A (H)
**Shutoffs:** (xxxxx),zzz,cccc,dddd,kkkk,llll,mmmm,nnnn,yyyyy,zzzzz,aaaaaa
**Notes:** Integral Stainless Steel grooved spool between the #2 ck and #2 SOV - assembly length: min. 46" and max. 71 1/4"

---


2018 © University of Southern California

**Type:** DCDA-II
**Manufacturer:** Apollo/Conbraco
**Model:** DCDA2LF4AR
**Size:** 8
**Orientation:** H
**Meters:** (M),G,H,I,J,K,L,N,O,Q,T
**Manual:** 10
**0.25% Pb:** No
**Spare Parts Only:** No
**Approved:** 27-Mar-2018
**Renewed:**
**Bypass:** Apollo 1/2" Model CVALF4A (HVD)
**Shutoffs:** (xxxxx),zzz,cccc,dddd,kkkk,llll,mmmm,nnnn,yyyyy,zzzzz,aaaaaa
**Notes:** Integral Stainless Steel grooved spool between the #2 ck and #2 SOV - assembly length: min. 55 3/4" and max. 86"

---

**Type:** DCDA-II
**Manufacturer:** Apollo/Conbraco
**Model:** DCDA2LF4AR
**Size:** 8
**Orientation:** VU
**Meters:** (M),G,H,I,J,K,L,N,O,Q,T
**Manual:** 10
**0.25% Pb:** No
**Spare Parts Only:** No
**Approved:** 27-Mar-2018
**Renewed:**
**Bypass:** Apollo 1/2" Model CVALF4A (H)
**Shutoffs:** (xxxxx),zzz,cccc,dddd,kkkk,llll,mmmm,nnnn,yyyyy,zzzzz,aaaaaa
**Notes:** Integral Stainless Steel grooved spool between the #2 ck and #2 SOV - assembly length: min. 55 3/4" and max. 86"

---

**Type:** DCDA-II
**Manufacturer:** Backflow Direct
**Model:** Deringer 30
**Size:** 2 1/2
**Orientation:** H
**Meters:** (O),G,H,I,J,K,L,M,N,Q,T
**Manual:** 10
**0.25% Pb:** Yes
**Spare Parts Only:** No
**Approved:** 21-Dec-2015
**Renewed:**
**Bypass:** Backflow Direct 1/2" CV(HVD)
**Shutoffs:** (int)

---

**Type:** DCDA-II
**Manufacturer:** Backflow Direct
**Model:** Deringer 30
**Size:** 2 1/2
**Orientation:** VU
**Meters:** (O),G,H,I,J,K,L,M,N,Q,T
**Manual:** 10
**0.25% Pb:** Yes
**Spare Parts Only:** No
**Approved:** 21-Dec-2015
**Renewed:**
**Bypass:** Backflow Direct 1/2" CV(VUH)
**Shutoffs:** (int)

---

**Type:** DCDA-II
**Manufacturer:** Backflow Direct
**Model:** Deringer 30
**Size:** 3
**Orientation:** H
**Meters:** (O),G,H,I,J,K,L,M,N,Q,T
**Manual:** 10
**0.25% Pb:** Yes
**Spare Parts Only:** No
**Approved:** 21-Dec-2015
**Renewed:**
**Bypass:** Backflow Direct 1/2" CV(HVD)
**Shutoffs:** (int)

---

**Type:** DCDA-II
**Manufacturer:** Backflow Direct
**Model:** Deringer 30
**Size:** 3
**Orientation:** VU
**Meters:** (O),G,H,I,J,K,L,M,N,Q,T
**Manual:** 10
**0.25% Pb:** Yes
**Spare Parts Only:** No
**Approved:** 21-Dec-2015
**Renewed:**
**Bypass:** Backflow Direct 1/2" CV(VUH)
**Shutoffs:** (int)

**Type:** DCDA-II
**Size:** 4
**Manual:** 10
**Approved:** 30-Sep-2015
**Shutoffs:** (int)
**Manufacturer:** Backflow Direct
**Orientation:** H
**0.25% Pb:** Yes
**Renewed:** 30-Sep-2018
**Model:** Deringer 30
**Meters:** (O),G,H,I,J,K,L,M,N,Q,T
**Spare Parts Only:** No
**Bypass:** Backflow Direct 1/2" CV(HVD)

---

**Type:** DCDA-II
**Size:** 4
**Manual:** 10
**Approved:** 30-Sep-2015
**Shutoffs:** (int)
**Manufacturer:** Backflow Direct
**Orientation:** VU
**0.25% Pb:** Yes
**Renewed:** 30-Sep-2018
**Model:** Deringer 30
**Meters:** (O),G,H,I,J,K,L,M,N,Q,T
**Spare Parts Only:** No
**Bypass:** Backflow Direct 1/2" CV(VUH)

---

**Type:** DCDA-II
**Size:** 8
**Manual:** 10
**Approved:** 23-Dec-2016
**Shutoffs:** (int)
**Manufacturer:** Backflow Direct
**Orientation:** H
**0.25% Pb:** Yes
**Renewed:**
**Model:** Deringer 30
**Meters:** (O),G,H,I,J,K,L,M,N,Q,T
**Spare Parts Only:** No
**Bypass:** Backflow Direct 1/2" CV(HVD)

---

**Type:** DCDA-II
**Size:** 8
**Manual:** 10
**Approved:** 23-Dec-2016
**Shutoffs:** (int)
**Manufacturer:** Backflow Direct
**Orientation:** VU
**0.25% Pb:** Yes
**Renewed:**
**Model:** Deringer 30
**Meters:** (O),G,H,I,J,K,L,M,N,Q,T
**Spare Parts Only:** No
**Bypass:** Backflow Direct 1/2" CV(VUH)

---

**Type:** DCDA-II
**Size:** 8
**Manual:** 10
**Approved:** 31-Jul-2018
**Shutoffs:** (ssssss), tttttt
**Manufacturer:** Backflow Direct
**Orientation:** H
**0.25% Pb:** Yes
**Renewed:**
**Model:** Deringer 30G
**Meters:** (O),G,H,I,J,K,L,M,N,Q,T
**Spare Parts Only:** No
**Bypass:** Backflow Direct 1/2" CV(HVD)

---

**Type:** DCDA-II
**Size:** 8
**Manual:** 10
**Approved:** 31-Jul-2018
**Shutoffs:** (ssssss), tttttt
**Manufacturer:** Backflow Direct
**Orientation:** VU
**0.25% Pb:** Yes
**Renewed:**
**Model:** Deringer 30G
**Meters:** (O),G,H,I,J,K,L,M,N,Q,T
**Spare Parts Only:** No
**Bypass:** Backflow Direct 1/2" CV(VUH)

---

**Type:** DCDA-II
**Size:** 6
**Manual:** 10
**Approved:** 31-Jul-2018
**Shutoffs:** (ssssss), tttttt
**Manufacturer:** Backflow Direct
**Orientation:** H
**0.25% Pb:** Yes
**Renewed:**
**Model:** Deringer 30GX
**Meters:** (O),G,H,I,J,K,L,M,N,Q,T
**Spare Parts Only:** No
**Bypass:** Backflow Direct 1/2" CV(HVD)


2018 © University of Southern California

**Type:** DCDA-II
**Size:** 6
**Manual:** 10
**Approved:** 31-Jul-2018
**Shutoffs:** (ssssss), tttttt
**Manufacturer:** Backflow Direct
**Orientation:** VU
**0.25% Pb:** Yes
**Renewed:**
**Model:** Deringer 30GX
**Meters:** (O),G,H,I,J,K,L,M,N,Q,T
**Spare Parts Only:** No
**Bypass:** Backflow Direct 1/2" CV(VUH)

---

**Type:** DCDA-II
**Size:** 6
**Manual:** 10
**Approved:** 23-Dec-2016
**Shutoffs:** (int)
**Manufacturer:** Backflow Direct
**Orientation:** H
**0.25% Pb:** Yes
**Renewed:**
**Model:** Deringer 30X
**Meters:** (O),G,H,I,J,K,L,M,N,Q,T
**Spare Parts Only:** No
**Bypass:** Backflow Direct 1/2" CV(HVD)

---

**Type:** DCDA-II
**Size:** 6
**Manual:** 10
**Approved:** 23-Dec-2016
**Shutoffs:** (int)
**Manufacturer:** Backflow Direct
**Orientation:** VU
**0.25% Pb:** Yes
**Renewed:**
**Model:** Deringer 30X
**Meters:** (O),G,H,I,J,K,L,M,N,Q,T
**Spare Parts Only:** No
**Bypass:** Backflow Direct 1/2" CV(VUH)

---

**Type:** DCDA-II
**Size:** 2 1/2
**Manual:** 10
**Approved:** 20-Mar-2015
**Shutoffs:** (mm), ll,oo,pp,zzz,cccc,dddd,eeee,ffff,gggg,nnnnn
**Manufacturer:** Febco
**Orientation:** H
**0.25% Pb:** Yes
**Renewed:** 20-Mar-2018
**Model:** LF856
**Meters:** (O),G,H,I,J,K,L,M,N,P,Q,T
**Spare Parts Only:** No
**Bypass:** Watts 3/4" LF619 (H)

---

**Type:** DCDA-II
**Size:** 2 1/2
**Manual:** 10
**Approved:** 20-Mar-2015
**Shutoffs:** (mm), ll,oo,pp,zzz,cccc,dddd,eeee,ffff,gggg,nnnnn
**Manufacturer:** Febco
**Orientation:** VU
**0.25% Pb:** Yes
**Renewed:** 20-Mar-2018
**Model:** LF856
**Meters:** (O),G,H,I,J,K,L,M,N,P,Q,T
**Spare Parts Only:** No
**Bypass:** Watts 3/4" LF619 (HVU)

---

**Type:** DCDA-II
**Size:** 3
**Manual:** 10
**Approved:** 20-Mar-2015
**Shutoffs:** (mm), ll,oo,pp,zzz,cccc,dddd,eeee,ffff,gggg,nnnnn
**Manufacturer:** Febco
**Orientation:** H
**0.25% Pb:** Yes
**Renewed:** 20-Mar-2018
**Model:** LF856
**Meters:** (O),G,H,I,J,K,L,M,N,P,Q,T
**Spare Parts Only:** No
**Bypass:** Watts 3/4" LF619 (H)

---

**Type:** DCDA-II
**Size:** 3
**Manual:** 10
**Approved:** 20-Mar-2015
**Shutoffs:** (mm), ll,oo,pp,zzz,cccc,dddd,eeee,ffff,gggg,nnnnn
**Manufacturer:** Febco
**Orientation:** VU
**0.25% Pb:** Yes
**Renewed:** 20-Mar-2018
**Model:** LF856
**Meters:** (O),G,H,I,J,K,L,M,N,P,Q,T
**Spare Parts Only:** No
**Bypass:** Watts 3/4" LF619 (HVU)

**Type:** DCDA-II **Manufacturer:** Febco **Model:** LF856
**Size:** 4 **Orientation:** H **Meters:** (O),G,H,I,J,K,L,M,N,P,Q,T
**Manual:** 10 **0.25% Pb:** Yes **Spare Parts Only:** No
**Approved:** 26-Jan-2015 **Renewed:** 26-Jan-2018 **Bypass:** Watts 3/4" LF619 (H)
**Shutoffs:** (mm), ll,oo,pp,zzz,cccc,dddd,eeee,ffff,gggg,nnnnn

---

**Type:** DCDA-II **Manufacturer:** Febco **Model:** LF856
**Size:** 4 **Orientation:** VU **Meters:** (O),G,H,I,J,K,L,M,N,P,Q,T
**Manual:** 10 **0.25% Pb:** Yes **Spare Parts Only:** No
**Approved:** 26-Jan-2015 **Renewed:** 26-Jan-2018 **Bypass:** Watts 3/4" LF619 (HVU)
**Shutoffs:** (mm), ll,oo,pp,zzz,cccc,dddd,eeee,ffff,gggg,nnnnn

---

**Type:** DCDA-II **Manufacturer:** Febco **Model:** LF856
**Size:** 6 **Orientation:** H **Meters:** (O),G,H,I,J,K,L,M,N,P,Q,T
**Manual:** 10 **0.25% Pb:** Yes **Spare Parts Only:** No
**Approved:** 13-Mar-2015 **Renewed:** 13-Mar-2018 **Bypass:** Watts 3/4" LF619 (H)
**Shutoffs:** (mm), ll,oo,pp,zzz,cccc,dddd,eeee,ffff,gggg,nnnnn

---

**Type:** DCDA-II **Manufacturer:** Febco **Model:** LF856
**Size:** 6 **Orientation:** VU **Meters:** (O),G,H,I,J,K,L,M,N,P,Q,T
**Manual:** 10 **0.25% Pb:** Yes **Spare Parts Only:** No
**Approved:** 13-Mar-2015 **Renewed:** 13-Mar-2018 **Bypass:** Watts 3/4" LF619 (HVU)
**Shutoffs:** (mm), ll,oo,pp,zzz,cccc,dddd,eeee,ffff,gggg,nnnnn

---

**Type:** DCDA-II **Manufacturer:** Febco **Model:** LF856
**Size:** 8 **Orientation:** H **Meters:** (O),G,H,I,J,K,L,M,N,P,Q,T
**Manual:** 10 **0.25% Pb:** Yes **Spare Parts Only:** No
**Approved:** 07-Jul-2015 **Renewed:** 07-Jul-2018 **Bypass:** Watts 3/4" LF619 (H)
**Shutoffs:** (mm), ll,oo,pp,zzz,cccc,dddd,eeee,ffff,gggg,nnnnn

---

**Type:** DCDA-II **Manufacturer:** Febco **Model:** LF856
**Size:** 8 **Orientation:** VU **Meters:** (O),G,H,I,J,K,L,M,N,P,Q,T
**Manual:** 10 **0.25% Pb:** Yes **Spare Parts Only:** No
**Approved:** 07-Jul-2015 **Renewed:** 07-Jul-2018 **Bypass:** Watts 3/4" LF619 (HVU)
**Shutoffs:** (mm), ll,oo,pp,zzz,cccc,dddd,eeee,ffff,gggg,nnnnn

---

**Type:** DCDA-II **Manufacturer:** Febco **Model:** LF856
**Size:** 10 **Orientation:** H **Meters:** (O),G,H,I,J,K,L,M,N,P,Q,T
**Manual:** 10 **0.25% Pb:** Yes **Spare Parts Only:** No
**Approved:** 07-Jul-2015 **Renewed:** 07-Jul-2018 **Bypass:** Watts 3/4" LF619 (H)
**Shutoffs:** (mm), ll,oo,pp,zzz,cccc,dddd,eeee,ffff,gggg,nnnnn


2018 © University of Southern California

**Type:** DCDA-II **Manufacturer:** Febco **Model:** LF856
**Size:** 10 **Orientation:** VU **Meters:** (O),G,H,I,J,K,L,M,N,P,Q,T
**Manual:** 10 **0.25% Pb:** Yes **Spare Parts Only:** No
**Approved:** 07-Jul-2015 **Renewed:** 07-Jul-2018 **Bypass:** Watts 3/4" LF619 (HVU)
**Shutoffs:** (mm), ll,oo,pp,zzz,cccc,dddd,eeee,ffff,gggg,nnnnn

---

**Type:** DCDA-II **Manufacturer:** Febco **Model:** LF876V
**Size:** 2 1/2 **Orientation:** VUVD **Meters:** (O),G,H,I,J,K,L,M,N,P,Q,T
**Manual:** 10 **0.25% Pb:** Yes **Spare Parts Only:** No
**Approved:** 20-Mar-2015 **Renewed:** 20-Mar-2018 **Bypass:** Watts 3/4" LF619 (HVD)
**Shutoffs:** (mm), ll,oo,pp,zzz,cccc,dddd,eeee,ffff,gggg,nnnnn

---

**Type:** DCDA-II **Manufacturer:** Febco **Model:** LF876V
**Size:** 2 1/2 **Orientation:** VUVU **Meters:** (O),G,H,I,J,K,L,M,N,P,Q,T
**Manual:** 10 **0.25% Pb:** Yes **Spare Parts Only:** No
**Approved:** 20-Mar-2015 **Renewed:** 20-Mar-2018 **Bypass:** Watts 3/4" LF619 (HVD)
**Shutoffs:** (mm), ll,oo,pp,zzz,cccc,dddd,eeee,ffff,gggg,nnnnn

---

**Type:** DCDA-II **Manufacturer:** Febco **Model:** LF876V
**Size:** 3 **Orientation:** VUVD **Meters:** (O),G,H,I,J,K,L,M,N,P,Q,T
**Manual:** 10 **0.25% Pb:** Yes **Spare Parts Only:** No
**Approved:** 20-Mar-2015 **Renewed:** 20-Mar-2018 **Bypass:** Watts 3/4" LF619 (HVU)
**Shutoffs:** (mm), ll,oo,pp,zzz,cccc,dddd,eeee,ffff,gggg,nnnnn

---

**Type:** DCDA-II **Manufacturer:** Febco **Model:** LF876V
**Size:** 3 **Orientation:** VUVU **Meters:** (O),G,H,I,J,K,L,M,N,P,Q,T
**Manual:** 10 **0.25% Pb:** Yes **Spare Parts Only:** No
**Approved:** 20-Mar-2015 **Renewed:** 20-Mar-2018 **Bypass:** Watts 3/4" LF619 (HVD)
**Shutoffs:** (mm), ll,oo,pp,zzz,cccc,dddd,eeee,ffff,gggg,nnnnn

---

**Type:** DCDA-II **Manufacturer:** Febco **Model:** LF876V
**Size:** 4 **Orientation:** VUVD **Meters:** (O),G,H,I,J,K,L,M,N,P,Q,T
**Manual:** 10 **0.25% Pb:** Yes **Spare Parts Only:** No
**Approved:** 26-Jan-2015 **Renewed:** 26-Jan-2018 **Bypass:** Watts 3/4" LF619 (HVU)
**Shutoffs:** (mm), ll,oo,pp,zzz,cccc,dddd,eeee,ffff,gggg,nnnnn

---

**Type:** DCDA-II **Manufacturer:** Febco **Model:** LF876V
**Size:** 4 **Orientation:** VUVU **Meters:** (O),G,H,I,J,K,L,M,N,P,Q,T
**Manual:** 10 **0.25% Pb:** Yes **Spare Parts Only:** No
**Approved:** 26-Jan-2015 **Renewed:** 26-Jan-2018 **Bypass:** Watts 3/4" LF619 (HVD)
**Shutoffs:** (mm), ll,oo,pp,zzz,cccc,dddd,eeee,ffff,gggg,nnnnn

**Type:** DCDA-II
**Manufacturer:** Febco
**Model:** LF876V
**Size:** 6
**Orientation:** VUVD
**Meters:** (O),G,H,I,J,K,L,M,N,P,Q,T
**Manual:** 10
**0.25% Pb:** Yes
**Spare Parts Only:** No
**Approved:** 26-Jan-2015
**Renewed:** 26-Jan-2018
**Bypass:** Watts 3/4" LF619 (HVU)
**Shutoffs:** (mm), ll,oo,pp,zzz,cccc,dddd,eeee,ffff,gggg,nnnnn

---

**Type:** DCDA-II
**Manufacturer:** Febco
**Model:** LF876V
**Size:** 6
**Orientation:** VUVU
**Meters:** (O),J,K,L,M,N,P,Q
**Manual:** 10
**0.25% Pb:** Yes
**Spare Parts Only:** No
**Approved:** 26-Jan-2015
**Renewed:** 26-Jan-2018
**Bypass:** Watts 3/4" LF619 (HVD)
**Shutoffs:** (mm), ll,oo,pp,zzz,cccc,dddd,eeee,ffff,gggg,nnnnn

---

**Type:** DCDA-II
**Manufacturer:** Febco
**Model:** LF876V
**Size:** 8
**Orientation:** VUVD
**Meters:** (O),G,H,I,J,K,L,M,N,P,Q,T
**Manual:** 10
**0.25% Pb:** Yes
**Spare Parts Only:** No
**Approved:** 07-Jul-2015
**Renewed:** 07-Jul-2018
**Bypass:** Watts 3/4" LF619 (HVU)
**Shutoffs:** (mm), ll,oo,pp,zzz,cccc,dddd,eeee,ffff,gggg,nnnnn

---

**Type:** DCDA-II
**Manufacturer:** Febco
**Model:** LF876V
**Size:** 8
**Orientation:** VUVU
**Meters:** (O),G,H,I,J,K,L,M,N,P,Q,T
**Manual:** 10
**0.25% Pb:** Yes
**Spare Parts Only:** No
**Approved:** 07-Jul-2015
**Renewed:** 07-Jul-2018
**Bypass:** Watts 3/4" LF619 (HVD)
**Shutoffs:** (mm), ll,oo,pp,zzz,cccc,dddd,eeee,ffff,gggg,nnnnn

---

**Type:** DCDA-II
**Manufacturer:** Febco
**Model:** LF876V
**Size:** 10
**Orientation:** VUVD
**Meters:** (O),G,H,I,J,K,L,M,N,P,Q,T
**Manual:** 10
**0.25% Pb:** Yes
**Spare Parts Only:** No
**Approved:** 29-May-2018
**Renewed:**
**Bypass:** Watts 3/4" LF619 (HVU)
**Shutoffs:** (mm),ll,oo,pp,zzz,cccc,dddd,eeee,ffff,gggg,nnnnn

---

**Type:** DCDA-II
**Manufacturer:** Febco
**Model:** LF876V
**Size:** 10
**Orientation:** VUVU
**Meters:** (O),G,H,I,J,K,L,M,N,P,Q,T
**Manual:** 10
**0.25% Pb:** Yes
**Spare Parts Only:** No
**Approved:** 29-May-2018
**Renewed:**
**Bypass:** Watts 3/4" LF619 (HVD)
**Shutoffs:** (mm),ll,oo,pp,zzz,cccc,dddd,eeee,ffff,gggg,nnnnn

---

**Type:** PVB
**Manufacturer:** Ames
**Model:** A200
**Size:** 3/4
**Orientation:** VUH
**Meters:**
**Manual:** 8
**0.25% Pb:** No
**Spare Parts Only:** Yes
**Approved:** 06-Apr-1993
**Renewed:** 06-Apr-2017
**Bypass:**
**Shutoffs:** (vv),xx,ooo,hhhh,pppp


2018 © University of Southern California

**Type:** PVB
**Size:** 1
**Manual:** 8
**Approved:** 25-May-1993
**Shutoffs:** (vv),xx,ooo,hhhh,pppp
**Manufacturer:** Ames
**Orientation:** VUH
**0.25% Pb:** No
**Renewed:** 25-May-2017
**Model:** A200
**Meters:**
**Spare Parts Only:** Yes
**Bypass:**

---

**Type:** PVB
**Size:** 1 1/2
**Manual:** 8
**Approved:** 21-Jun-1993
**Shutoffs:** (vv),xx,ooo,hhhh,pppp
**Manufacturer:** Ames
**Orientation:** VUH
**0.25% Pb:** No
**Renewed:** 21-Jun-2017
**Model:** A200
**Meters:**
**Spare Parts Only:** Yes
**Bypass:**

---

**Type:** PVB
**Size:** 2
**Manual:** 8
**Approved:** 21-Jun-1993
**Shutoffs:** (vv),xx,ooo,hhhh,pppp
**Manufacturer:** Ames
**Orientation:** VUH
**0.25% Pb:** No
**Renewed:** 21-Jun-2017
**Model:** A200
**Meters:**
**Spare Parts Only:** Yes
**Bypass:**

---

**Type:** PVB
**Size:** 1/2
**Manual:** 8
**Approved:** 06-Sep-1991
**Shutoffs:** dd
**Manufacturer:** Apollo/Conbraco
**Orientation:** VUH
**0.25% Pb:** No
**Renewed:** 06-Sep-2018
**Model:** 4050302
**Meters:**
**Spare Parts Only:** Yes
**Bypass:**

---

**Type:** PVB
**Size:** 3/4
**Manual:** 8
**Approved:** 06-Sep-1991
**Shutoffs:** (dd)
**Manufacturer:** Apollo/Conbraco
**Orientation:** VUH
**0.25% Pb:** No
**Renewed:** 06-Sep-2018
**Model:** 4050402
**Meters:**
**Spare Parts Only:** Yes
**Bypass:**

---

**Type:** PVB
**Size:** 1
**Manual:** 8
**Approved:** 06-Sep-1991
**Shutoffs:** (dd)
**Manufacturer:** Apollo/Conbraco
**Orientation:** VUH
**0.25% Pb:** No
**Renewed:** 06-Sep-2018
**Model:** 4050502
**Meters:**
**Spare Parts Only:** Yes
**Bypass:**

---

**Type:** PVB
**Size:** 1 1/4
**Manual:** 8
**Approved:** 01-Dec-1993
**Shutoffs:** (dd)
**Manufacturer:** Apollo/Conbraco
**Orientation:** VUH
**0.25% Pb:** No
**Renewed:** 01-Dec-2017
**Model:** 4050602
**Meters:**
**Spare Parts Only:** Yes
**Bypass:**

**Type:** PVB
**Manufacturer:** Apollo/Conbraco
**Model:** 4050702
**Size:** 1 1/2
**Orientation:** VUH
**Meters:**
**Manual:** 8
**0.25% Pb:** No
**Spare Parts Only:** Yes
**Approved:** 01-Dec-1993
**Renewed:** 01-Dec-2017
**Bypass:**
**Shutoffs:** (dd)

---

**Type:** PVB
**Manufacturer:** Apollo/Conbraco
**Model:** 4050802
**Size:** 2
**Orientation:** VUH
**Meters:**
**Manual:** 8
**0.25% Pb:** No
**Spare Parts Only:** Yes
**Approved:** 01-Dec-1993
**Renewed:** 01-Dec-2017
**Bypass:**
**Shutoffs:** (dd)

---

**Type:** PVB
**Manufacturer:** Apollo/Conbraco
**Model:** PVB
**Size:** 1/2
**Orientation:**
**Meters:**
**Manual:**
**0.25% Pb:** No
**Spare Parts Only:** No
**Approved:**
**Renewed:**
**Bypass:**
**Notes:** model designation changed to PVB4V

---

**Type:** PVB
**Manufacturer:** Apollo/Conbraco
**Model:** PVB
**Size:** 3/4
**Orientation:**
**Meters:**
**Manual:**
**0.25% Pb:** No
**Spare Parts Only:** No
**Approved:**
**Renewed:**
**Bypass:**
**Notes:** model designation changed to PVB4V

---

**Type:** PVB
**Manufacturer:** Apollo/Conbraco
**Model:** PVB
**Size:** 1
**Orientation:**
**Meters:**
**Manual:**
**0.25% Pb:** No
**Spare Parts Only:** No
**Approved:**
**Renewed:**
**Bypass:**
**Notes:** model designation changed to PVB4V

---

**Type:** PVB
**Manufacturer:** Apollo/Conbraco
**Model:** PVB
**Size:** 1 1/4
**Orientation:**
**Meters:**
**Manual:**
**0.25% Pb:** No
**Spare Parts Only:** No
**Approved:**
**Renewed:**
**Bypass:**
**Notes:** model designation changed to PVB4V

---

**Type:** PVB
**Manufacturer:** Apollo/Conbraco
**Model:** PVB
**Size:** 1 1/2
**Orientation:**
**Meters:**
**Manual:**
**0.25% Pb:** No
**Spare Parts Only:** No
**Approved:**
**Renewed:**
**Bypass:**
**Notes:** model designation changed to PVB4V


2018 © University of Southern California

**Type:** PVB
**Manufacturer:** Apollo/Conbraco
**Model:** PVB
**Size:** 2
**Orientation:**
**Meters:**
**Manual:**
**0.25% Pb:** No
**Spare Parts Only:** No
**Approved:**
**Renewed:**
**Bypass:**
**Notes:** model designation changed to PVB4V

---

**Type:** PVB
**Manufacturer:** Apollo/Conbraco
**Model:** PVB4A
**Size:** 1/2
**Orientation:** VUH
**Meters:**
**Manual:** 9
**0.25% Pb:** No
**Spare Parts Only:** No
**Approved:** 18-Nov-2010
**Renewed:** 18-Nov-2016
**Bypass:**
**Shutoffs:** (iiiii),sssss

---

**Type:** PVB
**Manufacturer:** Apollo/Conbraco
**Model:** PVB4A
**Size:** 3/4
**Orientation:** VUH
**Meters:**
**Manual:** 9
**0.25% Pb:** No
**Spare Parts Only:** No
**Approved:** 18-Nov-2010
**Renewed:** 18-Nov-2016
**Bypass:**
**Shutoffs:** (iiiii),sssss

---

**Type:** PVB
**Manufacturer:** Apollo/Conbraco
**Model:** PVB4A
**Size:** 1
**Orientation:** VUH
**Meters:**
**Manual:** 9
**0.25% Pb:** No
**Spare Parts Only:** No
**Approved:** 18-Nov-2010
**Renewed:** 18-Nov-2016
**Bypass:**
**Shutoffs:** (iiiii),sssss

---

**Type:** PVB
**Manufacturer:** Apollo/Conbraco
**Model:** PVB4A
**Size:** 1 1/4
**Orientation:** VUH
**Meters:**
**Manual:** 9
**0.25% Pb:** No
**Spare Parts Only:** No
**Approved:** 27-Apr-2011
**Renewed:** 27-Apr-2017
**Bypass:**
**Shutoffs:** (iiiii),sssss

---

**Type:** PVB
**Manufacturer:** Apollo/Conbraco
**Model:** PVB4A
**Size:** 1 1/2
**Orientation:** VUH
**Meters:**
**Manual:** 9
**0.25% Pb:** No
**Spare Parts Only:** No
**Approved:** 27-Apr-2011
**Renewed:** 27-Apr-2017
**Bypass:**
**Shutoffs:** (iiiii),sssss

---

**Type:** PVB
**Manufacturer:** Apollo/Conbraco
**Model:** PVB4A
**Size:** 2
**Orientation:** VUH
**Meters:**
**Manual:** 9
**0.25% Pb:** No
**Spare Parts Only:** No
**Approved:** 30-Jan-2012
**Renewed:** 30-Jan-2018
**Bypass:**
**Shutoffs:** (iiiii),sssss

**Type:** PVB
**Size:** 1/2
**Manual:** 9
**Approved:** 23-Sep-1999
**Shutoffs:** (dd)
**Notes:** formerly PVB

**Manufacturer:** Apollo/Conbraco
**Orientation:** VUH
**0.25% Pb:** No
**Renewed:** 23-Sep-2017

**Model:** PVB4V
**Meters:**
**Spare Parts Only:** Yes
**Bypass:**

---

**Type:** PVB
**Size:** 3/4
**Manual:** 9
**Approved:** 23-Sep-1999
**Shutoffs:** (dd)
**Notes:** formerly PVB

**Manufacturer:** Apollo/Conbraco
**Orientation:** VUH
**0.25% Pb:** No
**Renewed:** 23-Sep-2017

**Model:** PVB4V
**Meters:**
**Spare Parts Only:** Yes
**Bypass:**

---

**Type:** PVB
**Size:** 1
**Manual:** 9
**Approved:** 23-Sep-1999
**Shutoffs:** (dd)
**Notes:** formerly PVB

**Manufacturer:** Apollo/Conbraco
**Orientation:** VUH
**0.25% Pb:** No
**Renewed:** 23-Sep-2017

**Model:** PVB4V
**Meters:**
**Spare Parts Only:** Yes
**Bypass:**

---

**Type:** PVB
**Size:** 1 1/4
**Manual:** 9
**Approved:** 07-Oct-2002
**Shutoffs:** (dd)
**Notes:** formerly PVB

**Manufacturer:** Apollo/Conbraco
**Orientation:** VUH
**0.25% Pb:** No
**Renewed:** 07-Oct-2017

**Model:** PVB4V
**Meters:**
**Spare Parts Only:** Yes
**Bypass:**

---

**Type:** PVB
**Size:** 1 1/2
**Manual:** 9
**Approved:** 07-Oct-2002
**Shutoffs:** (dd)
**Notes:** formerly PVB

**Manufacturer:** Apollo/Conbraco
**Orientation:** VUH
**0.25% Pb:** No
**Renewed:** 07-Oct-2017

**Model:** PVB4V
**Meters:**
**Spare Parts Only:** Yes
**Bypass:**

---

**Type:** PVB
**Size:** 2
**Manual:** 9
**Approved:** 18-Jun-2003
**Shutoffs:** (dd)
**Notes:** formerly PVB

**Manufacturer:** Apollo/Conbraco
**Orientation:** VUH
**0.25% Pb:** No
**Renewed:** 18-Jun-2018

**Model:** PVB4V
**Meters:**
**Spare Parts Only:** Yes
**Bypass:**


2018 © University of Southern California

**Type:** PVB
**Size:** 1/2
**Manual:** 10
**Approved:** 06-Sep-2018
**Shutoffs:** (int)
**Manufacturer:** ARI
**Orientation:** VUH
**0.25% Pb:** No
**Renewed:**
**Model:** VB-501
**Meters:**
**Spare Parts Only:** No
**Bypass:**

---

**Type:** PVB
**Size:** 3/4
**Manual:** 10
**Approved:** 13-Jun-2018
**Shutoffs:** (int)
**Manufacturer:** ARI
**Orientation:** VUH
**0.25% Pb:** No
**Renewed:**
**Model:** VB-501
**Meters:**
**Spare Parts Only:** No
**Bypass:**

---

**Type:** PVB
**Size:** 1
**Manual:** 10
**Approved:** 13-Jun-2018
**Shutoffs:** (int)
**Manufacturer:** ARI
**Orientation:** VUH
**0.25% Pb:** No
**Renewed:**
**Model:** VB-501
**Meters:**
**Spare Parts Only:** No
**Bypass:**

---

**Type:** PVB
**Size:**
**Manual:**
**Approved:**
**Notes:** See Apollo/Conbraco
**Manufacturer:** Conbraco
**Orientation:**
**0.25% Pb:** No
**Renewed:**
**Model:**
**Meters:**
**Spare Parts Only:** No
**Bypass:**

---

**Type:** PVB
**Size:** 1/2
**Manual:** 5
**Approved:** 26-Mar-1974
**Shutoffs:** (ii),fff,jjj,ooo
**Manufacturer:** Febco
**Orientation:** VUH
**0.25% Pb:** No
**Renewed:** 01-Jul-2016
**Model:** 765
**Meters:**
**Spare Parts Only:** No
**Bypass:**

---

**Type:** PVB
**Size:** 3/4
**Manual:** 5
**Approved:** 26-Mar-1974
**Shutoffs:** (ii),fff,jjj,ooo,xxx
**Manufacturer:** Febco
**Orientation:** VUH
**0.25% Pb:** No
**Renewed:** 01-Jul-2016
**Model:** 765
**Meters:**
**Spare Parts Only:** No
**Bypass:**

---

**Type:** PVB
**Size:** 1
**Manual:** 5
**Approved:** 26-Mar-1974
**Shutoffs:** (ii),fff,jjj,ooo,xxx
**Manufacturer:** Febco
**Orientation:** VUH
**0.25% Pb:** No
**Renewed:** 01-Jul-2016
**Model:** 765
**Meters:**
**Spare Parts Only:** No
**Bypass:**

**Type:** PVB
**Size:** 1 1/4
**Manual:** 5
**Approved:** 26-Mar-1974
**Shutoffs:** (ii),fff,jjj,ooo
**Manufacturer:** Febco
**Orientation:** VUH
**0.25% Pb:** No
**Renewed:** 01-Jul-2016
**Model:** 765
**Meters:**
**Spare Parts Only:** No
**Bypass:**

---

**Type:** PVB
**Size:** 1 1/2
**Manual:** 5
**Approved:** 26-Mar-1974
**Shutoffs:** (ii),fff,jjj,ooo,xxx
**Manufacturer:** Febco
**Orientation:** VUH
**0.25% Pb:** No
**Renewed:** 01-Jul-2016
**Model:** 765
**Meters:**
**Spare Parts Only:** No
**Bypass:**

---

**Type:** PVB
**Size:** 2
**Manual:** 5
**Approved:** 26-Mar-1974
**Shutoffs:** (ii),fff,ooo,xxx
**Manufacturer:** Febco
**Orientation:** VUH
**0.25% Pb:** No
**Renewed:** 01-Jul-2016
**Model:** 765
**Meters:**
**Spare Parts Only:** No
**Bypass:**

---

**Type:** PVB
**Size:** 1/2
**Manual:** 9
**Approved:** 01-Aug-2006
**Shutoffs:** (vv), xx,pppp,rrrrr
**Manufacturer:** Febco
**Orientation:** VUH
**0.25% Pb:** No
**Renewed:** 01-Aug-2018
**Model:** 767-FR
**Meters:**
**Spare Parts Only:** No
**Bypass:**

---

**Type:** PVB
**Size:** 3/4
**Manual:** 9
**Approved:** 01-Aug-2006
**Shutoffs:** (vv), xx,pppp,rrrrr
**Manufacturer:** Febco
**Orientation:** VUH
**0.25% Pb:** No
**Renewed:** 01-Aug-2018
**Model:** 767-FR
**Meters:**
**Spare Parts Only:** No
**Bypass:**

---

**Type:** PVB
**Size:** 1
**Manual:** 9
**Approved:** 01-Aug-2006
**Shutoffs:** (vv), xx,pppp,rrrrr
**Manufacturer:** Febco
**Orientation:** VUH
**0.25% Pb:** No
**Renewed:** 01-Aug-2018
**Model:** 767-FR
**Meters:**
**Spare Parts Only:** No
**Bypass:**

---

**Type:** PVB
**Size:** 1 1/4
**Manual:** 9
**Approved:** 01-Aug-2006
**Shutoffs:** (vv), xx,pppp,rrrrr
**Manufacturer:** Febco
**Orientation:** VUH
**0.25% Pb:** No
**Renewed:** 01-Aug-2018
**Model:** 767-FR
**Meters:**
**Spare Parts Only:** No
**Bypass:**


2018 © University of Southern California

**Type:** PVB
**Size:** 1 1/2
**Manual:** 9
**Approved:** 01-Aug-2006
**Shutoffs:** (vv), xx,pppp,rrrrr

**Manufacturer:** Febco
**Orientation:** VUH
**0.25% Pb:** No
**Renewed:** 01-Aug-2018

**Model:** 767-FR
**Meters:**
**Spare Parts Only:** No
**Bypass:**

---

**Type:** PVB
**Size:** 2
**Manual:** 9
**Approved:** 01-Aug-2006
**Shutoffs:** (vv), xx,pppp,rrrrr

**Manufacturer:** Febco
**Orientation:** VUH
**0.25% Pb:** No
**Renewed:** 01-Aug-2018

**Model:** 767-FR
**Meters:**
**Spare Parts Only:** No
**Bypass:**

---

**Type:** PVB
**Size:** 1/2
**Manual:** 9
**Approved:** 04-May-2010
**Shutoffs:** (hhhh),rrrrr

**Manufacturer:** Febco
**Orientation:** VUH
**0.25% Pb:** Yes
**Renewed:** 04-May-2016

**Model:** LF767FR
**Meters:**
**Spare Parts Only:** No
**Bypass:**

---

**Type:** PVB
**Size:** 3/4
**Manual:** 9
**Approved:** 04-May-2010
**Shutoffs:** (hhhh),rrrrr

**Manufacturer:** Febco
**Orientation:** VUH
**0.25% Pb:** Yes
**Renewed:** 04-May-2016

**Model:** LF767FR
**Meters:**
**Spare Parts Only:** No
**Bypass:**

---

**Type:** PVB
**Size:** 1
**Manual:** 9
**Approved:** 04-May-2010
**Shutoffs:** (hhhh),rrrrr

**Manufacturer:** Febco
**Orientation:** VUH
**0.25% Pb:** Yes
**Renewed:** 04-May-2016

**Model:** LF767FR
**Meters:**
**Spare Parts Only:** No
**Bypass:**

---

**Type:** PVB
**Size:** 1 1/4
**Manual:** 9
**Approved:** 04-May-2010
**Shutoffs:** (hhhh),rrrrr

**Manufacturer:** Febco
**Orientation:** VUH
**0.25% Pb:** Yes
**Renewed:** 04-May-2016

**Model:** LF767FR
**Meters:**
**Spare Parts Only:** No
**Bypass:**

---

**Type:** PVB
**Size:** 1 1/2
**Manual:** 9
**Approved:** 04-May-2010
**Shutoffs:** (hhhh),rrrrr

**Manufacturer:** Febco
**Orientation:** VUH
**0.25% Pb:** Yes
**Renewed:** 04-May-2016

**Model:** LF767FR
**Meters:**
**Spare Parts Only:** No
**Bypass:**

**Type:** PVB
**Size:** 2
**Manual:** 9
**Approved:** 04-May-2010
**Shutoffs:** (hhhh),rrrrr

**Manufacturer:** Febco
**Orientation:** VUH
**0.25% Pb:** Yes
**Renewed:** 04-May-2016

**Model:** LF767FR
**Meters:**
**Spare Parts Only:** No
**Bypass:**

---

**Type:** PVB
**Size:**
**Manual:**
**Approved:**
**Notes:** See Wilkins

**Manufacturer:** Neptune
**Orientation:**
**0.25% Pb:** No
**Renewed:**

**Model:**
**Meters:**
**Spare Parts Only:** No
**Bypass:**

---

**Type:** PVB
**Size:** 1/2
**Manual:** 8
**Approved:** 18-Jul-1989
**Shutoffs:** vv,xx,ooo,hhhh,pppp

**Manufacturer:** Watts
**Orientation:** VUH
**0.25% Pb:** No
**Renewed:** 18-Jul-2016

**Model:** 800CMQT
**Meters:**
**Spare Parts Only:** Yes
**Bypass:**

---

**Type:** PVB
**Size:** 3/4
**Manual:** 8
**Approved:** 18-Jul-1989
**Shutoffs:** vv,xx,ooo,hhhh,pppp

**Manufacturer:** Watts
**Orientation:** VUH
**0.25% Pb:** No
**Renewed:** 18-Jul-2016

**Model:** 800CMQT
**Meters:**
**Spare Parts Only:** Yes
**Bypass:**

---

**Type:** PVB
**Size:** 1/2
**Manual:** 8
**Approved:** 09-Jul-1991
**Shutoffs:** vv,xx,ooo,hhhh,pppp

**Manufacturer:** Watts
**Orientation:** VUH
**0.25% Pb:** No
**Renewed:** 09-Jul-2018

**Model:** 800M2QT
**Meters:**
**Spare Parts Only:** Yes
**Bypass:**

---

**Type:** PVB
**Size:** 3/4
**Manual:** 8
**Approved:** 09-Jul-1991
**Shutoffs:** vv,xx,ooo,hhhh,pppp

**Manufacturer:** Watts
**Orientation:** VUH
**0.25% Pb:** No
**Renewed:** 09-Jul-2018

**Model:** 800M2QT
**Meters:**
**Spare Parts Only:** Yes
**Bypass:**

---

**Type:** PVB
**Size:** 1
**Manual:** 8
**Approved:** 09-Jul-1991
**Shutoffs:** vv,xx,ooo,hhhh,pppp

**Manufacturer:** Watts
**Orientation:** VUH
**0.25% Pb:** No
**Renewed:** 09-Jul-2018

**Model:** 800M2QT
**Meters:**
**Spare Parts Only:** Yes
**Bypass:**


2018 © University of Southern California

**Type:** PVB
**Size:** 1 1/4
**Manual:** 8
**Approved:** 25-Mar-1993
**Shutoffs:** vv,xx,ooo,hhhh,pppp
**Manufacturer:** Watts
**Orientation:** VUH
**0.25% Pb:** No
**Renewed:** 25-Mar-2017
**Model:** 800M2QT
**Meters:**
**Spare Parts Only:** Yes
**Bypass:**

---

**Type:** PVB
**Size:** 1 1/2
**Manual:** 8
**Approved:** 25-Mar-1993
**Shutoffs:** vv,xx,ooo,hhhh,pppp
**Manufacturer:** Watts
**Orientation:** VUH
**0.25% Pb:** No
**Renewed:** 25-Mar-2017
**Model:** 800M2QT
**Meters:**
**Spare Parts Only:** Yes
**Bypass:**

---

**Type:** PVB
**Size:** 2
**Manual:** 8
**Approved:** 25-Mar-1993
**Shutoffs:** vv,xx,ooo,hhhh,pppp
**Manufacturer:** Watts
**Orientation:** VUH
**0.25% Pb:** No
**Renewed:** 25-Mar-2017
**Model:** 800M2QT
**Meters:**
**Spare Parts Only:** Yes
**Bypass:**

---

**Type:** PVB
**Size:** 1/2
**Manual:** 8
**Approved:** 24-Feb-1992
**Shutoffs:** vv,xx,ooo,hhhh,pppp
**Manufacturer:** Watts
**Orientation:** VUH
**0.25% Pb:** No
**Renewed:** 24-Feb-2016
**Model:** 800M3QT
**Meters:**
**Spare Parts Only:** Yes
**Bypass:**

---

**Type:** PVB
**Size:** 3/4
**Manual:** 8
**Approved:** 24-Feb-1992
**Shutoffs:** vv,xx,ooo,hhhh,pppp
**Manufacturer:** Watts
**Orientation:** VUH
**0.25% Pb:** No
**Renewed:** 24-Feb-2016
**Model:** 800M3QT
**Meters:**
**Spare Parts Only:** Yes
**Bypass:**

---

**Type:** PVB
**Size:** 1/2
**Manual:** 9
**Approved:** 12-May-1998
**Shutoffs:** (vv),xx,ooo,hhhh,pppp,rrrrr
**Manufacturer:** Watts
**Orientation:** VUH
**0.25% Pb:** No
**Renewed:** 12-May-2016
**Model:** 800M4FR
**Meters:**
**Spare Parts Only:** No
**Bypass:**

---

**Type:** PVB
**Size:** 3/4
**Manual:** 9
**Approved:** 12-May-1998
**Shutoffs:** (vv),xx,ooo,hhhh,pppp,rrrrr
**Manufacturer:** Watts
**Orientation:** VUH
**0.25% Pb:** No
**Renewed:** 12-May-2016
**Model:** 800M4FR
**Meters:**
**Spare Parts Only:** No
**Bypass:**

**Type:** PVB
**Size:** 1
**Manual:** 9
**Approved:** 01-Sep-1995
**Shutoffs:** (vv),xx,ooo,hhhh,pppp,rrrrr
**Manufacturer:** Watts
**Orientation:** VUH
**0.25% Pb:** No
**Renewed:** 01-Sep-2016
**Model:** 800M4FR
**Meters:**
**Spare Parts Only:** No
**Bypass:**

---

**Type:** PVB
**Size:** 1 1/4
**Manual:** 9
**Approved:** 13-May-1997
**Shutoffs:** (vv),xx,ooo,hhhh,pppp,rrrrr
**Manufacturer:** Watts
**Orientation:** VUH
**0.25% Pb:** No
**Renewed:** 13-May-2018
**Model:** 800M4FR
**Meters:**
**Spare Parts Only:** No
**Bypass:**

---

**Type:** PVB
**Size:** 1 1/2
**Manual:** 9
**Approved:** 13-May-1997
**Shutoffs:** (vv),xx,ooo,hhhh,pppp,rrrrr
**Manufacturer:** Watts
**Orientation:** VUH
**0.25% Pb:** No
**Renewed:** 13-May-2018
**Model:** 800M4FR
**Meters:**
**Spare Parts Only:** No
**Bypass:**

---

**Type:** PVB
**Size:** 2
**Manual:** 9
**Approved:** 13-May-1997
**Shutoffs:** (vv),xx,ooo,hhhh,pppp,rrrrr
**Manufacturer:** Watts
**Orientation:** VUH
**0.25% Pb:** No
**Renewed:** 13-May-2018
**Model:** 800M4FR
**Meters:**
**Spare Parts Only:** No
**Bypass:**

---

**Type:** PVB
**Size:** 1/2
**Manual:** 8
**Approved:** 06-Sep-1993
**Shutoffs:** (vv),xx,ooo,hhhh,pppp,rrrrr
**Manufacturer:** Watts
**Orientation:** VUH
**0.25% Pb:** No
**Renewed:** 06-Sep-2017
**Model:** 800M4QT
**Meters:**
**Spare Parts Only:** No
**Bypass:**

---

**Type:** PVB
**Size:** 3/4
**Manual:** 8
**Approved:** 06-Apr-1993
**Shutoffs:** (vv),xx,ooo,hhhh,pppp,rrrrr
**Manufacturer:** Watts
**Orientation:** VUH
**0.25% Pb:** No
**Renewed:** 06-Apr-2017
**Model:** 800M4QT
**Meters:**
**Spare Parts Only:** No
**Bypass:**

---

**Type:** PVB
**Size:** 1
**Manual:** 8
**Approved:** 25-May-1993
**Shutoffs:** (vv),xx,ooo,hhhh,pppp,rrrrr
**Manufacturer:** Watts
**Orientation:** VUH
**0.25% Pb:** No
**Renewed:** 25-May-2017
**Model:** 800M4QT
**Meters:**
**Spare Parts Only:** No
**Bypass:**


2018 © University of Southern California

**Type:** PVB
**Size:** 1 1/4
**Manual:** 8
**Approved:** 24-May-1994
**Shutoffs:** (vv),xx,ooo,hhhh,pppp,rrrrr
**Manufacturer:** Watts
**Orientation:** VUH
**0.25% Pb:** No
**Renewed:** 24-May-2018
**Model:** 800M4QT
**Meters:**
**Spare Parts Only:** No
**Bypass:**

---

**Type:** PVB
**Size:** 1 1/2
**Manual:** 8
**Approved:** 21-Jun-1993
**Shutoffs:** (vv),xx,ooo,hhhh,pppp,rrrrr
**Manufacturer:** Watts
**Orientation:** VUH
**0.25% Pb:** No
**Renewed:** 21-Jun-2017
**Model:** 800M4QT
**Meters:**
**Spare Parts Only:** No
**Bypass:**

---

**Type:** PVB
**Size:** 2
**Manual:** 8
**Approved:** 21-Jun-1993
**Shutoffs:** (vv),xx,ooo,hhhh,pppp,rrrrr
**Manufacturer:** Watts
**Orientation:** VUH
**0.25% Pb:** No
**Renewed:** 21-Jun-2017
**Model:** 800M4QT
**Meters:**
**Spare Parts Only:** No
**Bypass:**

---

**Type:** PVB
**Size:** 1/2
**Manual:** 8
**Approved:** 18-Jul-1989
**Shutoffs:** vv,xx,ooo,hhhh,pppp
**Manufacturer:** Watts
**Orientation:** VUH
**0.25% Pb:** No
**Renewed:** 18-Jul-2016
**Model:** 800MQT
**Meters:**
**Spare Parts Only:** Yes
**Bypass:**

---

**Type:** PVB
**Size:** 3/4
**Manual:** 8
**Approved:** 18-Jul-1989
**Shutoffs:** vv,xx,ooo,hhhh,pppp
**Manufacturer:** Watts
**Orientation:** VUH
**0.25% Pb:** No
**Renewed:** 18-Jul-2016
**Model:** 800MQT
**Meters:**
**Spare Parts Only:** Yes
**Bypass:**

---

**Type:** PVB
**Size:** 3/4
**Manual:** 5
**Approved:** 14-Feb-1978
**Shutoffs:** vv,xx,ooo,hhhh,pppp
**Manufacturer:** Watts
**Orientation:** VUH
**0.25% Pb:** No
**Renewed:** 14-Feb-2017
**Model:** 800QT
**Meters:**
**Spare Parts Only:** Yes
**Bypass:**

---

**Type:** PVB
**Size:** 1
**Manual:** 5
**Approved:** 14-Feb-1978
**Shutoffs:** vv,xx,ooo,hhhh,pppp
**Manufacturer:** Watts
**Orientation:** VUH
**0.25% Pb:** No
**Renewed:** 14-Feb-2017
**Model:** 800QT
**Meters:**
**Spare Parts Only:** Yes
**Bypass:**

**Type:** PVB
**Size:** 1 1/4
**Manual:** 5
**Approved:** 14-Feb-1978
**Shutoffs:** vv,xx,ooo,hhhh,pppp
**Manufacturer:** Watts
**Orientation:** VUH
**0.25% Pb:** No
**Renewed:** 14-Feb-2017
**Model:** 800QT
**Meters:**
**Spare Parts Only:** Yes
**Bypass:**

---

**Type:** PVB
**Size:** 1 1/2
**Manual:** 5
**Approved:** 14-Feb-1978
**Shutoffs:** vv,xx,ooo,hhhh,pppp
**Manufacturer:** Watts
**Orientation:** VUH
**0.25% Pb:** No
**Renewed:** 14-Feb-2017
**Model:** 800QT
**Meters:**
**Spare Parts Only:** Yes
**Bypass:**

---

**Type:** PVB
**Size:** 2
**Manual:** 5
**Approved:** 14-Feb-1978
**Shutoffs:** vv,xx,ooo,hhhh,pppp
**Manufacturer:** Watts
**Orientation:** VUH
**0.25% Pb:** No
**Renewed:** 14-Feb-2017
**Model:** 800QT
**Meters:**
**Spare Parts Only:** Yes
**Bypass:**

---

**Type:** PVB
**Size:** 1/2
**Manual:** 9
**Approved:** 12-Jan-2010
**Shutoffs:** (hhhh),rrrrr
**Manufacturer:** Watts
**Orientation:** VUH
**0.25% Pb:** Yes
**Renewed:** 12-Jan-2016
**Model:** LF800M4FR
**Meters:**
**Spare Parts Only:** No
**Bypass:**

---

**Type:** PVB
**Size:** 3/4
**Manual:** 9
**Approved:** 12-Jan-2010
**Shutoffs:** (hhhh),rrrrr
**Manufacturer:** Watts
**Orientation:** VUH
**0.25% Pb:** Yes
**Renewed:** 12-Jan-2016
**Model:** LF800M4FR
**Meters:**
**Spare Parts Only:** No
**Bypass:**

---

**Type:** PVB
**Size:** 1
**Manual:** 9
**Approved:** 05-Dec-2014
**Shutoffs:** (hhhh),rrrrr
**Manufacturer:** Watts
**Orientation:** VUH
**0.25% Pb:** Yes
**Renewed:** 05-Dec-2017
**Model:** LF800M4FR
**Meters:**
**Spare Parts Only:** No
**Bypass:**

---

**Type:** PVB
**Size:** 1 1/4
**Manual:** 9
**Approved:** 12-Jan-2010
**Shutoffs:** (hhhh),rrrrr
**Manufacturer:** Watts
**Orientation:** VUH
**0.25% Pb:** Yes
**Renewed:** 12-Jan-2016
**Model:** LF800M4FR
**Meters:**
**Spare Parts Only:** No
**Bypass:**


2018 © University of Southern California

**Type:** PVB
**Size:** 1 1/2
**Manual:** 9
**Approved:** 12-Jan-2010
**Shutoffs:** (hhhh),rrrrr
**Manufacturer:** Watts
**Orientation:** VUH
**0.25% Pb:** Yes
**Renewed:** 12-Jan-2016
**Model:** LF800M4FR
**Meters:**
**Spare Parts Only:** No
**Bypass:**

---

**Type:** PVB
**Size:** 2
**Manual:** 9
**Approved:** 12-Jan-2010
**Shutoffs:** (hhhh),rrrrr
**Manufacturer:** Watts
**Orientation:** VUH
**0.25% Pb:** Yes
**Renewed:** 12-Jan-2016
**Model:** LF800M4FR
**Meters:**
**Spare Parts Only:** No
**Bypass:**

---

**Type:** PVB
**Size:** 1/2
**Manual:** 9
**Approved:** 12-Jan-2010
**Shutoffs:** (hhhh),rrrrr
**Manufacturer:** Watts
**Orientation:** VUH
**0.25% Pb:** Yes
**Renewed:** 12-Jan-2016
**Model:** LF800M4QT
**Meters:**
**Spare Parts Only:** No
**Bypass:**

---

**Type:** PVB
**Size:** 3/4
**Manual:** 9
**Approved:** 12-Jan-2010
**Shutoffs:** (hhhh),rrrrr
**Manufacturer:** Watts
**Orientation:** VUH
**0.25% Pb:** Yes
**Renewed:** 12-Jan-2016
**Model:** LF800M4QT
**Meters:**
**Spare Parts Only:** No
**Bypass:**

---

**Type:** PVB
**Size:** 1
**Manual:** 9
**Approved:** 05-Dec-2014
**Shutoffs:** (hhhh),rrrrr
**Manufacturer:** Watts
**Orientation:** VUH
**0.25% Pb:** Yes
**Renewed:** 05-Dec-2017
**Model:** LF800M4QT
**Meters:**
**Spare Parts Only:** No
**Bypass:**

---

**Type:** PVB
**Size:** 1 1/4
**Manual:** 9
**Approved:** 12-Jan-2010
**Shutoffs:** (hhhh),rrrrr
**Manufacturer:** Watts
**Orientation:** VUH
**0.25% Pb:** Yes
**Renewed:** 12-Jan-2016
**Model:** LF800M4QT
**Meters:**
**Spare Parts Only:** No
**Bypass:**

---

**Type:** PVB
**Size:** 1 1/2
**Manual:** 9
**Approved:** 12-Jan-2010
**Shutoffs:** (hhhh),rrrrr
**Manufacturer:** Watts
**Orientation:** VUH
**0.25% Pb:** Yes
**Renewed:** 12-Jan-2016
**Model:** LF800M4QT
**Meters:**
**Spare Parts Only:** No
**Bypass:**

**Type:** PVB
**Manufacturer:** Watts
**Model:** LF800M4QT
**Size:** 2
**Orientation:** VUH
**Meters:**
**Manual:** 9
**0.25% Pb:** Yes
**Spare Parts Only:** No
**Approved:** 12-Jan-2010
**Renewed:** 12-Jan-2016
**Bypass:**
**Shutoffs:** (hhhh),rrrrr

---

**Type:** PVB
**Manufacturer:** Wilkins
**Model:** 420
**Size:** 1/2
**Orientation:** VUH
**Meters:**
**Manual:** 9
**0.25% Pb:** No
**Spare Parts Only:** No
**Approved:** 17-Jul-1999
**Renewed:** 10-Jul-2017
**Bypass:**
**Shutoffs:** (ii),ooo

---

**Type:** PVB
**Manufacturer:** Wilkins
**Model:** 420
**Size:** 3/4
**Orientation:** VUH
**Meters:**
**Manual:** 9
**0.25% Pb:** No
**Spare Parts Only:** No
**Approved:** 17-Jul-1999
**Renewed:** 10-Jul-2017
**Bypass:**
**Shutoffs:** (ii),ooo

---

**Type:** PVB
**Manufacturer:** Wilkins
**Model:** 420
**Size:** 1
**Orientation:** VUH
**Meters:**
**Manual:** 9
**0.25% Pb:** No
**Spare Parts Only:** No
**Approved:** 29-Sep-2000
**Renewed:** 29-Sep-2018
**Bypass:**
**Shutoffs:** (ii),ooo

---

**Type:** PVB
**Manufacturer:** Wilkins
**Model:** 420XL
**Size:** 1/2
**Orientation:** VUH
**Meters:**
**Manual:** 9
**0.25% Pb:** Yes
**Spare Parts Only:** No
**Approved:** 21-Mar-2011
**Renewed:** 21-Mar-2017
**Bypass:**
**Shutoffs:** (iiii)
**Notes:** Testcocks: Female Threaded End or 45 degree male SAE flare

---

**Type:** PVB
**Manufacturer:** Wilkins
**Model:** 420XL
**Size:** 3/4
**Orientation:** VUH
**Meters:**
**Manual:** 9
**0.25% Pb:** Yes
**Spare Parts Only:** No
**Approved:** 21-Mar-2011
**Renewed:** 21-Mar-2017
**Bypass:**
**Shutoffs:** (iiii)
**Notes:** Testcocks: Female Threaded End or 45 degree male SAE flare


2018 © University of Southern California

**Type:** PVB
**Manufacturer:** Wilkins
**Model:** 420XL
**Size:** 1
**Orientation:** VUH
**Meters:**
**Manual:** 9
**0.25% Pb:** Yes
**Spare Parts Only:** Yes
**Approved:** 03-Aug-2011
**Renewed:** 03-Aug-2017
**Bypass:**
**Shutoffs:** (iiii)
**Notes:** Testcocks: Female Threaded End or 45 degree male SAE flare

---

**Type:** PVB
**Manufacturer:** Wilkins
**Model:** 720A
**Size:** 1/2
**Orientation:** VUH
**Meters:**
**Manual:** 5
**0.25% Pb:** No
**Spare Parts Only:** No
**Approved:** 28-Aug-1978
**Renewed:** 28-Aug-2017
**Bypass:**
**Shutoffs:** (ii),ooo
**Notes:** Beginning with Serial No. T00001 the test cocks were moved from the body to the shutoff valves. Testcocks: Female Threaded End or 45 degree male SAE flare.

---

**Type:** PVB
**Manufacturer:** Wilkins
**Model:** 720A
**Size:** 3/4
**Orientation:** VUH
**Meters:**
**Manual:** 5
**0.25% Pb:** No
**Spare Parts Only:** No
**Approved:** 28-Aug-1978
**Renewed:** 28-Aug-2017
**Bypass:**
**Shutoffs:** (ii),ooo
**Notes:** Beginning with Serial No. T00001 the test cocks were moved from the body to the shutoff valves. Testcocks: Female Threaded End or 45 degree male SAE flare.

---

**Type:** PVB
**Manufacturer:** Wilkins
**Model:** 720A
**Size:** 1
**Orientation:** VUH
**Meters:**
**Manual:** 5
**0.25% Pb:** No
**Spare Parts Only:** No
**Approved:** 28-Aug-1978
**Renewed:** 28-Aug-2017
**Bypass:**
**Shutoffs:** (ii),ooo
**Notes:** Beginning with Serial No. T00001 the test cocks were moved from the body to the shutoff valves. Testcocks: Female Threaded End or 45 degree male SAE flare.

---

**Type:** PVB
**Manufacturer:** Wilkins
**Model:** 720A
**Size:** 1 1/4
**Orientation:** VUH
**Meters:**
**Manual:** 5
**0.25% Pb:** No
**Spare Parts Only:** No
**Approved:** 28-Aug-1978
**Renewed:** 28-Aug-2017
**Bypass:**
**Shutoffs:** (ii),ooo
**Notes:** Beginning with Serial No. T00001 the test cocks were moved from the body to the shutoff valves.

**Type:** PVB
**Manufacturer:** Wilkins
**Model:** 720A
**Size:** 1 1/2
**Orientation:** VUH
**Meters:**
**Manual:** 5
**0.25% Pb:** No
**Spare Parts Only:** No
**Approved:** 28-Aug-1978
**Renewed:** 28-Aug-2017
**Bypass:**
**Shutoffs:** (ii),ooo
**Notes:** Beginning with Serial No. T00001 the test cocks were moved from the body to the shutoff valves.

---

**Type:** PVB
**Manufacturer:** Wilkins
**Model:** 720A
**Size:** 2
**Orientation:** VUH
**Meters:**
**Manual:** 5
**0.25% Pb:** No
**Spare Parts Only:** No
**Approved:** 28-Aug-1978
**Renewed:** 28-Aug-2017
**Bypass:**
**Shutoffs:** (ii),ooo
**Notes:** Beginning with Serial No. T00001 the test cocks were moved from the body to the shutoff valves.

---

**Type:** RP
**Manufacturer:** Ames
**Model:** 4000B
**Size:** 1/2
**Orientation:** H
**Meters:**
**Manual:** 9
**0.25% Pb:** No
**Spare Parts Only:** No
**Approved:** 10-Sep-1996
**Renewed:** 10-Sep-2017
**Bypass:**
**Shutoffs:** (vv),xx,ooo,hhhh,pppp,rrrrr
**Notes:** Previously Approved 8th Ed. (26 May 1993)

---

**Type:** RP
**Manufacturer:** Ames
**Model:** 4000B
**Size:** 3/4
**Orientation:** H
**Meters:**
**Manual:** 8
**0.25% Pb:** No
**Spare Parts Only:** No
**Approved:** 31-Oct-1992
**Renewed:** 31-Oct-2016
**Bypass:**
**Shutoffs:** (vv),xx,ooo,hhhh,pppp,rrrrr

---

**Type:** RP
**Manufacturer:** Ames
**Model:** 4000B
**Size:** 1
**Orientation:** H
**Meters:**
**Manual:** 7
**0.25% Pb:** No
**Spare Parts Only:** No
**Approved:** 11-Jan-1988
**Renewed:** 11-Jan-2018
**Bypass:**
**Shutoffs:** (vv),xx,ooo,hhhh,pppp,rrrrr

---

**Type:** RP
**Manufacturer:** Ames
**Model:** 4000B
**Size:** 1 1/4
**Orientation:** H
**Meters:**
**Manual:** 8
**0.25% Pb:** No
**Spare Parts Only:** No
**Approved:** 24-Aug-1993
**Renewed:** 24-Aug-2017
**Bypass:**
**Shutoffs:** (vv),xx,ooo,hhhh,pppp,rrrrr


2018 © University of Southern California

**Type:** RP
**Manufacturer:** Ames
**Model:** 4000B
**Size:** 1 1/2
**Orientation:** H
**Meters:**
**Manual:** 8
**0.25% Pb:** No
**Spare Parts Only:** No
**Approved:** 24-Aug-1993
**Renewed:** 24-Aug-2017
**Bypass:**
**Shutoffs:** (vv),xx,ooo,hhhh,pppp,rrrrr

---

**Type:** RP
**Manufacturer:** Ames
**Model:** 4000B
**Size:** 2
**Orientation:** H
**Meters:**
**Manual:** 9
**0.25% Pb:** No
**Spare Parts Only:** No
**Approved:** 10-Sep-1996
**Renewed:** 10-Sep-2017
**Bypass:**
**Shutoffs:** (vv),xx,ooo,hhhh,pppp,rrrrr

---

**Type:** RP
**Manufacturer:** Ames
**Model:** 4000B-FP
**Size:** 3/4
**Orientation:** H
**Meters:**
**Manual:** 9
**0.25% Pb:** No
**Spare Parts Only:** Yes
**Approved:** 01-Sep-2009
**Renewed:** 01-Sep-2018
**Bypass:**
**Shutoffs:** (eeeee)

---

**Type:** RP
**Manufacturer:** Ames
**Model:** 4000B-FP
**Size:** 1
**Orientation:** H
**Meters:**
**Manual:** 9
**0.25% Pb:** No
**Spare Parts Only:** Yes
**Approved:** 01-Sep-2009
**Renewed:** 01-Sep-2018
**Bypass:**
**Shutoffs:** (eeeee)

---

**Type:** RP
**Manufacturer:** Ames
**Model:** 4000B-FP
**Size:** 1 1/4
**Orientation:** H
**Meters:**
**Manual:** 9
**0.25% Pb:** No
**Spare Parts Only:** No
**Approved:** 01-Sep-2009
**Renewed:** 01-Sep-2018
**Bypass:**
**Shutoffs:** (eeeee)
**Notes:** Model Designation Changed to 4000BM2-FP

---

**Type:** RP
**Manufacturer:** Ames
**Model:** 4000B-FP
**Size:** 1 1/2
**Orientation:** H
**Meters:**
**Manual:** 9
**0.25% Pb:** No
**Spare Parts Only:** No
**Approved:** 01-Sep-2009
**Renewed:** 01-Sep-2018
**Bypass:**
**Shutoffs:** (eeeee)
**Notes:** Model Designation Changed to 4000BM2-FP

**Type:** RP
**Manufacturer:** Ames
**Model:** 4000B-FP
**Size:** 2
**Orientation:** H
**Meters:**
**Manual:** 9
**0.25% Pb:** No
**Spare Parts Only:** No
**Approved:** 01-Sep-2009
**Renewed:** 01-Sep-2018
**Bypass:**
**Shutoffs:** (eeeee)
**Notes:** Model Designation Changed to 4000BM2-FP

---

**Type:** RP
**Manufacturer:** Ames
**Model:** 4000BM2
**Size:** 1
**Orientation:** H
**Meters:**
**Manual:** 9
**0.25% Pb:** No
**Spare Parts Only:** No
**Approved:** 18-May-1998
**Renewed:** 18-May-2016
**Bypass:**
**Shutoffs:** (vv),xx,ooo,hhhh,pppp,rrrrr

---

**Type:** RP
**Manufacturer:** Ames
**Model:** 4000BM2-FP
**Size:** 1
**Orientation:** H
**Meters:**
**Manual:** 9
**0.25% Pb:** No
**Spare Parts Only:** No
**Approved:** 01-Sep-2009
**Renewed:** 01-Sep-2018
**Bypass:**
**Shutoffs:** (eeeee),uuuuuu

---

**Type:** RP
**Manufacturer:** Ames
**Model:** 4000BM2-FP
**Size:** 1 1/4
**Orientation:** H
**Meters:**
**Manual:** 9
**0.25% Pb:** No
**Spare Parts Only:** No
**Approved:** 15-Mar-2018
**Renewed:**
**Bypass:**
**Shutoffs:** (eeeee),uuuuuu
**Notes:** formerly Mod 4000B-FP

---

**Type:** RP
**Manufacturer:** Ames
**Model:** 4000BM2-FP
**Size:** 1 1/2
**Orientation:** H
**Meters:**
**Manual:** 9
**0.25% Pb:** No
**Spare Parts Only:** No
**Approved:** 15-Mar-2018
**Renewed:**
**Bypass:**
**Shutoffs:** (eeeee),uuuuuu
**Notes:** formerly Mod 4000B-FP

---

**Type:** RP
**Manufacturer:** Ames
**Model:** 4000BM2-FP
**Size:** 2
**Orientation:** H
**Meters:**
**Manual:** 9
**0.25% Pb:** No
**Spare Parts Only:** No
**Approved:** 15-Mar-2018
**Renewed:**
**Bypass:**
**Shutoffs:** (eeeee),uuuuuu
**Notes:** formerly Mod 4000B-FP


2018 © University of Southern California

**Type:** RP
**Size:** 3/4
**Manual:** 9
**Approved:** 27-Mar-2000
**Shutoffs:** (vv),xx,ooo,hhhh,pppp,rrrrr

**Manufacturer:** Ames
**Orientation:** H
**0.25% Pb:** No
**Renewed:** 27-Mar-2018

**Model:** 4000BM3
**Meters:**
**Spare Parts Only:** No
**Bypass:**

---

**Type:** RP
**Size:** 3/4
**Manual:** 9
**Approved:** 01-Sep-2009
**Shutoffs:** (eeeee)

**Manufacturer:** Ames
**Orientation:** H
**0.25% Pb:** No
**Renewed:** 01-Sep-2018

**Model:** 4000BM3-FP
**Meters:**
**Spare Parts Only:** Yes
**Bypass:**

---

**Type:** RP
**Size:** 2 1/2
**Manual:** 7
**Approved:** 07-Jul-2000
**Shutoffs:** (oo),gg,hh,ll,mm,pp,tt,uu

**Manufacturer:** Ames
**Orientation:** H
**0.25% Pb:** No
**Renewed:** 07-Jul-2018

**Model:** 4000CIV
**Meters:**
**Spare Parts Only:** Yes
**Bypass:**

---

**Type:** RP
**Size:** 3
**Manual:** 7
**Approved:** 07-Jul-2000
**Shutoffs:** (oo),gg,hh,ll,mm,pp,tt,uu

**Manufacturer:** Ames
**Orientation:** H
**0.25% Pb:** No
**Renewed:** 07-Jul-2018

**Model:** 4000CIV
**Meters:**
**Spare Parts Only:** Yes
**Bypass:**

---

**Type:** RP
**Size:** 4
**Manual:** 6
**Approved:** 19-Jun-2000
**Shutoffs:** (oo),gg,hh,ll,mm,pp,tt,uu,eee

**Manufacturer:** Ames
**Orientation:** H
**0.25% Pb:** No
**Renewed:** 19-Jun-2018

**Model:** 4000CIV
**Meters:**
**Spare Parts Only:** Yes
**Bypass:**

---

**Type:** RP
**Size:** 6
**Manual:** 6
**Approved:** 19-Jun-2000
**Shutoffs:** (oo),gg,hh,ll,mm,pp,tt,uu,eee

**Manufacturer:** Ames
**Orientation:** H
**0.25% Pb:** No
**Renewed:** 19-Jun-2018

**Model:** 4000CIV
**Meters:**
**Spare Parts Only:** Yes
**Bypass:**

---

**Type:** RP
**Size:** 8
**Manual:** 8
**Approved:** 19-Jun-2000
**Shutoffs:** (oo),gg,hh,ll,mm,pp,tt,uu

**Manufacturer:** Ames
**Orientation:** H
**0.25% Pb:** No
**Renewed:** 19-Jun-2018

**Model:** 4000CIV
**Meters:**
**Spare Parts Only:** Yes
**Bypass:**

**Type:** RP
**Manufacturer:** Ames
**Model:** 4000CIV
**Size:** 10
**Orientation:** H
**Meters:**
**Manual:** 8
**0.25% Pb:** No
**Spare Parts Only:** Yes
**Approved:** 19-Jun-2000
**Renewed:** 19-Jun-2018
**Bypass:**
**Shutoffs:** (oo),gg,hh,ll,mm,pp,tt,uu

---

**Type:** RP
**Manufacturer:** Ames
**Model:** 4000RP
**Size:** 4
**Orientation:** H
**Meters:**
**Manual:** 7
**0.25% Pb:** No
**Spare Parts Only:** Yes
**Approved:** 13-Oct-1987
**Renewed:** 13-Oct-2017
**Bypass:**
**Shutoffs:** (tt),ee,ff,gg,hh,ll,mm,oo,pp,uu,ccc,ddd,ffff,gggg
**Notes:** formerly Model RP

---

**Type:** RP
**Manufacturer:** Ames
**Model:** 4000RP
**Size:** 6
**Orientation:** H
**Meters:**
**Manual:** 7
**0.25% Pb:** No
**Spare Parts Only:** Yes
**Approved:** 13-Oct-1987
**Renewed:** 13-Oct-2017
**Bypass:**
**Shutoffs:** (tt),ee,ff,gg,hh,ll,mm,oo,pp,uu,ccc,ddd,ffff,gggg
**Notes:** formerly Model RP

---

**Type:** RP
**Manufacturer:** Ames
**Model:** 4000RP
**Size:** 8
**Orientation:** H
**Meters:**
**Manual:** 7
**0.25% Pb:** No
**Spare Parts Only:** Yes
**Approved:** 13-Oct-1987
**Renewed:** 13-Oct-2017
**Bypass:**
**Shutoffs:** (tt),ee,ff,gg,hh,ll,mm,oo,pp,uu,ccc,ddd,ffff,gggg
**Notes:** formerly Model RP

---

**Type:** RP
**Manufacturer:** Ames
**Model:** 4000RP
**Size:** 10
**Orientation:** H
**Meters:**
**Manual:** 7
**0.25% Pb:** No
**Spare Parts Only:** Yes
**Approved:** 13-Oct-1987
**Renewed:** 13-Oct-2017
**Bypass:**
**Shutoffs:** (tt),ee,ff,gg,hh,ll,mm,oo,pp,uu,ccc,ddd,ffff,gggg
**Notes:** formerly Model RP

---

**Type:** RP
**Manufacturer:** Ames
**Model:** 4000SS
**Size:** 2 1/2
**Orientation:** H
**Meters:**
**Manual:** 8
**0.25% Pb:** No
**Spare Parts Only:** No
**Approved:** 15-Apr-1994
**Renewed:** 15-Apr-2018
**Bypass:**
**Shutoffs:** (tt),ee,ff,gg,hh,pp,uu,ccc,ddd


2018 © University of Southern California

**Type:** RP
**Manufacturer:** Ames
**Model:** 4000SS
**Size:** 2 1/2
**Orientation:** H
**Meters:**
**Manual:** 8
**0.25% Pb:** Yes
**Spare Parts Only:** No
**Approved:** 15-Apr-1994
**Renewed:** 15-Apr-2018
**Bypass:**
**Shutoffs:** ll,mm,oo,ffff,gggg

---

**Type:** RP
**Manufacturer:** Ames
**Model:** 4000SS
**Size:** 3
**Orientation:** H
**Meters:**
**Manual:** 8
**0.25% Pb:** No
**Spare Parts Only:** No
**Approved:** 15-Apr-1994
**Renewed:** 15-Apr-2018
**Bypass:**
**Shutoffs:** (tt),ee,ff,gg,hh,pp,uu,ccc,ddd

---

**Type:** RP
**Manufacturer:** Ames
**Model:** 4000SS
**Size:** 3
**Orientation:** H
**Meters:**
**Manual:** 8
**0.25% Pb:** Yes
**Spare Parts Only:** No
**Approved:** 15-Apr-1994
**Renewed:** 15-Apr-2018
**Bypass:**
**Shutoffs:** ll,mm,oo,ffff,gggg

---

**Type:** RP
**Manufacturer:** Ames
**Model:** 4000SS
**Size:** 4
**Orientation:** H
**Meters:**
**Manual:** 8
**0.25% Pb:** No
**Spare Parts Only:** No
**Approved:** 15-Apr-1994
**Renewed:** 15-Apr-2018
**Bypass:**
**Shutoffs:** (tt),ee,ff,gg,hh,pp,uu,ccc,ddd

---

**Type:** RP
**Manufacturer:** Ames
**Model:** 4000SS
**Size:** 4
**Orientation:** H
**Meters:**
**Manual:** 8
**0.25% Pb:** Yes
**Spare Parts Only:** No
**Approved:** 15-Apr-1994
**Renewed:** 15-Apr-2018
**Bypass:**
**Shutoffs:** ll,mm,oo,ffff,gggg

---

**Type:** RP
**Manufacturer:** Ames
**Model:** 4000SS
**Size:** 6
**Orientation:** H
**Meters:**
**Manual:** 8
**0.25% Pb:** No
**Spare Parts Only:** No
**Approved:** 22-Sep-1997
**Renewed:** 22-Sep-2018
**Bypass:**
**Shutoffs:** (tt),ee,ff,gg,hh,pp,uu,ccc,ddd

---

**Type:** RP
**Manufacturer:** Ames
**Model:** 4000SS
**Size:** 6
**Orientation:** H
**Meters:**
**Manual:** 8
**0.25% Pb:** Yes
**Spare Parts Only:** No
**Approved:** 22-Sep-1997
**Renewed:** 22-Sep-2018
**Bypass:**
**Shutoffs:** ll,mm,oo,ffff,gggg

**Type:** RP
**Size:** 3/4
**Manual:** 9
**Approved:** 20-Jun-2006
**Shutoffs:** (vv),xx,ooo,hhhh,pppp,rrrrr
**Manufacturer:** Ames
**Orientation:** H
**0.25% Pb:** No
**Renewed:** 20-Jun-2018
**Model:** 400B
**Meters:**
**Spare Parts Only:** Yes
**Bypass:**

---

**Type:** RP
**Size:** 3/4
**Manual:** 9
**Approved:** 30-Aug-2006
**Shutoffs:** (vv),xx,ooo,hhhh,pppp,rrrrr
**Manufacturer:** Ames
**Orientation:** VD
**0.25% Pb:** No
**Renewed:** 30-Aug-2018
**Model:** 400B
**Meters:**
**Spare Parts Only:** Yes
**Bypass:**

---

**Type:** RP
**Size:** 1
**Manual:** 9
**Approved:** 20-Jun-2006
**Shutoffs:** (vv),xx,ooo,hhhh,pppp,rrrrr
**Manufacturer:** Ames
**Orientation:** H
**0.25% Pb:** No
**Renewed:** 20-Jun-2018
**Model:** 400B
**Meters:**
**Spare Parts Only:** Yes
**Bypass:**

---

**Type:** RP
**Size:** 1
**Manual:** 9
**Approved:** 30-Aug-2006
**Shutoffs:** (vv),xx,ooo,hhhh,pppp,rrrrr
**Manufacturer:** Ames
**Orientation:** VD
**0.25% Pb:** No
**Renewed:** 30-Aug-2018
**Model:** 400B
**Meters:**
**Spare Parts Only:** Yes
**Bypass:**

---

**Type:** RP
**Size:** 1 1/4
**Manual:** 9
**Approved:** 20-Jun-2006
**Shutoffs:** (vv),xx,ooo,hhhh,pppp,rrrrr
**Manufacturer:** Ames
**Orientation:** H
**0.25% Pb:** No
**Renewed:** 20-Jun-2018
**Model:** 400B
**Meters:**
**Spare Parts Only:** Yes
**Bypass:**

---

**Type:** RP
**Size:** 1 1/4
**Manual:** 9
**Approved:** 30-Aug-2006
**Shutoffs:** (vv),xx,ooo,hhhh,pppp,rrrrr
**Manufacturer:** Ames
**Orientation:** VD
**0.25% Pb:** No
**Renewed:** 30-Aug-2018
**Model:** 400B
**Meters:**
**Spare Parts Only:** Yes
**Bypass:**

---

**Type:** RP
**Size:** 1 1/2
**Manual:** 9
**Approved:** 20-Jun-2006
**Shutoffs:** (vv),xx,ooo,hhhh,pppp,rrrrr
**Manufacturer:** Ames
**Orientation:** H
**0.25% Pb:** No
**Renewed:** 20-Jun-2018
**Model:** 400B
**Meters:**
**Spare Parts Only:** Yes
**Bypass:**


2018 © University of Southern California

**Type:** RP
**Size:** 1 1/2
**Manual:** 9
**Approved:** 30-Aug-2006
**Shutoffs:** (vv),xx,ooo,hhhh,pppp,rrrrr
**Manufacturer:** Ames
**Orientation:** VD
**0.25% Pb:** No
**Renewed:** 30-Aug-2018
**Model:** 400B
**Meters:**
**Spare Parts Only:** Yes
**Bypass:**

---

**Type:** RP
**Size:** 2
**Manual:** 9
**Approved:** 20-Jun-2006
**Shutoffs:** (vv),xx,ooo,hhhh,pppp,rrrrr
**Manufacturer:** Ames
**Orientation:** H
**0.25% Pb:** No
**Renewed:** 20-Jun-2018
**Model:** 400B
**Meters:**
**Spare Parts Only:** Yes
**Bypass:**

---

**Type:** RP
**Size:** 2
**Manual:** 9
**Approved:** 30-Aug-2006
**Shutoffs:** (vv),xx,ooo,hhhh,pppp,rrrrr
**Manufacturer:** Ames
**Orientation:** VD
**0.25% Pb:** No
**Renewed:** 30-Aug-2018
**Model:** 400B
**Meters:**
**Spare Parts Only:** Yes
**Bypass:**

---

**Type:** RP
**Size:** 3/4
**Manual:** 9
**Approved:** 20-Jun-2006
**Shutoffs:** (vv),xx,ooo,hhhh,pppp,rrrrr
**Manufacturer:** Ames
**Orientation:** VUVD
**0.25% Pb:** No
**Renewed:** 20-Jun-2018
**Model:** 400B-A
**Meters:**
**Spare Parts Only:** Yes
**Bypass:**

---

**Type:** RP
**Size:** 1
**Manual:** 9
**Approved:** 20-Jun-2006
**Shutoffs:** (vv),xx,ooo,hhhh,pppp,rrrrr
**Manufacturer:** Ames
**Orientation:** VUVD
**0.25% Pb:** No
**Renewed:** 20-Jun-2018
**Model:** 400B-A
**Meters:**
**Spare Parts Only:** Yes
**Bypass:**

---

**Type:** RP
**Size:** 1 1/4
**Manual:** 9
**Approved:** 05-Sep-2006
**Shutoffs:** (vv),xx,ooo,hhhh,pppp,rrrrr
**Manufacturer:** Ames
**Orientation:** VUVD
**0.25% Pb:** No
**Renewed:** 05-Sep-2018
**Model:** 400B-A
**Meters:**
**Spare Parts Only:** Yes
**Bypass:**

---

**Type:** RP
**Size:** 1 1/2
**Manual:** 9
**Approved:** 20-Jun-2006
**Shutoffs:** (vv),xx,ooo,hhhh,pppp,rrrrr
**Manufacturer:** Ames
**Orientation:** VUVD
**0.25% Pb:** No
**Renewed:** 20-Jun-2018
**Model:** 400B-A
**Meters:**
**Spare Parts Only:** Yes
**Bypass:**

**Type:** RP
**Size:** 2
**Manual:** 9
**Approved:** 20-Jun-2006
**Shutoffs:** (vv),xx,ooo,hhhh,pppp,rrrrr
**Manufacturer:** Ames
**Orientation:** VUVD
**0.25% Pb:** No
**Renewed:** 20-Jun-2018
**Model:** 400B-A
**Meters:**
**Spare Parts Only:** Yes
**Bypass:**

---

**Type:** RP
**Size:** 3/4
**Manual:** 9
**Approved:** 20-Jun-2006
**Shutoffs:** (vv),xx,ooo,hhhh,pppp,rrrrr
**Manufacturer:** Ames
**Orientation:** VUVU
**0.25% Pb:** No
**Renewed:** 20-Jun-2018
**Model:** 400B-Z
**Meters:**
**Spare Parts Only:** Yes
**Bypass:**

---

**Type:** RP
**Size:** 1
**Manual:** 9
**Approved:** 20-Jun-2006
**Shutoffs:** (vv),xx,ooo,hhhh,pppp,rrrrr
**Manufacturer:** Ames
**Orientation:** VUVU
**0.25% Pb:** No
**Renewed:** 20-Jun-2018
**Model:** 400B-Z
**Meters:**
**Spare Parts Only:** Yes
**Bypass:**

---

**Type:** RP
**Size:** 1 1/4
**Manual:** 9
**Approved:** 20-Jun-2006
**Shutoffs:** (vv),xx,ooo,hhhh,pppp,rrrrr
**Manufacturer:** Ames
**Orientation:** VUVU
**0.25% Pb:** No
**Renewed:** 20-Jun-2018
**Model:** 400B-Z
**Meters:**
**Spare Parts Only:** Yes
**Bypass:**

---

**Type:** RP
**Size:** 1 1/2
**Manual:** 9
**Approved:** 20-Jun-2006
**Shutoffs:** (vv),xx,ooo,hhhh,pppp,rrrrr
**Manufacturer:** Ames
**Orientation:** VUVU
**0.25% Pb:** No
**Renewed:** 20-Jun-2018
**Model:** 400B-Z
**Meters:**
**Spare Parts Only:** Yes
**Bypass:**

---

**Type:** RP
**Size:** 2
**Manual:** 9
**Approved:** 20-Jun-2006
**Shutoffs:** (vv),xx,ooo,hhhh,pppp,rrrrr
**Manufacturer:** Ames
**Orientation:** VUVU
**0.25% Pb:** No
**Renewed:** 20-Jun-2018
**Model:** 400B-Z
**Meters:**
**Spare Parts Only:** Yes
**Bypass:**


2018 © University of Southern California

**Type:** RP **Manufacturer:** Ames **Model:** Colt 400
**Size:** 2 1/2 **Orientation:** H **Meters:**
**Manual:** 9 **0.25% Pb:** No **Spare Parts Only:** No
**Approved:** 07-Oct-2002 **Renewed:** 07-Oct-2017 **Bypass:**
**Shutoffs:** (ppp),qqq,aaaa,bbbb,nnnnn
**Notes:** Check valve discs may be black EPDM or orange Silicone

---

**Type:** RP **Manufacturer:** Ames **Model:** Colt 400
**Size:** 2 1/2 **Orientation:** H **Meters:**
**Manual:** 9 **0.25% Pb:** Yes **Spare Parts Only:** No
**Approved:** 07-Oct-2002 **Renewed:** 07-Oct-2017 **Bypass:**
**Shutoffs:** zzz,dddd,eeee,gggg,kkkk,llll,mmmm,nnnn
**Notes:** Check valve discs may be black EPDM or orange Silicone

---

**Type:** RP **Manufacturer:** Ames **Model:** Colt 400
**Size:** 3 **Orientation:** H **Meters:**
**Manual:** 9 **0.25% Pb:** No **Spare Parts Only:** No
**Approved:** 07-Oct-2002 **Renewed:** 07-Oct-2017 **Bypass:**
**Shutoffs:** (ppp),qqq,aaaa,bbbb,nnnnn
**Notes:** Check valve discs may be black EPDM or orange Silicone

---

**Type:** RP **Manufacturer:** Ames **Model:** Colt 400
**Size:** 3 **Orientation:** H **Meters:**
**Manual:** 9 **0.25% Pb:** Yes **Spare Parts Only:** No
**Approved:** 07-Oct-2002 **Renewed:** 07-Oct-2017 **Bypass:**
**Shutoffs:** zzz,dddd,eeee,gggg,kkkk,llll,mmmm,nnnn
**Notes:** Check valve discs may be black EPDM or orange Silicone

---

**Type:** RP **Manufacturer:** Ames **Model:** Colt 400
**Size:** 4 **Orientation:** H **Meters:**
**Manual:** 9 **0.25% Pb:** No **Spare Parts Only:** No
**Approved:** 07-Oct-2002 **Renewed:** 07-Oct-2017 **Bypass:**
**Shutoffs:** (ppp),qqq,aaaa,bbbb,nnnnn
**Notes:** Check valve discs may be black EPDM or orange Silicone

---

**Type:** RP **Manufacturer:** Ames **Model:** Colt 400
**Size:** 4 **Orientation:** H **Meters:**
**Manual:** 9 **0.25% Pb:** Yes **Spare Parts Only:** No
**Approved:** 07-Oct-2002 **Renewed:** 07-Oct-2017 **Bypass:**
**Shutoffs:** zzz,dddd,eeee,gggg,kkkk,llll,mmmm,nnnn
**Notes:** Check valve discs may be black EPDM or orange Silicone

2018 © University of Southern California

**Type:** RP
**Manufacturer:** Ames
**Model:** Colt 400
**Size:** 6
**Orientation:** H
**Meters:**
**Manual:** 9
**0.25% Pb:** No
**Spare Parts Only:** No
**Approved:** 29-Sep-2004
**Renewed:** 29-Sep-2016
**Bypass:**
**Shutoffs:** (ppp),qqq,aaaa,bbbb,nnnnn

---

**Type:** RP
**Manufacturer:** Ames
**Model:** Colt 400
**Size:** 6
**Orientation:** H
**Meters:**
**Manual:** 9
**0.25% Pb:** Yes
**Spare Parts Only:** No
**Approved:** 29-Sep-2004
**Renewed:** 29-Sep-2016
**Bypass:**
**Shutoffs:** zzz,dddd,eeee,gggg,kkkk,llll,mmmm,nnnn

---

**Type:** RP
**Manufacturer:** Ames
**Model:** Colt 400
**Size:** 8
**Orientation:** H
**Meters:**
**Manual:** 9
**0.25% Pb:** No
**Spare Parts Only:** No
**Approved:** 13-Aug-2007
**Renewed:** 13-Aug-2016
**Bypass:**
**Shutoffs:** (ppp),qqq,aaaa,bbbb,nnnnn

---

**Type:** RP
**Manufacturer:** Ames
**Model:** Colt 400
**Size:** 8
**Orientation:** H
**Meters:**
**Manual:** 9
**0.25% Pb:** Yes
**Spare Parts Only:** No
**Approved:** 13-Aug-2007
**Renewed:** 13-Aug-2016
**Bypass:**
**Shutoffs:** zzz,dddd,eeee,gggg,kkkk,llll,mmmm,nnnn

---

**Type:** RP
**Manufacturer:** Ames
**Model:** Colt 400
**Size:** 10
**Orientation:** H
**Meters:**
**Manual:** 9
**0.25% Pb:** No
**Spare Parts Only:** No
**Approved:** 22-Jul-2009
**Renewed:** 22-Jul-2018
**Bypass:**
**Shutoffs:** (ppp),qqq,sss,ttt,aaaa,bbbb,nnnnn

---

**Type:** RP
**Manufacturer:** Ames
**Model:** Colt 400
**Size:** 10
**Orientation:** H
**Meters:**
**Manual:** 9
**0.25% Pb:** Yes
**Spare Parts Only:** No
**Approved:** 22-Jul-2009
**Renewed:** 22-Jul-2018
**Bypass:**
**Shutoffs:** zzz,cccc,dddd,eeee,gggg,kkkk,llll,mmmm,nnnn


2018 © University of Southern California

**Type:** RP
**Manufacturer:** Ames
**Model:** Colt 400BF
**Size:** 4
**Orientation:** H
**Meters:**
**Manual:** 9
**0.25% Pb:** Yes
**Spare Parts Only:** No
**Approved:** 17-Sep-2007
**Renewed:** 17-Sep-2016
**Bypass:**
**Shutoffs:** (yyy)
**Notes:** Check valve discs may be black EPDM or orange Silicone

---

**Type:** RP
**Manufacturer:** Ames
**Model:** Colt 400BF
**Size:** 6
**Orientation:** H
**Meters:**
**Manual:** 9
**0.25% Pb:** Yes
**Spare Parts Only:** No
**Approved:** 17-Sep-2007
**Renewed:** 17-Sep-2016
**Bypass:**
**Shutoffs:** (yyy)

---

**Type:** RP
**Manufacturer:** Ames
**Model:** Colt 400N
**Size:** 2 1/2
**Orientation:** VUVD
**Meters:**
**Manual:** 9
**0.25% Pb:** No
**Spare Parts Only:** No
**Approved:** 14-Apr-2003
**Renewed:** 14-Apr-2018
**Bypass:**
**Shutoffs:** (ppp),qqq,aaaa,bbbb,nnnnn
**Notes:** Check valve discs may be black EPDM or orange Silicone

---

**Type:** RP
**Manufacturer:** Ames
**Model:** Colt 400N
**Size:** 2 1/2
**Orientation:** VUVD
**Meters:**
**Manual:** 9
**0.25% Pb:** Yes
**Spare Parts Only:** No
**Approved:** 14-Apr-2003
**Renewed:** 14-Apr-2018
**Bypass:**
**Shutoffs:** yyy,zzz,dddd,eeee,gggg,kkkk,llll,mmmm,nnnn
**Notes:** Check valve discs may be black EPDM or orange Silicone

---

**Type:** RP
**Manufacturer:** Ames
**Model:** Colt 400N
**Size:** 3
**Orientation:** VUVD
**Meters:**
**Manual:** 9
**0.25% Pb:** No
**Spare Parts Only:** No
**Approved:** 14-Apr-2003
**Renewed:** 14-Apr-2018
**Bypass:**
**Shutoffs:** (ppp),qqq,aaaa,bbbb,nnnnn
**Notes:** Check valve discs may be black EPDM or orange Silicone

---

**Type:** RP
**Manufacturer:** Ames
**Model:** Colt 400N
**Size:** 3
**Orientation:** VUVD
**Meters:**
**Manual:** 9
**0.25% Pb:** Yes
**Spare Parts Only:** No
**Approved:** 14-Apr-2003
**Renewed:** 14-Apr-2018
**Bypass:**
**Shutoffs:** yyy,zzz,dddd,eeee,gggg,kkkk,llll,mmmm,nnnn
**Notes:** Check valve discs may be black EPDM or orange Silicone

**Type:** RP
**Manufacturer:** Ames
**Model:** Colt 400N
**Size:** 4
**Orientation:** VUVD
**Meters:**
**Manual:** 9
**0.25% Pb:** No
**Spare Parts Only:** No
**Approved:** 14-Apr-2003
**Renewed:** 14-Apr-2018
**Bypass:**
**Shutoffs:** (ppp),qqq,aaaa,bbbb,nnnnn
**Notes:** Check valve discs may be black EPDM or orange Silicone

---

**Type:** RP
**Manufacturer:** Ames
**Model:** Colt 400N
**Size:** 4
**Orientation:** VUVD
**Meters:**
**Manual:** 9
**0.25% Pb:** Yes
**Spare Parts Only:** No
**Approved:** 14-Apr-2003
**Renewed:** 14-Apr-2018
**Bypass:**
**Shutoffs:** yyy,zzz,dddd,eeee,gggg,kkkk,llll,mmmm,nnnn
**Notes:** Check valve discs may be black EPDM or orange Silicone

---

**Type:** RP
**Manufacturer:** Ames
**Model:** Colt 400N
**Size:** 6
**Orientation:** VUVD
**Meters:**
**Manual:** 9
**0.25% Pb:** No
**Spare Parts Only:** No
**Approved:** 15-Nov-2010
**Renewed:** 15-Nov-2016
**Bypass:**
**Shutoffs:** ppp,qqq,aaaa,bbbb,nnnnn

---

**Type:** RP
**Manufacturer:** Ames
**Model:** Colt 400N
**Size:** 6
**Orientation:** VUVD
**Meters:**
**Manual:** 9
**0.25% Pb:** Yes
**Spare Parts Only:** No
**Approved:** 15-Nov-2010
**Renewed:** 15-Nov-2016
**Bypass:**
**Shutoffs:** zzz,dddd,eeee,gggg,kkkk,llll,mmmm,nnnn

---

**Type:** RP
**Manufacturer:** Ames
**Model:** Colt 400N
**Size:** 8
**Orientation:** VUVD
**Meters:**
**Manual:** 9
**0.25% Pb:** Yes
**Spare Parts Only:** No
**Approved:** 14-Jun-2013
**Renewed:** 14-Jun-2016
**Bypass:**
**Shutoffs:** (yyy), zzz, dddd, eeee, gggg, kkkk, llll, mmmm, nnnn

---

**Type:** RP
**Manufacturer:** Ames
**Model:** Colt 400Z
**Size:** 2 1/2
**Orientation:** VUVU
**Meters:**
**Manual:** 9
**0.25% Pb:** No
**Spare Parts Only:** No
**Approved:** 14-Apr-2003
**Renewed:** 14-Apr-2018
**Bypass:**
**Shutoffs:** (ppp),qqq,aaaa,bbbb,nnnnn
**Notes:** Check valve discs may be black EPDM or orange Silicone


2018 © University of Southern California

**Type:** RP
**Manufacturer:** Ames
**Model:** Colt 400Z
**Size:** 2 1/2
**Orientation:** VUVU
**Meters:**
**Manual:** 9
**0.25% Pb:** Yes
**Spare Parts Only:** No
**Approved:** 14-Apr-2003
**Renewed:** 14-Apr-2018
**Bypass:**
**Shutoffs:** yyy,zzz,dddd,eeee,gggg,kkkk,llll,mmmm,nnnn
**Notes:** Check valve discs may be black EPDM or orange Silicone

---

**Type:** RP
**Manufacturer:** Ames
**Model:** Colt 400Z
**Size:** 3
**Orientation:** VUVU
**Meters:**
**Manual:** 9
**0.25% Pb:** No
**Spare Parts Only:** No
**Approved:** 14-Apr-2003
**Renewed:** 14-Apr-2018
**Bypass:**
**Shutoffs:** (ppp),qqq,aaaa,bbbb,nnnnn
**Notes:** Check valve discs may be black EPDM or orange Silicone

---

**Type:** RP
**Manufacturer:** Ames
**Model:** Colt 400Z
**Size:** 3
**Orientation:** VUVU
**Meters:**
**Manual:** 9
**0.25% Pb:** Yes
**Spare Parts Only:** No
**Approved:** 14-Apr-2003
**Renewed:** 14-Apr-2018
**Bypass:**
**Shutoffs:** yyy,zzz,dddd,eeee,gggg,kkkk,llll,mmmm,nnnn
**Notes:** Check valve discs may be black EPDM or orange Silicone

---

**Type:** RP
**Manufacturer:** Ames
**Model:** Colt 400Z
**Size:** 4
**Orientation:** VUVU
**Meters:**
**Manual:** 9
**0.25% Pb:** No
**Spare Parts Only:** No
**Approved:** 14-Apr-2003
**Renewed:** 14-Apr-2018
**Bypass:**
**Shutoffs:** (ppp),qqq,aaaa,bbbb,nnnnn
**Notes:** Check valve discs may be black EPDM or orange Silicone

---

**Type:** RP
**Manufacturer:** Ames
**Model:** Colt 400Z
**Size:** 4
**Orientation:** VUVU
**Meters:**
**Manual:** 9
**0.25% Pb:** Yes
**Spare Parts Only:** No
**Approved:** 14-Apr-2003
**Renewed:** 14-Apr-2018
**Bypass:**
**Shutoffs:** yyy,zzz,dddd,eeee,gggg,kkkk,llll,mmmm,nnnn
**Notes:** Check valve discs may be black EPDM or orange Silicone

---

**Type:** RP
**Manufacturer:** Ames
**Model:** Colt 400Z
**Size:** 8
**Orientation:** VUVU
**Meters:**
**Manual:** 9
**0.25% Pb:** No
**Spare Parts Only:** No
**Approved:** 14-Jun-2013
**Renewed:** 14-Jun-2016
**Bypass:**
**Shutoffs:** ppp, qqq, aaaa, bbbb,

**Type:** RP
**Manufacturer:** Ames
**Model:** Colt 400Z
**Size:** 8
**Orientation:** VUVU
**Meters:**
**Manual:** 9
**0.25% Pb:** Yes
**Spare Parts Only:** No
**Approved:** 14-Jun-2013
**Renewed:** 14-Jun-2016
**Bypass:**
**Shutoffs:** (yyy), zzz, dddd, eeee, gggg, kkkk, llll, mmmm, nnnn

---

**Type:** RP
**Manufacturer:** Ames
**Model:** LF4000B
**Size:** 1/2
**Orientation:** H
**Meters:**
**Manual:** 9
**0.25% Pb:** Yes
**Spare Parts Only:** No
**Approved:** 25-Sep-2013
**Renewed:** 25-Sep-2016
**Bypass:**
**Shutoffs:** (hhhh)

---

**Type:** RP
**Manufacturer:** Ames
**Model:** LF4000BM2
**Size:** 1
**Orientation:** H
**Meters:**
**Manual:** 9
**0.25% Pb:** Yes
**Spare Parts Only:** No
**Approved:** 25-Sep-2013
**Renewed:** 25-Sep-2016
**Bypass:**
**Shutoffs:** (hhhh)

---

**Type:** RP
**Manufacturer:** Ames
**Model:** LF4000BM2
**Size:** 1 1/4
**Orientation:** H
**Meters:**
**Manual:** 8
**0.25% Pb:** Yes
**Spare Parts Only:** No
**Approved:** 25-Sep-2013
**Renewed:** 25-Sep-2016
**Bypass:**
**Shutoffs:** (hhhh)

---

**Type:** RP
**Manufacturer:** Ames
**Model:** LF4000BM2
**Size:** 1 1/2
**Orientation:** H
**Meters:**
**Manual:** 8
**0.25% Pb:** Yes
**Spare Parts Only:** No
**Approved:** 25-Sep-2013
**Renewed:** 25-Sep-2016
**Bypass:**
**Shutoffs:** (hhhh)

---

**Type:** RP
**Manufacturer:** Ames
**Model:** LF4000BM2
**Size:** 2
**Orientation:** H
**Meters:**
**Manual:** 9
**0.25% Pb:** Yes
**Spare Parts Only:** No
**Approved:** 25-Sep-2013
**Renewed:** 25-Sep-2016
**Bypass:**
**Shutoffs:** (hhhh)

---

**Type:** RP
**Manufacturer:** Ames
**Model:** LF4000BM3
**Size:** 3/4
**Orientation:** H
**Meters:**
**Manual:** 9
**0.25% Pb:** Yes
**Spare Parts Only:** No
**Approved:** 25-Sep-2013
**Renewed:** 25-Sep-2016
**Bypass:**
**Shutoffs:** (hhhh)


2018 © University of Southern California

**Type:** RP
**Manufacturer:** Ames
**Model:** Maxim 400
**Size:** 2 1/2
**Orientation:** H
**Meters:**
**Manual:** 9
**0.25% Pb:** No
**Spare Parts Only:** No
**Approved:** 07-Oct-2002
**Renewed:** 07-Oct-2017
**Bypass:**
**Shutoffs:** (ppp),qqq,aaa,bbbb,nnnnn
**Notes:** Check valve discs may be black EPDM or orange Silicone

---

**Type:** RP
**Manufacturer:** Ames
**Model:** Maxim 400
**Size:** 2 1/2
**Orientation:** H
**Meters:**
**Manual:** 9
**0.25% Pb:** Yes
**Spare Parts Only:** No
**Approved:** 07-Oct-2002
**Renewed:** 07-Oct-2017
**Bypass:**
**Shutoffs:** zzz,dddd,eeee,gggg,kkkk,llll,mmmm,nnnn
**Notes:** Check valve discs may be black EPDM or orange Silicone

---

**Type:** RP
**Manufacturer:** Ames
**Model:** Maxim 400
**Size:** 3
**Orientation:** H
**Meters:**
**Manual:** 9
**0.25% Pb:** No
**Spare Parts Only:** No
**Approved:** 07-Oct-2002
**Renewed:** 07-Oct-2017
**Bypass:**
**Shutoffs:** (ppp),qqq,aaa,bbbb,nnnnn
**Notes:** Check valve discs may be black EPDM or orange Silicone

---

**Type:** RP
**Manufacturer:** Ames
**Model:** Maxim 400
**Size:** 3
**Orientation:** H
**Meters:**
**Manual:** 9
**0.25% Pb:** Yes
**Spare Parts Only:** No
**Approved:** 07-Oct-2002
**Renewed:** 07-Oct-2017
**Bypass:**
**Shutoffs:** zzz,dddd,eeee,gggg,kkkk,llll,mmmm,nnnn
**Notes:** Check valve discs may be black EPDM or orange Silicone

---

**Type:** RP
**Manufacturer:** Ames
**Model:** Maxim 400
**Size:** 4
**Orientation:** H
**Meters:**
**Manual:** 9
**0.25% Pb:** No
**Spare Parts Only:** No
**Approved:** 18-Jan-2005
**Renewed:** 18-Jan-2017
**Bypass:**
**Shutoffs:** (ppp),qqq,aaa,bbbb,nnnnn

---

**Type:** RP
**Manufacturer:** Ames
**Model:** Maxim 400
**Size:** 4
**Orientation:** H
**Meters:**
**Manual:** 9
**0.25% Pb:** Yes
**Spare Parts Only:** No
**Approved:** 18-Jan-2005
**Renewed:** 18-Jan-2017
**Bypass:**
**Shutoffs:** kkkk,llll,mmmm,nnnn

**Type:** RP **Manufacturer:** Ames **Model:** Maxim 400
**Size:** 6 **Orientation:** H **Meters:**
**Manual:** 9 **0.25% Pb:** No **Spare Parts Only:** No
**Approved:** 13-Aug-2007 **Renewed:** 13-Aug-2016 **Bypass:**
**Shutoffs:** (ppp),qqq,sss,ttt,aaaa,bbbb,nnnnn

---

**Type:** RP **Manufacturer:** Ames **Model:** Maxim 400
**Size:** 6 **Orientation:** H **Meters:**
**Manual:** 9 **0.25% Pb:** Yes **Spare Parts Only:** No
**Approved:** 13-Aug-2007 **Renewed:** 13-Aug-2016 **Bypass:**
**Shutoffs:** cccc,dddd,kkkk,llll,mmmm,nnnn

---

**Type:** RP **Manufacturer:** Ames **Model:** Maxim 400
**Size:** 8 **Orientation:** H **Meters:**
**Manual:** 9 **0.25% Pb:** No **Spare Parts Only:** No
**Approved:** 22-Jul-2009 **Renewed:** 22-Jul-2018 **Bypass:**
**Shutoffs:** (ppp),qqq,sss,ttt,aaaa,bbbb,nnnnn

---

**Type:** RP **Manufacturer:** Ames **Model:** Maxim 400
**Size:** 8 **Orientation:** H **Meters:**
**Manual:** 9 **0.25% Pb:** Yes **Spare Parts Only:** No
**Approved:** 22-Jul-2009 **Renewed:** 22-Jul-2018 **Bypass:**
**Shutoffs:** zzz,cccc,dddd,eeee,gggg,kkkk,llll,mmmm,nnnn

---

**Type:** RP **Manufacturer:** Ames **Model:** Maxim 400
**Size:** 10 **Orientation:** H **Meters:**
**Manual:** 9 **0.25% Pb:** No **Spare Parts Only:** No
**Approved:** 22-Jul-2009 **Renewed:** 22-Jul-2018 **Bypass:**
**Shutoffs:** (ppp),qqq,sss,ttt,aaaa,bbbb

---

**Type:** RP **Manufacturer:** Ames **Model:** Maxim 400
**Size:** 10 **Orientation:** H **Meters:**
**Manual:** 9 **0.25% Pb:** Yes **Spare Parts Only:** No
**Approved:** 22-Jul-2009 **Renewed:** 22-Jul-2018 **Bypass:**
**Shutoffs:** zzz,cccc,dddd,eeee,gggg,kkkk,llll,mmmm,nnnn

---

**Type:** RP **Manufacturer:** Ames **Model:** Maxim 400N
**Size:** 2 1/2 **Orientation:** VUVD **Meters:**
**Manual:** 9 **0.25% Pb:** No **Spare Parts Only:** No
**Approved:** 14-Apr-2003 **Renewed:** 14-Apr-2018 **Bypass:**
**Shutoffs:** (ppp),qqq,aaaa,bbbb,nnnnn


2018 © University of Southern California

**Type:** RP **Manufacturer:** Ames **Model:** Maxim 400N
**Size:** 2 1/2 **Orientation:** VUVD **Meters:**
**Manual:** 9 **0.25% Pb:** Yes **Spare Parts Only:** No
**Approved:** 14-Apr-2003 **Renewed:** 14-Apr-2018 **Bypass:**
**Shutoffs:** yyy,zzz,dddd,eeee,gggg,kkkk,llll,mmmm,nnnn

---

**Type:** RP **Manufacturer:** Ames **Model:** Maxim 400N
**Size:** 3 **Orientation:** VUVD **Meters:**
**Manual:** 9 **0.25% Pb:** No **Spare Parts Only:** No
**Approved:** 14-Apr-2003 **Renewed:** 14-Apr-2018 **Bypass:**
**Shutoffs:** (ppp),qqq,aaaa,bbbb,nnnnn

---

**Type:** RP **Manufacturer:** Ames **Model:** Maxim 400N
**Size:** 3 **Orientation:** VUVD **Meters:**
**Manual:** 9 **0.25% Pb:** Yes **Spare Parts Only:** No
**Approved:** 14-Apr-2003 **Renewed:** 14-Apr-2018 **Bypass:**
**Shutoffs:** yyy,zzz,dddd,eeee,gggg,kkkk,llll,mmmm,nnnn

---

**Type:** RP **Manufacturer:** Ames **Model:** Maxim 400N
**Size:** 4 **Orientation:** VUVD **Meters:**
**Manual:** 9 **0.25% Pb:** No **Spare Parts Only:** No
**Approved:** 15-Nov-2010 **Renewed:** 15-Nov-2016 **Bypass:**
**Shutoffs:** ppp,qqq,aaaa,bbbb,nnnnn

---

**Type:** RP **Manufacturer:** Ames **Model:** Maxim 400N
**Size:** 4 **Orientation:** VUVD **Meters:**
**Manual:** 9 **0.25% Pb:** Yes **Spare Parts Only:** No
**Approved:** 15-Nov-2010 **Renewed:** 15-Nov-2016 **Bypass:**
**Shutoffs:** yyy,zzz,dddd,eeee,gggg,kkkk,llll,mmmm,nnnn

---

**Type:** RP **Manufacturer:** Ames **Model:** Maxim 400N
**Size:** 6 **Orientation:** VUVD **Meters:**
**Manual:** 9 **0.25% Pb:** No **Spare Parts Only:** No
**Approved:** 14-Jun-2013 **Renewed:** 14-Jun-2016 **Bypass:**
**Shutoffs:** ppp, qqq, aaaa, bbbb,

---

**Type:** RP **Manufacturer:** Ames **Model:** Maxim 400N
**Size:** 6 **Orientation:** VUVD **Meters:**
**Manual:** 9 **0.25% Pb:** Yes **Spare Parts Only:** No
**Approved:** 14-Jun-2013 **Renewed:** 14-Jun-2016 **Bypass:**
**Shutoffs:** (yyy), zzz, dddd, eeee, gggg, kkkk, llll, mmmm, nnnn

**Type:** RP
**Manufacturer:** Ames
**Model:** Maxim 400Z
**Size:** 2 1/2
**Orientation:** VUVU
**Meters:**
**Manual:** 9
**0.25% Pb:** No
**Spare Parts Only:** No
**Approved:** 14-Apr-2003
**Renewed:** 14-Apr-2018
**Bypass:**
**Shutoffs:** (ppp),qqq,aaaa,bbbb,nnnnn

---

**Type:** RP
**Manufacturer:** Ames
**Model:** Maxim 400Z
**Size:** 2 1/2
**Orientation:** VUVU
**Meters:**
**Manual:** 9
**0.25% Pb:** Yes
**Spare Parts Only:** No
**Approved:** 14-Apr-2003
**Renewed:** 14-Apr-2018
**Bypass:**
**Shutoffs:** yyy,zzz,dddd,eeee,gggg,kkkk,llll,mmmm,nnnn

---

**Type:** RP
**Manufacturer:** Ames
**Model:** Maxim 400Z
**Size:** 3
**Orientation:** VUVU
**Meters:**
**Manual:** 9
**0.25% Pb:** No
**Spare Parts Only:** No
**Approved:** 14-Apr-2003
**Renewed:** 14-Apr-2018
**Bypass:**
**Shutoffs:** (ppp),qqq,aaaa,bbbb,nnnnn

---

**Type:** RP
**Manufacturer:** Ames
**Model:** Maxim 400Z
**Size:** 3
**Orientation:** VUVU
**Meters:**
**Manual:** 9
**0.25% Pb:** Yes
**Spare Parts Only:** No
**Approved:** 14-Apr-2003
**Renewed:** 14-Apr-2018
**Bypass:**
**Shutoffs:** yyy,zzz,dddd,eeee,gggg,kkkk,llll,mmmm,nnnn

---

**Type:** RP
**Manufacturer:** Ames
**Model:** Maxim 400Z
**Size:** 6
**Orientation:** VUVU
**Meters:**
**Manual:** 9
**0.25% Pb:** No
**Spare Parts Only:** No
**Approved:** 14-Jun-2013
**Renewed:** 14-Jun-2016
**Bypass:**
**Shutoffs:** ppp, qqq, aaaa, bbbb,

---

**Type:** RP
**Manufacturer:** Ames
**Model:** Maxim 400Z
**Size:** 6
**Orientation:** VUVU
**Meters:**
**Manual:** 9
**0.25% Pb:** Yes
**Spare Parts Only:** No
**Approved:** 14-Jun-2013
**Renewed:** 14-Jun-2016
**Bypass:**
**Shutoffs:** (yyy), zzz, dddd, eeee, gggg, kkkk, llll, mmmm, nnnn

---

**Type:** RP
**Manufacturer:** Ames
**Model:** RP
**Size:** 4
**Orientation:**
**Meters:**
**Manual:**
**0.25% Pb:** No
**Spare Parts Only:** No
**Approved:**
**Renewed:**
**Bypass:**
**Notes:** model designation changed to 4000RP


2018 © University of Southern California

**Type:** RP
**Manufacturer:** Ames
**Model:** RP
**Size:** 6
**Orientation:**
**Meters:**
**Manual:**
**0.25% Pb:** No
**Spare Parts Only:** No
**Approved:**
**Renewed:**
**Bypass:**
**Notes:** model designation changed to 4000RP

---

**Type:** RP
**Manufacturer:** Ames
**Model:** RP
**Size:** 8
**Orientation:**
**Meters:**
**Manual:**
**0.25% Pb:** No
**Spare Parts Only:** No
**Approved:**
**Renewed:**
**Bypass:**
**Notes:** model designation changed to 4000RP

---

**Type:** RP
**Manufacturer:** Ames
**Model:** RP
**Size:** 10
**Orientation:**
**Meters:**
**Manual:**
**0.25% Pb:** No
**Spare Parts Only:** No
**Approved:**
**Renewed:**
**Bypass:**
**Notes:** model designation changed to 4000RP

---

**Type:** RP
**Manufacturer:** Ames
**Model:** U400B
**Size:** 1
**Orientation:** H
**Meters:**
**Manual:** 9
**0.25% Pb:** No
**Spare Parts Only:** Yes
**Approved:** 20-Jun-2006
**Renewed:** 20-Jun-2018
**Bypass:**
**Shutoffs:** (vv),xx,ooo,hhhh,pppp

---

**Type:** RP
**Manufacturer:** Ames
**Model:** U400B
**Size:** 1
**Orientation:** VD
**Meters:**
**Manual:** 9
**0.25% Pb:** No
**Spare Parts Only:** Yes
**Approved:** 30-Aug-2006
**Renewed:** 30-Aug-2018
**Bypass:**
**Shutoffs:** (vv),xx,ooo,hhhh,pppp

---

**Type:** RP
**Manufacturer:** Ames
**Model:** U400B
**Size:** 1 1/4
**Orientation:** H
**Meters:**
**Manual:** 9
**0.25% Pb:** No
**Spare Parts Only:** Yes
**Approved:** 20-Jun-2006
**Renewed:** 20-Jun-2018
**Bypass:**
**Shutoffs:** (vv),xx,ooo,hhhh,pppp

---

**Type:** RP
**Manufacturer:** Ames
**Model:** U400B
**Size:** 1 1/4
**Orientation:** VD
**Meters:**
**Manual:** 9
**0.25% Pb:** No
**Spare Parts Only:** Yes
**Approved:** 30-Aug-2006
**Renewed:** 30-Aug-2018
**Bypass:**
**Shutoffs:** (vv),xx,ooo,hhhh,pppp

**Type:** RP
**Size:** 1 1/2
**Manual:** 9
**Approved:** 20-Jun-2006
**Shutoffs:** (vv),xx,ooo,hhhh,pppp
**Manufacturer:** Ames
**Orientation:** H
**0.25% Pb:** No
**Renewed:** 20-Jun-2018
**Model:** U400B
**Meters:**
**Spare Parts Only:** Yes
**Bypass:**

---

**Type:** RP
**Size:** 1 1/2
**Manual:** 9
**Approved:** 30-Aug-2006
**Shutoffs:** (vv),xx,ooo,hhhh,pppp
**Manufacturer:** Ames
**Orientation:** VD
**0.25% Pb:** No
**Renewed:** 30-Aug-2018
**Model:** U400B
**Meters:**
**Spare Parts Only:** Yes
**Bypass:**

---

**Type:** RP
**Size:** 2
**Manual:** 9
**Approved:** 20-Jun-2006
**Shutoffs:** (vv),xx,ooo,hhhh,pppp
**Manufacturer:** Ames
**Orientation:** H
**0.25% Pb:** No
**Renewed:** 20-Jun-2018
**Model:** U400B
**Meters:**
**Spare Parts Only:** Yes
**Bypass:**

---

**Type:** RP
**Size:** 2
**Manual:** 9
**Approved:** 30-Aug-2006
**Shutoffs:** (vv),xx,ooo,hhhh,pppp
**Manufacturer:** Ames
**Orientation:** VD
**0.25% Pb:** No
**Renewed:** 30-Aug-2018
**Model:** U400B
**Meters:**
**Spare Parts Only:** Yes
**Bypass:**

---

**Type:** RP
**Size:** 3/4
**Manual:** 9
**Approved:** 20-Jun-2006
**Shutoffs:** (vv),xx,ooo,hhhh,pppp
**Manufacturer:** Ames
**Orientation:** VUVD
**0.25% Pb:** No
**Renewed:** 20-Jun-2018
**Model:** U400B-A
**Meters:**
**Spare Parts Only:** Yes
**Bypass:**

---

**Type:** RP
**Size:** 1
**Manual:** 9
**Approved:** 20-Jun-2006
**Shutoffs:** (vv),xx,ooo,hhhh,pppp
**Manufacturer:** Ames
**Orientation:** VUVD
**0.25% Pb:** No
**Renewed:** 20-Jun-2018
**Model:** U400B-A
**Meters:**
**Spare Parts Only:** Yes
**Bypass:**

---

**Type:** RP
**Size:** 1 1/4
**Manual:** 9
**Approved:** 20-Jun-2006
**Shutoffs:** (vv),xx,ooo,hhhh,pppp
**Manufacturer:** Ames
**Orientation:** VUVD
**0.25% Pb:** No
**Renewed:** 20-Jun-2018
**Model:** U400B-A
**Meters:**
**Spare Parts Only:** Yes
**Bypass:**


2018 © University of Southern California

**Type:** RP
**Manufacturer:** Ames
**Model:** U400B-A
**Size:** 1 1/2
**Orientation:** VUVD
**Meters:**
**Manual:** 9
**0.25% Pb:** No
**Spare Parts Only:** Yes
**Approved:** 20-Jun-2006
**Renewed:** 20-Jun-2018
**Bypass:**
**Shutoffs:** (vv),xx,ooo,hhhh,pppp

---

**Type:** RP
**Manufacturer:** Ames
**Model:** U400B-A
**Size:** 2
**Orientation:** VUVD
**Meters:**
**Manual:** 9
**0.25% Pb:** No
**Spare Parts Only:** Yes
**Approved:** 20-Jun-2006
**Renewed:** 20-Jun-2018
**Bypass:**
**Shutoffs:** (vv),xx,ooo,hhhh,pppp

---

**Type:** RP
**Manufacturer:** Apollo/Conbraco
**Model:** 2020499T
**Size:** 3/4
**Orientation:**
**Meters:**
**Manual:**
**0.25% Pb:** No
**Spare Parts Only:** No
**Approved:**
**Renewed:**
**Bypass:**
**Notes:** model designation changed to RP40

---

**Type:** RP
**Manufacturer:** Apollo/Conbraco
**Model:** 4020002
**Size:** 3
**Orientation:**
**Meters:**
**Manual:**
**0.25% Pb:** No
**Spare Parts Only:** No
**Approved:**
**Renewed:**
**Bypass:**
**Notes:** model designation changed to RP40

---

**Type:** RP
**Manufacturer:** Apollo/Conbraco
**Model:** 4020003
**Size:** 3
**Orientation:**
**Meters:**
**Manual:**
**0.25% Pb:** No
**Spare Parts Only:** No
**Approved:**
**Renewed:**
**Bypass:**
**Notes:** model designation changed to RP40

---

**Type:** RP
**Manufacturer:** Apollo/Conbraco
**Model:** 4020005
**Size:** 3
**Orientation:**
**Meters:**
**Manual:**
**0.25% Pb:** No
**Spare Parts Only:** No
**Approved:**
**Renewed:**
**Bypass:**
**Notes:** model designation changed to RP40

---

**Type:** RP
**Manufacturer:** Apollo/Conbraco
**Model:** 4020102
**Size:** 1/4
**Orientation:** H
**Meters:**
**Manual:** 8
**0.25% Pb:** No
**Spare Parts Only:** Yes
**Approved:** 03-May-1991
**Renewed:** 03-May-2018
**Bypass:**
**Shutoffs:** dd

**Type:** RP
**Manufacturer:** Apollo/Conbraco
**Model:** 4020199T
**Size:** 1/4
**Orientation:**
**Meters:**
**Manual:**
**0.25% Pb:** No
**Spare Parts Only:** No
**Approved:**
**Renewed:**
**Bypass:**
**Notes:** model designation changed to RP40

---

**Type:** RP
**Manufacturer:** Apollo/Conbraco
**Model:** 40201A2
**Size:** 1/4
**Orientation:** H
**Meters:**
**Manual:** 8
**0.25% Pb:** No
**Spare Parts Only:** Yes
**Approved:** 19-Apr-1996
**Renewed:** 19-Apr-2017
**Bypass:**
**Shutoffs:** dd

---

**Type:** RP
**Manufacturer:** Apollo/Conbraco
**Model:** 40201A2S
**Size:** 1/4
**Orientation:**
**Meters:**
**Manual:**
**0.25% Pb:** No
**Spare Parts Only:** No
**Approved:**
**Renewed:**
**Bypass:**
**Notes:** model designation changed to RPS40

---

**Type:** RP
**Manufacturer:** Apollo/Conbraco
**Model:** 40201T2
**Size:** 1/4
**Orientation:**
**Meters:**
**Manual:**
**0.25% Pb:** No
**Spare Parts Only:** No
**Approved:**
**Renewed:**
**Bypass:**
**Notes:** model designation changed to RP40

---

**Type:** RP
**Manufacturer:** Apollo/Conbraco
**Model:** 40201T2S
**Size:** 1/4
**Orientation:**
**Meters:**
**Manual:**
**0.25% Pb:** No
**Spare Parts Only:** No
**Approved:**
**Renewed:**
**Bypass:**
**Notes:** model designation changed to RPS40

---

**Type:** RP
**Manufacturer:** Apollo/Conbraco
**Model:** 4020202
**Size:** 3/8
**Orientation:** H
**Meters:**
**Manual:** 8
**0.25% Pb:** No
**Spare Parts Only:** Yes
**Approved:** 03-May-1991
**Renewed:** 03-May-2018
**Bypass:**
**Shutoffs:** dd

---

**Type:** RP
**Manufacturer:** Apollo/Conbraco
**Model:** 4020299T
**Size:** 3/8
**Orientation:**
**Meters:**
**Manual:**
**0.25% Pb:** No
**Spare Parts Only:** No
**Approved:**
**Renewed:**
**Bypass:**
**Notes:** model designation changed to RP40


2018 © University of Southern California

**Type:** RP
**Manufacturer:** Apollo/Conbraco
**Model:** 40202A2
**Size:** 3/8
**Orientation:** H
**Meters:**
**Manual:** 8
**0.25% Pb:** No
**Spare Parts Only:** Yes
**Approved:** 19-Apr-1996
**Renewed:** 19-Apr-2017
**Bypass:**
**Shutoffs:** dd

---

**Type:** RP
**Manufacturer:** Apollo/Conbraco
**Model:** 40202A2S
**Size:** 3/8
**Orientation:**
**Meters:**
**Manual:**
**0.25% Pb:** No
**Spare Parts Only:** No
**Approved:**
**Renewed:**
**Bypass:**
**Notes:** model designation changed to RPS40

---

**Type:** RP
**Manufacturer:** Apollo/Conbraco
**Model:** 40202T2
**Size:** 3/8
**Orientation:**
**Meters:**
**Manual:**
**0.25% Pb:** No
**Spare Parts Only:** No
**Approved:**
**Renewed:**
**Bypass:**
**Notes:** model designation changed to RP40

---

**Type:** RP
**Manufacturer:** Apollo/Conbraco
**Model:** 40202T2S
**Size:** 3/8
**Orientation:**
**Meters:**
**Manual:**
**0.25% Pb:** No
**Spare Parts Only:** No
**Approved:**
**Renewed:**
**Bypass:**
**Notes:** model designation changed to RPS40

---

**Type:** RP
**Manufacturer:** Apollo/Conbraco
**Model:** 4020302
**Size:** 1/2
**Orientation:** H
**Meters:**
**Manual:** 8
**0.25% Pb:** No
**Spare Parts Only:** Yes
**Approved:** 03-May-1991
**Renewed:** 02-May-2017
**Bypass:**
**Shutoffs:** dd

---

**Type:** RP
**Manufacturer:** Apollo/Conbraco
**Model:** 4020399T
**Size:** 1/2
**Orientation:**
**Meters:**
**Manual:**
**0.25% Pb:** No
**Spare Parts Only:** No
**Approved:**
**Renewed:**
**Bypass:**
**Notes:** model designation changed to RP40

---

**Type:** RP
**Manufacturer:** Apollo/Conbraco
**Model:** 40203A2
**Size:** 1/2
**Orientation:** H
**Meters:**
**Manual:** 8
**0.25% Pb:** No
**Spare Parts Only:** Yes
**Approved:** 19-Apr-1996
**Renewed:** 19-Apr-2017
**Bypass:**
**Shutoffs:** dd

**Type:** RP
**Manufacturer:** Apollo/Conbraco
**Model:** 40203A2S
**Size:** 1/2
**Orientation:**
**Meters:**
**Manual:**
**0.25% Pb:** No
**Spare Parts Only:** No
**Approved:**
**Renewed:**
**Bypass:**
**Notes:** model designation changed to RPS40

---

**Type:** RP
**Manufacturer:** Apollo/Conbraco
**Model:** 40203T2
**Size:** 1/2
**Orientation:**
**Meters:**
**Manual:**
**0.25% Pb:** No
**Spare Parts Only:** No
**Approved:**
**Renewed:**
**Bypass:**
**Notes:** model designation changed to RP40

---

**Type:** RP
**Manufacturer:** Apollo/Conbraco
**Model:** 40203T2S
**Size:** 1/2
**Orientation:**
**Meters:**
**Manual:**
**0.25% Pb:** No
**Spare Parts Only:** No
**Approved:**
**Renewed:**
**Bypass:**
**Notes:** model designation changed to RPS40

---

**Type:** RP
**Manufacturer:** Apollo/Conbraco
**Model:** 4020402
**Size:** 3/4
**Orientation:** H
**Meters:**
**Manual:** 8
**0.25% Pb:** No
**Spare Parts Only:** Yes
**Approved:** 08-May-1989
**Renewed:** 08-May-2016
**Bypass:**
**Shutoffs:** dd

---

**Type:** RP
**Manufacturer:** Apollo/Conbraco
**Model:** 40204A2
**Size:** 3/4
**Orientation:** H
**Meters:**
**Manual:** 8
**0.25% Pb:** No
**Spare Parts Only:** Yes
**Approved:** 27-Nov-1991
**Renewed:** 27-Nov-2015
**Bypass:**
**Shutoffs:** dd

---

**Type:** RP
**Manufacturer:** Apollo/Conbraco
**Model:** 40204A2S
**Size:** 3/4
**Orientation:**
**Meters:**
**Manual:**
**0.25% Pb:** No
**Spare Parts Only:** No
**Approved:**
**Renewed:**
**Bypass:**
**Notes:** model designation changed to RPS40

---

**Type:** RP
**Manufacturer:** Apollo/Conbraco
**Model:** 40204A2U
**Size:** 3/4
**Orientation:**
**Meters:**
**Manual:**
**0.25% Pb:** No
**Spare Parts Only:** No
**Approved:**
**Renewed:**
**Bypass:**
**Notes:** model designation changed to RP40N


2018 © University of Southern California

**Type:** RP
**Manufacturer:** Apollo/Conbraco
**Model:** 40204A2Z
**Size:** 3/4
**Orientation:**
**Meters:**
**Manual:**
**0.25% Pb:** No
**Spare Parts Only:** No
**Approved:**
**Renewed:**
**Bypass:**
**Notes:** model designation changed to RP40Z

---

**Type:** RP
**Manufacturer:** Apollo/Conbraco
**Model:** 40204T2
**Size:** 3/4
**Orientation:**
**Meters:**
**Manual:**
**0.25% Pb:** No
**Spare Parts Only:** No
**Approved:**
**Renewed:**
**Bypass:**
**Notes:** model designation changed to RP40

---

**Type:** RP
**Manufacturer:** Apollo/Conbraco
**Model:** 40204T2S
**Size:** 3/4
**Orientation:**
**Meters:**
**Manual:**
**0.25% Pb:** No
**Spare Parts Only:** No
**Approved:**
**Renewed:**
**Bypass:**
**Notes:** model designation changed to RPS40

---

**Type:** RP
**Manufacturer:** Apollo/Conbraco
**Model:** 40204TC2
**Size:** 3/4
**Orientation:**
**Meters:**
**Manual:**
**0.25% Pb:** No
**Spare Parts Only:** No
**Approved:**
**Renewed:**
**Bypass:**
**Notes:** model designation changed to RP40

---

**Type:** RP
**Manufacturer:** Apollo/Conbraco
**Model:** 40204TCU
**Size:** 3/4
**Orientation:** VUVD
**Meters:**
**Manual:** 8
**0.25% Pb:** No
**Spare Parts Only:** Yes
**Approved:** 30-Nov-1998
**Renewed:** 22-Nov-2016
**Bypass:**
**Shutoffs:** (dd)

---

**Type:** RP
**Manufacturer:** Apollo/Conbraco
**Model:** 4020502
**Size:** 1
**Orientation:** H
**Meters:**
**Manual:** 8
**0.25% Pb:** No
**Spare Parts Only:** Yes
**Approved:** 08-May-1989
**Renewed:** 08-May-2016
**Bypass:**
**Shutoffs:** dd

---

**Type:** RP
**Manufacturer:** Apollo/Conbraco
**Model:** 4020599T
**Size:** 1
**Orientation:**
**Meters:**
**Manual:**
**0.25% Pb:** No
**Spare Parts Only:** No
**Approved:**
**Renewed:**
**Bypass:**
**Notes:** model designation changed to RP40

**Type:** RP
**Manufacturer:** Apollo/Conbraco
**Model:** 40205A2
**Size:** 1
**Orientation:** H
**Meters:**
**Manual:** 8
**0.25% Pb:** No
**Spare Parts Only:** Yes
**Approved:** 27-Nov-1991
**Renewed:** 27-Nov-2015
**Bypass:**
**Shutoffs:** dd

---

**Type:** RP
**Manufacturer:** Apollo/Conbraco
**Model:** 40205A2S
**Size:** 1
**Orientation:**
**Meters:**
**Manual:**
**0.25% Pb:** No
**Spare Parts Only:** No
**Approved:**
**Renewed:**
**Bypass:**
**Notes:** model designation changed to RPS40

---

**Type:** RP
**Manufacturer:** Apollo/Conbraco
**Model:** 40205A2U
**Size:** 1
**Orientation:**
**Meters:**
**Manual:**
**0.25% Pb:** No
**Spare Parts Only:** No
**Approved:**
**Renewed:**
**Bypass:**
**Notes:** model designation changed to 40205T2U

---

**Type:** RP
**Manufacturer:** Apollo/Conbraco
**Model:** 40205A2Z
**Size:** 1
**Orientation:**
**Meters:**
**Manual:**
**0.25% Pb:** No
**Spare Parts Only:** No
**Approved:**
**Renewed:**
**Bypass:**
**Notes:** model designation changed to 40205T2Z

---

**Type:** RP
**Manufacturer:** Apollo/Conbraco
**Model:** 40205T2
**Size:** 1
**Orientation:**
**Meters:**
**Manual:**
**0.25% Pb:** No
**Spare Parts Only:** No
**Approved:**
**Renewed:**
**Bypass:**
**Notes:** model designation changed to RP40

---

**Type:** RP
**Manufacturer:** Apollo/Conbraco
**Model:** 40205T2S
**Size:**
**Orientation:**
**Meters:**
**Manual:**
**0.25% Pb:** No
**Spare Parts Only:** No
**Approved:**
**Renewed:**
**Bypass:**
**Notes:** model designation changed to RPS40


2018 © University of Southern California

**Type:** RP
**Size:** 1
**Manual:** 8
**Approved:** 15-Sep-1993
**Shutoffs:** (dd)
**Notes:** formerly 40205A2U

**Manufacturer:** Apollo/Conbraco
**Orientation:** VUVD
**0.25% Pb:** No
**Renewed:** 15-Sep-2017

**Model:** 40205T2U
**Meters:**
**Spare Parts Only:** Yes
**Bypass:**

---

**Type:** RP
**Size:** 1
**Manual:** 8
**Approved:** 15-Sep-1993
**Shutoffs:** (dd)
**Notes:** formerly 40205A2Z

**Manufacturer:** Apollo/Conbraco
**Orientation:** VUVU
**0.25% Pb:** No
**Renewed:** 15-Sep-2017

**Model:** 40205T2Z
**Meters:**
**Spare Parts Only:** Yes
**Bypass:**

---

**Type:** RP
**Size:** 1
**Manual:**
**Approved:**
**Notes:** model designation changed to RP40

**Manufacturer:** Apollo/Conbraco
**Orientation:**
**0.25% Pb:** No
**Renewed:**

**Model:** 40205TC2
**Meters:**
**Spare Parts Only:** No
**Bypass:**

---

**Type:** RP
**Size:** 1
**Manual:** 8
**Approved:** 30-Nov-1998
**Shutoffs:** (dd)

**Manufacturer:** Apollo/Conbraco
**Orientation:** VUVD
**0.25% Pb:** No
**Renewed:** 22-Nov-2016

**Model:** 40205TCU
**Meters:**
**Spare Parts Only:** Yes
**Bypass:**

---

**Type:** RP
**Size:** 1 1/4
**Manual:** 8
**Approved:** 06-Apr-1992
**Shutoffs:** dd

**Manufacturer:** Apollo/Conbraco
**Orientation:** H
**0.25% Pb:** No
**Renewed:** 06-Apr-2016

**Model:** 4020602
**Meters:**
**Spare Parts Only:** Yes
**Bypass:**

---

**Type:** RP
**Size:** 1 1/4
**Manual:**
**Approved:**
**Notes:** model designation changed to RP40

**Manufacturer:** Apollo/Conbraco
**Orientation:**
**0.25% Pb:** No
**Renewed:**

**Model:** 4020699T
**Meters:**
**Spare Parts Only:** No
**Bypass:**

**Type:** RP
**Manufacturer:** Apollo/Conbraco
**Model:** 40206A2
**Size:** 1 1/4
**Orientation:** H
**Meters:**
**Manual:** 8
**0.25% Pb:** No
**Spare Parts Only:** Yes
**Approved:** 21-Jun-1993
**Renewed:** 21-Jun-2017
**Bypass:**
**Shutoffs:** dd

---

**Type:** RP
**Manufacturer:** Apollo/Conbraco
**Model:** 40206A2U
**Size:** 1 1/4
**Orientation:**
**Meters:**
**Manual:**
**0.25% Pb:** No
**Spare Parts Only:** No
**Approved:**
**Renewed:**
**Bypass:**
**Notes:** model designation changed to RP40N

---

**Type:** RP
**Manufacturer:** Apollo/Conbraco
**Model:** 40206A2Z
**Size:** 1 1/4
**Orientation:**
**Meters:**
**Manual:**
**0.25% Pb:** No
**Spare Parts Only:** No
**Approved:**
**Renewed:**
**Bypass:**
**Notes:** model designation changed to RP40Z

---

**Type:** RP
**Manufacturer:** Apollo/Conbraco
**Model:** 40206T2
**Size:** 1 1/4
**Orientation:**
**Meters:**
**Manual:**
**0.25% Pb:** No
**Spare Parts Only:** No
**Approved:**
**Renewed:**
**Bypass:**
**Notes:** model designation changed to RP40

---

**Type:** RP
**Manufacturer:** Apollo/Conbraco
**Model:** 40206T2U
**Size:** 1 1/4
**Orientation:**
**Meters:**
**Manual:**
**0.25% Pb:** No
**Spare Parts Only:** No
**Approved:**
**Renewed:**
**Bypass:**
**Notes:** model designation changed to RP40N

---

**Type:** RP
**Manufacturer:** Apollo/Conbraco
**Model:** 40206T2Z
**Size:** 1 1/4
**Orientation:**
**Meters:**
**Manual:**
**0.25% Pb:** No
**Spare Parts Only:** No
**Approved:**
**Renewed:**
**Bypass:**
**Notes:** model designation changed to RP40Z

---

**Type:** RP
**Manufacturer:** Apollo/Conbraco
**Model:** 4020702
**Size:** 1 1/2
**Orientation:** H
**Meters:**
**Manual:** 8
**0.25% Pb:** No
**Spare Parts Only:** Yes
**Approved:** 17-Mar-1989
**Renewed:** 17-Mar-2016
**Bypass:**
**Shutoffs:** dd


2018 © University of Southern California

**Type:** RP
**Manufacturer:** Apollo/Conbraco
**Model:** 4020799T
**Size:** 1 1/2
**Orientation:**
**Meters:**
**Manual:**
**0.25% Pb:** No
**Spare Parts Only:** No
**Approved:**
**Renewed:**
**Bypass:**
**Notes:** model designation changed to RP40

---

**Type:** RP
**Manufacturer:** Apollo/Conbraco
**Model:** 40207A2
**Size:** 1 1/2
**Orientation:** H
**Meters:**
**Manual:** 8
**0.25% Pb:** No
**Spare Parts Only:** Yes
**Approved:** 16-Sep-1992
**Renewed:** 16-Sep-2016
**Bypass:**
**Shutoffs:** dd

---

**Type:** RP
**Manufacturer:** Apollo/Conbraco
**Model:** 40207A2U
**Size:** 1 1/2
**Orientation:**
**Meters:**
**Manual:**
**0.25% Pb:** No
**Spare Parts Only:** No
**Approved:**
**Renewed:**
**Bypass:**
**Notes:** model designation changed to RP40U

---

**Type:** RP
**Manufacturer:** Apollo/Conbraco
**Model:** 40207A2Z
**Size:** 1 1/2
**Orientation:**
**Meters:**
**Manual:**
**0.25% Pb:** No
**Spare Parts Only:** No
**Approved:**
**Renewed:**
**Bypass:**
**Notes:** model designation changed to RP40Z

---

**Type:** RP
**Manufacturer:** Apollo/Conbraco
**Model:** 40207T2
**Size:** 1 1/2
**Orientation:**
**Meters:**
**Manual:**
**0.25% Pb:** No
**Spare Parts Only:** No
**Approved:**
**Renewed:**
**Bypass:**
**Notes:** model designation changed to RP40

---

**Type:** RP
**Manufacturer:** Apollo/Conbraco
**Model:** 40207T2U
**Size:** 1 1/2
**Orientation:**
**Meters:**
**Manual:**
**0.25% Pb:** No
**Spare Parts Only:** No
**Approved:**
**Renewed:**
**Bypass:**
**Notes:** model designation changed to RP40U

---

**Type:** RP
**Manufacturer:** Apollo/Conbraco
**Model:** 40207T2Z
**Size:** 1 1/2
**Orientation:**
**Meters:**
**Manual:**
**0.25% Pb:** No
**Spare Parts Only:** No
**Approved:**
**Renewed:**
**Bypass:**
**Notes:** model designation changed to RP40Z

**Type:** RP
**Manufacturer:** Apollo/Conbraco
**Model:** 4020802
**Size:** 2
**Orientation:** H
**Meters:**
**Manual:** 8
**0.25% Pb:** No
**Spare Parts Only:** Yes
**Approved:** 17-Mar-1989
**Renewed:** 17-Mar-2016
**Bypass:**
**Shutoffs:** dd

---

**Type:** RP
**Manufacturer:** Apollo/Conbraco
**Model:** 4020899T
**Size:** 2
**Orientation:**
**Meters:**
**Manual:**
**0.25% Pb:** No
**Spare Parts Only:** No
**Approved:**
**Renewed:**
**Bypass:**
**Notes:** model designation changed to RP40

---

**Type:** RP
**Manufacturer:** Apollo/Conbraco
**Model:** 40208A2
**Size:** 2
**Orientation:** H
**Meters:**
**Manual:** 8
**0.25% Pb:** No
**Spare Parts Only:** Yes
**Approved:** 16-Sep-1992
**Renewed:** 16-Sep-2016
**Bypass:**
**Shutoffs:** dd

---

**Type:** RP
**Manufacturer:** Apollo/Conbraco
**Model:** 40208A2U
**Size:** 2
**Orientation:**
**Meters:**
**Manual:**
**0.25% Pb:** No
**Spare Parts Only:** No
**Approved:**
**Renewed:**
**Bypass:**
**Notes:** model designation changed to RP40U

---

**Type:** RP
**Manufacturer:** Apollo/Conbraco
**Model:** 40208A4
**Size:** 2
**Orientation:** H
**Meters:**
**Manual:** 8
**0.25% Pb:** No
**Spare Parts Only:** Yes
**Approved:** 24-May-2000
**Renewed:** 24-May-2018
**Bypass:**
**Shutoffs:** rrr

---

**Type:** RP
**Manufacturer:** Apollo/Conbraco
**Model:** 40208AZ2
**Size:** 2
**Orientation:**
**Meters:**
**Manual:**
**0.25% Pb:** No
**Spare Parts Only:** No
**Approved:**
**Renewed:**
**Bypass:**
**Notes:** model designation changed to RP40Z

---

**Type:** RP
**Manufacturer:** Apollo/Conbraco
**Model:** 40208T2
**Size:** 2
**Orientation:**
**Meters:**
**Manual:**
**0.25% Pb:** No
**Spare Parts Only:** No
**Approved:**
**Renewed:**
**Bypass:**
**Notes:** model designation changed to RP40


2018 © University of Southern California

**Type:** RP
**Manufacturer:** Apollo/Conbraco
**Model:** 40208T2U
**Size:** 2
**Orientation:**
**Meters:**
**Manual:**
**0.25% Pb:** No
**Spare Parts Only:** No
**Approved:**
**Renewed:**
**Bypass:**
**Notes:** model designation changed to RP40U

---

**Type:** RP
**Manufacturer:** Apollo/Conbraco
**Model:** 40208T2Z
**Size:** 2
**Orientation:**
**Meters:**
**Manual:**
**0.25% Pb:** No
**Spare Parts Only:** No
**Approved:**
**Renewed:**
**Bypass:**
**Notes:** model designation changed to RP40Z

---

**Type:** RP
**Manufacturer:** Apollo/Conbraco
**Model:** 4020902
**Size:** 2 1/2
**Orientation:**
**Meters:**
**Manual:**
**0.25% Pb:** No
**Spare Parts Only:** No
**Approved:**
**Renewed:**
**Bypass:**
**Notes:** model designation changed to RP40

---

**Type:** RP
**Manufacturer:** Apollo/Conbraco
**Model:** 4020903
**Size:** 2 1/2
**Orientation:**
**Meters:**
**Manual:**
**0.25% Pb:** No
**Spare Parts Only:** No
**Approved:**
**Renewed:**
**Bypass:**
**Notes:** model designation changed to RP40

---

**Type:** RP
**Manufacturer:** Apollo/Conbraco
**Model:** 4020905
**Size:** 2 1/2
**Orientation:**
**Meters:**
**Manual:**
**0.25% Pb:** No
**Spare Parts Only:** No
**Approved:**
**Renewed:**
**Bypass:**
**Notes:** model designation changed to RP40

---

**Type:** RP
**Manufacturer:** Apollo/Conbraco
**Model:** 4020A02
**Size:** 4
**Orientation:**
**Meters:**
**Manual:**
**0.25% Pb:** No
**Spare Parts Only:** No
**Approved:**
**Renewed:**
**Bypass:**
**Notes:** model designation changed to RP40

---

**Type:** RP
**Manufacturer:** Apollo/Conbraco
**Model:** 4020A03
**Size:** 4
**Orientation:**
**Meters:**
**Manual:**
**0.25% Pb:** No
**Spare Parts Only:** No
**Approved:**
**Renewed:**
**Bypass:**
**Notes:** model designation changed to RP40

**Type:** RP
**Manufacturer:** Apollo/Conbraco
**Model:** 4020A05
**Size:** 4
**Orientation:**
**Meters:**
**Manual:**
**0.25% Pb:** No
**Spare Parts Only:** No
**Approved:**
**Renewed:**
**Bypass:**
**Notes:** model designation changed to RP40

---

**Type:** RP
**Manufacturer:** Apollo/Conbraco
**Model:** 4020C02
**Size:** 6
**Orientation:**
**Meters:**
**Manual:**
**0.25% Pb:** No
**Spare Parts Only:** No
**Approved:**
**Renewed:**
**Bypass:**
**Notes:** model designation changed to RP40

---

**Type:** RP
**Manufacturer:** Apollo/Conbraco
**Model:** 4020C03
**Size:** 6
**Orientation:**
**Meters:**
**Manual:**
**0.25% Pb:** No
**Spare Parts Only:** No
**Approved:**
**Renewed:**
**Bypass:**
**Notes:** model designation changed to RP40

---

**Type:** RP
**Manufacturer:** Apollo/Conbraco
**Model:** 4020C05
**Size:** 6
**Orientation:**
**Meters:**
**Manual:**
**0.25% Pb:** No
**Spare Parts Only:** No
**Approved:**
**Renewed:**
**Bypass:**
**Notes:** model designation changed to RP40

---

**Type:** RP
**Manufacturer:** Apollo/Conbraco
**Model:** 4020E02
**Size:** 8
**Orientation:**
**Meters:**
**Manual:**
**0.25% Pb:** No
**Spare Parts Only:** No
**Approved:**
**Renewed:**
**Bypass:**
**Notes:** model designation changed to RP40

---

**Type:** RP
**Manufacturer:** Apollo/Conbraco
**Model:** 4020E03
**Size:** 8
**Orientation:**
**Meters:**
**Manual:**
**0.25% Pb:** No
**Spare Parts Only:** No
**Approved:**
**Renewed:**
**Bypass:**
**Notes:** model designation changed to RP40

---

**Type:** RP
**Manufacturer:** Apollo/Conbraco
**Model:** 4020G02
**Size:** 10
**Orientation:**
**Meters:**
**Manual:**
**0.25% Pb:** No
**Spare Parts Only:** No
**Approved:**
**Renewed:**
**Bypass:**
**Notes:** model designation changed to RP40


2018 © University of Southern California

**Type:** RP
**Manufacturer:** Apollo/Conbraco
**Model:** 4020G03
**Size:** 10
**Orientation:**
**Meters:**
**Manual:**
**0.25% Pb:** No
**Spare Parts Only:** No
**Approved:**
**Renewed:**
**Bypass:**
**Notes:** model designation changed to RP40

---

**Type:** RP
**Manufacturer:** Apollo/Conbraco
**Model:** 4D-200
**Size:** 2 1/2
**Orientation:** H
**Meters:**
**Manual:** 9
**0.25% Pb:** No
**Spare Parts Only:** Yes
**Approved:** 11-Mar-2009
**Renewed:** 11-Mar-2018
**Bypass:**
**Shutoffs:** (yyy), cccc, dddd

---

**Type:** RP
**Manufacturer:** Apollo/Conbraco
**Model:** 4D-200
**Size:** 3
**Orientation:** H
**Meters:**
**Manual:** 9
**0.25% Pb:** No
**Spare Parts Only:** Yes
**Approved:** 11-Mar-2009
**Renewed:** 11-Mar-2018
**Bypass:**
**Shutoffs:** (yyy), cccc, dddd

---

**Type:** RP
**Manufacturer:** Apollo/Conbraco
**Model:** 4D-200
**Size:** 4
**Orientation:** H
**Meters:**
**Manual:** 9
**0.25% Pb:** No
**Spare Parts Only:** Yes
**Approved:** 11-Mar-2009
**Renewed:** 11-Mar-2018
**Bypass:**
**Shutoffs:** (yyy), cccc, dddd

---

**Type:** RP
**Manufacturer:** Apollo/Conbraco
**Model:** 4D-200U
**Size:** 2 1/2
**Orientation:** VUVD
**Meters:**
**Manual:** 9
**0.25% Pb:** No
**Spare Parts Only:** Yes
**Approved:** 11-Mar-2009
**Renewed:** 11-Mar-2018
**Bypass:**
**Shutoffs:** (yyy), cccc, dddd

---

**Type:** RP
**Manufacturer:** Apollo/Conbraco
**Model:** 4D-200U
**Size:** 3
**Orientation:** VUVD
**Meters:**
**Manual:** 9
**0.25% Pb:** No
**Spare Parts Only:** Yes
**Approved:** 11-Mar-2009
**Renewed:** 11-Mar-2018
**Bypass:**
**Shutoffs:** (yyy), cccc, dddd

---

**Type:** RP
**Manufacturer:** Apollo/Conbraco
**Model:** 4D-200U
**Size:** 4
**Orientation:** VUVD
**Meters:**
**Manual:** 9
**0.25% Pb:** No
**Spare Parts Only:** Yes
**Approved:** 11-Mar-2009
**Renewed:** 11-Mar-2018
**Bypass:**
**Shutoffs:** (yyy), cccc, dddd

**Type:** RP
**Manufacturer:** Apollo/Conbraco
**Model:** RP40
**Size:** 1/4
**Orientation:** H
**Meters:**
**Manual:** 8
**0.25% Pb:** No
**Spare Parts Only:** Yes
**Approved:** 16-Sep-1998
**Renewed:** 16-Sep-2016
**Bypass:**
**Shutoffs:** (dd)
**Notes:** formerly 4020199T, 40201T2

---

**Type:** RP
**Manufacturer:** Apollo/Conbraco
**Model:** RP40
**Size:** 3/8
**Orientation:** H
**Meters:**
**Manual:** 8
**0.25% Pb:** No
**Spare Parts Only:** Yes
**Approved:** 16-Sep-1998
**Renewed:** 16-Sep-2016
**Bypass:**
**Shutoffs:** (dd)
**Notes:** formerly 4020299T, 40202T2

---

**Type:** RP
**Manufacturer:** Apollo/Conbraco
**Model:** RP40
**Size:** 1/2
**Orientation:** H
**Meters:**
**Manual:** 8
**0.25% Pb:** No
**Spare Parts Only:** Yes
**Approved:** 15-Sep-1994
**Renewed:** 15-Sep-2016
**Bypass:**
**Shutoffs:** (dd)
**Notes:** formerly 4020399T, 40203T2

---

**Type:** RP
**Manufacturer:** Apollo/Conbraco
**Model:** RP40
**Size:** 3/4
**Orientation:** H
**Meters:**
**Manual:** 8
**0.25% Pb:** No
**Spare Parts Only:** Yes
**Approved:** 16-Sep-1998
**Renewed:** 16-Sep-2016
**Bypass:**
**Shutoffs:** (dd)
**Notes:** formerly 2020499T, 40204T2, 40204TC2

---

**Type:** RP
**Manufacturer:** Apollo/Conbraco
**Model:** RP40
**Size:** 1
**Orientation:** H
**Meters:**
**Manual:** 8
**0.25% Pb:** No
**Spare Parts Only:** Yes
**Approved:** 16-Sep-1998
**Renewed:** 16-Sep-2016
**Bypass:**
**Shutoffs:** (dd)
**Notes:** formerly 4020599T, 40205T2, 40205TC2

---

**Type:** RP
**Manufacturer:** Apollo/Conbraco
**Model:** RP40
**Size:** 1 1/4
**Orientation:** H
**Meters:**
**Manual:** 8
**0.25% Pb:** No
**Spare Parts Only:** Yes
**Approved:** 16-Sep-1998
**Renewed:** 16-Sep-2016
**Bypass:**
**Shutoffs:** (dd)
**Notes:** formerly 4020699T, 40206T2


2018 © University of Southern California

**Type:** RP
**Manufacturer:** Apollo/Conbraco
**Model:** RP40
**Size:** 1 1/2
**Orientation:** H
**Meters:**
**Manual:** 8
**0.25% Pb:** No
**Spare Parts Only:** Yes
**Approved:** 16-Sep-1998
**Renewed:** 16-Sep-2016
**Bypass:**
**Shutoffs:** (dd)
**Notes:** formerly 4020799T, 40207T2

---

**Type:** RP
**Manufacturer:** Apollo/Conbraco
**Model:** RP40
**Size:** 2
**Orientation:** H
**Meters:**
**Manual:** 8
**0.25% Pb:** No
**Spare Parts Only:** Yes
**Approved:** 16-Sep-1998
**Renewed:** 16-Sep-2016
**Bypass:**
**Shutoffs:** (dd)
**Notes:** formerly 4020899T, 40208T2

---

**Type:** RP
**Manufacturer:** Apollo/Conbraco
**Model:** RP40
**Size:** 2 1/2
**Orientation:** H
**Meters:**
**Manual:** 8
**0.25% Pb:** No
**Spare Parts Only:** Yes
**Approved:** 08-Apr-1991
**Renewed:** 08-Apr-2018
**Bypass:**
**Shutoffs:** (tt),bb,cc,ee,ll,mm,uu,mmm
**Notes:** formerly 4020902, 4020903, 4020905

---

**Type:** RP
**Manufacturer:** Apollo/Conbraco
**Model:** RP40
**Size:** 3
**Orientation:** H
**Meters:**
**Manual:** 8
**0.25% Pb:** No
**Spare Parts Only:** Yes
**Approved:** 08-Apr-1991
**Renewed:** 08-Apr-2018
**Bypass:**
**Shutoffs:** (tt),bb,cc,ee,ll,mm,uu,mmm
**Notes:** formerly 4020002, 4020003, 4020005

---

**Type:** RP
**Manufacturer:** Apollo/Conbraco
**Model:** RP40
**Size:** 4
**Orientation:** H
**Meters:**
**Manual:** 8
**0.25% Pb:** No
**Spare Parts Only:** Yes
**Approved:** 08-Apr-1991
**Renewed:** 08-Apr-2018
**Bypass:**
**Shutoffs:** (tt),bb,cc,ee.ll,mm,uu,mmm
**Notes:** formerly 4020A02, 4020A03, 4020A05

---

**Type:** RP
**Manufacturer:** Apollo/Conbraco
**Model:** RP40
**Size:** 6
**Orientation:** H
**Meters:**
**Manual:** 8
**0.25% Pb:** No
**Spare Parts Only:** Yes
**Approved:** 08-Apr-1991
**Renewed:** 08-Apr-2018
**Bypass:**
**Shutoffs:** (tt),bb,ee,ll
**Notes:** formerly 4020C02, 4020C03, 4020C05

**Type:** RP
**Size:** 8
**Manual:** 8
**Approved:** 22-Oct-1991
**Shutoffs:** (tt),bb,cc,ee,ll,mm,uu
**Notes:** formerly 4020E02, 4020E03

**Manufacturer:** Apollo/Conbraco
**Orientation:** H
**0.25% Pb:** No
**Renewed:** 22-Oct-2018

**Model:** RP40
**Meters:**
**Spare Parts Only:** Yes
**Bypass:**

---

**Type:** RP
**Size:** 10
**Manual:** 8
**Approved:** 13-Apr-1993
**Shutoffs:** (tt),bb,cc,ee,ll,mm,uu
**Notes:** formerly 4020G02, 4020G03

**Manufacturer:** Apollo/Conbraco
**Orientation:** H
**0.25% Pb:** No
**Renewed:** 13-Apr-2017

**Model:** RP40
**Meters:**
**Spare Parts Only:** Yes
**Bypass:**

---

**Type:** RP
**Size:** 3/4
**Manual:** 8
**Approved:** 06-Nov-1992
**Shutoffs:** (dd)
**Notes:** formerly 40204A2U

**Manufacturer:** Apollo/Conbraco
**Orientation:** VUVD
**0.25% Pb:** No
**Renewed:** 06-Nov-2016

**Model:** RP40N
**Meters:**
**Spare Parts Only:** Yes
**Bypass:**

---

**Type:** RP
**Size:** 1 1/4
**Manual:** 8
**Approved:** 02-Feb-1995
**Shutoffs:** (dd)
**Notes:** formerly 40206A2U, 40206T2U

**Manufacturer:** Apollo/Conbraco
**Orientation:** VUVD
**0.25% Pb:** No
**Renewed:** 02-Feb-2016

**Model:** RP40N
**Meters:**
**Spare Parts Only:** Yes
**Bypass:**

---

**Type:** RP
**Size:** 1 1/2
**Manual:** 8
**Approved:** 02-Feb-1995
**Shutoffs:** (dd)
**Notes:** formerly 40207A2U, 40207T2U

**Manufacturer:** Apollo/Conbraco
**Orientation:** VUVD
**0.25% Pb:** No
**Renewed:** 02-Feb-2016

**Model:** RP40U
**Meters:**
**Spare Parts Only:** Yes
**Bypass:**

---

**Type:** RP
**Size:** 2
**Manual:** 8
**Approved:** 02-Feb-1995
**Shutoffs:** (dd)
**Notes:** formerly 40208A2U, 40208T2U

**Manufacturer:** Apollo/Conbraco
**Orientation:** VUVD
**0.25% Pb:** No
**Renewed:** 02-Feb-2016

**Model:** RP40U
**Meters:**
**Spare Parts Only:** Yes
**Bypass:**


2018 © University of Southern California

**Type:** RP
**Size:** 3/4
**Manual:** 8
**Approved:** 06-Nov-1992
**Shutoffs:** (dd)
**Notes:** formerly 40204A2Z

**Manufacturer:** Apollo/Conbraco
**Orientation:** VUVU
**0.25% Pb:** No
**Renewed:** 06-Nov-2016

**Model:** RP40Z
**Meters:**
**Spare Parts Only:** Yes
**Bypass:**

---

**Type:** RP
**Size:** 1 1/4
**Manual:** 8
**Approved:** 02-Feb-1995
**Shutoffs:** (dd)
**Notes:** formerly 40206A2Z, 40206T2Z

**Manufacturer:** Apollo/Conbraco
**Orientation:** VUVU
**0.25% Pb:** No
**Renewed:** 02-Feb-2016

**Model:** RP40Z
**Meters:**
**Spare Parts Only:** Yes
**Bypass:**

---

**Type:** RP
**Size:** 1 1/2
**Manual:** 8
**Approved:** 02-Feb-1995
**Shutoffs:** (dd)
**Notes:** formerly 40207A2Z, 40207T2Z

**Manufacturer:** Apollo/Conbraco
**Orientation:** VUVU
**0.25% Pb:** No
**Renewed:** 02-Feb-2016

**Model:** RP40Z
**Meters:**
**Spare Parts Only:** Yes
**Bypass:**

---

**Type:** RP
**Size:** 2
**Manual:** 8
**Approved:** 02-Feb-1995
**Shutoffs:** (dd)
**Notes:** formerly 40208AZ2, 40208T2Z

**Manufacturer:** Apollo/Conbraco
**Orientation:** VUVU
**0.25% Pb:** No
**Renewed:** 02-Feb-2016

**Model:** RP40Z
**Meters:**
**Spare Parts Only:** Yes
**Bypass:**

---

**Type:** RP
**Size:** 1/2
**Manual:** 9
**Approved:** 29-Nov-2011
**Shutoffs:** (iiiii),sssss

**Manufacturer:** Apollo/Conbraco
**Orientation:** H
**0.25% Pb:** No
**Renewed:** 29-Oct-2017

**Model:** RP4A
**Meters:**
**Spare Parts Only:** No
**Bypass:**

---

**Type:** RP
**Size:** 3/4
**Manual:** 9
**Approved:** 14-Jun-2011
**Shutoffs:** (iiiii),sssss,wwwww

**Manufacturer:** Apollo/Conbraco
**Orientation:** H
**0.25% Pb:** No
**Renewed:** 14-Jun-2017

**Model:** RP4A
**Meters:**
**Spare Parts Only:** No
**Bypass:**

**Type:** RP
**Size:** 1
**Manual:** 9
**Approved:** 27-Sep-2011
**Shutoffs:** (iiiii),sssss,wwwww

**Manufacturer:** Apollo/Conbraco
**Orientation:** H
**0.25% Pb:** No
**Renewed:** 27-Sep-2017

**Model:** RP4A
**Meters:**
**Spare Parts Only:** No
**Bypass:**

---

**Type:** RP
**Size:** 1 1/4
**Manual:** 9
**Approved:** 11-Dec-2013
**Shutoffs:** (iiiii),sssss,wwwww

**Manufacturer:** Apollo/Conbraco
**Orientation:** H
**0.25% Pb:** No
**Renewed:** 11-Dec-2016

**Model:** RP4A
**Meters:**
**Spare Parts Only:** No
**Bypass:**

---

**Type:** RP
**Size:** 1 1/2
**Manual:** 9
**Approved:** 11-Dec-2013
**Shutoffs:** (iiiii),sssss,wwwww

**Manufacturer:** Apollo/Conbraco
**Orientation:** H
**0.25% Pb:** No
**Renewed:** 11-Dec-2016

**Model:** RP4A
**Meters:**
**Spare Parts Only:** No
**Bypass:**

---

**Type:** RP
**Size:** 2
**Manual:** 9
**Approved:** 29-Nov-2011
**Shutoffs:** (iiiii),sssss,wwwww

**Manufacturer:** Apollo/Conbraco
**Orientation:** H
**0.25% Pb:** No
**Renewed:** 29-Oct-2017

**Model:** RP4A
**Meters:**
**Spare Parts Only:** No
**Bypass:**

---

**Type:** RP
**Size:** 1/2
**Manual:** 9
**Approved:** 18-Nov-2010
**Shutoffs:** (jjjjj)

**Manufacturer:** Apollo/Conbraco
**Orientation:** H
**0.25% Pb:** Yes
**Renewed:** 18-Nov-2016

**Model:** RPLF40
**Meters:**
**Spare Parts Only:** Yes
**Bypass:**

---

**Type:** RP
**Size:** 1 1/4
**Manual:** 9
**Approved:** 18-Nov-2010
**Shutoffs:** (jjjjj)

**Manufacturer:** Apollo/Conbraco
**Orientation:** H
**0.25% Pb:** Yes
**Renewed:** 18-Nov-2016

**Model:** RPLF40
**Meters:**
**Spare Parts Only:** Yes
**Bypass:**

---

**Type:** RP
**Size:** 1 1/2
**Manual:** 9
**Approved:** 18-Nov-2010
**Shutoffs:** (jjjjj)

**Manufacturer:** Apollo/Conbraco
**Orientation:** H
**0.25% Pb:** Yes
**Renewed:** 18-Nov-2016

**Model:** RPLF40
**Meters:**
**Spare Parts Only:** Yes
**Bypass:**


2018 © University of Southern California

**Type:** RP
**Size:** 2
**Manual:** 9
**Approved:** 18-Nov-2010
**Shutoffs:** (jjjjj)
**Manufacturer:** Apollo/Conbraco
**Orientation:** H
**0.25% Pb:** Yes
**Renewed:** 18-Nov-2016
**Model:** RPLF40
**Meters:**
**Spare Parts Only:** Yes
**Bypass:**

---

**Type:** RP
**Size:** 1/2
**Manual:** 9
**Approved:** 29-Nov-2011
**Shutoffs:** (jjjjj),ttttt,uuuuu
**Manufacturer:** Apollo/Conbraco
**Orientation:** H
**0.25% Pb:** Yes
**Renewed:** 29-Oct-2017
**Model:** RPLF4A
**Meters:**
**Spare Parts Only:** No
**Bypass:**

---

**Type:** RP
**Size:** 3/4
**Manual:** 9
**Approved:** 14-Jun-2011
**Shutoffs:** (jjjjj),ttttt,vvvvv
**Manufacturer:** Apollo/Conbraco
**Orientation:** H
**0.25% Pb:** Yes
**Renewed:** 14-Jun-2017
**Model:** RPLF4A
**Meters:**
**Spare Parts Only:** No
**Bypass:**

---

**Type:** RP
**Size:** 1
**Manual:** 9
**Approved:** 27-Sep-2011
**Shutoffs:** (jjjjj),ttttt,vvvvv
**Manufacturer:** Apollo/Conbraco
**Orientation:** H
**0.25% Pb:** Yes
**Renewed:** 27-Sep-2017
**Model:** RPLF4A
**Meters:**
**Spare Parts Only:** No
**Bypass:**

---

**Type:** RP
**Size:** 1 1/4
**Manual:** 9
**Approved:** 11-Dec-2013
**Shutoffs:** (jjjjj),ttttt,vvvvv
**Manufacturer:** Apollo/Conbraco
**Orientation:** H
**0.25% Pb:** Yes
**Renewed:** 11-Dec-2016
**Model:** RPLF4A
**Meters:**
**Spare Parts Only:** No
**Bypass:**

---

**Type:** RP
**Size:** 1 1/2
**Manual:** 9
**Approved:** 11-Dec-2013
**Shutoffs:** (jjjjj),ttttt,vvvvv
**Manufacturer:** Apollo/Conbraco
**Orientation:** H
**0.25% Pb:** Yes
**Renewed:** 11-Dec-2016
**Model:** RPLF4A
**Meters:**
**Spare Parts Only:** No
**Bypass:**

---

**Type:** RP
**Size:** 2
**Manual:** 9
**Approved:** 29-Nov-2011
**Shutoffs:** (jjjjj),ttttt,vvvvv
**Manufacturer:** Apollo/Conbraco
**Orientation:** H
**0.25% Pb:** Yes
**Renewed:** 29-Oct-2017
**Model:** RPLF4A
**Meters:**
**Spare Parts Only:** No
**Bypass:**

**Type:** RP
**Manufacturer:** Apollo/Conbraco
**Model:** RPLF4A
**Size:** 2 1/2
**Orientation:** H
**Meters:**
**Manual:** 10
**0.25% Pb:** Yes
**Spare Parts Only:** No
**Approved:** 25-Feb-2014
**Renewed:** 25-Feb-2017
**Bypass:**
**Shutoffs:** (yyy), cccc, dddd, mmmm, nnnn, xxxxx, yyyyy, zzzzz, aaaaaa

---

**Type:** RP
**Manufacturer:** Apollo/Conbraco
**Model:** RPLF4A
**Size:** 3
**Orientation:** H
**Meters:**
**Manual:** 10
**0.25% Pb:** Yes
**Spare Parts Only:** No
**Approved:** 25-Feb-2014
**Renewed:** 25-Feb-2017
**Bypass:**
**Shutoffs:** (yyy), cccc, dddd, mmmm, nnnn, xxxxx, yyyyy, zzzzz, aaaaaa

---

**Type:** RP
**Manufacturer:** Apollo/Conbraco
**Model:** RPLF4A
**Size:** 4
**Orientation:** H
**Meters:**
**Manual:** 10
**0.25% Pb:** Yes
**Spare Parts Only:** No
**Approved:** 24-Jun-2013
**Renewed:** 24-Jun-2016
**Bypass:**
**Shutoffs:** (yyy), cccc, dddd, mmmm, nnnn, xxxxx, yyyyy, zzzzz, aaaaaa

---

**Type:** RP
**Manufacturer:** Apollo/Conbraco
**Model:** RPLF4A
**Size:** 6
**Orientation:** H
**Meters:**
**Manual:** 10
**0.25% Pb:** Yes
**Spare Parts Only:** No
**Approved:** 24-Jun-2013
**Renewed:** 24-Jun-2016
**Bypass:**
**Shutoffs:** (yyy), cccc, dddd, mmmm, nnnn, xxxxx, yyyyy, zzzzz, aaaaaa

---

**Type:** RP
**Manufacturer:** Apollo/Conbraco
**Model:** RPLF4A
**Size:** 8
**Orientation:** H
**Meters:**
**Manual:** 10
**0.25% Pb:** Yes
**Spare Parts Only:** No
**Approved:** 20-Jan-2017
**Renewed:**
**Bypass:**
**Shutoffs:** (yyy), cccc, dddd, mmmm, nnnn, xxxxx, yyyyy, zzzzz, aaaaaa

---

**Type:** RP
**Manufacturer:** Apollo/Conbraco
**Model:** RPLF4AN
**Size:** 2 1/2
**Orientation:** VUVD
**Meters:**
**Manual:** 10
**0.25% Pb:** Yes
**Spare Parts Only:** No
**Approved:** 27-Apr-2015
**Renewed:** 27-Apr-2018
**Bypass:**
**Shutoffs:** (yyy), cccc, dddd, mmmm, nnnn, xxxxx, yyyyy, zzzzz, aaaaaa

---

**Type:** RP
**Manufacturer:** Apollo/Conbraco
**Model:** RPLF4AN
**Size:** 2 1/2
**Orientation:** VUVU
**Meters:**
**Manual:** 10
**0.25% Pb:** Yes
**Spare Parts Only:** No
**Approved:** 27-Apr-2015
**Renewed:** 27-Apr-2018
**Bypass:**
**Shutoffs:** (yyy), cccc, dddd, mmmm, nnnn, xxxxx, yyyyy, zzzzz, aaaaaa


2018 © University of Southern California

**Type:** RP **Manufacturer:** Apollo/Conbraco **Model:** RPLF4AN
**Size:** 3 **Orientation:** VUVD **Meters:**
**Manual:** 10 **0.25% Pb:** Yes **Spare Parts Only:** No
**Approved:** 27-Apr-2015 **Renewed:** 27-Apr-2018 **Bypass:**
**Shutoffs:** (yyy), cccc, dddd, mmmm, nnnn, xxxxx, yyyyy, zzzzz, aaaaaa

---

**Type:** RP **Manufacturer:** Apollo/Conbraco **Model:** RPLF4AN
**Size:** 3 **Orientation:** VUVU **Meters:**
**Manual:** 10 **0.25% Pb:** Yes **Spare Parts Only:** No
**Approved:** 27-Apr-2015 **Renewed:** 27-Apr-2018 **Bypass:**
**Shutoffs:** (yyy), cccc, dddd, mmmm, nnnn, xxxxx, yyyyy, zzzzz, aaaaaa

---

**Type:** RP **Manufacturer:** Apollo/Conbraco **Model:** RPLF4AN
**Size:** 4 **Orientation:** VUVD **Meters:**
**Manual:** 10 **0.25% Pb:** Yes **Spare Parts Only:** No
**Approved:** 15-May-2014 **Renewed:** 15-May-2017 **Bypass:**
**Shutoffs:** (yyy), cccc, dddd, mmmm, nnnn, xxxxx, yyyyy, zzzzz, aaaaaa

---

**Type:** RP **Manufacturer:** Apollo/Conbraco **Model:** RPLF4AN
**Size:** 4 **Orientation:** VUVU **Meters:**
**Manual:** 10 **0.25% Pb:** Yes **Spare Parts Only:** No
**Approved:** 11-Jun-2014 **Renewed:** 11-Jun-2017 **Bypass:**
**Shutoffs:** (yyy), cccc, dddd, mmmm, nnnn, xxxxx, yyyyy, zzzzz, aaaaaa

---

**Type:** RP **Manufacturer:** Apollo/Conbraco **Model:** RPLF4AN
**Size:** 6 **Orientation:** VUVD **Meters:**
**Manual:** 10 **0.25% Pb:** Yes **Spare Parts Only:** No
**Approved:** 10-Jun-2014 **Renewed:** 10-Jun-2017 **Bypass:**
**Shutoffs:** (yyy), cccc, dddd, mmmm, nnnn, xxxxx, yyyyy, zzzzz, aaaaaa

---

**Type:** RP **Manufacturer:** Apollo/Conbraco **Model:** RPLF4AN
**Size:** 6 **Orientation:** VUVU **Meters:**
**Manual:** 10 **0.25% Pb:** Yes **Spare Parts Only:** No
**Approved:** 11-Jun-2014 **Renewed:** 11-Jun-2017 **Bypass:**
**Shutoffs:** (yyy), cccc, dddd, mmmm, nnnn, xxxxx, yyyyy, zzzzz, aaaaaa

---

**Type:** RP **Manufacturer:** Apollo/Conbraco **Model:** RPLF4AN
**Size:** 8 **Orientation:** VUVD **Meters:**
**Manual:** 10 **0.25% Pb:** Yes **Spare Parts Only:** No
**Approved:** 20-Mar-2017 **Renewed:** **Bypass:**
**Shutoffs:** (yyy), cccc, dddd, mmmm, nnnn, xxxxx, yyyyy, zzzzz, aaaaaa

**Type:** RP **Manufacturer:** Apollo/Conbraco **Model:** RPLF4AN
**Size:** 8 **Orientation:** VUVU **Meters:**
**Manual:** 10 **0.25% Pb:** Yes **Spare Parts Only:** No
**Approved:** 20-Mar-2017 **Renewed:** **Bypass:**
**Shutoffs:** (yyy), cccc, dddd, mmmm, nnnn, xxxxx, yyyyy, zzzzz, aaaaaa

---

**Type:** RP **Manufacturer:** Apollo/Conbraco **Model:** RPLF4AR
**Size:** 2 1/2 **Orientation:** H **Meters:**
**Manual:** 10 **0.25% Pb:** Yes **Spare Parts Only:** No
**Approved:** 21-Dec-2015 **Renewed:** **Bypass:**
**Shutoffs:** (cccc), dddd, mmmm, nnnn, xxxxx, yyyyy, zzzzz, aaaaaa
**Notes:** Integral Stainless Steel grooved spool between the #2 ck and #2 SOV - assembly length: min. 34" and max. 47 1/8"

---

**Type:** RP **Manufacturer:** Apollo/Conbraco **Model:** RPLF4AR
**Size:** 3 **Orientation:** H **Meters:**
**Manual:** 10 **0.25% Pb:** Yes **Spare Parts Only:** No
**Approved:** 21-Dec-2015 **Renewed:** **Bypass:**
**Shutoffs:** (cccc), dddd, mmmm, nnnn, xxxxx, yyyyy, zzzzz, aaaaaa
**Notes:** Integral Stainless Steel grooved spool between the #2 ck and #2 SOV - assembly length: min. 35" and max. 48 1/8"

---

**Type:** RP **Manufacturer:** Apollo/Conbraco **Model:** RPLF4AR
**Size:** 4 **Orientation:** H **Meters:**
**Manual:** 10 **0.25% Pb:** Yes **Spare Parts Only:** No
**Approved:** 21-Dec-2015 **Renewed:** **Bypass:**
**Shutoffs:** (cccc), dddd, mmmm, nnnn, xxxxx, yyyyy, zzzzz, aaaaaa
**Notes:** Integral Stainless Steel grooved spool between the #2 ck and #2 SOV - assembly length: min. 37 3/8" and max. 62 1/4"

---

**Type:** RP **Manufacturer:** Apollo/Conbraco **Model:** RPLF4AR
**Size:** 6 **Orientation:** H **Meters:**
**Manual:** 10 **0.25% Pb:** Yes **Spare Parts Only:** No
**Approved:** 21-Dec-2015 **Renewed:** **Bypass:**
**Shutoffs:** (cccc), dddd, mmmm, nnnn, xxxxx, yyyyy, zzzzz, aaaaaa
**Notes:** Integral Stainless Steel grooved spool between the #2 ck and #2 SOV - assembly length: min. 46" and max. 71 1/4"


2018 © University of Southern California

**Type:** RP
**Manufacturer:** Apollo/Conbraco
**Model:** RPLF4AR
**Size:** 8
**Orientation:** H
**Meters:**
**Manual:** 10
**0.25% Pb:** Yes
**Spare Parts Only:** No
**Approved:** 22-Feb-2018
**Renewed:**
**Bypass:**
**Shutoffs:** (xxxxx), cccc, dddd, mmmm, nnnn, yyyyy, zzzzz, aaaaaa
**Notes:** Integral Stainless Steel grooved spool between the #2 ck and #2 SOV - assembly length: min. 55 3/4" and max. 86"

---

**Type:** RP
**Manufacturer:** Apollo/Conbraco
**Model:** RPS40
**Size:** 1/4
**Orientation:** H
**Meters:**
**Manual:** 8
**0.25% Pb:** No
**Spare Parts Only:** No
**Approved:** 19-Apr-1996
**Renewed:** 19-Apr-2017
**Bypass:**
**Shutoffs:** (uuu)
**Notes:** formerly 40201A2S, 40201T2S

---

**Type:** RP
**Manufacturer:** Apollo/Conbraco
**Model:** RPS40
**Size:** 3/8
**Orientation:** H
**Meters:**
**Manual:** 8
**0.25% Pb:** No
**Spare Parts Only:** No
**Approved:** 19-Apr-1996
**Renewed:** 19-Apr-2017
**Bypass:**
**Shutoffs:** (uuu)
**Notes:** formerly 40202A2S, 40202T2S

---

**Type:** RP
**Manufacturer:** Apollo/Conbraco
**Model:** RPS40
**Size:** 1/2
**Orientation:** H
**Meters:**
**Manual:** 8
**0.25% Pb:** No
**Spare Parts Only:** No
**Approved:** 19-Apr-1996
**Renewed:** 19-Apr-2017
**Bypass:**
**Shutoffs:** (dd)
**Notes:** formerly 40203A2S, 40203T2S

---

**Type:** RP
**Manufacturer:** Apollo/Conbraco
**Model:** RPS40
**Size:** 3/4
**Orientation:** H
**Meters:**
**Manual:** 8
**0.25% Pb:** No
**Spare Parts Only:** No
**Approved:** 16-Aug-1994
**Renewed:** 16-Aug-2018
**Bypass:**
**Shutoffs:** (uuu)
**Notes:** formerly 40204A2S

**Type:** RP
**Manufacturer:** Apollo/Conbraco
**Model:** RPS40
**Size:** 1
**Orientation:** H
**Meters:**
**Manual:** 8
**0.25% Pb:** No
**Spare Parts Only:** No
**Approved:** 16-Aug-1994
**Renewed:** 16-Aug-2018
**Bypass:**
**Shutoffs:** (uuu)
**Notes:** formerly 40204A2S, 40204T2S

**Type:** RP
**Size:** 1/2
**Manual:** 9
**Approved:** 03-Jan-2013
**Shutoffs:** (ooooo), ii, ooo,ffffff

**Manufacturer:** ARI
**Orientation:** H
**0.25% Pb:** No
**Renewed:** 03-Jan-2016

**Model:** RP 500
**Meters:**
**Spare Parts Only:** No
**Bypass:**

---

**Type:** RP
**Size:** 1/2
**Manual:** 9
**Approved:** 18-Feb-2014
**Shutoffs:** (ooooo),ffffff

**Manufacturer:** ARI
**Orientation:** H
**0.25% Pb:** Yes
**Renewed:** 18-Feb-2017

**Model:** RP 500
**Meters:**
**Spare Parts Only:** No
**Bypass:**

---

**Type:** RP
**Size:** 3/4
**Manual:** 9
**Approved:** 02-Mar-2007
**Shutoffs:** (ii),ooo, ooooo, ffffff

**Manufacturer:** ARI
**Orientation:** H
**0.25% Pb:** No
**Renewed:** 02-Mar-2016

**Model:** RP 500
**Meters:**
**Spare Parts Only:** No
**Bypass:**

---

**Type:** RP
**Size:** 3/4
**Manual:** 9
**Approved:** 18-Feb-2014
**Shutoffs:** (ooooo), ffffff

**Manufacturer:** ARI
**Orientation:** H
**0.25% Pb:** Yes
**Renewed:** 18-Feb-2017

**Model:** RP 500
**Meters:**
**Spare Parts Only:** No
**Bypass:**

---

**Type:** RP
**Size:** 1
**Manual:** 9
**Approved:** 02-Mar-2007
**Shutoffs:** (ii),ooo, ooooo, ffffff

**Manufacturer:** ARI
**Orientation:** H
**0.25% Pb:** No
**Renewed:** 02-Mar-2016

**Model:** RP 500
**Meters:**
**Spare Parts Only:** No
**Bypass:**

---

**Type:** RP
**Size:** 1
**Manual:** 9
**Approved:** 18-Feb-2014
**Shutoffs:** (ooooo), ffffff

**Manufacturer:** ARI
**Orientation:** H
**0.25% Pb:** Yes
**Renewed:** 18-Feb-2017

**Model:** RP 500
**Meters:**
**Spare Parts Only:** No
**Bypass:**

---

**Type:** RP
**Size:** 1 1/4
**Manual:** 10
**Approved:** 18-Feb-2014
**Shutoffs:** (ooooo), ffffff

**Manufacturer:** ARI
**Orientation:** H
**0.25% Pb:** Yes
**Renewed:** 18-Feb-2017

**Model:** RP 500
**Meters:**
**Spare Parts Only:** No
**Bypass:**


2018 © University of Southern California

**Type:** RP
**Size:** 1 1/2
**Manual:** 10
**Approved:** 18-Feb-2014
**Shutoffs:** (ooooo), ffffff

**Manufacturer:** ARI
**Orientation:** H
**0.25% Pb:** Yes
**Renewed:** 18-Feb-2017

**Model:** RP 500
**Meters:**
**Spare Parts Only:** No
**Bypass:**

---

**Type:** RP
**Size:** 2
**Manual:** 10
**Approved:** 18-Feb-2014
**Shutoffs:** (ooooo), ffffff

**Manufacturer:** ARI
**Orientation:** H
**0.25% Pb:** Yes
**Renewed:** 18-Feb-2017

**Model:** RP 500
**Meters:**
**Spare Parts Only:** No
**Bypass:**

---

**Type:** RP
**Size:** 1/2
**Manual:** 10
**Approved:** 06-Sep-2018
**Shutoffs:** (int)

**Manufacturer:** ARI
**Orientation:** H
**0.25% Pb:** Yes
**Renewed:**

**Model:** RP 501
**Meters:**
**Spare Parts Only:** No
**Bypass:**

---

**Type:** RP
**Size:** 3/4
**Manual:** 10
**Approved:** 20-Mar-2017
**Shutoffs:** (int)

**Manufacturer:** ARI
**Orientation:** H
**0.25% Pb:** Yes
**Renewed:**

**Model:** RP 501
**Meters:**
**Spare Parts Only:** No
**Bypass:**

---

**Type:** RP
**Size:** 1
**Manual:** 10
**Approved:** 20-Mar-2017
**Shutoffs:** (int)

**Manufacturer:** ARI
**Orientation:** H
**0.25% Pb:** Yes
**Renewed:**

**Model:** RP 501
**Meters:**
**Spare Parts Only:** No
**Bypass:**

---

**Type:** RP
**Size:** 1 1/4
**Manual:** 10
**Approved:** 20-Mar-2017
**Shutoffs:** (int)

**Manufacturer:** ARI
**Orientation:** H
**0.25% Pb:** Yes
**Renewed:**

**Model:** RP 501
**Meters:**
**Spare Parts Only:** No
**Bypass:**

---

**Type:** RP
**Size:** 1 1/2
**Manual:** 10
**Approved:** 20-Mar-2017
**Shutoffs:** (int)

**Manufacturer:** ARI
**Orientation:** H
**0.25% Pb:** Yes
**Renewed:**

**Model:** RP 501
**Meters:**
**Spare Parts Only:** No
**Bypass:**

**Type:** RP
**Size:** 2
**Manual:** 10
**Approved:** 20-Mar-2017
**Shutoffs:** (int)
**Manufacturer:** ARI
**Orientation:** H
**0.25% Pb:** Yes
**Renewed:**
**Model:** RP 501
**Meters:**
**Spare Parts Only:** No
**Bypass:**

---

**Type:** RP
**Size:** 2 1/2
**Manual:** 10
**Approved:** 20-Jan-2017
**Shutoffs:** (int)
**Manufacturer:** Backflow Direct
**Orientation:** H
**0.25% Pb:** Yes
**Renewed:**
**Model:** Deringer 40
**Meters:**
**Spare Parts Only:** No
**Bypass:**

---

**Type:** RP
**Size:** 3
**Manual:** 10
**Approved:** 20-Jan-2017
**Shutoffs:** (int)
**Manufacturer:** Backflow Direct
**Orientation:** H
**0.25% Pb:** Yes
**Renewed:**
**Model:** Deringer 40
**Meters:**
**Spare Parts Only:** No
**Bypass:**

---

**Type:** RP
**Size:** 4
**Manual:** 10
**Approved:** 20-Jan-2017
**Shutoffs:** (int)
**Manufacturer:** Backflow Direct
**Orientation:** H
**0.25% Pb:** Yes
**Renewed:**
**Model:** Deringer 40
**Meters:**
**Spare Parts Only:** No
**Bypass:**

---

**Type:** RP
**Size:** 8
**Manual:** 10
**Approved:** 27-Jun-2017
**Shutoffs:** (int)
**Manufacturer:** Backflow Direct
**Orientation:** H
**0.25% Pb:** Yes
**Renewed:**
**Model:** Deringer 40
**Meters:**
**Spare Parts Only:** No
**Bypass:**

---

**Type:** RP
**Size:** 2 1/2
**Manual:** 10
**Approved:** 24-Oct-2018
**Shutoffs:** (ssssss), tttttt
**Manufacturer:** Backflow Direct
**Orientation:** H
**0.25% Pb:** Yes
**Renewed:**
**Model:** Deringer 40G
**Meters:**
**Spare Parts Only:** No
**Bypass:**

---

**Type:** RP
**Size:** 3
**Manual:** 10
**Approved:** 24-Oct-2018
**Shutoffs:** (ssssss), tttttt
**Manufacturer:** Backflow Direct
**Orientation:** H
**0.25% Pb:** Yes
**Renewed:**
**Model:** Deringer 40G
**Meters:**
**Spare Parts Only:** No
**Bypass:**


2018 © University of Southern California

**Type:** RP
**Size:** 4
**Manual:** 10
**Approved:** 24-Oct-2018
**Shutoffs:** (ssssss), tttttt

**Manufacturer:** Backflow Direct
**Orientation:** H
**0.25% Pb:** Yes
**Renewed:**

**Model:** Deringer 40G
**Meters:**
**Spare Parts Only:** No
**Bypass:**

---

**Type:** RP
**Size:** 6
**Manual:** 10
**Approved:** 27-Jun-2017
**Shutoffs:** (int)

**Manufacturer:** Backflow Direct
**Orientation:** H
**0.25% Pb:** Yes
**Renewed:**

**Model:** Deringer 40X
**Meters:**
**Spare Parts Only:** No
**Bypass:**

---

**Type:** RP
**Size:** 2 1/2
**Manual:** 10
**Approved:** 15-Mar-2018
**Shutoffs:** (int)

**Manufacturer:** Backflow Direct
**Orientation:** H
**0.25% Pb:** Yes
**Renewed:**

**Model:** Magnum 40
**Meters:**
**Spare Parts Only:** No
**Bypass:**

---

**Type:** RP
**Size:** 3
**Manual:** 10
**Approved:** 15-Mar-2018
**Shutoffs:** (int)

**Manufacturer:** Backflow Direct
**Orientation:** H
**0.25% Pb:** Yes
**Renewed:**

**Model:** Magnum 40
**Meters:**
**Spare Parts Only:** No
**Bypass:**

---

**Type:** RP
**Size:** 4
**Manual:** 10
**Approved:** 15-Mar-2018
**Shutoffs:** (int)

**Manufacturer:** Backflow Direct
**Orientation:** H
**0.25% Pb:** Yes
**Renewed:**

**Model:** Magnum 40
**Meters:**
**Spare Parts Only:** No
**Bypass:**

---

**Type:** RP
**Size:** 8
**Manual:** 10
**Approved:** 15-Mar-2018
**Shutoffs:** (int)

**Manufacturer:** Backflow Direct
**Orientation:** H
**0.25% Pb:** Yes
**Renewed:**

**Model:** Magnum 40
**Meters:**
**Spare Parts Only:** No
**Bypass:**

---

**Type:** RP
**Size:** 2 1/2
**Manual:** 10
**Approved:** 24-Oct-2018
**Shutoffs:** (qqqqqq), rrrrrr

**Manufacturer:** Backflow Direct
**Orientation:** H
**0.25% Pb:** Yes
**Renewed:**

**Model:** Magnum 40G
**Meters:**
**Spare Parts Only:** No
**Bypass:**

**Type:** RP
**Size:** 3
**Manual:** 10
**Approved:** 24-Oct-2018
**Shutoffs:** (qqqqqq), rrrrrr

**Manufacturer:** Backflow Direct
**Orientation:** H
**0.25% Pb:** Yes
**Renewed:**

**Model:** Magnum 40G
**Meters:**
**Spare Parts Only:** No
**Bypass:**

---

**Type:** RP
**Size:** 4
**Manual:** 10
**Approved:** 24-Oct-2018
**Shutoffs:** (qqqqqq), rrrrrr

**Manufacturer:** Backflow Direct
**Orientation:** H
**0.25% Pb:** Yes
**Renewed:**

**Model:** Magnum 40G
**Meters:**
**Spare Parts Only:** No
**Bypass:**

---

**Type:** RP
**Size:** 6
**Manual:** 10
**Approved:** 15-Mar-2018
**Shutoffs:** (int)

**Manufacturer:** Backflow Direct
**Orientation:** H
**0.25% Pb:** Yes
**Renewed:**

**Model:** Magnum 40X
**Meters:**
**Spare Parts Only:** No
**Bypass:**

---

**Type:** RP
**Size:** 8
**Manual:** 8
**Approved:** 22-Jun-1989
**Shutoffs:** (gg),hh,qq,rr

**Manufacturer:** Cla-Val
**Orientation:** H
**0.25% Pb:** No
**Renewed:** 22-Jun-2016

**Model:** RP4
**Meters:**
**Spare Parts Only:** Yes
**Bypass:**

---

**Type:** RP
**Size:** 10
**Manual:** 8
**Approved:** 22-Jun-1989
**Shutoffs:** (gg),hh,qq,rr

**Manufacturer:** Cla-Val
**Orientation:** H
**0.25% Pb:** No
**Renewed:** 22-Jun-2016

**Model:** RP4
**Meters:**
**Spare Parts Only:** Yes
**Bypass:**

---

**Type:** RP
**Size:**
**Manual:**
**Approved:**
**Notes:** See Apollo/Conbraco

**Manufacturer:** Conbraco
**Orientation:**
**0.25% Pb:** No
**Renewed:**

**Model:**
**Meters:**
**Spare Parts Only:** No
**Bypass:**


2018 © University of Southern California

**Type:** RP
**Manufacturer:** Febco
**Model:** 825Y
**Size:** 3/4
**Orientation:** H
**Meters:**
**Manual:** 6
**0.25% Pb:** No
**Spare Parts Only:** No
**Approved:** 19-Mar-1982
**Renewed:** 19-Mar-2018
**Bypass:**
**Shutoffs:** (ii),fff,jjj,ooo
**Notes:** Replaceable check valve seats starting with serial No. J000001

---

**Type:** RP
**Manufacturer:** Febco
**Model:** 825Y
**Size:** 1
**Orientation:** H
**Meters:**
**Manual:** 6
**0.25% Pb:** No
**Spare Parts Only:** No
**Approved:** 19-Mar-1982
**Renewed:** 19-Mar-2018
**Bypass:**
**Shutoffs:** (ii),fff,jjj,ooo
**Notes:** Replaceable check valve seats starting with serial No. J000001

---

**Type:** RP
**Manufacturer:** Febco
**Model:** 825Y
**Size:** 1 1/4
**Orientation:** H
**Meters:**
**Manual:** 6
**0.25% Pb:** No
**Spare Parts Only:** Yes
**Approved:** 03-Jun-1982
**Renewed:** 01-Jun-2018
**Bypass:**
**Shutoffs:** ii,fff,jjj,ooo

---

**Type:** RP
**Manufacturer:** Febco
**Model:** 825Y
**Size:** 1 1/2
**Orientation:** H
**Meters:**
**Manual:** 6
**0.25% Pb:** No
**Spare Parts Only:** No
**Approved:** 06-Aug-1982
**Renewed:** 06-Aug-2018
**Bypass:**
**Shutoffs:** (ii),fff,jjj,ooo
**Notes:** Replaceable check valve seats starting with serial No. J000001

---

**Type:** RP
**Manufacturer:** Febco
**Model:** 825Y
**Size:** 2
**Orientation:** H
**Meters:**
**Manual:** 6
**0.25% Pb:** No
**Spare Parts Only:** No
**Approved:** 06-Aug-1982
**Renewed:** 06-Aug-2018
**Bypass:**
**Shutoffs:** (ii),fff,ooo
**Notes:** Replaceable check valve seats starting with serial No. J000001

---

**Type:** RP
**Manufacturer:** Febco
**Model:** 825YA
**Size:** 3/4
**Orientation:** H
**Meters:**
**Manual:** 8
**0.25% Pb:** No
**Spare Parts Only:** No
**Approved:** 05-Mar-1990
**Renewed:** 05-Mar-2017
**Bypass:**
**Shutoffs:** (ii),fff,jjj,ooo
**Notes:** Replaceable check valve seats starting with serial No. J000001

**Type:** RP
**Manufacturer:** Febco
**Model:** 825YA
**Size:** 3/4
**Orientation:** HVD
**Meters:**
**Manual:** 8
**0.25% Pb:** No
**Spare Parts Only:** No
**Approved:** 05-Mar-1990
**Renewed:** 05-Mar-2017
**Bypass:**
**Shutoffs:** (ii),fff,jjj,ooo
**Notes:** Replaceable check valve seats starting with serial No. J000001

---

**Type:** RP
**Manufacturer:** Febco
**Model:** 825YA
**Size:** 3/4
**Orientation:** VUH
**Meters:**
**Manual:** 8
**0.25% Pb:** No
**Spare Parts Only:** No
**Approved:** 05-Mar-1990
**Renewed:** 05-Mar-2017
**Bypass:**
**Shutoffs:** (ii),fff,jjj,ooo
**Notes:** Replaceable check valve seats starting with serial No. J000001

---

**Type:** RP
**Manufacturer:** Febco
**Model:** 825YA
**Size:** 3/4
**Orientation:** VUVD
**Meters:**
**Manual:** 8
**0.25% Pb:** No
**Spare Parts Only:** No
**Approved:** 05-Mar-1990
**Renewed:** 05-Mar-2017
**Bypass:**
**Shutoffs:** (ii),fff,jjj,ooo
**Notes:** Replaceable check valve seats starting with serial No. J000001

---

**Type:** RP
**Manufacturer:** Febco
**Model:** 825YA
**Size:** 1
**Orientation:** H
**Meters:**
**Manual:** 8
**0.25% Pb:** No
**Spare Parts Only:** No
**Approved:** 05-Mar-1990
**Renewed:** 05-Mar-2017
**Bypass:**
**Shutoffs:** (ii),fff,jjj,ooo
**Notes:** Replaceable check valve seats starting with serial No. J000001

---

**Type:** RP
**Manufacturer:** Febco
**Model:** 825YA
**Size:** 1
**Orientation:** HVD
**Meters:**
**Manual:** 8
**0.25% Pb:** No
**Spare Parts Only:** No
**Approved:** 05-Mar-1990
**Renewed:** 05-Mar-2017
**Bypass:**
**Shutoffs:** (ii),fff,jjj,ooo
**Notes:** Replaceable check valve seats starting with serial No. J000001

---

**Type:** RP
**Manufacturer:** Febco
**Model:** 825YA
**Size:** 1
**Orientation:** VUH
**Meters:**
**Manual:** 8
**0.25% Pb:** No
**Spare Parts Only:** No
**Approved:** 05-Mar-1990
**Renewed:** 05-Mar-2017
**Bypass:**
**Shutoffs:** (ii),fff,jjj,ooo
**Notes:** Replaceable check valve seats starting with serial No. J000001


2018 © University of Southern California

**Type:** RP
**Manufacturer:** Febco
**Model:** 825YA
**Size:** 1
**Orientation:** VUVD
**Meters:**
**Manual:** 8
**0.25% Pb:** No
**Spare Parts Only:** No
**Approved:** 05-Mar-1990
**Renewed:** 05-Mar-2017
**Bypass:**
**Shutoffs:** (ii),fff,jjj,ooo
**Notes:** Replaceable check valve seats starting with serial No. J000001

---

**Type:** RP
**Manufacturer:** Febco
**Model:** 825YA
**Size:** 1 1/2
**Orientation:** H
**Meters:**
**Manual:** 8
**0.25% Pb:** No
**Spare Parts Only:** No
**Approved:** 08-May-1989
**Renewed:** 08-May-2016
**Bypass:**
**Shutoffs:** (ii),fff,jjj,ooo
**Notes:** Replaceable check valve seats starting with serial No. J000001

---

**Type:** RP
**Manufacturer:** Febco
**Model:** 825YA
**Size:** 1 1/2
**Orientation:** HVD
**Meters:**
**Manual:** 8
**0.25% Pb:** No
**Spare Parts Only:** No
**Approved:** 08-May-1989
**Renewed:** 08-May-2016
**Bypass:**
**Shutoffs:** (ii),fff,jjj,ooo
**Notes:** Replaceable check valve seats starting with serial No. J000001

---

**Type:** RP
**Manufacturer:** Febco
**Model:** 825YA
**Size:** 1 1/2
**Orientation:** VUH
**Meters:**
**Manual:** 8
**0.25% Pb:** No
**Spare Parts Only:** No
**Approved:** 08-May-1989
**Renewed:** 08-May-2016
**Bypass:**
**Shutoffs:** (ii),fff,jjj,ooo
**Notes:** Replaceable check valve seats starting with serial No. J000001

---

**Type:** RP
**Manufacturer:** Febco
**Model:** 825YA
**Size:** 1 1/2
**Orientation:** VUVD
**Meters:**
**Manual:** 8
**0.25% Pb:** No
**Spare Parts Only:** No
**Approved:** 08-May-1989
**Renewed:** 08-May-2016
**Bypass:**
**Shutoffs:** (ii),fff,jjj,ooo
**Notes:** Replaceable check valve seats starting with serial No. J000001

---

**Type:** RP
**Manufacturer:** Febco
**Model:** 825YA
**Size:** 2
**Orientation:** H
**Meters:**
**Manual:** 8
**0.25% Pb:** No
**Spare Parts Only:** No
**Approved:** 08-May-1989
**Renewed:** 08-May-2016
**Bypass:**
**Shutoffs:** (ii),fff,ooo
**Notes:** Replaceable check valve seats starting with serial No. J000001

**Type:** RP
**Manufacturer:** Febco
**Model:** 825YA
**Size:** 2
**Orientation:** HVD
**Meters:**
**Manual:** 8
**0.25% Pb:** No
**Spare Parts Only:** No
**Approved:** 08-May-1989
**Renewed:** 08-May-2016
**Bypass:**
**Shutoffs:** (ii),fff,ooo
**Notes:** Replaceable check valve seats starting with serial No. J000001

---

**Type:** RP
**Manufacturer:** Febco
**Model:** 825YA
**Size:** 2
**Orientation:** VUH
**Meters:**
**Manual:** 8
**0.25% Pb:** No
**Spare Parts Only:** No
**Approved:** 08-May-1989
**Renewed:** 08-May-2016
**Bypass:**
**Shutoffs:** (ii),fff,ooo
**Notes:** Replaceable check valve seats starting with serial No. J000001

---

**Type:** RP
**Manufacturer:** Febco
**Model:** 825YA
**Size:** 2
**Orientation:** VUVD
**Meters:**
**Manual:** 8
**0.25% Pb:** No
**Spare Parts Only:** No
**Approved:** 08-May-1989
**Renewed:** 08-May-2016
**Bypass:**
**Shutoffs:** (ii),fff,ooo
**Notes:** Replaceable check valve seats starting with serial No. J000001

---

**Type:** RP
**Manufacturer:** Febco
**Model:** 825YAR
**Size:** 3/4
**Orientation:** H
**Meters:**
**Manual:** 8
**0.25% Pb:** No
**Spare Parts Only:** Yes
**Approved:** 22-Jan-1993
**Renewed:** 22-Jan-2017
**Bypass:**
**Shutoffs:** ii,fff,jjj,ooo

---

**Type:** RP
**Manufacturer:** Febco
**Model:** 825YAR
**Size:** 3/4
**Orientation:** HVD
**Meters:**
**Manual:** 8
**0.25% Pb:** No
**Spare Parts Only:** Yes
**Approved:** 22-Jan-1993
**Renewed:** 22-Jan-2017
**Bypass:**
**Shutoffs:** ii,fff,jjj,ooo

---

**Type:** RP
**Manufacturer:** Febco
**Model:** 825YAR
**Size:** 3/4
**Orientation:** VUH
**Meters:**
**Manual:** 8
**0.25% Pb:** No
**Spare Parts Only:** Yes
**Approved:** 22-Jan-1993
**Renewed:** 22-Jan-2017
**Bypass:**
**Shutoffs:** ii,fff,jjj,ooo


2018 © University of Southern California

**Type:** RP
**Size:** 3/4
**Manual:** 8
**Approved:** 22-Jan-1993
**Shutoffs:** ii,fff,jjj,ooo
**Manufacturer:** Febco
**Orientation:** VUVD
**0.25% Pb:** No
**Renewed:** 22-Jan-2017
**Model:** 825YAR
**Meters:**
**Spare Parts Only:** Yes
**Bypass:**

---

**Type:** RP
**Size:** 1
**Manual:** 8
**Approved:** 21-Jan-1993
**Shutoffs:** ii,fff,jjj,ooo
**Manufacturer:** Febco
**Orientation:** H
**0.25% Pb:** No
**Renewed:** 21-Jan-2017
**Model:** 825YAR
**Meters:**
**Spare Parts Only:** Yes
**Bypass:**

---

**Type:** RP
**Size:** 1
**Manual:** 8
**Approved:** 21-Jan-1993
**Shutoffs:** ii,fff,jjj,ooo
**Manufacturer:** Febco
**Orientation:** HVD
**0.25% Pb:** No
**Renewed:** 21-Jan-2017
**Model:** 825YAR
**Meters:**
**Spare Parts Only:** Yes
**Bypass:**

---

**Type:** RP
**Size:** 1
**Manual:** 8
**Approved:** 21-Jan-1993
**Shutoffs:** ii,fff,jjj,ooo
**Manufacturer:** Febco
**Orientation:** VUH
**0.25% Pb:** No
**Renewed:** 21-Jan-2017
**Model:** 825YAR
**Meters:**
**Spare Parts Only:** Yes
**Bypass:**

---

**Type:** RP
**Size:** 1
**Manual:** 8
**Approved:** 21-Jan-1993
**Shutoffs:** ii,fff,jjj,ooo
**Manufacturer:** Febco
**Orientation:** VUVD
**0.25% Pb:** No
**Renewed:** 21-Jan-2017
**Model:** 825YAR
**Meters:**
**Spare Parts Only:** Yes
**Bypass:**

---

**Type:** RP
**Size:** 1 1/2
**Manual:** 8
**Approved:** 19-Aug-1993
**Shutoffs:** ii,fff,jjj,ooo
**Manufacturer:** Febco
**Orientation:** H
**0.25% Pb:** No
**Renewed:** 19-Aug-2017
**Model:** 825YAR
**Meters:**
**Spare Parts Only:** Yes
**Bypass:**

---

**Type:** RP
**Size:** 1 1/2
**Manual:** 8
**Approved:** 19-Aug-1993
**Shutoffs:** ii,fff,jjj,ooo
**Manufacturer:** Febco
**Orientation:** HVD
**0.25% Pb:** No
**Renewed:** 19-Aug-2017
**Model:** 825YAR
**Meters:**
**Spare Parts Only:** Yes
**Bypass:**

**Type:** RP
**Manufacturer:** Febco
**Model:** 825YAR
**Size:** 1 1/2
**Orientation:** VUH
**Meters:**
**Manual:** 8
**0.25% Pb:** No
**Spare Parts Only:** Yes
**Approved:** 19-Aug-1993
**Renewed:** 19-Aug-2017
**Bypass:**
**Shutoffs:** ii,fff,jjj,ooo

---

**Type:** RP
**Manufacturer:** Febco
**Model:** 825YAR
**Size:** 1 1/2
**Orientation:** VUVD
**Meters:**
**Manual:** 8
**0.25% Pb:** No
**Spare Parts Only:** Yes
**Approved:** 19-Aug-1993
**Renewed:** 19-Aug-2017
**Bypass:**
**Shutoffs:** ii,fff,jjj,ooo

---

**Type:** RP
**Manufacturer:** Febco
**Model:** 825YAR
**Size:** 2
**Orientation:** H
**Meters:**
**Manual:** 8
**0.25% Pb:** No
**Spare Parts Only:** Yes
**Approved:** 19-Aug-1993
**Renewed:** 19-Aug-2017
**Bypass:**
**Shutoffs:** ii,fff,ooo

---

**Type:** RP
**Manufacturer:** Febco
**Model:** 825YAR
**Size:** 2
**Orientation:** HVD
**Meters:**
**Manual:** 8
**0.25% Pb:** No
**Spare Parts Only:** Yes
**Approved:** 19-Aug-1993
**Renewed:** 19-Aug-2017
**Bypass:**
**Shutoffs:** ii,fff,ooo

---

**Type:** RP
**Manufacturer:** Febco
**Model:** 825YAR
**Size:** 2
**Orientation:** VUH
**Meters:**
**Manual:** 8
**0.25% Pb:** No
**Spare Parts Only:** Yes
**Approved:** 19-Aug-1993
**Renewed:** 19-Aug-2017
**Bypass:**
**Shutoffs:** ii,fff,ooo

---

**Type:** RP
**Manufacturer:** Febco
**Model:** 825YAR
**Size:** 2
**Orientation:** VUVD
**Meters:**
**Manual:** 8
**0.25% Pb:** No
**Spare Parts Only:** Yes
**Approved:** 19-Aug-1993
**Renewed:** 19-Aug-2017
**Bypass:**
**Shutoffs:** ii,fff,ooo

---

**Type:** RP
**Manufacturer:** Febco
**Model:** 825YD
**Size:** 2 1/2
**Orientation:** H
**Meters:**
**Manual:** 7
**0.25% Pb:** No
**Spare Parts Only:** Yes
**Approved:** 24-Feb-1989
**Renewed:** 24-Feb-2016
**Bypass:**
**Shutoffs:** (ee),ff,ll,mm,oo,pp,tt,uu,zzz,ffff,gggg


2018 © University of Southern California

**Type:** RP **Manufacturer:** Febco **Model:** 825YD
**Size:** 3 **Orientation:** H **Meters:**
**Manual:** 7 **0.25% Pb:** No **Spare Parts Only:** Yes
**Approved:** 24-Feb-1989 **Renewed:** 24-Feb-2016 **Bypass:**
**Shutoffs:** (ee),ff,ll,mm,oo,pp,tt,uu,zzz,ffff,gggg

---

**Type:** RP **Manufacturer:** Febco **Model:** 825YD
**Size:** 4 **Orientation:** H **Meters:**
**Manual:** 7 **0.25% Pb:** No **Spare Parts Only:** Yes
**Approved:** 24-Feb-1989 **Renewed:** 24-Feb-2016 **Bypass:**
**Shutoffs:** (ee),ff,ll,mm,oo,pp,tt,uu,zzz,ffff,gggg

---

**Type:** RP **Manufacturer:** Febco **Model:** 825YD
**Size:** 6 **Orientation:** H **Meters:**
**Manual:** 7 **0.25% Pb:** No **Spare Parts Only:** Yes
**Approved:** 24-Feb-1989 **Renewed:** 24-Feb-2016 **Bypass:**
**Shutoffs:** (ee),ff,ll,mm,oo,pp,tt,uu,zzz,ffff,gggg

---

**Type:** RP **Manufacturer:** Febco **Model:** 825YD
**Size:** 8 **Orientation:** H **Meters:**
**Manual:** 7 **0.25% Pb:** No **Spare Parts Only:** Yes
**Approved:** 24-Feb-1989 **Renewed:** 24-Feb-2016 **Bypass:**
**Shutoffs:** (ee),ff,ll,mm,oo,pp,tt,uu,zzz,ffff,gggg

---

**Type:** RP **Manufacturer:** Febco **Model:** 825YD
**Size:** 10 **Orientation:** H **Meters:**
**Manual:** 7 **0.25% Pb:** No **Spare Parts Only:** Yes
**Approved:** 24-Feb-1989 **Renewed:** 24-Feb-2016 **Bypass:**
**Shutoffs:** (ee),ff,ll,mm,oo,pp,tt,uu,zzz,ffff,gggg

---

**Type:** RP **Manufacturer:** Febco **Model:** 825YR
**Size:** 3/4 **Orientation:** H **Meters:**
**Manual:** 8 **0.25% Pb:** No **Spare Parts Only:** Yes
**Approved:** 22-Jan-1993 **Renewed:** 22-Jan-2017 **Bypass:**
**Shutoffs:** ii,fff,jjj

---

**Type:** RP **Manufacturer:** Febco **Model:** 825YR
**Size:** 1 **Orientation:** H **Meters:**
**Manual:** 8 **0.25% Pb:** No **Spare Parts Only:** Yes
**Approved:** 22-Jan-1993 **Renewed:** 22-Jan-2017 **Bypass:**
**Shutoffs:** ii,fff,jjj

**Type:** RP
**Size:** 1 1/2
**Manual:** 8
**Approved:** 23-Jul-1993
**Shutoffs:** ii,fff,jjj

**Manufacturer:** Febco
**Orientation:** H
**0.25% Pb:** No
**Renewed:** 23-Jul-2017

**Model:** 825YR
**Meters:**
**Spare Parts Only:** Yes
**Bypass:**

---

**Type:** RP
**Size:** 2
**Manual:** 8
**Approved:** 23-Jul-1993
**Shutoffs:** ii,fff

**Manufacturer:** Febco
**Orientation:** H
**0.25% Pb:** No
**Renewed:** 23-Jul-2017

**Model:** 825YR
**Meters:**
**Spare Parts Only:** Yes
**Bypass:**

---

**Type:** RP
**Size:** 1/2
**Manual:** 9
**Approved:** 09-Apr-1998
**Shutoffs:** (fff),ooo

**Manufacturer:** Febco
**Orientation:** H
**0.25% Pb:** No
**Renewed:** 09-Apr-2016

**Model:** 860
**Meters:**
**Spare Parts Only:** No
**Bypass:**

---

**Type:** RP
**Size:** 3/4
**Manual:** 9
**Approved:** 21-Nov-1997
**Shutoffs:** (fff),jjj,ooo

**Manufacturer:** Febco
**Orientation:** H
**0.25% Pb:** No
**Renewed:** 21-Nov-2015

**Model:** 860
**Meters:**
**Spare Parts Only:** No
**Bypass:**

---

**Type:** RP
**Size:** 1
**Manual:** 9
**Approved:** 21-Nov-1997
**Shutoffs:** (fff),jjj,ooo

**Manufacturer:** Febco
**Orientation:** H
**0.25% Pb:** No
**Renewed:** 21-Nov-2015

**Model:** 860
**Meters:**
**Spare Parts Only:** No
**Bypass:**

---

**Type:** RP
**Size:** 1 1/4
**Manual:** 9
**Approved:** 04-Jun-1998
**Shutoffs:** (fff),jjj,ooo

**Manufacturer:** Febco
**Orientation:** H
**0.25% Pb:** No
**Renewed:** 04-Jun-2016

**Model:** 860
**Meters:**
**Spare Parts Only:** No
**Bypass:**

---

**Type:** RP
**Size:** 1 1/2
**Manual:** 9
**Approved:** 09-Apr-1998
**Shutoffs:** (fff),jjj,ooo

**Manufacturer:** Febco
**Orientation:** H
**0.25% Pb:** No
**Renewed:** 09-Apr-2016

**Model:** 860
**Meters:**
**Spare Parts Only:** No
**Bypass:**


2018 © University of Southern California

**Type:** RP
**Manufacturer:** Febco
**Model:** 860
**Size:** 2
**Orientation:** H
**Meters:**
**Manual:** 9
**0.25% Pb:** No
**Spare Parts Only:** Yes
**Approved:** 09-Apr-1998
**Renewed:** 09-Apr-2016
**Bypass:**
**Shutoffs:** (fff),ooo

---

**Type:** RP
**Manufacturer:** Febco
**Model:** 860
**Size:** 2 1/2
**Orientation:** H
**Meters:**
**Manual:** 8
**0.25% Pb:** No
**Spare Parts Only:** Yes
**Approved:** 19-Apr-1996
**Renewed:** 19-Apr-2017
**Bypass:**
**Shutoffs:** (ee),ff,ll,mm,oo,pp,tt,uu.zzz,cccc,ffff,gggg

---

**Type:** RP
**Manufacturer:** Febco
**Model:** 860
**Size:** 3
**Orientation:** H
**Meters:**
**Manual:** 8
**0.25% Pb:** No
**Spare Parts Only:** Yes
**Approved:** 19-Apr-1996
**Renewed:** 19-Apr-2017
**Bypass:**
**Shutoffs:** (ee),ff,ll,mm,oo,pp,tt,uu.zzz,cccc,ffff,gggg

---

**Type:** RP
**Manufacturer:** Febco
**Model:** 860
**Size:** 4
**Orientation:** H
**Meters:**
**Manual:** 8
**0.25% Pb:** No
**Spare Parts Only:** Yes
**Approved:** 31-May-1995
**Renewed:** 31-May-2016
**Bypass:**
**Shutoffs:** (ee),ff,ll,mm,oo,pp,tt,uu,nnn,zzz,cccc,ffff,gggg

---

**Type:** RP
**Manufacturer:** Febco
**Model:** 860
**Size:** 6
**Orientation:** H
**Meters:**
**Manual:** 8
**0.25% Pb:** No
**Spare Parts Only:** Yes
**Approved:** 07-Aug-1995
**Renewed:** 07-Aug-2016
**Bypass:**
**Shutoffs:** (ee),ff,ll,mm,oo,pp,tt,uu,nnn,zzz,cccc,ffff,gggg

---

**Type:** RP
**Manufacturer:** Febco
**Model:** 860
**Size:** 8
**Orientation:** H
**Meters:**
**Manual:** 8
**0.25% Pb:** No
**Spare Parts Only:** Yes
**Approved:** 04-Oct-1995
**Renewed:** 04-Oct-2016
**Bypass:**
**Shutoffs:** (ee),ff,ll,mm,oo,pp,tt,uu,nnn,zzz,cccc,ffff,gggg

---

**Type:** RP
**Manufacturer:** Febco
**Model:** 860U
**Size:** 1/2
**Orientation:** H
**Meters:**
**Manual:** 9
**0.25% Pb:** No
**Spare Parts Only:** No
**Approved:** 12-Oct-1998
**Renewed:** 12-Oct-2016
**Bypass:**
**Shutoffs:** (kkk)

**Type:** RP
**Manufacturer:** Febco
**Model:** 860U
**Size:** 3/4
**Orientation:** H
**Meters:**
**Manual:** 9
**0.25% Pb:** No
**Spare Parts Only:** No
**Approved:** 12-Oct-1998
**Renewed:** 12-Oct-2016
**Bypass:**
**Shutoffs:** (kkk)

---

**Type:** RP
**Manufacturer:** Febco
**Model:** 860U
**Size:** 1
**Orientation:** H
**Meters:**
**Manual:** 9
**0.25% Pb:** No
**Spare Parts Only:** No
**Approved:** 12-Oct-1998
**Renewed:** 12-Oct-2016
**Bypass:**
**Shutoffs:** (kkk)

---

**Type:** RP
**Manufacturer:** Febco
**Model:** 860U
**Size:** 1 1/4
**Orientation:** H
**Meters:**
**Manual:** 9
**0.25% Pb:** No
**Spare Parts Only:** No
**Approved:** 12-Oct-1998
**Renewed:** 12-Oct-2016
**Bypass:**
**Shutoffs:** (kkk)

---

**Type:** RP
**Manufacturer:** Febco
**Model:** 860U
**Size:** 1 1/2
**Orientation:** H
**Meters:**
**Manual:** 9
**0.25% Pb:** No
**Spare Parts Only:** No
**Approved:** 12-Oct-1998
**Renewed:** 12-Oct-2016
**Bypass:**
**Shutoffs:** (kkk)

---

**Type:** RP
**Manufacturer:** Febco
**Model:** 860U
**Size:** 2
**Orientation:** H
**Meters:**
**Manual:** 9
**0.25% Pb:** No
**Spare Parts Only:** No
**Approved:** 12-Oct-1998
**Renewed:** 12-Oct-2016
**Bypass:**
**Shutoffs:** (kkk)

---

**Type:** RP
**Manufacturer:** Febco
**Model:** 867
**Size:** 2 1/2
**Orientation:** H
**Meters:**
**Manual:** 8
**0.25% Pb:** No
**Spare Parts Only:** Yes
**Approved:** 01-Aug-2006
**Renewed:** 01-Aug-2018
**Bypass:**
**Shutoffs:** (oo), gg, hh,ll, mm, pp, tt, uu, yy, fff

---

**Type:** RP
**Manufacturer:** Febco
**Model:** 867
**Size:** 3
**Orientation:** H
**Meters:**
**Manual:** 8
**0.25% Pb:** No
**Spare Parts Only:** Yes
**Approved:** 01-Aug-2006
**Renewed:** 01-Aug-2018
**Bypass:**
**Shutoffs:** (oo), gg, hh,ll, mm, pp, tt, uu, yy, eee, fff


2018 © University of Southern California

**Type:** RP **Manufacturer:** Febco **Model:** 880
**Size:** 2 1/2 **Orientation:** VUVD **Meters:**
**Manual:** 8 **0.25% Pb:** No **Spare Parts Only:** Yes
**Approved:** 24-May-1995 **Renewed:** 24-May-2016 **Bypass:**
**Shutoffs:** ee,ff,ll,mm,oo,pp,tt,uu,zzz,ffff,gggg

---

**Type:** RP **Manufacturer:** Febco **Model:** 880
**Size:** 3 **Orientation:** VUVD **Meters:**
**Manual:** 8 **0.25% Pb:** No **Spare Parts Only:** Yes
**Approved:** 24-May-1995 **Renewed:** 24-May-2016 **Bypass:**
**Shutoffs:** ee,ff,ll,mm,oo,pp,tt,uu,zzz,ffff,gggg

---

**Type:** RP **Manufacturer:** Febco **Model:** 880
**Size:** 4 **Orientation:** VUVD **Meters:**
**Manual:** 8 **0.25% Pb:** No **Spare Parts Only:** Yes
**Approved:** 10-Mar-1995 **Renewed:** 10-Mar-2016 **Bypass:**
**Shutoffs:** ee,ff,ll,mm,oo,pp,tt,uu,zzz,ffff,gggg

---

**Type:** RP **Manufacturer:** Febco **Model:** 880
**Size:** 6 **Orientation:** VUVD **Meters:**
**Manual:** 8 **0.25% Pb:** No **Spare Parts Only:** Yes
**Approved:** 19-May-1995 **Renewed:** 19-May-2016 **Bypass:**
**Shutoffs:** ee,ff,ll,mm,oo,pp,tt,uu,zzz,ffff,gggg

---

**Type:** RP **Manufacturer:** Febco **Model:** 880
**Size:** 8 **Orientation:** VUVD **Meters:**
**Manual:** 8 **0.25% Pb:** No **Spare Parts Only:** Yes
**Approved:** 19-May-1995 **Renewed:** 19-May-2016 **Bypass:**
**Shutoffs:** ee,ff,ll,mm,oo,pp,tt,uu,zzz,ffff,gggg

---

**Type:** RP **Manufacturer:** Febco **Model:** 880
**Size:** 10 **Orientation:** VUVD **Meters:**
**Manual:** 8 **0.25% Pb:** No **Spare Parts Only:** Yes
**Approved:** 04-Oct-1996 **Renewed:** 04-Oct-2017 **Bypass:**
**Shutoffs:** ee,ff,ll,mm,oo,pp,tt,uu,zzz,ffff,gggg

---

**Type:** RP **Manufacturer:** Febco **Model:** 880V
**Size:** 2 1/2 **Orientation:** VUVD **Meters:**
**Manual:** 8 **0.25% Pb:** No **Spare Parts Only:** Yes
**Approved:** 30-Jun-1995 **Renewed:** 30-Jun-2016 **Bypass:**
**Shutoffs:** (ee),ff,ll,mm,oo,pp,tt,uu,nnn,zzz,cccc,ffff,gggg

**Type:** RP **Manufacturer:** Febco **Model:** 880V
**Size:** 2 1/2 **Orientation:** VUVU **Meters:**
**Manual:** 8 **0.25% Pb:** No **Spare Parts Only:** Yes
**Approved:** 30-Jun-1995 **Renewed:** 30-Jun-2016 **Bypass:**
**Shutoffs:** (ee),ff,ll,mm,oo,pp,tt,uu,nnn,zzz,cccc,ffff,gggg

---

**Type:** RP **Manufacturer:** Febco **Model:** 880V
**Size:** 3 **Orientation:** VUVD **Meters:**
**Manual:** 8 **0.25% Pb:** No **Spare Parts Only:** Yes
**Approved:** 30-Jun-1995 **Renewed:** 30-Jun-2016 **Bypass:**
**Shutoffs:** (ee),ff,ll,mm,oo,pp,tt,uu,nnn,zzz,cccc,ffff,gggg

---

**Type:** RP **Manufacturer:** Febco **Model:** 880V
**Size:** 3 **Orientation:** VUVU **Meters:**
**Manual:** 8 **0.25% Pb:** No **Spare Parts Only:** Yes
**Approved:** 30-Jun-1995 **Renewed:** 30-Jun-2016 **Bypass:**
**Shutoffs:** (ee),ff,ll,mm,oo,pp,tt,uu,nnn,zzz,cccc,ffff,gggg

---

**Type:** RP **Manufacturer:** Febco **Model:** 880V
**Size:** 4 **Orientation:** VUVD **Meters:**
**Manual:** 8 **0.25% Pb:** No **Spare Parts Only:** Yes
**Approved:** 08-Aug-1995 **Renewed:** 08-Aug-2016 **Bypass:**
**Shutoffs:** (ee),ff,ll,mm,oo,pp,tt,uu,nnn,zzz,cccc,ffff,gggg

---

**Type:** RP **Manufacturer:** Febco **Model:** 880V
**Size:** 4 **Orientation:** VUVU **Meters:**
**Manual:** 8 **0.25% Pb:** No **Spare Parts Only:** Yes
**Approved:** 08-Aug-1995 **Renewed:** 08-Aug-2016 **Bypass:**
**Shutoffs:** (ee),ff,ll,mm,oo,pp,tt,uu,nnn,zzz,cccc,ffff,gggg

---

**Type:** RP **Manufacturer:** Febco **Model:** 880V
**Size:** 6 **Orientation:** VUVD **Meters:**
**Manual:** 8 **0.25% Pb:** No **Spare Parts Only:** Yes
**Approved:** 05-Jul-1995 **Renewed:** 05-Jul-2016 **Bypass:**
**Shutoffs:** (ee),ff,ll,mm,oo,pp,tt,uu,nnn,zzz,cccc,ffff,gggg

---

**Type:** RP **Manufacturer:** Febco **Model:** 880V
**Size:** 6 **Orientation:** VUVU **Meters:**
**Manual:** 8 **0.25% Pb:** No **Spare Parts Only:** Yes
**Approved:** 05-Jul-1995 **Renewed:** 05-Jul-2016 **Bypass:**
**Shutoffs:** (ee),ff,ll,mm,oo,pp,tt,uu,nnn,zzz,cccc,ffff,gggg


2018 © University of Southern California

**Type:** RP
**Manufacturer:** Febco
**Model:** 880V
**Size:** 8
**Orientation:** VUVD
**Meters:**
**Manual:** 8
**0.25% Pb:** No
**Spare Parts Only:** Yes
**Approved:** 18-Dec-1996
**Renewed:** 18-Dec-2017
**Bypass:**
**Shutoffs:** (ee),ff,ll,mm,oo,pp,tt,uu,nnn,zzz,cccc,ffff,gggg

---

**Type:** RP
**Manufacturer:** Febco
**Model:** 880V
**Size:** 8
**Orientation:** VUVU
**Meters:**
**Manual:** 8
**0.25% Pb:** No
**Spare Parts Only:** Yes
**Approved:** 18-Dec-1996
**Renewed:** 18-Dec-2017
**Bypass:**
**Shutoffs:** (ee),ff,ll,mm,oo,pp,tt,uu,nnn,zzz,cccc,ffff,gggg

---

**Type:** RP
**Manufacturer:** Febco
**Model:** 880V
**Size:** 10
**Orientation:** VUVD
**Meters:**
**Manual:** 8
**0.25% Pb:** No
**Spare Parts Only:** Yes
**Approved:** 17-Jun-1997
**Renewed:** 17-Jun-2018
**Bypass:**
**Shutoffs:** (ee),ff,ll,mm,oo,pp,tt,uu,nnn,zzz,cccc,ffff,gggg

---

**Type:** RP
**Manufacturer:** Febco
**Model:** 880V
**Size:** 10
**Orientation:** VUVU
**Meters:**
**Manual:** 8
**0.25% Pb:** No
**Spare Parts Only:** Yes
**Approved:** 17-Jun-1997
**Renewed:** 17-Jun-2018
**Bypass:**
**Shutoffs:** (ee),ff,ll,mm,oo,pp,tt,uu,nnn,zzz,cccc,ffff,gggg

---

**Type:** RP
**Manufacturer:** Febco
**Model:** LF825Y
**Size:** 3/4
**Orientation:** H
**Meters:**
**Manual:** 8
**0.25% Pb:** Yes
**Spare Parts Only:** No
**Approved:** 18-Feb-2010
**Renewed:** 18-Feb-2016
**Bypass:**
**Shutoffs:** (qqqqq), hhhh

---

**Type:** RP
**Manufacturer:** Febco
**Model:** LF825Y
**Size:** 1
**Orientation:** H
**Meters:**
**Manual:** 8
**0.25% Pb:** Yes
**Spare Parts Only:** No
**Approved:** 18-Feb-2010
**Renewed:** 18-Feb-2016
**Bypass:**
**Shutoffs:** (qqqqq), hhhh

---

**Type:** RP
**Manufacturer:** Febco
**Model:** LF825Y
**Size:** 1 1/2
**Orientation:** H
**Meters:**
**Manual:** 8
**0.25% Pb:** Yes
**Spare Parts Only:** No
**Approved:** 25-Mar-2010
**Renewed:** 25-Mar-2016
**Bypass:**
**Shutoffs:** (qqqqq), hhhh

**Type:** RP
**Size:** 2
**Manual:** 8
**Approved:** 25-Mar-2010
**Shutoffs:** (qqqqq), hhhh
**Manufacturer:** Febco
**Orientation:** H
**0.25% Pb:** Yes
**Renewed:** 25-Mar-2016
**Model:** LF825Y
**Meters:**
**Spare Parts Only:** No
**Bypass:**

---

**Type:** RP
**Size:** 3/4
**Manual:** 8
**Approved:** 18-Feb-2010
**Shutoffs:** (qqqqq), hhhh
**Manufacturer:** Febco
**Orientation:** H
**0.25% Pb:** Yes
**Renewed:** 18-Feb-2016
**Model:** LF825YA
**Meters:**
**Spare Parts Only:** No
**Bypass:**

---

**Type:** RP
**Size:** 3/4
**Manual:** 8
**Approved:** 18-Feb-2010
**Shutoffs:** (qqqqq), hhhh
**Manufacturer:** Febco
**Orientation:** HVD
**0.25% Pb:** Yes
**Renewed:** 18-Feb-2016
**Model:** LF825YA
**Meters:**
**Spare Parts Only:** No
**Bypass:**

---

**Type:** RP
**Size:** 3/4
**Manual:** 8
**Approved:** 18-Feb-2010
**Shutoffs:** (qqqqq), hhhh
**Manufacturer:** Febco
**Orientation:** VUH
**0.25% Pb:** Yes
**Renewed:** 18-Feb-2016
**Model:** LF825YA
**Meters:**
**Spare Parts Only:** No
**Bypass:**

---

**Type:** RP
**Size:** 3/4
**Manual:** 8
**Approved:** 18-Feb-2010
**Shutoffs:** (qqqqq), hhhh
**Manufacturer:** Febco
**Orientation:** VUVD
**0.25% Pb:** Yes
**Renewed:** 18-Feb-2016
**Model:** LF825YA
**Meters:**
**Spare Parts Only:** No
**Bypass:**

---

**Type:** RP
**Size:** 1
**Manual:** 8
**Approved:** 18-Feb-2010
**Shutoffs:** (qqqqq), hhhh
**Manufacturer:** Febco
**Orientation:** H
**0.25% Pb:** Yes
**Renewed:** 18-Feb-2016
**Model:** LF825YA
**Meters:**
**Spare Parts Only:** No
**Bypass:**

---

**Type:** RP
**Size:** 1
**Manual:** 8
**Approved:** 18-Feb-2010
**Shutoffs:** (qqqqq), hhhh
**Manufacturer:** Febco
**Orientation:** HVD
**0.25% Pb:** Yes
**Renewed:** 18-Feb-2016
**Model:** LF825YA
**Meters:**
**Spare Parts Only:** No
**Bypass:**


2018 © University of Southern California

**Type:** RP
**Size:** 1
**Manual:** 8
**Approved:** 18-Feb-2010
**Shutoffs:** (qqqqq), hhhh
**Manufacturer:** Febco
**Orientation:** VUH
**0.25% Pb:** Yes
**Renewed:** 18-Feb-2016
**Model:** LF825YA
**Meters:**
**Spare Parts Only:** No
**Bypass:**

---

**Type:** RP
**Size:** 1
**Manual:** 8
**Approved:** 18-Feb-2010
**Shutoffs:** (qqqqq), hhhh
**Manufacturer:** Febco
**Orientation:** VUVD
**0.25% Pb:** Yes
**Renewed:** 18-Feb-2016
**Model:** LF825YA
**Meters:**
**Spare Parts Only:** No
**Bypass:**

---

**Type:** RP
**Size:** 1 1/2
**Manual:** 8
**Approved:** 25-Mar-2010
**Shutoffs:** (qqqqq), hhhh
**Manufacturer:** Febco
**Orientation:** H
**0.25% Pb:** Yes
**Renewed:** 25-Mar-2016
**Model:** LF825YA
**Meters:**
**Spare Parts Only:** No
**Bypass:**

---

**Type:** RP
**Size:** 1 1/2
**Manual:** 8
**Approved:** 25-Mar-2010
**Shutoffs:** (qqqqq), hhhh
**Manufacturer:** Febco
**Orientation:** HVD
**0.25% Pb:** Yes
**Renewed:** 25-Mar-2016
**Model:** LF825YA
**Meters:**
**Spare Parts Only:** No
**Bypass:**

---

**Type:** RP
**Size:** 1 1/2
**Manual:** 8
**Approved:** 25-Mar-2010
**Shutoffs:** (qqqqq), hhhh
**Manufacturer:** Febco
**Orientation:** VUH
**0.25% Pb:** Yes
**Renewed:** 25-Mar-2016
**Model:** LF825YA
**Meters:**
**Spare Parts Only:** No
**Bypass:**

---

**Type:** RP
**Size:** 1 1/2
**Manual:** 8
**Approved:** 25-Mar-2010
**Shutoffs:** (qqqqq), hhhh
**Manufacturer:** Febco
**Orientation:** VUVD
**0.25% Pb:** Yes
**Renewed:** 25-Mar-2016
**Model:** LF825YA
**Meters:**
**Spare Parts Only:** No
**Bypass:**

---

**Type:** RP
**Size:** 2
**Manual:** 8
**Approved:** 25-Mar-2010
**Shutoffs:** (qqqqq), hhhh
**Manufacturer:** Febco
**Orientation:** H
**0.25% Pb:** Yes
**Renewed:** 25-Mar-2016
**Model:** LF825YA
**Meters:**
**Spare Parts Only:** No
**Bypass:**

**Type:** RP
**Size:** 2
**Manual:** 8
**Approved:** 25-Mar-2010
**Shutoffs:** (qqqqq), hhhh
**Manufacturer:** Febco
**Orientation:** HVD
**0.25% Pb:** Yes
**Renewed:** 25-Mar-2016
**Model:** LF825YA
**Meters:**
**Spare Parts Only:** No
**Bypass:**

---

**Type:** RP
**Size:** 2
**Manual:** 8
**Approved:** 25-Mar-2010
**Shutoffs:** (qqqqq), hhhh
**Manufacturer:** Febco
**Orientation:** VUH
**0.25% Pb:** Yes
**Renewed:** 25-Mar-2016
**Model:** LF825YA
**Meters:**
**Spare Parts Only:** No
**Bypass:**

---

**Type:** RP
**Size:** 2
**Manual:** 8
**Approved:** 25-Mar-2010
**Shutoffs:** (qqqqq), hhhh
**Manufacturer:** Febco
**Orientation:** VUVD
**0.25% Pb:** Yes
**Renewed:** 25-Mar-2016
**Model:** LF825YA
**Meters:**
**Spare Parts Only:** No
**Bypass:**

---

**Type:** RP
**Size:** 1/2
**Manual:** 9
**Approved:** 18-Feb-2010
**Shutoffs:** (qqqqq), hhhh
**Manufacturer:** Febco
**Orientation:** H
**0.25% Pb:** Yes
**Renewed:** 18-Feb-2016
**Model:** LF860
**Meters:**
**Spare Parts Only:** No
**Bypass:**

---

**Type:** RP
**Size:** 3/4
**Manual:** 9
**Approved:** 18-Feb-2010
**Shutoffs:** (qqqqq), hhhh
**Manufacturer:** Febco
**Orientation:** H
**0.25% Pb:** Yes
**Renewed:** 18-Feb-2016
**Model:** LF860
**Meters:**
**Spare Parts Only:** No
**Bypass:**

---

**Type:** RP
**Size:** 1
**Manual:** 9
**Approved:** 18-Feb-2010
**Shutoffs:** (qqqqq), hhhh
**Manufacturer:** Febco
**Orientation:** H
**0.25% Pb:** Yes
**Renewed:** 18-Feb-2016
**Model:** LF860
**Meters:**
**Spare Parts Only:** No
**Bypass:**

---

**Type:** RP
**Size:** 1 1/4
**Manual:** 9
**Approved:** 18-Feb-2010
**Shutoffs:** (qqqqq), hhhh
**Manufacturer:** Febco
**Orientation:** H
**0.25% Pb:** Yes
**Renewed:** 18-Feb-2016
**Model:** LF860
**Meters:**
**Spare Parts Only:** No
**Bypass:**


2018 © University of Southern California

**Type:** RP
**Manufacturer:** Febco
**Model:** LF860
**Size:** 1 1/2
**Orientation:** H
**Meters:**
**Manual:** 9
**0.25% Pb:** Yes
**Spare Parts Only:** No
**Approved:** 18-Feb-2010
**Renewed:** 18-Feb-2016
**Bypass:**
**Shutoffs:** (qqqqq), hhhh

---

**Type:** RP
**Manufacturer:** Febco
**Model:** LF860
**Size:** 2
**Orientation:** H
**Meters:**
**Manual:** 9
**0.25% Pb:** Yes
**Spare Parts Only:** No
**Approved:** 18-Feb-2010
**Renewed:** 18-Feb-2016
**Bypass:**
**Shutoffs:** (qqqqq), hhhh

---

**Type:** RP
**Manufacturer:** Febco
**Model:** LF860
**Size:** 2 1/2
**Orientation:** H
**Meters:**
**Manual:** 9
**0.25% Pb:** Yes
**Spare Parts Only:** No
**Approved:** 28-May-2013
**Renewed:** 28-May-2016
**Bypass:**
**Shutoffs:** (ll),mm,oo,pp,zzz,cccc,dddd,eeee,ffff,gggg,nnnnn

---

**Type:** RP
**Manufacturer:** Febco
**Model:** LF860
**Size:** 3
**Orientation:** H
**Meters:**
**Manual:** 9
**0.25% Pb:** Yes
**Spare Parts Only:** No
**Approved:** 28-May-2013
**Renewed:** 28-May-2016
**Bypass:**
**Shutoffs:** (ll),mm,oo,pp,zzz,cccc,dddd,eeee,ffff,gggg,nnnnn

---

**Type:** RP
**Manufacturer:** Febco
**Model:** LF860
**Size:** 4
**Orientation:** H
**Meters:**
**Manual:** 9
**0.25% Pb:** Yes
**Spare Parts Only:** No
**Approved:** 14-Jun-2013
**Renewed:** 14-Jun-2016
**Bypass:**
**Shutoffs:** (ll),mm,oo,pp,zzz,cccc,dddd,eeee,ffff,gggg,nnnnn

---

**Type:** RP
**Manufacturer:** Febco
**Model:** LF860
**Size:** 6
**Orientation:** H
**Meters:**
**Manual:** 9
**0.25% Pb:** Yes
**Spare Parts Only:** No
**Approved:** 14-Jun-2013
**Renewed:** 14-Jun-2016
**Bypass:**
**Shutoffs:** (ll),mm,oo,pp,zzz,cccc,dddd,eeee,ffff,gggg,nnnnn

---

**Type:** RP
**Manufacturer:** Febco
**Model:** LF860
**Size:** 8
**Orientation:** H
**Meters:**
**Manual:** 9
**0.25% Pb:** Yes
**Spare Parts Only:** No
**Approved:** 03-Sep-2013
**Renewed:** 03-Sep-2016
**Bypass:**
**Shutoffs:** (ll),mm,oo,pp,zzz,cccc,dddd,eeee,ffff,gggg,nnnnn

**Type:** RP
**Manufacturer:** Febco
**Model:** LF860
**Size:** 10
**Orientation:** H
**Meters:**
**Manual:** 9
**0.25% Pb:** Yes
**Spare Parts Only:** No
**Approved:** 25-Sep-2013
**Renewed:** 25-Sep-2016
**Bypass:**
**Shutoffs:** (ll),mm,oo,pp,zzz,cccc,dddd,eeee,ffff,gggg,nnnnn

---

**Type:** RP
**Manufacturer:** Febco
**Model:** LF860U
**Size:** 1/2
**Orientation:** H
**Meters:**
**Manual:** 9
**0.25% Pb:** Yes
**Spare Parts Only:** No
**Approved:** 03-Sep-2013
**Renewed:** 03-Sep-2016
**Bypass:**
**Shutoffs:** (ppppp), hhhh

---

**Type:** RP
**Manufacturer:** Febco
**Model:** LF860U
**Size:** 3/4
**Orientation:** H
**Meters:**
**Manual:** 9
**0.25% Pb:** Yes
**Spare Parts Only:** No
**Approved:** 03-Sep-2013
**Renewed:** 03-Sep-2016
**Bypass:**
**Shutoffs:** (ppppp), hhhh

---

**Type:** RP
**Manufacturer:** Febco
**Model:** LF860U
**Size:** 1
**Orientation:** H
**Meters:**
**Manual:** 9
**0.25% Pb:** Yes
**Spare Parts Only:** No
**Approved:** 03-Sep-2013
**Renewed:** 03-Sep-2016
**Bypass:**
**Shutoffs:** (ppppp), hhhh

---

**Type:** RP
**Manufacturer:** Febco
**Model:** LF860U
**Size:** 1 1/4
**Orientation:** H
**Meters:**
**Manual:** 9
**0.25% Pb:** Yes
**Spare Parts Only:** No
**Approved:** 03-Sep-2013
**Renewed:** 03-Sep-2016
**Bypass:**
**Shutoffs:** (ppppp), hhhh

---

**Type:** RP
**Manufacturer:** Febco
**Model:** LF860U
**Size:** 1 1/2
**Orientation:** H
**Meters:**
**Manual:** 9
**0.25% Pb:** Yes
**Spare Parts Only:** No
**Approved:** 03-Sep-2013
**Renewed:** 03-Sep-2016
**Bypass:**
**Shutoffs:** (ppppp), hhhh

---

**Type:** RP
**Manufacturer:** Febco
**Model:** LF860U
**Size:** 2
**Orientation:** H
**Meters:**
**Manual:** 9
**0.25% Pb:** Yes
**Spare Parts Only:** No
**Approved:** 03-Sep-2013
**Renewed:** 03-Sep-2016
**Bypass:**
**Shutoffs:** (ppppp), hhhh


2018 © University of Southern California

**Type:** RP **Manufacturer:** Febco **Model:** LF880V
**Size:** 2 1/2 **Orientation:** VUVD **Meters:**
**Manual:** 9 **0.25% Pb:** Yes **Spare Parts Only:** No
**Approved:** 28-May-2013 **Renewed:** 28-May-2016 **Bypass:**
**Shutoffs:** (ll),mm,oo,pp,zzz,cccc,dddd,eeee,ffff,gggg,nnnnn

---

**Type:** RP **Manufacturer:** Febco **Model:** LF880V
**Size:** 2 1/2 **Orientation:** VUVU **Meters:**
**Manual:** 9 **0.25% Pb:** Yes **Spare Parts Only:** No
**Approved:** 28-May-2013 **Renewed:** 28-May-2016 **Bypass:**
**Shutoffs:** (ll),mm,oo,pp,zzz,cccc,dddd,eeee,ffff,gggg,nnnnn

---

**Type:** RP **Manufacturer:** Febco **Model:** LF880V
**Size:** 3 **Orientation:** VUVD **Meters:**
**Manual:** 9 **0.25% Pb:** Yes **Spare Parts Only:** No
**Approved:** 28-May-2013 **Renewed:** 28-May-2016 **Bypass:**
**Shutoffs:** (ll),mm,oo,pp,zzz,cccc,dddd,eeee,ffff,gggg,nnnnn

---

**Type:** RP **Manufacturer:** Febco **Model:** LF880V
**Size:** 3 **Orientation:** VUVU **Meters:**
**Manual:** 9 **0.25% Pb:** Yes **Spare Parts Only:** No
**Approved:** 28-May-2013 **Renewed:** 28-May-2016 **Bypass:**
**Shutoffs:** (ll),mm,oo,pp,zzz,cccc,dddd,eeee,ffff,gggg,nnnnn

---

**Type:** RP **Manufacturer:** Febco **Model:** LF880V
**Size:** 4 **Orientation:** VUVD **Meters:**
**Manual:** 9 **0.25% Pb:** Yes **Spare Parts Only:** No
**Approved:** 28-May-2013 **Renewed:** 28-May-2016 **Bypass:**
**Shutoffs:** (ll),mm,oo,pp,zzz,cccc,dddd,eeee,ffff,gggg,nnnnn

---

**Type:** RP **Manufacturer:** Febco **Model:** LF880V
**Size:** 4 **Orientation:** VUVU **Meters:**
**Manual:** 9 **0.25% Pb:** Yes **Spare Parts Only:** No
**Approved:** 28-May-2013 **Renewed:** 28-May-2016 **Bypass:**
**Shutoffs:** (ll),mm,oo,pp,zzz,cccc,dddd,eeee,ffff,gggg,nnnnn

---

**Type:** RP **Manufacturer:** Febco **Model:** LF880V
**Size:** 6 **Orientation:** VUVD **Meters:**
**Manual:** 9 **0.25% Pb:** Yes **Spare Parts Only:** No
**Approved:** 03-Sep-2013 **Renewed:** 03-Sep-2016 **Bypass:**
**Shutoffs:** (ll),mm,oo,pp,zzz,cccc,dddd,eeee,ffff,gggg,nnnnn

**Type:** RP **Manufacturer:** Febco **Model:** LF880V
**Size:** 6 **Orientation:** VUVU **Meters:**
**Manual:** 9 **0.25% Pb:** Yes **Spare Parts Only:** No
**Approved:** 03-Sep-2013 **Renewed:** 03-Sep-2016 **Bypass:**
**Shutoffs:** (ll),mm,oo,pp,zzz,cccc,dddd,eeee,ffff,gggg,nnnnn

---

**Type:** RP **Manufacturer:** Febco **Model:** LF880V
**Size:** 8 **Orientation:** VUVD **Meters:**
**Manual:** 9 **0.25% Pb:** Yes **Spare Parts Only:** No
**Approved:** 26-Nov-2013 **Renewed:** 26-Nov-2016 **Bypass:**
**Shutoffs:** (ll),mm,oo,pp,zzz,cccc,dddd,eeee,ffff,gggg,nnnnn

---

**Type:** RP **Manufacturer:** Febco **Model:** LF880V
**Size:** 8 **Orientation:** VUVU **Meters:**
**Manual:** 9 **0.25% Pb:** Yes **Spare Parts Only:** No
**Approved:** 26-Nov-2013 **Renewed:** 26-Nov-2016 **Bypass:**
**Shutoffs:** (ll),mm,oo,pp,zzz,cccc,dddd,eeee,ffff,gggg,nnnnn

---

**Type:** RP **Manufacturer:** Febco **Model:** LF880V
**Size:** 10 **Orientation:** VUVD **Meters:**
**Manual:** 10 **0.25% Pb:** Yes **Spare Parts Only:** No
**Approved:** 29-May-2018 **Renewed:** **Bypass:**
**Shutoffs:** (ll),mm,oo,pp,zzz,cccc,dddd,eeee,ffff,gggg,nnnnn

---

**Type:** RP **Manufacturer:** Febco **Model:** LF880V
**Size:** 10 **Orientation:** VUVU **Meters:**
**Manual:** 10 **0.25% Pb:** Yes **Spare Parts Only:** No
**Approved:** 29-May-2018 **Renewed:** **Bypass:**
**Shutoffs:** (ll),mm,oo,pp,zzz,cccc,dddd,eeee,ffff,gggg,nnnnn

---

**Type:** RP **Manufacturer:** Neptune **Model:**
**Size:** **Orientation:** **Meters:**
**Manual:** **0.25% Pb:** No **Spare Parts Only:** No
**Approved:** **Renewed:** **Bypass:**
**Notes:** See Wilkins

---

**Type:** RP **Manufacturer:** Watts **Model:** 009
**Size:** 2 1/2 **Orientation:** H **Meters:**
**Manual:** 8 **0.25% Pb:** No **Spare Parts Only:** Yes
**Approved:** 31-Aug-1990 **Renewed:** 31-Aug-2017 **Bypass:**
**Shutoffs:** (oo),gg,hh,ll,mm,pp,tt,uu,yy,ffff,gggg


2018 © University of Southern California

**Type:** RP
**Manufacturer:** Watts
**Model:** 009
**Size:** 3
**Orientation:** H
**Meters:**
**Manual:** 8
**0.25% Pb:** No
**Spare Parts Only:** Yes
**Approved:** 31-Aug-1990
**Renewed:** 31-Aug-2017
**Bypass:**
**Shutoffs:** (oo),gg,hh,ll,mm,pp,tt,uu,yy,eee,ffff,gggg

---

**Type:** RP
**Manufacturer:** Watts
**Model:** 009M1PCQT
**Size:** 1 1/4
**Orientation:** H
**Meters:**
**Manual:** 8
**0.25% Pb:** No
**Spare Parts Only:** Yes
**Approved:** 27-Sep-1994
**Renewed:** 27-Sep-2018
**Bypass:**
**Shutoffs:** vv,xx,ooo,hhhh,pppp,rrrrr

---

**Type:** RP
**Manufacturer:** Watts
**Model:** 009M1PCQT
**Size:** 1 1/2
**Orientation:** H
**Meters:**
**Manual:** 8
**0.25% Pb:** No
**Spare Parts Only:** Yes
**Approved:** 27-Sep-1994
**Renewed:** 27-Sep-2018
**Bypass:**
**Shutoffs:** vv,xx,ooo,hhhh,pppp,rrrrr

---

**Type:** RP
**Manufacturer:** Watts
**Model:** 009M1PCQT
**Size:** 2
**Orientation:** H
**Meters:**
**Manual:** 8
**0.25% Pb:** No
**Spare Parts Only:** Yes
**Approved:** 27-Sep-1994
**Renewed:** 27-Sep-2018
**Bypass:**
**Shutoffs:** vv,xx,ooo,hhhh,pppp,rrrrr

---

**Type:** RP
**Manufacturer:** Watts
**Model:** 009M1QT
**Size:** 1 1/4
**Orientation:** H
**Meters:**
**Manual:** 8
**0.25% Pb:** No
**Spare Parts Only:** Yes
**Approved:** 30-Jun-1992
**Renewed:** 30-Jun-2016
**Bypass:**
**Shutoffs:** vv,xx,ooo,hhhh,pppp,rrrrr

---

**Type:** RP
**Manufacturer:** Watts
**Model:** 009M1QT
**Size:** 1 1/2
**Orientation:** H
**Meters:**
**Manual:** 8
**0.25% Pb:** No
**Spare Parts Only:** Yes
**Approved:** 30-Jun-1992
**Renewed:** 30-Jun-2016
**Bypass:**
**Shutoffs:** vv,xx,ooo,hhhh,pppp,rrrrr

---

**Type:** RP
**Manufacturer:** Watts
**Model:** 009M1QT
**Size:** 2
**Orientation:** H
**Meters:**
**Manual:** 8
**0.25% Pb:** No
**Spare Parts Only:** Yes
**Approved:** 19-Dec-1991
**Renewed:** 19-Dec-2015
**Bypass:**
**Shutoffs:** vv,xx,ooo,hhhh,pppp,rrrrr

**Type:** RP
**Size:** 1
**Manual:** 9
**Approved:** 01-Sep-2009
**Shutoffs:** (eeeee)
**Manufacturer:** Watts
**Orientation:** H
**0.25% Pb:** No
**Renewed:** 01-Sep-2018
**Model:** 009M2-FP
**Meters:**
**Spare Parts Only:** No
**Bypass:**

---

**Type:** RP
**Size:** 1 1/4
**Manual:** 9
**Approved:** 01-Sep-2009
**Shutoffs:** (eeeee)
**Manufacturer:** Watts
**Orientation:** H
**0.25% Pb:** No
**Renewed:** 01-Sep-2018
**Model:** 009M2-FP
**Meters:**
**Spare Parts Only:** No
**Bypass:**

---

**Type:** RP
**Size:** 1 1/2
**Manual:** 9
**Approved:** 01-Sep-2009
**Shutoffs:** (eeeee)
**Manufacturer:** Watts
**Orientation:** H
**0.25% Pb:** No
**Renewed:** 01-Sep-2018
**Model:** 009M2-FP
**Meters:**
**Spare Parts Only:** No
**Bypass:**

---

**Type:** RP
**Size:** 2
**Manual:** 9
**Approved:** 01-Sep-2009
**Shutoffs:** (eeeee)
**Manufacturer:** Watts
**Orientation:** H
**0.25% Pb:** No
**Renewed:** 01-Sep-2018
**Model:** 009M2-FP
**Meters:**
**Spare Parts Only:** No
**Bypass:**

---

**Type:** RP
**Size:** 3/4
**Manual:** 8
**Approved:** 07-Oct-2002
**Shutoffs:** (vv),xx,ooo,hhhh,pppp,rrrrr
**Manufacturer:** Watts
**Orientation:** H
**0.25% Pb:** No
**Renewed:** 07-Oct-2017
**Model:** 009M2PCQT
**Meters:**
**Spare Parts Only:** No
**Bypass:**

---

**Type:** RP
**Size:** 1
**Manual:** 9
**Approved:** 15-Jan-1999
**Shutoffs:** (vv),xx,ooo,hhhh,pppp,rrrrr
**Manufacturer:** Watts
**Orientation:** H
**0.25% Pb:** No
**Renewed:** 15-Jan-2017
**Model:** 009M2PCQT
**Meters:**
**Spare Parts Only:** No
**Bypass:**

---

**Type:** RP
**Size:** 1 1/4
**Manual:** 8
**Approved:** 12-Sep-1994
**Shutoffs:** (vv),xx,ooo,hhhh,pppp,rrrrr
**Manufacturer:** Watts
**Orientation:** H
**0.25% Pb:** No
**Renewed:** 12-Sep-2018
**Model:** 009M2PCQT
**Meters:**
**Spare Parts Only:** No
**Bypass:**


2018 © University of Southern California

**Type:** RP
**Size:** 1 1/2
**Manual:** 8
**Approved:** 12-Sep-1994
**Shutoffs:** (vv),xx,ooo,hhhh,pppp,rrrrr
**Manufacturer:** Watts
**Orientation:** H
**0.25% Pb:** No
**Renewed:** 12-Sep-2018
**Model:** 009M2PCQT
**Meters:**
**Spare Parts Only:** No
**Bypass:**

---

**Type:** RP
**Size:** 2
**Manual:** 9
**Approved:** 26-Aug-1997
**Shutoffs:** (vv),xx,ooo,hhhh,pppp,rrrrr
**Manufacturer:** Watts
**Orientation:** H
**0.25% Pb:** No
**Renewed:** 26-Aug-2018
**Model:** 009M2PCQT
**Meters:**
**Spare Parts Only:** No
**Bypass:**

---

**Type:** RP
**Size:** 3/4
**Manual:** 8
**Approved:** 31-Oct-1992
**Shutoffs:** (vv),xx,ooo,hhhh,pppp,rrrrr
**Manufacturer:** Watts
**Orientation:** H
**0.25% Pb:** No
**Renewed:** 31-Oct-2016
**Model:** 009M2QT
**Meters:**
**Spare Parts Only:** No
**Bypass:**

---

**Type:** RP
**Size:** 1
**Manual:** 9
**Approved:** 18-May-1998
**Shutoffs:** (vv),xx,ooo,hhhh,pppp,rrrrr
**Manufacturer:** Watts
**Orientation:** H
**0.25% Pb:** No
**Renewed:** 18-May-2016
**Model:** 009M2QT
**Meters:**
**Spare Parts Only:** No
**Bypass:**

---

**Type:** RP
**Size:** 1 1/4
**Manual:** 8
**Approved:** 24-Aug-1993
**Shutoffs:** (vv),xx,ooo,hhhh,pppp,rrrrr
**Manufacturer:** Watts
**Orientation:** H
**0.25% Pb:** No
**Renewed:** 24-Aug-2017
**Model:** 009M2QT
**Meters:**
**Spare Parts Only:** No
**Bypass:**

---

**Type:** RP
**Size:** 1 1/2
**Manual:** 8
**Approved:** 24-Aug-1993
**Shutoffs:** (vv),xx,ooo,hhhh,pppp,rrrrr
**Manufacturer:** Watts
**Orientation:** H
**0.25% Pb:** No
**Renewed:** 24-Aug-2017
**Model:** 009M2QT
**Meters:**
**Spare Parts Only:** No
**Bypass:**

---

**Type:** RP
**Size:** 2
**Manual:** 9
**Approved:** 10-Sep-1996
**Shutoffs:** (vv),xx,ooo,hhhh,pppp,rrrrr
**Manufacturer:** Watts
**Orientation:** H
**0.25% Pb:** No
**Renewed:** 10-Sep-2017
**Model:** 009M2QT
**Meters:**
**Spare Parts Only:** No
**Bypass:**

**Type:** RP
**Size:** 3/4
**Manual:** 9
**Approved:** 01-Sep-2009
**Shutoffs:** (eeeee)
**Manufacturer:** Watts
**Orientation:** H
**0.25% Pb:** No
**Renewed:** 01-Sep-2018
**Model:** 009M3-FP
**Meters:**
**Spare Parts Only:** No
**Bypass:**

---

**Type:** RP
**Size:** 3/4
**Manual:** 9
**Approved:** 18-Oct-1999
**Shutoffs:** (vv),xx,ooo,hhhh,pppp,rrrrr
**Manufacturer:** Watts
**Orientation:** H
**0.25% Pb:** No
**Renewed:** 18-Oct-2017
**Model:** 009M3QT
**Meters:**
**Spare Parts Only:** No
**Bypass:**

---

**Type:** RP
**Size:** 1/2
**Manual:** 8
**Approved:** 17-Feb-1995
**Shutoffs:** (vv),xx,ooo,hhhh,pppp,rrrrr
**Manufacturer:** Watts
**Orientation:** H
**0.25% Pb:** No
**Renewed:** 17-Feb-2016
**Model:** 009PCQT
**Meters:**
**Spare Parts Only:** Yes
**Bypass:**

---

**Type:** RP
**Size:** 3/4
**Manual:** 8
**Approved:** 10-Dec-1993
**Shutoffs:** (vv),xx,ooo,hhhh,pppp,rrrrr
**Manufacturer:** Watts
**Orientation:** H
**0.25% Pb:** No
**Renewed:** 10-Dec-2017
**Model:** 009PCQT
**Meters:**
**Spare Parts Only:** Yes
**Bypass:**

---

**Type:** RP
**Size:** 1
**Manual:** 8
**Approved:** 10-Dec-1993
**Shutoffs:** vv,xx,ooo,hhhh,pppp,rrrrr
**Manufacturer:** Watts
**Orientation:** H
**0.25% Pb:** No
**Renewed:** 10-Dec-2017
**Model:** 009PCQT
**Meters:**
**Spare Parts Only:** Yes
**Bypass:**

---

**Type:** RP
**Size:** 1 1/4
**Manual:** 8
**Approved:** 27-Sep-1994
**Shutoffs:** vv,xx,ooo,hhhh,pppp,rrrrr
**Manufacturer:** Watts
**Orientation:** H
**0.25% Pb:** No
**Renewed:** 27-Sep-2018
**Model:** 009PCQT
**Meters:**
**Spare Parts Only:** Yes
**Bypass:**

---

**Type:** RP
**Size:** 1 1/2
**Manual:** 8
**Approved:** 27-Sep-1994
**Shutoffs:** vv,xx,ooo,hhhh,pppp,rrrrr
**Manufacturer:** Watts
**Orientation:** H
**0.25% Pb:** No
**Renewed:** 27-Sep-2018
**Model:** 009PCQT
**Meters:**
**Spare Parts Only:** Yes
**Bypass:**


2018 © University of Southern California

**Type:** RP
**Manufacturer:** Watts
**Model:** 009PCQT
**Size:** 2
**Orientation:** H
**Meters:**
**Manual:** 8
**0.25% Pb:** No
**Spare Parts Only:** Yes
**Approved:** 27-Sep-1994
**Renewed:** 27-Sep-2018
**Bypass:**
**Shutoffs:** vv,xx,ooo,hhhh,pppp,rrrrr

---

**Type:** RP
**Manufacturer:** Watts
**Model:** 009QT
**Size:** 1/4
**Orientation:** H
**Meters:**
**Manual:** 8
**0.25% Pb:** No
**Spare Parts Only:** No
**Approved:** 07-Aug-1995
**Renewed:** 07-Aug-2016
**Bypass:**
**Shutoffs:** (vv),xx,ooo,hhhh,pppp

---

**Type:** RP
**Manufacturer:** Watts
**Model:** 009QT
**Size:** 3/8
**Orientation:** H
**Meters:**
**Manual:** 8
**0.25% Pb:** No
**Spare Parts Only:** No
**Approved:** 07-Aug-1995
**Renewed:** 07-Aug-2016
**Bypass:**
**Shutoffs:** (vv),xx,ooo,hhhh,pppp

---

**Type:** RP
**Manufacturer:** Watts
**Model:** 009QT
**Size:** 1/2
**Orientation:** H
**Meters:**
**Manual:** 9
**0.25% Pb:** No
**Spare Parts Only:** No
**Approved:** 10-Sep-1996
**Renewed:** 10-Sep-2017
**Bypass:**
**Shutoffs:** (vv),xx,ooo,hhhh,pppp,rrrrr
**Notes:** Previously approved 8th Ed. 26 May 1993

---

**Type:** RP
**Manufacturer:** Watts
**Model:** 009QT
**Size:** 3/4
**Orientation:** H
**Meters:**
**Manual:** 7
**0.25% Pb:** No
**Spare Parts Only:** Yes
**Approved:** 11-Jan-1988
**Renewed:** 11-Jan-2018
**Bypass:**
**Shutoffs:** (vv),xx,ooo,hhhh,pppp,rrrrr

---

**Type:** RP
**Manufacturer:** Watts
**Model:** 009QT
**Size:** 1
**Orientation:** H
**Meters:**
**Manual:** 7
**0.25% Pb:** No
**Spare Parts Only:** Yes
**Approved:** 11-Jan-1988
**Renewed:** 11-Jan-2018
**Bypass:**
**Shutoffs:** vv,xx,ooo,hhhh,pppp,rrrrr

**Type:** RP
**Size:** 1 1/4
**Manual:** 7
**Approved:** 09-Aug-1988
**Shutoffs:** vv,xx,ooo,hhhh,pppp,rrrrr
**Manufacturer:** Watts
**Orientation:** H
**0.25% Pb:** No
**Renewed:** 09-Aug-2018
**Model:** 009QT
**Meters:**
**Spare Parts Only:** Yes
**Bypass:**

---

**Type:** RP
**Size:** 1 1/2
**Manual:** 7
**Approved:** 09-Aug-1988
**Shutoffs:** vv,xx,ooo,hhhh,pppp,rrrrr
**Manufacturer:** Watts
**Orientation:** H
**0.25% Pb:** No
**Renewed:** 09-Aug-2018
**Model:** 009QT
**Meters:**
**Spare Parts Only:** Yes
**Bypass:**

---

**Type:** RP
**Size:** 2
**Manual:** 7
**Approved:** 09-Aug-1988
**Shutoffs:** vv,xx,ooo,hhhh,pppp,rrrrr
**Manufacturer:** Watts
**Orientation:** H
**0.25% Pb:** No
**Renewed:** 09-Aug-2018
**Model:** 009QT
**Meters:**
**Spare Parts Only:** Yes
**Bypass:**

---

**Type:** RP
**Size:** 2
**Manual:** 8
**Approved:** 27-Sep-1994
**Shutoffs:** vv,xx,pppp
**Manufacturer:** Watts
**Orientation:** H
**0.25% Pb:** No
**Renewed:** 27-Sep-2018
**Model:** 009SSM1PCQT
**Meters:**
**Spare Parts Only:** Yes
**Bypass:**

---

**Type:** RP
**Size:** 2
**Manual:** 8
**Approved:** 19-Dec-1991
**Shutoffs:** vv,xx,pppp
**Manufacturer:** Watts
**Orientation:** H
**0.25% Pb:** No
**Renewed:** 19-Dec-2015
**Model:** 009SSM1QT
**Meters:**
**Spare Parts Only:** Yes
**Bypass:**

---

**Type:** RP
**Size:** 3/4
**Manual:** 8
**Approved:** 10-Dec-1993
**Shutoffs:** vv,xx,pppp
**Manufacturer:** Watts
**Orientation:** H
**0.25% Pb:** No
**Renewed:** 10-Dec-2017
**Model:** 009SSPCQT
**Meters:**
**Spare Parts Only:** Yes
**Bypass:**

---

**Type:** RP
**Size:** 1
**Manual:** 8
**Approved:** 10-Dec-1993
**Shutoffs:** vv,xx,pppp
**Manufacturer:** Watts
**Orientation:** H
**0.25% Pb:** No
**Renewed:** 10-Dec-2017
**Model:** 009SSPCQT
**Meters:**
**Spare Parts Only:** Yes
**Bypass:**


2018 © University of Southern California

**Type:** RP
**Size:** 1 1/4
**Manual:** 8
**Approved:** 27-Sep-1994
**Shutoffs:** vv,xx,pppp
**Manufacturer:** Watts
**Orientation:** H
**0.25% Pb:** No
**Renewed:** 27-Sep-2018
**Model:** 009SSPCQT
**Meters:**
**Spare Parts Only:** Yes
**Bypass:**

---

**Type:** RP
**Size:** 1 1/2
**Manual:** 8
**Approved:** 27-Sep-1994
**Shutoffs:** vv,xx,pppp
**Manufacturer:** Watts
**Orientation:** H
**0.25% Pb:** No
**Renewed:** 27-Sep-2018
**Model:** 009SSPCQT
**Meters:**
**Spare Parts Only:** Yes
**Bypass:**

---

**Type:** RP
**Size:** 2
**Manual:** 8
**Approved:** 27-Sep-1994
**Shutoffs:** vv,xx,pppp
**Manufacturer:** Watts
**Orientation:** H
**0.25% Pb:** No
**Renewed:** 27-Sep-2018
**Model:** 009SSPCQT
**Meters:**
**Spare Parts Only:** Yes
**Bypass:**

---

**Type:** RP
**Size:** 3/4
**Manual:** 7
**Approved:** 11-Jan-1988
**Shutoffs:** vv,xx,pppp
**Manufacturer:** Watts
**Orientation:** H
**0.25% Pb:** No
**Renewed:** 11-Jan-2018
**Model:** 009SSQT
**Meters:**
**Spare Parts Only:** Yes
**Bypass:**

---

**Type:** RP
**Size:** 1
**Manual:** 7
**Approved:** 11-Jan-1988
**Shutoffs:** vv,xx,pppp
**Manufacturer:** Watts
**Orientation:** H
**0.25% Pb:** No
**Renewed:** 11-Jan-2018
**Model:** 009SSQT
**Meters:**
**Spare Parts Only:** Yes
**Bypass:**

---

**Type:** RP
**Size:** 1 1/4
**Manual:** 7
**Approved:** 09-Aug-1988
**Shutoffs:** vv,xx,pppp
**Manufacturer:** Watts
**Orientation:** H
**0.25% Pb:** No
**Renewed:** 09-Aug-2018
**Model:** 009SSQT
**Meters:**
**Spare Parts Only:** Yes
**Bypass:**

---

**Type:** RP
**Size:** 1 1/2
**Manual:** 7
**Approved:** 09-Aug-1988
**Shutoffs:** vv,xx,pppp
**Manufacturer:** Watts
**Orientation:** H
**0.25% Pb:** No
**Renewed:** 09-Aug-2018
**Model:** 009SSQT
**Meters:**
**Spare Parts Only:** Yes
**Bypass:**

**Type:** RP
**Manufacturer:** Watts
**Model:** 009SSQT
**Size:** 2
**Orientation:** H
**Meters:**
**Manual:** 7
**0.25% Pb:** No
**Spare Parts Only:** Yes
**Approved:** 09-Aug-1988
**Renewed:** 09-Aug-2018
**Bypass:**
**Shutoffs:** vv,xx,pppp

---

**Type:** RP
**Manufacturer:** Watts
**Model:** 909
**Size:** 2 1/2
**Orientation:** H
**Meters:**
**Manual:** 7
**0.25% Pb:** No
**Spare Parts Only:** Yes
**Approved:** 12-Jun-1986
**Renewed:** 12-Jun-2016
**Bypass:**
**Shutoffs:** (oo),gg,hh,ll,mm,pp,tt,uu,ww,yy,ffff,gggg

---

**Type:** RP
**Manufacturer:** Watts
**Model:** 909
**Size:** 3
**Orientation:** H
**Meters:**
**Manual:** 7
**0.25% Pb:** No
**Spare Parts Only:** Yes
**Approved:** 12-Jun-1986
**Renewed:** 12-Jun-2016
**Bypass:**
**Shutoffs:** (oo),gg,hh,ll,mm,pp,tt,uu,ww,yy,eee,ffff,gggg
**Notes:** formerly 909NRS/909OSY/909NRSRW/909OSYRW/909RW

---

**Type:** RP
**Manufacturer:** Watts
**Model:** 909
**Size:** 4
**Orientation:** H
**Meters:**
**Manual:** 6
**0.25% Pb:** No
**Spare Parts Only:** Yes
**Approved:** 15-Jan-1982
**Renewed:** 15-Jan-2018
**Bypass:**
**Shutoffs:** (oo),gg,hh,ll,mm,pp,tt,uu,ww,yy,eee,ffff,gggg
**Notes:** formerly 909NRS/909OSY/909NRSRW/909OSYRW/909RW

---

**Type:** RP
**Manufacturer:** Watts
**Model:** 909
**Size:** 6
**Orientation:** H
**Meters:**
**Manual:** 6
**0.25% Pb:** No
**Spare Parts Only:** Yes
**Approved:** 06-Jul-1981
**Renewed:** 06-Jul-2017
**Bypass:**
**Shutoffs:** (oo),gg,hh,ll,mm,pp,tt,uu,ww,yy,eee,ffff,gggg
**Notes:** formerly 909NRS/909OSY/909NRSRW/909OSYRW/909RW

---

**Type:** RP
**Manufacturer:** Watts
**Model:** 909
**Size:** 8
**Orientation:** H
**Meters:**
**Manual:** 6
**0.25% Pb:** No
**Spare Parts Only:** Yes
**Approved:** 06-Jul-1981
**Renewed:** 06-Jul-2017
**Bypass:**
**Notes:** formerly 909NRS/909OSY/909NRSRW/909OSYRW/909RW


2018 © University of Southern California

**Type:** RP
**Manufacturer:** Watts
**Model:** 909
**Size:** 10
**Orientation:** H
**Meters:**
**Manual:** 6
**0.25% Pb:** No
**Spare Parts Only:** Yes
**Approved:** 06-Jul-1981
**Renewed:** 06-Jul-2017
**Bypass:**
**Notes:** formerly 909NRS/909OSY/909NRSRW/909OSYRW/909RW

---

**Type:** RP
**Manufacturer:** Watts
**Model:** 909BB
**Size:** 2 1/2
**Orientation:** H
**Meters:**
**Manual:** 6
**0.25% Pb:** No
**Spare Parts Only:** Yes
**Approved:** 04-Feb-1983
**Renewed:** 04-Feb-2016
**Bypass:**
**Shutoffs:** (oo),gg,hh,ll,mm,pp,tt,uu,yy,ffff,gggg

---

**Type:** RP
**Manufacturer:** Watts
**Model:** 909BB
**Size:** 3
**Orientation:** H
**Meters:**
**Manual:** 6
**0.25% Pb:** No
**Spare Parts Only:** Yes
**Approved:** 04-Feb-1983
**Renewed:** 04-Feb-2016
**Bypass:**
**Shutoffs:** (oo),gg,hh,ll,mm,pp,tt,uu,yy,ffff,gggg

---

**Type:** RP
**Manufacturer:** Watts
**Model:** 909HWQT
**Size:** 3/4
**Orientation:** H
**Meters:**
**Manual:** 5
**0.25% Pb:** No
**Spare Parts Only:** Yes
**Approved:** 29-Sep-1979
**Renewed:** 29-Sep-2018
**Bypass:**
**Shutoffs:** (vv),xx,ooo,hhhh,pppp,rrrrr

---

**Type:** RP
**Manufacturer:** Watts
**Model:** 909HWQT
**Size:** 1
**Orientation:** H
**Meters:**
**Manual:** 5
**0.25% Pb:** No
**Spare Parts Only:** Yes
**Approved:** 29-Sep-1979
**Renewed:** 29-Sep-2018
**Bypass:**
**Shutoffs:** (vv),xx,ooo,hhhh,pppp,rrrrr

---

**Type:** RP
**Manufacturer:** Watts
**Model:** 909HWQT
**Size:** 1 1/4
**Orientation:**
**Meters:**
**Manual:**
**0.25% Pb:** No
**Spare Parts Only:** No
**Approved:**
**Renewed:**
**Bypass:**
**Notes:** model designation changed to 909M1HWQT

---

**Type:** RP
**Manufacturer:** Watts
**Model:** 909HWQT
**Size:** 1 1/2
**Orientation:**
**Meters:**
**Manual:**
**0.25% Pb:** No
**Spare Parts Only:** No
**Approved:**
**Renewed:**
**Bypass:**
**Notes:** model designation changed to 909M1HWQT

**Type:** RP
**Manufacturer:** Watts
**Model:** 909HWQT
**Size:** 2
**Orientation:**
**Meters:**
**Manual:**
**0.25% Pb:** No
**Spare Parts Only:** No
**Approved:**
**Renewed:**
**Bypass:**
**Notes:** model designation changed to 909M1HWQT

---

**Type:** RP
**Manufacturer:** Watts
**Model:** 909M1
**Size:** 8
**Orientation:** H
**Meters:**
**Manual:** 8
**0.25% Pb:** No
**Spare Parts Only:** Yes
**Approved:** 01-May-1989
**Renewed:** 01-May-2016
**Bypass:**
**Shutoffs:** (oo),gg,hh,ll,mm,pp,tt,uu,yy,ww,ffff,gggg

---

**Type:** RP
**Manufacturer:** Watts
**Model:** 909M1
**Size:** 10
**Orientation:** H
**Meters:**
**Manual:** 8
**0.25% Pb:** No
**Spare Parts Only:** Yes
**Approved:** 01-May-1989
**Renewed:** 01-May-2016
**Bypass:**
**Shutoffs:** (oo),gg,hh,ll,mm,pp,tt,uu,ww,yy,ffff,gggg

---

**Type:** RP
**Manufacturer:** Watts
**Model:** 909M1HWQT
**Size:** 1 1/4
**Orientation:** H
**Meters:**
**Manual:** 5
**0.25% Pb:** No
**Spare Parts Only:** Yes
**Approved:** 07-Feb-1980
**Renewed:** 07-Feb-2016
**Bypass:**
**Shutoffs:** (vv),xx,ooo,hhhh,rrrrr
**Notes:** formerly 909HWQT

---

**Type:** RP
**Manufacturer:** Watts
**Model:** 909M1HWQT
**Size:** 1 1/2
**Orientation:** H
**Meters:**
**Manual:** 5
**0.25% Pb:** No
**Spare Parts Only:** Yes
**Approved:** 07-Feb-1980
**Renewed:** 07-Feb-2016
**Bypass:**
**Shutoffs:** (vv),xx,ooo,hhhh,rrrrr
**Notes:** formerly 909HWQT

---

**Type:** RP
**Manufacturer:** Watts
**Model:** 909M1HWQT
**Size:** 2
**Orientation:** H
**Meters:**
**Manual:** 5
**0.25% Pb:** No
**Spare Parts Only:** Yes
**Approved:** 07-Feb-1980
**Renewed:** 07-Feb-2016
**Bypass:**
**Shutoffs:** (vv),xx,ooo,hhhh,rrrrr
**Notes:** formerly 909HWQT


2018 © University of Southern California

**Type:** RP
**Size:** 1 1/4
**Manual:** 8
**Approved:** 02-Feb-1995
**Shutoffs:** (vv),xx,ooo,hhhh,rrrrr
**Manufacturer:** Watts
**Orientation:** H
**0.25% Pb:** No
**Renewed:** 02-Feb-2016
**Model:** 909M1PCHWQT
**Meters:**
**Spare Parts Only:** Yes
**Bypass:**

---

**Type:** RP
**Size:** 1 1/2
**Manual:** 8
**Approved:** 02-Feb-1995
**Shutoffs:** (vv),xx,ooo,hhhh,rrrrr
**Manufacturer:** Watts
**Orientation:** H
**0.25% Pb:** No
**Renewed:** 02-Feb-2016
**Model:** 909M1PCHWQT
**Meters:**
**Spare Parts Only:** Yes
**Bypass:**

---

**Type:** RP
**Size:** 2
**Manual:** 8
**Approved:** 02-Feb-1995
**Shutoffs:** (vv),xx,ooo,hhhh,rrrrr
**Manufacturer:** Watts
**Orientation:** H
**0.25% Pb:** No
**Renewed:** 02-Feb-2016
**Model:** 909M1PCHWQT
**Meters:**
**Spare Parts Only:** Yes
**Bypass:**

---

**Type:** RP
**Size:** 1 1/4
**Manual:** 6
**Approved:** 15-Jan-1982
**Shutoffs:** (vv),xx,ooo,hhhh,pppp,rrrrr
**Notes:** formerly 909QT
**Manufacturer:** Watts
**Orientation:** H
**0.25% Pb:** No
**Renewed:** 15-Jan-2018
**Model:** 909M1QT
**Meters:**
**Spare Parts Only:** Yes
**Bypass:**

---

**Type:** RP
**Size:** 1 1/2
**Manual:** 6
**Approved:** 15-Jan-1982
**Shutoffs:** (vv),xx,ooo,hhhh,pppp,rrrrr
**Notes:** formerly 909QT
**Manufacturer:** Watts
**Orientation:** H
**0.25% Pb:** No
**Renewed:** 15-Jan-2018
**Model:** 909M1QT
**Meters:**
**Spare Parts Only:** Yes
**Bypass:**

---

**Type:** RP
**Size:** 2
**Manual:** 6
**Approved:** 15-Jan-1982
**Shutoffs:** (vv),xx,ooo,hhhh,pppp,rrrrr
**Notes:** formerly 909QT
**Manufacturer:** Watts
**Orientation:** H
**0.25% Pb:** No
**Renewed:** 15-Jan-2018
**Model:** 909M1QT
**Meters:**
**Spare Parts Only:** Yes
**Bypass:**

**Type:** RP
**Manufacturer:** Watts
**Model:** 909NRS
**Size:** 3
**Orientation:**
**Meters:**
**Manual:**
**0.25% Pb:** No
**Spare Parts Only:** No
**Approved:**
**Renewed:**
**Bypass:**
**Notes:** model designation changed to 909

---

**Type:** RP
**Manufacturer:** Watts
**Model:** 909NRS
**Size:** 4
**Orientation:**
**Meters:**
**Manual:**
**0.25% Pb:** No
**Spare Parts Only:** No
**Approved:**
**Renewed:**
**Bypass:**
**Notes:** model designation changed to 909

---

**Type:** RP
**Manufacturer:** Watts
**Model:** 909NRS
**Size:** 6
**Orientation:**
**Meters:**
**Manual:**
**0.25% Pb:** No
**Spare Parts Only:** No
**Approved:**
**Renewed:**
**Bypass:**
**Notes:** model designation changed to 909

---

**Type:** RP
**Manufacturer:** Watts
**Model:** 909NRS
**Size:** 8
**Orientation:**
**Meters:**
**Manual:**
**0.25% Pb:** No
**Spare Parts Only:** No
**Approved:**
**Renewed:**
**Bypass:**
**Notes:** model designation changed to 909

---

**Type:** RP
**Manufacturer:** Watts
**Model:** 909NRS
**Size:** 10
**Orientation:**
**Meters:**
**Manual:**
**0.25% Pb:** No
**Spare Parts Only:** No
**Approved:**
**Renewed:**
**Bypass:**
**Notes:** model designation changed to 909

---

**Type:** RP
**Manufacturer:** Watts
**Model:** 909NRSRW
**Size:** 3
**Orientation:**
**Meters:**
**Manual:**
**0.25% Pb:** No
**Spare Parts Only:** No
**Approved:**
**Renewed:**
**Bypass:**
**Notes:** model designation changed to 909

---

**Type:** RP
**Manufacturer:** Watts
**Model:** 909NRSRW
**Size:** 4
**Orientation:**
**Meters:**
**Manual:**
**0.25% Pb:** No
**Spare Parts Only:** No
**Approved:**
**Renewed:**
**Bypass:**
**Notes:** model designation changed to 909


2018 © University of Southern California

**Type:** RP
**Manufacturer:** Watts
**Model:** 909NRSRW
**Size:** 6
**Orientation:**
**Meters:**
**Manual:**
**0.25% Pb:** No
**Spare Parts Only:** No
**Approved:**
**Renewed:**
**Bypass:**
**Notes:** model designation changed to 909

---

**Type:** RP
**Manufacturer:** Watts
**Model:** 909NRSRW
**Size:** 8
**Orientation:**
**Meters:**
**Manual:**
**0.25% Pb:** No
**Spare Parts Only:** No
**Approved:**
**Renewed:**
**Bypass:**
**Notes:** model designation changed to 909

---

**Type:** RP
**Manufacturer:** Watts
**Model:** 909NRSRW
**Size:** 10
**Orientation:**
**Meters:**
**Manual:**
**0.25% Pb:** No
**Spare Parts Only:** No
**Approved:**
**Renewed:**
**Bypass:**
**Notes:** model designation changed to 909

---

**Type:** RP
**Manufacturer:** Watts
**Model:** 909OSY
**Size:** 3
**Orientation:**
**Meters:**
**Manual:**
**0.25% Pb:** No
**Spare Parts Only:** No
**Approved:**
**Renewed:**
**Bypass:**
**Notes:** model designation changed to 909

---

**Type:** RP
**Manufacturer:** Watts
**Model:** 909OSY
**Size:** 4
**Orientation:**
**Meters:**
**Manual:**
**0.25% Pb:** No
**Spare Parts Only:** No
**Approved:**
**Renewed:**
**Bypass:**
**Notes:** model designation changed to 909

---

**Type:** RP
**Manufacturer:** Watts
**Model:** 909OSY
**Size:** 6
**Orientation:**
**Meters:**
**Manual:**
**0.25% Pb:** No
**Spare Parts Only:** No
**Approved:**
**Renewed:**
**Bypass:**
**Notes:** model designation changed to 909

---

**Type:** RP
**Manufacturer:** Watts
**Model:** 909OSY
**Size:** 8
**Orientation:**
**Meters:**
**Manual:**
**0.25% Pb:** No
**Spare Parts Only:** No
**Approved:**
**Renewed:**
**Bypass:**
**Notes:** model designation changed to 909

**Type:** RP
**Manufacturer:** Watts
**Model:** 909OSY
**Size:** 10
**Orientation:**
**Meters:**
**Manual:**
**0.25% Pb:** No
**Spare Parts Only:** No
**Approved:**
**Renewed:**
**Bypass:**
**Notes:** model designation changed to 909

---

**Type:** RP
**Manufacturer:** Watts
**Model:** 909OSYRW
**Size:** 3
**Orientation:**
**Meters:**
**Manual:**
**0.25% Pb:** No
**Spare Parts Only:** No
**Approved:**
**Renewed:**
**Bypass:**
**Notes:** model designation changed to 909

---

**Type:** RP
**Manufacturer:** Watts
**Model:** 909OSYRW
**Size:** 4
**Orientation:**
**Meters:**
**Manual:**
**0.25% Pb:** No
**Spare Parts Only:** No
**Approved:**
**Renewed:**
**Bypass:**
**Notes:** model designation changed to 909

---

**Type:** RP
**Manufacturer:** Watts
**Model:** 909OSYRW
**Size:** 6
**Orientation:**
**Meters:**
**Manual:**
**0.25% Pb:** No
**Spare Parts Only:** No
**Approved:**
**Renewed:**
**Bypass:**
**Notes:** model designation changed to 909

---

**Type:** RP
**Manufacturer:** Watts
**Model:** 909OSYRW
**Size:** 8
**Orientation:**
**Meters:**
**Manual:**
**0.25% Pb:** No
**Spare Parts Only:** No
**Approved:**
**Renewed:**
**Bypass:**
**Notes:** model designation changed to 909

---

**Type:** RP
**Manufacturer:** Watts
**Model:** 909OSYRW
**Size:** 10
**Orientation:**
**Meters:**
**Manual:**
**0.25% Pb:** No
**Spare Parts Only:** No
**Approved:**
**Renewed:**
**Bypass:**
**Notes:** model designation changed to 909

---

**Type:** RP
**Manufacturer:** Watts
**Model:** 909PCHWQT
**Size:** 3/4
**Orientation:** H
**Meters:**
**Manual:** 8
**0.25% Pb:** No
**Spare Parts Only:** Yes
**Approved:** 02-Feb-1995
**Renewed:** 02-Feb-2016
**Bypass:**
**Shutoffs:** (vv),xx,ooo,hhhh,pppp,rrrrr


2018 © University of Southern California

**Type:** RP
**Manufacturer:** Watts
**Model:** 909PCHWQT
**Size:** 1
**Orientation:** H
**Meters:**
**Manual:** 8
**0.25% Pb:** No
**Spare Parts Only:** Yes
**Approved:** 02-Feb-1995
**Renewed:** 02-Feb-2016
**Bypass:**
**Shutoffs:** (vv),xx,ooo,hhhh,pppp,rrrrr

---

**Type:** RP
**Manufacturer:** Watts
**Model:** 909PCM1QT
**Size:** 1 1/4
**Orientation:** H
**Meters:**
**Manual:** 8
**0.25% Pb:** No
**Spare Parts Only:** Yes
**Approved:** 02-Feb-1995
**Renewed:** 02-Feb-2016
**Bypass:**
**Shutoffs:** (vv),xx,ooo,hhhh,pppp,rrrrr

---

**Type:** RP
**Manufacturer:** Watts
**Model:** 909PCM1QT
**Size:** 1 1/2
**Orientation:** H
**Meters:**
**Manual:** 8
**0.25% Pb:** No
**Spare Parts Only:** Yes
**Approved:** 02-Feb-1995
**Renewed:** 02-Feb-2016
**Bypass:**
**Shutoffs:** (vv),xx,ooo,hhhh,pppp,rrrrr

---

**Type:** RP
**Manufacturer:** Watts
**Model:** 909PCM1QT
**Size:** 2
**Orientation:** H
**Meters:**
**Manual:** 8
**0.25% Pb:** No
**Spare Parts Only:** Yes
**Approved:** 02-Feb-1995
**Renewed:** 02-Feb-2016
**Bypass:**
**Shutoffs:** (vv),xx,ooo,hhhh,pppp,rrrrr

---

**Type:** RP
**Manufacturer:** Watts
**Model:** 909PCQT
**Size:** 3/4
**Orientation:** H
**Meters:**
**Manual:** 9
**0.25% Pb:** No
**Spare Parts Only:** Yes
**Approved:** 09-Oct-1998
**Renewed:** 04-Oct-2016
**Bypass:**
**Shutoffs:** (vv),xx,ooo,hhhh,pppp,rrrrr
**Notes:** Previously Approved 8th Ed (2 February 1995) 9th Ed. for Ser. Nos. 464100 and higher

---

**Type:** RP
**Manufacturer:** Watts
**Model:** 909PCQT
**Size:** 3/4
**Orientation:** VU
**Meters:**
**Manual:** 9
**0.25% Pb:** No
**Spare Parts Only:** Yes
**Approved:** 09-Oct-1998
**Renewed:** 04-Oct-2016
**Bypass:**
**Shutoffs:** (vv),xx,ooo,hhhh,pppp,rrrrr
**Notes:** Serial number 464100 and higher

**Type:** RP **Manufacturer:** Watts **Model:** 909PCQT
**Size:** 1 **Orientation:** H **Meters:**
**Manual:** 9 **0.25% Pb:** No **Spare Parts Only:** Yes
**Approved:** 09-Oct-1998 **Renewed:** 09-Oct-2016 **Bypass:**
**Shutoffs:** (vv),xx,ooo,hhhh,pppp,rrrrr
**Notes:** Previously Approved 8th Ed (2 February 1995) 9th Ed. for Ser. Nos. 464100 and higher

---

**Type:** RP **Manufacturer:** Watts **Model:** 909PCQT
**Size:** 1 **Orientation:** VU **Meters:**
**Manual:** 9 **0.25% Pb:** No **Spare Parts Only:** Yes
**Approved:** 09-Oct-1998 **Renewed:** 09-Oct-2016 **Bypass:**
**Shutoffs:** (vv),xx,ooo,hhhh,pppp,rrrrr
**Notes:** Previously Approved 8th Ed (2 February 1995) 9th Ed. for Ser. Nos. 464100 and higher

---

**Type:** RP **Manufacturer:** Watts **Model:** 909QT
**Size:** 3/4 **Orientation:** H **Meters:**
**Manual:** 9 **0.25% Pb:** No **Spare Parts Only:** Yes
**Approved:** 18-Jun-1998 **Renewed:** 18-Jun-2016 **Bypass:**
**Shutoffs:** (vv),xx,ooo,hhhh,pppp,rrrrr
**Notes:** Previously Approved 6th Ed. (15 Jan 1982) 9th Ed. For Ser. Nos. 461650 and higher

---

**Type:** RP **Manufacturer:** Watts **Model:** 909QT
**Size:** 3/4 **Orientation:** VU **Meters:**
**Manual:** 9 **0.25% Pb:** No **Spare Parts Only:** Yes
**Approved:** 18-Jun-1998 **Renewed:** 18-Jun-2016 **Bypass:**
**Shutoffs:** (vv),xx,ooo,hhhh,pppp,rrrrr
**Notes:** Serial number 461650 and higher

---

**Type:** RP **Manufacturer:** Watts **Model:** 909QT
**Size:** 1 **Orientation:** H **Meters:**
**Manual:** 9 **0.25% Pb:** No **Spare Parts Only:** Yes
**Approved:** 18-Jun-1998 **Renewed:** 18-Jun-2016 **Bypass:**
**Shutoffs:** (vv),xx,ooo,hhhh,pppp,rrrrr
**Notes:** Previously Approved 6th Ed. (15 Jan 1982) 9th Ed. For Ser. Nos. 461650 and higher

---

**Type:** RP **Manufacturer:** Watts **Model:** 909QT
**Size:** 1 **Orientation:** VU **Meters:**
**Manual:** 9 **0.25% Pb:** No **Spare Parts Only:** Yes
**Approved:** 18-Jun-1998 **Renewed:** 18-Jun-2016 **Bypass:**
**Shutoffs:** (vv),xx,ooo,hhhh,pppp,rrrrr
**Notes:** Serial number 461650 and higher


2018 © University of Southern California

**Type:** RP
**Manufacturer:** Watts
**Model:** 909QT
**Size:** 1 1/4
**Orientation:**
**Meters:**
**Manual:**
**0.25% Pb:** No
**Spare Parts Only:** No
**Approved:**
**Renewed:**
**Bypass:**
**Notes:** model designation changed to 909M1QT

---

**Type:** RP
**Manufacturer:** Watts
**Model:** 909QT
**Size:** 1 1/2
**Orientation:**
**Meters:**
**Manual:**
**0.25% Pb:** No
**Spare Parts Only:** No
**Approved:**
**Renewed:**
**Bypass:**
**Notes:** model designation changed to 909M1QT

---

**Type:** RP
**Manufacturer:** Watts
**Model:** 909QT
**Size:** 2
**Orientation:**
**Meters:**
**Manual:**
**0.25% Pb:** No
**Spare Parts Only:** No
**Approved:**
**Renewed:**
**Bypass:**
**Notes:** model designation changed to 909M1QT

---

**Type:** RP
**Manufacturer:** Watts
**Model:** 909RW
**Size:** 3
**Orientation:**
**Meters:**
**Manual:**
**0.25% Pb:** No
**Spare Parts Only:** No
**Approved:**
**Renewed:**
**Bypass:**
**Notes:** model designation changed to 909

---

**Type:** RP
**Manufacturer:** Watts
**Model:** 909RW
**Size:** 4
**Orientation:**
**Meters:**
**Manual:**
**0.25% Pb:** No
**Spare Parts Only:** No
**Approved:**
**Renewed:**
**Bypass:**
**Notes:** model designation changed to 909

---

**Type:** RP
**Manufacturer:** Watts
**Model:** 909RW
**Size:** 6
**Orientation:**
**Meters:**
**Manual:**
**0.25% Pb:** No
**Spare Parts Only:** No
**Approved:**
**Renewed:**
**Bypass:**
**Notes:** model designation changed to 909

---

**Type:** RP
**Manufacturer:** Watts
**Model:** 909RW
**Size:** 8
**Orientation:**
**Meters:**
**Manual:**
**0.25% Pb:** No
**Spare Parts Only:** No
**Approved:**
**Renewed:**
**Bypass:**
**Notes:** model designation changed to 909

**Type:** RP
**Manufacturer:** Watts
**Model:** 909RW
**Size:** 10
**Orientation:**
**Meters:**
**Manual:**
**0.25% Pb:** No
**Spare Parts Only:** No
**Approved:**
**Renewed:**
**Bypass:**
**Notes:** model designation changed to 909

---

**Type:** RP
**Manufacturer:** Watts
**Model:** 919AQT
**Size:** 3/4
**Orientation:** VUVD
**Meters:**
**Manual:** 9
**0.25% Pb:** No
**Spare Parts Only:** No
**Approved:** 14-Jun-2006
**Renewed:** 14-Jun-2018
**Bypass:**
**Shutoffs:** (vv),xx,ooo,hhhh,pppp,rrrrr

---

**Type:** RP
**Manufacturer:** Watts
**Model:** 919AQT
**Size:** 1
**Orientation:** VUVD
**Meters:**
**Manual:** 9
**0.25% Pb:** No
**Spare Parts Only:** No
**Approved:** 01-Jun-2006
**Renewed:** 01-Jun-2018
**Bypass:**
**Shutoffs:** (vv),xx,ooo,hhhh,pppp,rrrrr

---

**Type:** RP
**Manufacturer:** Watts
**Model:** 919AQT
**Size:** 1 1/4
**Orientation:** VUVD
**Meters:**
**Manual:** 9
**0.25% Pb:** No
**Spare Parts Only:** No
**Approved:** 05-Sep-2006
**Renewed:** 05-Sep-2018
**Bypass:**
**Shutoffs:** (vv),xx,ooo,hhhh,pppp,rrrrr

---

**Type:** RP
**Manufacturer:** Watts
**Model:** 919AQT
**Size:** 1 1/2
**Orientation:** VUVD
**Meters:**
**Manual:** 9
**0.25% Pb:** No
**Spare Parts Only:** No
**Approved:** 01-Jun-2006
**Renewed:** 01-Jun-2018
**Bypass:**
**Shutoffs:** (vv),xx,ooo,hhhh,pppp,rrrrr

---

**Type:** RP
**Manufacturer:** Watts
**Model:** 919AQT
**Size:** 2
**Orientation:** VUVD
**Meters:**
**Manual:** 9
**0.25% Pb:** No
**Spare Parts Only:** No
**Approved:** 01-Jun-2006
**Renewed:** 01-Jun-2018
**Bypass:**
**Shutoffs:** (vv),xx,ooo,hhhh,pppp,rrrrr

---

**Type:** RP
**Manufacturer:** Watts
**Model:** 919QT
**Size:** 3/4
**Orientation:** H
**Meters:**
**Manual:** 9
**0.25% Pb:** No
**Spare Parts Only:** No
**Approved:** 14-Jun-2006
**Renewed:** 14-Jun-2018
**Bypass:**
**Shutoffs:** (vv),xx,ooo,hhhh,pppp,rrrrr


2018 © University of Southern California

**Type:** RP
**Size:** 3/4
**Manual:** 9
**Approved:** 30-Aug-2006
**Shutoffs:** (vv),xx,ooo,hhhh,pppp,rrrrr
**Manufacturer:** Watts
**Orientation:** VD
**0.25% Pb:** No
**Renewed:** 30-Aug-2018
**Model:** 919QT
**Meters:**
**Spare Parts Only:** No
**Bypass:**

---

**Type:** RP
**Size:** 1
**Manual:** 9
**Approved:** 01-Jun-2006
**Shutoffs:** (vv),xx,ooo,hhhh,pppp,rrrrr
**Manufacturer:** Watts
**Orientation:** H
**0.25% Pb:** No
**Renewed:** 01-Jun-2018
**Model:** 919QT
**Meters:**
**Spare Parts Only:** No
**Bypass:**

---

**Type:** RP
**Size:** 1
**Manual:** 9
**Approved:** 30-Aug-2006
**Shutoffs:** (vv),xx,ooo,hhhh,pppp,rrrrr
**Manufacturer:** Watts
**Orientation:** VD
**0.25% Pb:** No
**Renewed:** 30-Aug-2018
**Model:** 919QT
**Meters:**
**Spare Parts Only:** No
**Bypass:**

---

**Type:** RP
**Size:** 1 1/4
**Manual:** 9
**Approved:** 01-Jun-2006
**Shutoffs:** (vv),xx,ooo,hhhh,pppp,rrrrr
**Manufacturer:** Watts
**Orientation:** H
**0.25% Pb:** No
**Renewed:** 01-Jun-2018
**Model:** 919QT
**Meters:**
**Spare Parts Only:** No
**Bypass:**

---

**Type:** RP
**Size:** 1 1/4
**Manual:** 9
**Approved:** 30-Aug-2006
**Shutoffs:** (vv),xx,ooo,hhhh,pppp,rrrrr
**Manufacturer:** Watts
**Orientation:** VD
**0.25% Pb:** No
**Renewed:** 30-Aug-2018
**Model:** 919QT
**Meters:**
**Spare Parts Only:** No
**Bypass:**

---

**Type:** RP
**Size:** 1 1/2
**Manual:** 9
**Approved:** 01-Jun-2006
**Shutoffs:** (vv),xx,ooo,hhhh,pppp,rrrrr
**Manufacturer:** Watts
**Orientation:** H
**0.25% Pb:** No
**Renewed:** 01-Jun-2018
**Model:** 919QT
**Meters:**
**Spare Parts Only:** No
**Bypass:**

---

**Type:** RP
**Size:** 1 1/2
**Manual:** 9
**Approved:** 30-Aug-2006
**Shutoffs:** (vv),xx,ooo,hhhh,pppp,rrrrr
**Manufacturer:** Watts
**Orientation:** VD
**0.25% Pb:** No
**Renewed:** 30-Aug-2018
**Model:** 919QT
**Meters:**
**Spare Parts Only:** No
**Bypass:**

**Type:** RP
**Size:** 2
**Manual:** 9
**Approved:** 01-Jun-2006
**Shutoffs:** (vv),xx,ooo,hhhh,pppp,rrrrr
**Manufacturer:** Watts
**Orientation:** H
**0.25% Pb:** No
**Renewed:** 01-Jun-2018
**Model:** 919QT
**Meters:**
**Spare Parts Only:** No
**Bypass:**

---

**Type:** RP
**Size:** 2
**Manual:** 9
**Approved:** 30-Aug-2006
**Shutoffs:** (vv),xx,ooo,hhhh,pppp,rrrrr
**Manufacturer:** Watts
**Orientation:** VD
**0.25% Pb:** No
**Renewed:** 30-Aug-2018
**Model:** 919QT
**Meters:**
**Spare Parts Only:** No
**Bypass:**

---

**Type:** RP
**Size:** 3/4
**Manual:** 9
**Approved:** 14-Jun-2006
**Shutoffs:** (vv),xx,ooo,hhhh,pppp,rrrrr
**Manufacturer:** Watts
**Orientation:** VUVU
**0.25% Pb:** No
**Renewed:** 14-Jun-2018
**Model:** 919ZQT
**Meters:**
**Spare Parts Only:** No
**Bypass:**

---

**Type:** RP
**Size:** 1
**Manual:** 9
**Approved:** 01-Jun-2006
**Shutoffs:** (vv),xx,ooo,hhhh,pppp,rrrrr
**Manufacturer:** Watts
**Orientation:** VUVU
**0.25% Pb:** No
**Renewed:** 01-Jun-2018
**Model:** 919ZQT
**Meters:**
**Spare Parts Only:** No
**Bypass:**

---

**Type:** RP
**Size:** 1 1/4
**Manual:** 9
**Approved:** 01-Jun-2006
**Shutoffs:** (vv),xx,ooo,hhhh,pppp,rrrrr
**Manufacturer:** Watts
**Orientation:** VUVU
**0.25% Pb:** No
**Renewed:** 01-Jun-2018
**Model:** 919ZQT
**Meters:**
**Spare Parts Only:** No
**Bypass:**

---

**Type:** RP
**Size:** 1 1/2
**Manual:** 9
**Approved:** 01-Jun-2006
**Shutoffs:** (vv),xx,ooo,hhhh,pppp,rrrrr
**Manufacturer:** Watts
**Orientation:** VUVU
**0.25% Pb:** No
**Renewed:** 01-Jun-2018
**Model:** 919ZQT
**Meters:**
**Spare Parts Only:** No
**Bypass:**

---

**Type:** RP
**Size:** 2
**Manual:** 9
**Approved:** 01-Jun-2006
**Shutoffs:** (vv),xx,ooo,hhhh,pppp,rrrrr
**Manufacturer:** Watts
**Orientation:** VUVU
**0.25% Pb:** No
**Renewed:** 01-Jun-2018
**Model:** 919ZQT
**Meters:**
**Spare Parts Only:** No
**Bypass:**


2018 © University of Southern California

**Type:** RP **Manufacturer:** Watts **Model:** 957
**Size:** 2 1/2 **Orientation:** H **Meters:**
**Manual:** 9 **0.25% Pb:** No **Spare Parts Only:** No
**Approved:** 07-Oct-2002 **Renewed:** 07-Oct-2017 **Bypass:**
**Shutoffs:** (ppp),qqq,aaaa,bbbb
**Notes:** Check valve discs may be black EPDM or orange Silicone

---

**Type:** RP **Manufacturer:** Watts **Model:** 957
**Size:** 2 1/2 **Orientation:** H **Meters:**
**Manual:** 9 **0.25% Pb:** Yes **Spare Parts Only:** No
**Approved:** 07-Oct-2002 **Renewed:** 07-Oct-2017 **Bypass:**
**Shutoffs:** zzz,dddd,eeee,gggg,kkkk,llll,mmmm,nnnn,nnnnn
**Notes:** Check valve discs may be black EPDM or orange Silicone

---

**Type:** RP **Manufacturer:** Watts **Model:** 957
**Size:** 3 **Orientation:** H **Meters:**
**Manual:** 9 **0.25% Pb:** No **Spare Parts Only:** No
**Approved:** 07-Oct-2002 **Renewed:** 07-Oct-2017 **Bypass:**
**Shutoffs:** (ppp),qqq,aaaa,bbbb
**Notes:** Check valve discs may be black EPDM or orange Silicone

---

**Type:** RP **Manufacturer:** Watts **Model:** 957
**Size:** 3 **Orientation:** H **Meters:**
**Manual:** 9 **0.25% Pb:** Yes **Spare Parts Only:** No
**Approved:** 07-Oct-2002 **Renewed:** 07-Oct-2017 **Bypass:**
**Shutoffs:** zzz,dddd,eeee,gggg,kkkk,llll,mmmm,nnnn,nnnnn
**Notes:** Check valve discs may be black EPDM or orange Silicone

---

**Type:** RP **Manufacturer:** Watts **Model:** 957
**Size:** 4 **Orientation:** H **Meters:**
**Manual:** 9 **0.25% Pb:** No **Spare Parts Only:** No
**Approved:** 07-Oct-2002 **Renewed:** 07-Oct-2017 **Bypass:**
**Shutoffs:** (ppp),qqq,aaaa,bbbb
**Notes:** Check valve discs may be black EPDM or orange Silicone

---

**Type:** RP **Manufacturer:** Watts **Model:** 957
**Size:** 4 **Orientation:** H **Meters:**
**Manual:** 9 **0.25% Pb:** Yes **Spare Parts Only:** No
**Approved:** 07-Oct-2002 **Renewed:** 07-Oct-2017 **Bypass:**
**Shutoffs:** zzz,dddd,eeee,gggg,kkkk,llll,mmmm,nnnn,nnnnn
**Notes:** Check valve discs may be black EPDM or orange Silicone

**Type:** RP
**Manufacturer:** Watts
**Model:** 957
**Size:** 6
**Orientation:** H
**Meters:**
**Manual:** 9
**0.25% Pb:** No
**Spare Parts Only:** No
**Approved:** 20-Dec-2004
**Renewed:** 20-Dec-2016
**Bypass:**
**Shutoffs:** (ppp),qqq,aaaa,bbbb

---

**Type:** RP
**Manufacturer:** Watts
**Model:** 957
**Size:** 6
**Orientation:** H
**Meters:**
**Manual:** 9
**0.25% Pb:** Yes
**Spare Parts Only:** No
**Approved:** 20-Dec-2004
**Renewed:** 20-Dec-2016
**Bypass:**
**Shutoffs:** zzz,dddd,eeee,gggg,kkkk,llll,mmmm,nnnn,nnnnn

---

**Type:** RP
**Manufacturer:** Watts
**Model:** 957
**Size:** 8
**Orientation:** H
**Meters:**
**Manual:** 9
**0.25% Pb:** No
**Spare Parts Only:** No
**Approved:** 13-Aug-2007
**Renewed:** 13-Aug-2016
**Bypass:**
**Shutoffs:** (ppp),qqq,aaaa,bbbb

---

**Type:** RP
**Manufacturer:** Watts
**Model:** 957
**Size:** 8
**Orientation:** H
**Meters:**
**Manual:** 9
**0.25% Pb:** Yes
**Spare Parts Only:** No
**Approved:** 13-Aug-2007
**Renewed:** 13-Aug-2016
**Bypass:**
**Shutoffs:** zzz,cccc,dddd,eeee,gggg,kkkk,llll,mmmm,nnnn,nnnnn

---

**Type:** RP
**Manufacturer:** Watts
**Model:** 957
**Size:** 10
**Orientation:** H
**Meters:**
**Manual:** 9
**0.25% Pb:** No
**Spare Parts Only:** No
**Approved:** 22-Jul-2009
**Renewed:** 22-Jul-2018
**Bypass:**
**Shutoffs:** (ppp),qqq,aaaa,bbbb

---

**Type:** RP
**Manufacturer:** Watts
**Model:** 957
**Size:** 10
**Orientation:** H
**Meters:**
**Manual:** 9
**0.25% Pb:** Yes
**Spare Parts Only:** No
**Approved:** 22-Jul-2009
**Renewed:** 22-Jul-2018
**Bypass:**
**Shutoffs:** zzz,cccc,dddd,eeee,gggg,kkkk,llll,mmmm,nnnn,nnnnn


2018 © University of Southern California

**Type:** RP
**Manufacturer:** Watts
**Model:** 957 BF
**Size:** 4
**Orientation:** H
**Meters:**
**Manual:** 9
**0.25% Pb:** Yes
**Spare Parts Only:** No
**Approved:** 17-Jan-2008
**Renewed:** 17-Jan-2017
**Bypass:**
**Shutoffs:** (yyy)
**Notes:** Check valve discs may be black EPDM or orange Silicone

---

**Type:** RP
**Manufacturer:** Watts
**Model:** 957 BF
**Size:** 6
**Orientation:** H
**Meters:**
**Manual:** 9
**0.25% Pb:** Yes
**Spare Parts Only:** No
**Approved:** 17-Jan-2008
**Renewed:** 17-Jan-2017
**Bypass:**
**Shutoffs:** (yyy)

---

**Type:** RP
**Manufacturer:** Watts
**Model:** 957N
**Size:** 2 1/2
**Orientation:** VUVD
**Meters:**
**Manual:** 9
**0.25% Pb:** No
**Spare Parts Only:** No
**Approved:** 14-Apr-2003
**Renewed:** 14-Apr-2018
**Bypass:**
**Shutoffs:** (ppp),qqq,aaaa,bbbb,nnnnn
**Notes:** Check valve discs may be black EPDM or orange Silicone

---

**Type:** RP
**Manufacturer:** Watts
**Model:** 957N
**Size:** 2 1/2
**Orientation:** VUVD
**Meters:**
**Manual:** 9
**0.25% Pb:** Yes
**Spare Parts Only:** No
**Approved:** 14-Apr-2003
**Renewed:** 14-Apr-2018
**Bypass:**
**Shutoffs:** yyy,zzz,dddd,eeee,gggg,kkkk,llll,mmmm,nnnn
**Notes:** Check valve discs may be black EPDM or orange Silicone

---

**Type:** RP
**Manufacturer:** Watts
**Model:** 957N
**Size:** 3
**Orientation:** VUVD
**Meters:**
**Manual:** 9
**0.25% Pb:** No
**Spare Parts Only:** No
**Approved:** 14-Apr-2003
**Renewed:** 14-Apr-2018
**Bypass:**
**Shutoffs:** (ppp),qqq,aaaa,bbbb,nnnnn
**Notes:** Check valve discs may be black EPDM or orange Silicone

---

**Type:** RP
**Manufacturer:** Watts
**Model:** 957N
**Size:** 3
**Orientation:** VUVD
**Meters:**
**Manual:** 9
**0.25% Pb:** Yes
**Spare Parts Only:** No
**Approved:** 14-Apr-2003
**Renewed:** 14-Apr-2018
**Bypass:**
**Shutoffs:** yyy,zzz,dddd,eeee,gggg,kkkk,llll,mmmm,nnnn
**Notes:** Check valve discs may be black EPDM or orange Silicone

**Type:** RP
**Manufacturer:** Watts
**Model:** 957N
**Size:** 4
**Orientation:** VUVD
**Meters:**
**Manual:** 9
**0.25% Pb:** No
**Spare Parts Only:** No
**Approved:** 14-Apr-2003
**Renewed:** 14-Apr-2018
**Bypass:**
**Shutoffs:** (ppp),qqq,aaaa,bbbb,nnnnn
**Notes:** Check valve discs may be black EPDM or orange Silicone

---

**Type:** RP
**Manufacturer:** Watts
**Model:** 957N
**Size:** 4
**Orientation:** VUVD
**Meters:**
**Manual:** 9
**0.25% Pb:** Yes
**Spare Parts Only:** No
**Approved:** 14-Apr-2003
**Renewed:** 14-Apr-2018
**Bypass:**
**Shutoffs:** yyy,zzz,dddd,eeee,gggg,kkkk,llll,mmmm,nnnn
**Notes:** Check valve discs may be black EPDM or orange Silicone

---

**Type:** RP
**Manufacturer:** Watts
**Model:** 957N
**Size:** 6
**Orientation:** VUVD
**Meters:**
**Manual:** 9
**0.25% Pb:** No
**Spare Parts Only:** No
**Approved:** 15-Nov-2010
**Renewed:** 15-Nov-2016
**Bypass:**
**Shutoffs:** ppp,qqq,aaaa,bbbb,nnnnn

---

**Type:** RP
**Manufacturer:** Watts
**Model:** 957N
**Size:** 6
**Orientation:** VUVD
**Meters:**
**Manual:** 9
**0.25% Pb:** Yes
**Spare Parts Only:** No
**Approved:** 15-Nov-2010
**Renewed:** 15-Nov-2016
**Bypass:**
**Shutoffs:** zzz,dddd,eeee,gggg,kkkk,llll,mmmm,nnnn

---

**Type:** RP
**Manufacturer:** Watts
**Model:** 957N
**Size:** 8
**Orientation:** VUVD
**Meters:**
**Manual:** 9
**0.25% Pb:** No
**Spare Parts Only:** No
**Approved:** 14-Jun-2013
**Renewed:** 14-Jun-2016
**Bypass:**
**Shutoffs:** ppp, qqq, aaaa, bbbb,

---

**Type:** RP
**Manufacturer:** Watts
**Model:** 957N
**Size:** 8
**Orientation:** VUVD
**Meters:**
**Manual:** 9
**0.25% Pb:** Yes
**Spare Parts Only:** No
**Approved:** 14-Jun-2013
**Renewed:** 14-Jun-2016
**Bypass:**
**Shutoffs:** (yyy), zzz, dddd, eeee, gggg, kkkk, llll, mmmm, nnnn


2018 © University of Southern California

**Type:** RP
**Manufacturer:** Watts
**Model:** 957NQT
**Size:** 2 1/2
**Orientation:** VUVD
**Meters:**
**Manual:** 9
**0.25% Pb:** Yes
**Spare Parts Only:** No
**Approved:** 20-Oct-2009
**Renewed:** 20-Oct-2018
**Bypass:**
**Shutoffs:** (fffff)
**Notes:** Check valve discs may be black EPDM or orange Silicone

---

**Type:** RP
**Manufacturer:** Watts
**Model:** 957NQT
**Size:** 3
**Orientation:** VUVD
**Meters:**
**Manual:** 9
**0.25% Pb:** Yes
**Spare Parts Only:** No
**Approved:** 20-Oct-2009
**Renewed:** 20-Oct-2018
**Bypass:**
**Shutoffs:** (fffff)
**Notes:** Check valve discs may be black EPDM or orange Silicone

---

**Type:** RP
**Manufacturer:** Watts
**Model:** 957NQT
**Size:** 4
**Orientation:** VUVD
**Meters:**
**Manual:** 9
**0.25% Pb:** Yes
**Spare Parts Only:** No
**Approved:** 20-Oct-2009
**Renewed:** 20-Oct-2018
**Bypass:**
**Shutoffs:** (fffff)
**Notes:** Check valve discs may be black EPDM or orange Silicone

---

**Type:** RP
**Manufacturer:** Watts
**Model:** 957QT
**Size:** 2 1/2
**Orientation:** H
**Meters:**
**Manual:** 9
**0.25% Pb:** Yes
**Spare Parts Only:** No
**Approved:** 20-Oct-2009
**Renewed:** 20-Oct-2018
**Bypass:**
**Shutoffs:** (fffff)
**Notes:** Check valve discs may be black EPDM or orange Silicone

---

**Type:** RP
**Manufacturer:** Watts
**Model:** 957QT
**Size:** 3
**Orientation:** H
**Meters:**
**Manual:** 9
**0.25% Pb:** Yes
**Spare Parts Only:** No
**Approved:** 20-Oct-2009
**Renewed:** 20-Oct-2018
**Bypass:**
**Shutoffs:** (fffff)
**Notes:** Check valve discs may be black EPDM or orange Silicone

---

**Type:** RP
**Manufacturer:** Watts
**Model:** 957QT
**Size:** 4
**Orientation:** H
**Meters:**
**Manual:** 9
**0.25% Pb:** Yes
**Spare Parts Only:** No
**Approved:** 20-Oct-2009
**Renewed:** 20-Oct-2018
**Bypass:**
**Shutoffs:** (fffff)
**Notes:** Check valve discs may be black EPDM or orange Silicone

**Type:** RP **Manufacturer:** Watts **Model:** 957Z
**Size:** 2 1/2 **Orientation:** VUVU **Meters:**
**Manual:** 9 **0.25% Pb:** No **Spare Parts Only:** No
**Approved:** 14-Apr-2003 **Renewed:** 14-Apr-2018 **Bypass:**
**Shutoffs:** (ppp),qqq,aaaa,bbbb,nnnnn
**Notes:** Check valve discs may be black EPDM or orange Silicone

---

**Type:** RP **Manufacturer:** Watts **Model:** 957Z
**Size:** 2 1/2 **Orientation:** VUVU **Meters:**
**Manual:** 9 **0.25% Pb:** Yes **Spare Parts Only:** No
**Approved:** 14-Apr-2003 **Renewed:** 14-Apr-2018 **Bypass:**
**Shutoffs:** yyy,zzz,dddd,eeee,gggg,kkkk,llll,mmmm,nnnn
**Notes:** Check valve discs may be black EPDM or orange Silicone

---

**Type:** RP **Manufacturer:** Watts **Model:** 957Z
**Size:** 3 **Orientation:** VUVU **Meters:**
**Manual:** 9 **0.25% Pb:** No **Spare Parts Only:** No
**Approved:** 14-Apr-2003 **Renewed:** 14-Apr-2018 **Bypass:**
**Shutoffs:** (ppp),qqq,aaaa,bbbb,nnnnn
**Notes:** Check valve discs may be black EPDM or orange Silicone

---

**Type:** RP **Manufacturer:** Watts **Model:** 957Z
**Size:** 3 **Orientation:** VUVU **Meters:**
**Manual:** 9 **0.25% Pb:** Yes **Spare Parts Only:** No
**Approved:** 14-Apr-2003 **Renewed:** 14-Apr-2018 **Bypass:**
**Shutoffs:** yyy,zzz,dddd,eeee,gggg,kkkk,llll,mmmm,nnnn
**Notes:** Check valve discs may be black EPDM or orange Silicone

---

**Type:** RP **Manufacturer:** Watts **Model:** 957Z
**Size:** 4 **Orientation:** VUVU **Meters:**
**Manual:** 9 **0.25% Pb:** No **Spare Parts Only:** No
**Approved:** 14-Apr-2003 **Renewed:** 14-Apr-2018 **Bypass:**
**Shutoffs:** (ppp),qqq,aaaa,bbbb,nnnnn
**Notes:** Check valve discs may be black EPDM or orange Silicone

---

**Type:** RP **Manufacturer:** Watts **Model:** 957Z
**Size:** 4 **Orientation:** VUVU **Meters:**
**Manual:** 9 **0.25% Pb:** Yes **Spare Parts Only:** No
**Approved:** 14-Apr-2003 **Renewed:** 14-Apr-2018 **Bypass:**
**Shutoffs:** yyy,zzz,dddd,eeee,gggg,kkkk,llll,mmmm,nnnn
**Notes:** Check valve discs may be black EPDM or orange Silicone


2018 © University of Southern California

**Type:** RP
**Manufacturer:** Watts
**Model:** 957Z
**Size:** 8
**Orientation:** VUVU
**Meters:**
**Manual:** 9
**0.25% Pb:** No
**Spare Parts Only:** No
**Approved:** 14-Jun-2013
**Renewed:** 14-Jun-2016
**Bypass:**
**Shutoffs:** ppp, qqq, aaaa, bbbb,

---

**Type:** RP
**Manufacturer:** Watts
**Model:** 957Z
**Size:** 8
**Orientation:** VUVU
**Meters:**
**Manual:** 9
**0.25% Pb:** Yes
**Spare Parts Only:** No
**Approved:** 14-Jun-2013
**Renewed:** 14-Jun-2016
**Bypass:**
**Shutoffs:** (yyy), zzz, dddd, eeee, gggg, kkkk, llll, mmmm, nnnn

---

**Type:** RP
**Manufacturer:** Watts
**Model:** 957ZQT
**Size:** 2 1/2
**Orientation:** VUVU
**Meters:**
**Manual:** 9
**0.25% Pb:** Yes
**Spare Parts Only:** No
**Approved:** 20-Oct-2009
**Renewed:** 20-Oct-2018
**Bypass:**
**Shutoffs:** (fffff)
**Notes:** Check valve discs may be black EPDM or orange Silicone

---

**Type:** RP
**Manufacturer:** Watts
**Model:** 957ZQT
**Size:** 3
**Orientation:** VUVU
**Meters:**
**Manual:** 9
**0.25% Pb:** Yes
**Spare Parts Only:** No
**Approved:** 20-Oct-2009
**Renewed:** 20-Oct-2018
**Bypass:**
**Shutoffs:** (fffff)
**Notes:** Check valve discs may be black EPDM or orange Silicone

---

**Type:** RP
**Manufacturer:** Watts
**Model:** 957ZQT
**Size:** 4
**Orientation:** VUVU
**Meters:**
**Manual:** 9
**0.25% Pb:** Yes
**Spare Parts Only:** No
**Approved:** 20-Oct-2009
**Renewed:** 20-Oct-2018
**Bypass:**
**Shutoffs:** (fffff)
**Notes:** Check valve discs may be black EPDM or orange Silicone

---

**Type:** RP
**Manufacturer:** Watts
**Model:** 967
**Size:** 2 1/2
**Orientation:** H
**Meters:**
**Manual:** 9
**0.25% Pb:** No
**Spare Parts Only:** No
**Approved:** 07-Oct-2002
**Renewed:** 07-Oct-2017
**Bypass:**
**Shutoffs:** (ppp),qqq,zzz,aaaa,bbbb,dddd,eeee,ffff,gggg,kkkk,llll,mmmm,nnnn,nnnnn

**Type:** RP **Manufacturer:** Watts **Model:** 967
**Size:** 3 **Orientation:** H **Meters:**
**Manual:** 9 **0.25% Pb:** No **Spare Parts Only:** No
**Approved:** 07-Oct-2002 **Renewed:** 07-Oct-2017 **Bypass:**
**Shutoffs:** (ppp),qqq,zzz,aaaa,bbbb,dddd,eeee,ffff,gggg,kkkk,llll,mmmm,nnnn,nnnnn

---

**Type:** RP **Manufacturer:** Watts **Model:** 967
**Size:** 4 **Orientation:** H **Meters:**
**Manual:** 9 **0.25% Pb:** No **Spare Parts Only:** No
**Approved:** 18-Jan-2005 **Renewed:** 18-Jan-2017 **Bypass:**
**Shutoffs:** (ppp),qqq,aaaa,bbbb,gggg,kkkk,llll,mmmm,nnnn,nnnnn

---

**Type:** RP **Manufacturer:** Watts **Model:** 967
**Size:** 6 **Orientation:** H **Meters:**
**Manual:** 9 **0.25% Pb:** No **Spare Parts Only:** No
**Approved:** 13-Aug-2007 **Renewed:** 13-Aug-2016 **Bypass:**
**Shutoffs:** (ppp),qqq,sss, ttt, aaaa,bbbb,cccc,dddd,kkkk,llll,mmmm,nnnn,nnnnn

---

**Type:** RP **Manufacturer:** Watts **Model:** 967
**Size:** 8 **Orientation:** H **Meters:**
**Manual:** 9 **0.25% Pb:** No **Spare Parts Only:** No
**Approved:** 22-Jul-2009 **Renewed:** 22-Jul-2018 **Bypass:**
**Shutoffs:** (ppp),qqq,sss,ttt,zzz,aaaa,bbbb,cccc,dddd,eeee,gggg,kkkk,llll,mmmm,nnnn,nnnnn

---

**Type:** RP **Manufacturer:** Watts **Model:** 967
**Size:** 10 **Orientation:** H **Meters:**
**Manual:** 9 **0.25% Pb:** No **Spare Parts Only:** No
**Approved:** 22-Jul-2009 **Renewed:** 22-Jul-2018 **Bypass:**
**Shutoffs:** (ppp),qqq,sss,ttt,zzz,aaaa,bbbb,cccc,dddd,eeee,gggg,kkkk,llll,mmmm,nnnn

---

**Type:** RP **Manufacturer:** Watts **Model:** 967N
**Size:** 2 1/2 **Orientation:** VUVD **Meters:**
**Manual:** 9 **0.25% Pb:** No **Spare Parts Only:** No
**Approved:** 14-Apr-2003 **Renewed:** 14-Apr-2018 **Bypass:**
**Shutoffs:** (ppp),qqq,yyy,zzz,aaaa,bbbb,dddd,eeee,gggg,kkkk,llll,mmmm,nnnn,nnnnn

---

**Type:** RP **Manufacturer:** Watts **Model:** 967N
**Size:** 3 **Orientation:** VUVD **Meters:**
**Manual:** 9 **0.25% Pb:** No **Spare Parts Only:** No
**Approved:** 14-Apr-2003 **Renewed:** 14-Apr-2018 **Bypass:**
**Shutoffs:** (ppp),qqq,zzz,aaaa,bbbb,dddd,eeee,ffff,gggg,kkkk,llll,mmmm,nnnn,nnnnn


2018 © University of Southern California

**Type:** RP **Manufacturer:** Watts **Model:** 967N
**Size:** 4 **Orientation:** VUVD **Meters:**
**Manual:** 9 **0.25% Pb:** No **Spare Parts Only:** No
**Approved:** 15-Nov-2010 **Renewed:** 15-Nov-2016 **Bypass:**
**Shutoffs:** ppp,qqq,aaaa,bbbb,nnnnn

---

**Type:** RP **Manufacturer:** Watts **Model:** 967N
**Size:** 4 **Orientation:** VUVD **Meters:**
**Manual:** 9 **0.25% Pb:** Yes **Spare Parts Only:** No
**Approved:** 15-Nov-2010 **Renewed:** 15-Nov-2016 **Bypass:**
**Shutoffs:** yyy,zzz,dddd,eeee,gggg,kkkk,llll,mmmm,nnnn

---

**Type:** RP **Manufacturer:** Watts **Model:** 967N
**Size:** 6 **Orientation:** VUVD **Meters:**
**Manual:** 9 **0.25% Pb:** No **Spare Parts Only:** No
**Approved:** 14-Jun-2013 **Renewed:** 14-Jun-2016 **Bypass:**
**Shutoffs:** ppp, qqq, aaaa, bbbb,

---

**Type:** RP **Manufacturer:** Watts **Model:** 967N
**Size:** 6 **Orientation:** VUVD **Meters:**
**Manual:** 9 **0.25% Pb:** Yes **Spare Parts Only:** No
**Approved:** 14-Jun-2013 **Renewed:** 14-Jun-2016 **Bypass:**
**Shutoffs:** (yyy), zzz, dddd, eeee, gggg, kkkk, llll, mmmm, nnnn

---

**Type:** RP **Manufacturer:** Watts **Model:** 967Z
**Size:** 2 1/2 **Orientation:** VUVU **Meters:**
**Manual:** 9 **0.25% Pb:** No **Spare Parts Only:** No
**Approved:** 14-Apr-2003 **Renewed:** 14-Apr-2018 **Bypass:**
**Shutoffs:** (ppp),qqq,yyy,zzz,aaaa,bbbb,dddd,eeee,gggg,kkkk,llll,mmmm,nnnn,nnnnn

---

**Type:** RP **Manufacturer:** Watts **Model:** 967Z
**Size:** 3 **Orientation:** VUVU **Meters:**
**Manual:** 9 **0.25% Pb:** No **Spare Parts Only:** No
**Approved:** 14-Apr-2003 **Renewed:** 14-Apr-2018 **Bypass:**
**Shutoffs:** (ppp),qqq,zzz,aaaa,bbbb,dddd,eeee,gggg,kkkk,llll,mmmm,nnnn,nnnnn

---

**Type:** RP **Manufacturer:** Watts **Model:** 967Z
**Size:** 6 **Orientation:** VUVU **Meters:**
**Manual:** 9 **0.25% Pb:** No **Spare Parts Only:** No
**Approved:** 14-Jun-2013 **Renewed:** 14-Jun-2016 **Bypass:**
**Shutoffs:** ppp, qqq, aaaa, bbbb,

**Type:** RP
**Manufacturer:** Watts
**Model:** 967Z
**Size:** 6
**Orientation:** VUVU
**Meters:**
**Manual:** 9
**0.25% Pb:** Yes
**Spare Parts Only:** No
**Approved:** 14-Jun-2013
**Renewed:** 14-Jun-2016
**Bypass:**
**Shutoffs:** (yyy), zzz, dddd, eeee, gggg, kkkk, llll, mmmm, nnnn

---

**Type:** RP
**Manufacturer:** Watts
**Model:** 990
**Size:** 4
**Orientation:** H
**Meters:**
**Manual:** 8
**0.25% Pb:** No
**Spare Parts Only:** Yes
**Approved:** 01-Nov-1992
**Renewed:** 01-Nov-2016
**Bypass:**
**Shutoffs:** oo,gg,hh,pp,tt,uu,yy

---

**Type:** RP
**Manufacturer:** Watts
**Model:** 990
**Size:** 8
**Orientation:** H
**Meters:**
**Manual:** 8
**0.25% Pb:** No
**Spare Parts Only:** Yes
**Approved:** 13-Jan-1993
**Renewed:** 13-Jan-2017
**Bypass:**
**Shutoffs:** oo,gg,hh,pp,tt,uu,yy

---

**Type:** RP
**Manufacturer:** Watts
**Model:** 990QTFDA
**Size:** 4
**Orientation:** H
**Meters:**
**Manual:** 8
**0.25% Pb:** No
**Spare Parts Only:** Yes
**Approved:** 13-Jan-1993
**Renewed:** 13-Jan-2017
**Bypass:**
**Shutoffs:** ww

---

**Type:** RP
**Manufacturer:** Watts
**Model:** 990QTFDA
**Size:** 8
**Orientation:** H
**Meters:**
**Manual:** 8
**0.25% Pb:** No
**Spare Parts Only:** Yes
**Approved:** 13-Jan-1993
**Renewed:** 13-Jan-2017
**Bypass:**
**Shutoffs:** ww

---

**Type:** RP
**Manufacturer:** Watts
**Model:** 992
**Size:** 4
**Orientation:** H
**Meters:**
**Manual:** 8
**0.25% Pb:** No
**Spare Parts Only:** Yes
**Approved:** 01-Nov-1992
**Renewed:** 01-Nov-2016
**Bypass:**
**Shutoffs:** oo

---

**Type:** RP
**Manufacturer:** Watts
**Model:** 992
**Size:** 10
**Orientation:** H
**Meters:**
**Manual:** 8
**0.25% Pb:** No
**Spare Parts Only:** Yes
**Approved:** 13-Jan-1993
**Renewed:** 13-Jan-2017
**Bypass:**
**Shutoffs:** oo


2018 © University of Southern California

**Type:** RP
**Manufacturer:** Watts
**Model:** 994
**Size:** 2 1/2
**Orientation:** H
**Meters:**
**Manual:** 8
**0.25% Pb:** No
**Spare Parts Only:** No
**Approved:** 15-Apr-1994
**Renewed:** 15-Apr-2018
**Bypass:**
**Shutoffs:** (tt),ee,ff,gg,hh,pp,uu,ccc,ddd

---

**Type:** RP
**Manufacturer:** Watts
**Model:** 994
**Size:** 2 1/2
**Orientation:** H
**Meters:**
**Manual:** 8
**0.25% Pb:** Yes
**Spare Parts Only:** No
**Approved:** 15-Apr-1994
**Renewed:** 15-Apr-2018
**Bypass:**
**Shutoffs:** ll,mm,oo,ffff,gggg

---

**Type:** RP
**Manufacturer:** Watts
**Model:** 994
**Size:** 3
**Orientation:** H
**Meters:**
**Manual:** 8
**0.25% Pb:** No
**Spare Parts Only:** No
**Approved:** 15-Apr-1994
**Renewed:** 15-Apr-2018
**Bypass:**
**Shutoffs:** (tt),ee,ff,gg,hh,pp,uu,ccc,ddd

---

**Type:** RP
**Manufacturer:** Watts
**Model:** 994
**Size:** 3
**Orientation:** H
**Meters:**
**Manual:** 8
**0.25% Pb:** Yes
**Spare Parts Only:** No
**Approved:** 15-Apr-1994
**Renewed:** 15-Apr-2018
**Bypass:**
**Shutoffs:** ll,mm,oo,ffff,gggg

---

**Type:** RP
**Manufacturer:** Watts
**Model:** 994
**Size:** 4
**Orientation:** H
**Meters:**
**Manual:** 8
**0.25% Pb:** No
**Spare Parts Only:** No
**Approved:** 15-Apr-1994
**Renewed:** 15-Apr-2018
**Bypass:**
**Shutoffs:** (tt),ee,ff,gg,hh,pp,uu,ccc,ddd

---

**Type:** RP
**Manufacturer:** Watts
**Model:** 994
**Size:** 4
**Orientation:** H
**Meters:**
**Manual:** 8
**0.25% Pb:** Yes
**Spare Parts Only:** No
**Approved:** 15-Apr-1994
**Renewed:** 15-Apr-2018
**Bypass:**
**Shutoffs:** ll,mm,oo,ffff,gggg

---

**Type:** RP
**Manufacturer:** Watts
**Model:** 994
**Size:** 6
**Orientation:** H
**Meters:**
**Manual:** 8
**0.25% Pb:** No
**Spare Parts Only:** No
**Approved:** 22-Sep-1997
**Renewed:** 22-Sep-2018
**Bypass:**
**Shutoffs:** (tt),ee,ff,gg,hh,pp,uu,ccc,ddd

**Type:** RP
**Size:** 6
**Manual:** 8
**Approved:** 22-Sep-1997
**Shutoffs:** ll,mm,oo,ffff,gggg

**Manufacturer:** Watts
**Orientation:** H
**0.25% Pb:** Yes
**Renewed:** 22-Sep-2018

**Model:** 994
**Meters:**
**Spare Parts Only:** No
**Bypass:**

---

**Type:** RP
**Size:** 1/2
**Manual:** 9
**Approved:** 13-Apr-2000
**Shutoffs:** int

**Manufacturer:** Watts
**Orientation:** H
**0.25% Pb:** No
**Renewed:** 13-Apr-2018

**Model:** 995QT
**Meters:**
**Spare Parts Only:** Yes
**Bypass:**

---

**Type:** RP
**Size:** 3/4
**Manual:** 9
**Approved:** 13-Apr-2000
**Shutoffs:** int

**Manufacturer:** Watts
**Orientation:** H
**0.25% Pb:** No
**Renewed:** 13-Apr-2018

**Model:** 995QT
**Meters:**
**Spare Parts Only:** Yes
**Bypass:**

---

**Type:** RP
**Size:** 1
**Manual:** 9
**Approved:** 14-Jan-1999
**Shutoffs:** int

**Manufacturer:** Watts
**Orientation:** H
**0.25% Pb:** No
**Renewed:** 14-Jan-2017

**Model:** 995QT
**Meters:**
**Spare Parts Only:** Yes
**Bypass:**

---

**Type:** RP
**Size:** 1 1/4
**Manual:** 9
**Approved:** 28-Mar-2002
**Shutoffs:** int

**Manufacturer:** Watts
**Orientation:** H
**0.25% Pb:** No
**Renewed:** 28-Mar-2017

**Model:** 995QT
**Meters:**
**Spare Parts Only:** Yes
**Bypass:**

---

**Type:** RP
**Size:** 1 1/2
**Manual:** 9
**Approved:** 28-Mar-2002
**Shutoffs:** int

**Manufacturer:** Watts
**Orientation:** H
**0.25% Pb:** No
**Renewed:** 28-Mar-2017

**Model:** 995QT
**Meters:**
**Spare Parts Only:** Yes
**Bypass:**

---

**Type:** RP
**Size:** 1 1/4
**Manual:** 5
**Approved:** 07-Feb-1980
**Shutoffs:** (vv),xx,ooo,hhhh,pppp

**Manufacturer:** Watts
**Orientation:** H
**0.25% Pb:** No
**Renewed:** 07-Feb-2016

**Model:** FAE909HWQT
**Meters:**
**Spare Parts Only:** Yes
**Bypass:**


2018 © University of Southern California

**Type:** RP
**Size:** 1 1/2
**Manual:** 5
**Approved:** 07-Feb-1980
**Shutoffs:** (vv),xx,ooo,hhhh,pppp
**Manufacturer:** Watts
**Orientation:** H
**0.25% Pb:** No
**Renewed:** 07-Feb-2016
**Model:** FAE909HWQT
**Meters:**
**Spare Parts Only:** Yes
**Bypass:**

---

**Type:** RP
**Size:** 2
**Manual:** 5
**Approved:** 07-Feb-1980
**Shutoffs:** (vv),xx,ooo,hhhh,pppp
**Manufacturer:** Watts
**Orientation:** H
**0.25% Pb:** No
**Renewed:** 07-Feb-2016
**Model:** FAE909HWQT
**Meters:**
**Spare Parts Only:** Yes
**Bypass:**

---

**Type:** RP
**Size:** 1 1/4
**Manual:** 6
**Approved:** 15-Jan-1982
**Shutoffs:** (vv),xx,ooo,hhhh,pppp
**Manufacturer:** Watts
**Orientation:** H
**0.25% Pb:** No
**Renewed:** 15-Jan-2018
**Model:** FAE909QT
**Meters:**
**Spare Parts Only:** Yes
**Bypass:**

---

**Type:** RP
**Size:** 1 1/2
**Manual:** 6
**Approved:** 15-Jan-1982
**Shutoffs:** (vv),xx,ooo,hhhh,pppp
**Manufacturer:** Watts
**Orientation:** H
**0.25% Pb:** No
**Renewed:** 15-Jan-2018
**Model:** FAE909QT
**Meters:**
**Spare Parts Only:** Yes
**Bypass:**

---

**Type:** RP
**Size:** 2
**Manual:** 6
**Approved:** 15-Jan-1982
**Shutoffs:** (vv),xx,ooo,hhhh,pppp
**Manufacturer:** Watts
**Orientation:** H
**0.25% Pb:** No
**Renewed:** 15-Jan-2018
**Model:** FAE909QT
**Meters:**
**Spare Parts Only:** Yes
**Bypass:**

---

**Type:** RP
**Size:** 2 1/2
**Manual:** 9
**Approved:** 12-Jan-2010
**Shutoffs:** (oo),ll,mm
**Manufacturer:** Watts
**Orientation:** H
**0.25% Pb:** Yes
**Renewed:** 12-Jan-2016
**Model:** LF009
**Meters:**
**Spare Parts Only:** No
**Bypass:**

---

**Type:** RP
**Size:** 3
**Manual:** 9
**Approved:** 12-Jan-2010
**Shutoffs:** (oo),ll,mm
**Manufacturer:** Watts
**Orientation:** H
**0.25% Pb:** Yes
**Renewed:** 12-Jan-2016
**Model:** LF009
**Meters:**
**Spare Parts Only:** No
**Bypass:**

**Type:** RP
**Size:** 1
**Manual:** 9
**Approved:** 13-Mar-2015
**Shutoffs:** (hhhh),rrrrr
**Manufacturer:** Watts
**Orientation:** H
**0.25% Pb:** Yes
**Renewed:** 13-Mar-2018
**Model:** LF009M2PCQT
**Meters:**
**Spare Parts Only:** No
**Bypass:**

---

**Type:** RP
**Size:** 2
**Manual:** 9
**Approved:** 13-Mar-2015
**Shutoffs:** (hhhh),rrrrr
**Manufacturer:** Watts
**Orientation:** H
**0.25% Pb:** Yes
**Renewed:** 13-Mar-2018
**Model:** LF009M2PCQT
**Meters:**
**Spare Parts Only:** No
**Bypass:**

---

**Type:** RP
**Size:** 1
**Manual:** 9
**Approved:** 11-Jan-2008
**Shutoffs:** (hhhh),rrrrr
**Manufacturer:** Watts
**Orientation:** H
**0.25% Pb:** Yes
**Renewed:** 11-Jan-2017
**Model:** LF009M2QT
**Meters:**
**Spare Parts Only:** No
**Bypass:**

---

**Type:** RP
**Size:** 1 1/4
**Manual:** 8
**Approved:** 11-Jan-2008
**Shutoffs:** (hhhh),rrrrr
**Manufacturer:** Watts
**Orientation:** H
**0.25% Pb:** Yes
**Renewed:** 11-Jan-2017
**Model:** LF009M2QT
**Meters:**
**Spare Parts Only:** No
**Bypass:**

---

**Type:** RP
**Size:** 1 1/2
**Manual:** 8
**Approved:** 11-Jan-2008
**Shutoffs:** (hhhh),rrrrr
**Manufacturer:** Watts
**Orientation:** H
**0.25% Pb:** Yes
**Renewed:** 11-Jan-2017
**Model:** LF009M2QT
**Meters:**
**Spare Parts Only:** No
**Bypass:**

---

**Type:** RP
**Size:** 2
**Manual:** 9
**Approved:** 11-Jan-2008
**Shutoffs:** (hhhh),rrrrr
**Manufacturer:** Watts
**Orientation:** H
**0.25% Pb:** Yes
**Renewed:** 11-Jan-2017
**Model:** LF009M2QT
**Meters:**
**Spare Parts Only:** No
**Bypass:**

---

**Type:** RP
**Size:** 3/4
**Manual:** 9
**Approved:** 13-Mar-2015
**Shutoffs:** (hhhh),rrrrr
**Manufacturer:** Watts
**Orientation:** H
**0.25% Pb:** Yes
**Renewed:** 13-Mar-2018
**Model:** LF009M3PCQT
**Meters:**
**Spare Parts Only:** No
**Bypass:**


2018 © University of Southern California

**Type:** RP
**Manufacturer:** Watts
**Model:** LF009M3QT
**Size:** 3/4
**Orientation:** H
**Meters:**
**Manual:** 9
**0.25% Pb:** Yes
**Spare Parts Only:** No
**Approved:** 11-Jan-2008
**Renewed:** 11-Jan-2017
**Bypass:**
**Shutoffs:** (hhhh),rrrrr

---

**Type:** RP
**Manufacturer:** Watts
**Model:** LF009PCQT
**Size:** 1/2
**Orientation:** H
**Meters:**
**Manual:** 9
**0.25% Pb:** Yes
**Spare Parts Only:** No
**Approved:** 13-Mar-2015
**Renewed:** 13-Mar-2018
**Bypass:**
**Shutoffs:** (hhhh),rrrrr

---

**Type:** RP
**Manufacturer:** Watts
**Model:** LF009QT
**Size:** 1/2
**Orientation:** H
**Meters:**
**Manual:** 9
**0.25% Pb:** Yes
**Spare Parts Only:** No
**Approved:** 11-Jan-2008
**Renewed:** 11-Jan-2017
**Bypass:**
**Shutoffs:** (hhhh),rrrrr

---

**Type:** RP
**Manufacturer:** Watts
**Model:** LF909
**Size:** 2 1/2
**Orientation:** H
**Meters:**
**Manual:** 9
**0.25% Pb:** Yes
**Spare Parts Only:** No
**Approved:** 12-Jan-2010
**Renewed:** 12-Jan-2016
**Bypass:**
**Shutoffs:** (ll),mm,oo,pp,zzz,cccc,dddd,eeee,ffff,gggg,nnnnn

---

**Type:** RP
**Manufacturer:** Watts
**Model:** LF909
**Size:** 3
**Orientation:** H
**Meters:**
**Manual:** 9
**0.25% Pb:** Yes
**Spare Parts Only:** No
**Approved:** 12-Jan-2010
**Renewed:** 12-Jan-2016
**Bypass:**
**Shutoffs:** (ll),mm,oo,pp,zzz,cccc,dddd,eeee,ffff,gggg,nnnnn

---

**Type:** RP
**Manufacturer:** Watts
**Model:** LF909
**Size:** 4
**Orientation:** H
**Meters:**
**Manual:** 9
**0.25% Pb:** Yes
**Spare Parts Only:** No
**Approved:** 27-Jul-2012
**Renewed:** 27-Jul-2018
**Bypass:**
**Shutoffs:** (ll),mm,oo,pp,zzz,cccc,dddd,eeee,ffff,gggg,nnnnn

---

**Type:** RP
**Manufacturer:** Watts
**Model:** LF909
**Size:** 6
**Orientation:** H
**Meters:**
**Manual:** 9
**0.25% Pb:** Yes
**Spare Parts Only:** No
**Approved:** 27-Jul-2012
**Renewed:** 27-Jul-2018
**Bypass:**
**Shutoffs:** (ll),mm,oo,pp,zzz,cccc,dddd,eeee,ffff,gggg,nnnnn

**Type:** RP
**Manufacturer:** Watts
**Model:** LF909M1
**Size:** 8
**Orientation:** H
**Meters:**
**Manual:** 9
**0.25% Pb:** Yes
**Spare Parts Only:** No
**Approved:** 01-Jul-2010
**Renewed:** 01-Jul-2016
**Bypass:**
**Shutoffs:** (ll),mm,oo,pp,zzz,cccc,dddd,eeee,ffff,gggg,nnnnn

---

**Type:** RP
**Manufacturer:** Watts
**Model:** LF909M1
**Size:** 10
**Orientation:** H
**Meters:**
**Manual:** 9
**0.25% Pb:** Yes
**Spare Parts Only:** No
**Approved:** 01-Jul-2010
**Renewed:** 01-Jul-2016
**Bypass:**
**Shutoffs:** (ll),mm,oo,pp,zzz,cccc,dddd,eeee,ffff,gggg,nnnnn

---

**Type:** RP
**Manufacturer:** Watts
**Model:** LF909M1PCQT
**Size:** 1 1/4
**Orientation:** H
**Meters:**
**Manual:** 9
**0.25% Pb:** No
**Spare Parts Only:** No
**Approved:** 13-Mar-2015
**Renewed:** 13-Mar-2018
**Bypass:**
**Shutoffs:** (hhhh),rrrrr

---

**Type:** RP
**Manufacturer:** Watts
**Model:** LF909M1PCQT
**Size:** 1 1/2
**Orientation:** H
**Meters:**
**Manual:** 9
**0.25% Pb:** No
**Spare Parts Only:** No
**Approved:** 13-Mar-2015
**Renewed:** 13-Mar-2018
**Bypass:**
**Shutoffs:** (hhhh),rrrrr

---

**Type:** RP
**Manufacturer:** Watts
**Model:** LF909M1PCQT
**Size:** 2
**Orientation:** H
**Meters:**
**Manual:** 9
**0.25% Pb:** No
**Spare Parts Only:** No
**Approved:** 13-Mar-2015
**Renewed:** 13-Mar-2018
**Bypass:**
**Shutoffs:** (hhhh),rrrrr

---

**Type:** RP
**Manufacturer:** Watts
**Model:** LF909M1QT
**Size:** 1 1/4
**Orientation:** H
**Meters:**
**Manual:** 9
**0.25% Pb:** Yes
**Spare Parts Only:** No
**Approved:** 18-Feb-2010
**Renewed:** 18-Feb-2016
**Bypass:**
**Shutoffs:** (hhhh),rrrrr

---

**Type:** RP
**Manufacturer:** Watts
**Model:** LF909M1QT
**Size:** 1 1/2
**Orientation:** H
**Meters:**
**Manual:** 9
**0.25% Pb:** Yes
**Spare Parts Only:** No
**Approved:** 18-Feb-2010
**Renewed:** 18-Feb-2016
**Bypass:**
**Shutoffs:** (hhhh),rrrrr


2018 © University of Southern California

**Type:** RP
**Size:** 2
**Manual:** 9
**Approved:** 18-Feb-2010
**Shutoffs:** (hhhh),rrrrr
**Manufacturer:** Watts
**Orientation:** H
**0.25% Pb:** Yes
**Renewed:** 18-Feb-2016
**Model:** LF909M1QT
**Meters:**
**Spare Parts Only:** No
**Bypass:**

---

**Type:** RP
**Size:** 3/4
**Manual:** 9
**Approved:** 13-Mar-2015
**Shutoffs:** (hhhh),rrrrr
**Manufacturer:** Watts
**Orientation:** H
**0.25% Pb:** No
**Renewed:** 13-Mar-2018
**Model:** LF909PCQT
**Meters:**
**Spare Parts Only:** No
**Bypass:**

---

**Type:** RP
**Size:** 3/4
**Manual:** 9
**Approved:** 13-Mar-2015
**Shutoffs:** (hhhh),rrrrr
**Manufacturer:** Watts
**Orientation:** VU
**0.25% Pb:** No
**Renewed:** 13-Mar-2018
**Model:** LF909PCQT
**Meters:**
**Spare Parts Only:** No
**Bypass:**

---

**Type:** RP
**Size:** 1
**Manual:** 9
**Approved:** 13-Mar-2015
**Shutoffs:** (hhhh),rrrrr
**Manufacturer:** Watts
**Orientation:** H
**0.25% Pb:** No
**Renewed:** 13-Mar-2018
**Model:** LF909PCQT
**Meters:**
**Spare Parts Only:** No
**Bypass:**

---

**Type:** RP
**Size:** 1
**Manual:** 9
**Approved:** 13-Mar-2015
**Shutoffs:** (hhhh),rrrrr
**Manufacturer:** Watts
**Orientation:** VU
**0.25% Pb:** No
**Renewed:** 13-Mar-2018
**Model:** LF909PCQT
**Meters:**
**Spare Parts Only:** No
**Bypass:**

---

**Type:** RP
**Size:** 3/4
**Manual:** 9
**Approved:** 18-Feb-2010
**Shutoffs:** (hhhh),rrrrr
**Manufacturer:** Watts
**Orientation:** H
**0.25% Pb:** Yes
**Renewed:** 18-Feb-2016
**Model:** LF909QT
**Meters:**
**Spare Parts Only:** No
**Bypass:**

---

**Type:** RP
**Size:** 3/4
**Manual:** 9
**Approved:** 15-Nov-2010
**Shutoffs:** (hhhh),rrrrr
**Manufacturer:** Watts
**Orientation:** VU
**0.25% Pb:** Yes
**Renewed:** 15-Nov-2016
**Model:** LF909QT
**Meters:**
**Spare Parts Only:** No
**Bypass:**

**Type:** RP
**Size:** 1
**Manual:** 9
**Approved:** 18-Feb-2010
**Shutoffs:** (hhhh),rrrrr
**Manufacturer:** Watts
**Orientation:** H
**0.25% Pb:** Yes
**Renewed:** 18-Feb-2016
**Model:** LF909QT
**Meters:**
**Spare Parts Only:** No
**Bypass:**

---

**Type:** RP
**Size:** 1
**Manual:** 9
**Approved:** 15-Nov-2010
**Shutoffs:** (hhhh),rrrrr
**Manufacturer:** Watts
**Orientation:** VU
**0.25% Pb:** Yes
**Renewed:** 15-Nov-2016
**Model:** LF909QT
**Meters:**
**Spare Parts Only:** No
**Bypass:**

---

**Type:** RP
**Size:** 3/4
**Manual:** 9
**Approved:** 14-Jun-2006
**Shutoffs:** (vv),xx,ooo,pppp,rrrrr
**Manufacturer:** Watts
**Orientation:** VUVD
**0.25% Pb:** No
**Renewed:** 14-Jun-2018
**Model:** LF919AQT
**Meters:**
**Spare Parts Only:** No
**Bypass:**

---

**Type:** RP
**Size:** 3/4
**Manual:** 9
**Approved:** 14-Jun-2006
**Shutoffs:** (hhhh),rrrrr
**Manufacturer:** Watts
**Orientation:** VUVD
**0.25% Pb:** Yes
**Renewed:** 14-Jun-2018
**Model:** LF919AQT
**Meters:**
**Spare Parts Only:** No
**Bypass:**

---

**Type:** RP
**Size:** 1
**Manual:** 9
**Approved:** 12-Apr-2006
**Shutoffs:** (vv),xx,ooo,pppp,rrrrr
**Manufacturer:** Watts
**Orientation:** VUVD
**0.25% Pb:** No
**Renewed:** 12-Apr-2018
**Model:** LF919AQT
**Meters:**
**Spare Parts Only:** No
**Bypass:**

---

**Type:** RP
**Size:** 1
**Manual:** 9
**Approved:** 12-Apr-2006
**Shutoffs:** (hhhh),rrrrr
**Manufacturer:** Watts
**Orientation:** VUVD
**0.25% Pb:** Yes
**Renewed:** 12-Apr-2018
**Model:** LF919AQT
**Meters:**
**Spare Parts Only:** No
**Bypass:**

---

**Type:** RP
**Size:** 1 1/4
**Manual:** 9
**Approved:** 05-Sep-2006
**Shutoffs:** (vv),xx,ooo,pppp,rrrrr
**Manufacturer:** Watts
**Orientation:** VUVD
**0.25% Pb:** No
**Renewed:** 05-Sep-2018
**Model:** LF919AQT
**Meters:**
**Spare Parts Only:** No
**Bypass:**


2018 © University of Southern California

**Type:** RP
**Size:** 1 1/4
**Manual:** 9
**Approved:** 05-Sep-2006
**Shutoffs:** (hhhh),rrrrr
**Manufacturer:** Watts
**Orientation:** VUVD
**0.25% Pb:** Yes
**Renewed:** 05-Sep-2018
**Model:** LF919AQT
**Meters:**
**Spare Parts Only:** No
**Bypass:**

---

**Type:** RP
**Size:** 1 1/2
**Manual:** 9
**Approved:** 12-Apr-2006
**Shutoffs:** (vv),xx,ooo,pppp,rrrrr
**Manufacturer:** Watts
**Orientation:** VUVD
**0.25% Pb:** No
**Renewed:** 12-Apr-2018
**Model:** LF919AQT
**Meters:**
**Spare Parts Only:** No
**Bypass:**

---

**Type:** RP
**Size:** 1 1/2
**Manual:** 9
**Approved:** 12-Apr-2006
**Shutoffs:** (hhhh),rrrrr
**Manufacturer:** Watts
**Orientation:** VUVD
**0.25% Pb:** Yes
**Renewed:** 12-Apr-2018
**Model:** LF919AQT
**Meters:**
**Spare Parts Only:** No
**Bypass:**

---

**Type:** RP
**Size:** 2
**Manual:** 9
**Approved:** 12-Apr-2006
**Shutoffs:** (vv),xx,ooo,pppp,rrrrr
**Manufacturer:** Watts
**Orientation:** VUVD
**0.25% Pb:** No
**Renewed:** 12-Apr-2018
**Model:** LF919AQT
**Meters:**
**Spare Parts Only:** No
**Bypass:**

---

**Type:** RP
**Size:** 2
**Manual:** 9
**Approved:** 12-Apr-2006
**Shutoffs:** (hhhh),rrrrr
**Manufacturer:** Watts
**Orientation:** VUVD
**0.25% Pb:** Yes
**Renewed:** 12-Apr-2018
**Model:** LF919AQT
**Meters:**
**Spare Parts Only:** No
**Bypass:**

---

**Type:** RP
**Size:** 3/4
**Manual:** 9
**Approved:** 14-Jun-2006
**Shutoffs:** (vv),xx,ooo,pppp,rrrrr
**Manufacturer:** Watts
**Orientation:** H
**0.25% Pb:** No
**Renewed:** 14-Jun-2018
**Model:** LF919QT
**Meters:**
**Spare Parts Only:** No
**Bypass:**

---

**Type:** RP
**Size:** 3/4
**Manual:** 9
**Approved:** 14-Jun-2006
**Shutoffs:** (hhhh),rrrrr
**Manufacturer:** Watts
**Orientation:** H
**0.25% Pb:** Yes
**Renewed:** 14-Jun-2018
**Model:** LF919QT
**Meters:**
**Spare Parts Only:** No
**Bypass:**

**Type:** RP
**Size:** 3/4
**Manual:** 9
**Approved:** 30-Aug-2006
**Shutoffs:** (vv),xx,ooo,pppp,rrrrr

**Manufacturer:** Watts
**Orientation:** VD
**0.25% Pb:** No
**Renewed:** 30-Aug-2018

**Model:** LF919QT
**Meters:**
**Spare Parts Only:** No
**Bypass:**

---

**Type:** RP
**Size:** 3/4
**Manual:** 9
**Approved:** 30-Aug-2006
**Shutoffs:** (hhhh),rrrrr

**Manufacturer:** Watts
**Orientation:** VD
**0.25% Pb:** Yes
**Renewed:** 30-Aug-2018

**Model:** LF919QT
**Meters:**
**Spare Parts Only:** No
**Bypass:**

---

**Type:** RP
**Size:** 1
**Manual:** 9
**Approved:** 12-Apr-2006
**Shutoffs:** (vv),xx,ooo,pppp,rrrrr

**Manufacturer:** Watts
**Orientation:** H
**0.25% Pb:** No
**Renewed:** 12-Apr-2018

**Model:** LF919QT
**Meters:**
**Spare Parts Only:** No
**Bypass:**

---

**Type:** RP
**Size:** 1
**Manual:** 9
**Approved:** 12-Apr-2006
**Shutoffs:** (hhhh),rrrrr

**Manufacturer:** Watts
**Orientation:** H
**0.25% Pb:** Yes
**Renewed:** 12-Apr-2018

**Model:** LF919QT
**Meters:**
**Spare Parts Only:** No
**Bypass:**

---

**Type:** RP
**Size:** 1
**Manual:** 9
**Approved:** 30-Aug-2006
**Shutoffs:** (vv),xx,ooo,pppp,rrrrr

**Manufacturer:** Watts
**Orientation:** VD
**0.25% Pb:** No
**Renewed:** 30-Aug-2018

**Model:** LF919QT
**Meters:**
**Spare Parts Only:** No
**Bypass:**

---

**Type:** RP
**Size:** 1
**Manual:** 9
**Approved:** 30-Aug-2006
**Shutoffs:** (hhhh),rrrrr

**Manufacturer:** Watts
**Orientation:** VD
**0.25% Pb:** Yes
**Renewed:** 30-Aug-2018

**Model:** LF919QT
**Meters:**
**Spare Parts Only:** No
**Bypass:**

---

**Type:** RP
**Size:** 1 1/4
**Manual:** 9
**Approved:** 12-Apr-2006
**Shutoffs:** (vv),xx,ooo,pppp,rrrrr

**Manufacturer:** Watts
**Orientation:** H
**0.25% Pb:** No
**Renewed:** 12-Apr-2018

**Model:** LF919QT
**Meters:**
**Spare Parts Only:** No
**Bypass:**


2018 © University of Southern California

**Type:** RP
**Size:** 1 1/4
**Manual:** 9
**Approved:** 12-Apr-2006
**Shutoffs:** (hhhh),rrrrr
**Manufacturer:** Watts
**Orientation:** H
**0.25% Pb:** Yes
**Renewed:** 12-Apr-2018
**Model:** LF919QT
**Meters:**
**Spare Parts Only:** No
**Bypass:**

---

**Type:** RP
**Size:** 1 1/4
**Manual:** 9
**Approved:** 30-Aug-2006
**Shutoffs:** (vv),xx,ooo,pppp,rrrrr
**Manufacturer:** Watts
**Orientation:** VD
**0.25% Pb:** No
**Renewed:** 30-Aug-2018
**Model:** LF919QT
**Meters:**
**Spare Parts Only:** No
**Bypass:**

---

**Type:** RP
**Size:** 1 1/4
**Manual:** 9
**Approved:** 30-Aug-2006
**Shutoffs:** (hhhh),rrrrr
**Manufacturer:** Watts
**Orientation:** VD
**0.25% Pb:** Yes
**Renewed:** 30-Aug-2018
**Model:** LF919QT
**Meters:**
**Spare Parts Only:** No
**Bypass:**

---

**Type:** RP
**Size:** 1 1/2
**Manual:** 9
**Approved:** 12-Apr-2006
**Shutoffs:** (vv),xx,ooo,pppp,rrrrr
**Manufacturer:** Watts
**Orientation:** H
**0.25% Pb:** No
**Renewed:** 12-Apr-2018
**Model:** LF919QT
**Meters:**
**Spare Parts Only:** No
**Bypass:**

---

**Type:** RP
**Size:** 1 1/2
**Manual:** 9
**Approved:** 12-Apr-2006
**Shutoffs:** (hhhh),rrrrr
**Manufacturer:** Watts
**Orientation:** H
**0.25% Pb:** Yes
**Renewed:** 12-Apr-2018
**Model:** LF919QT
**Meters:**
**Spare Parts Only:** No
**Bypass:**

---

**Type:** RP
**Size:** 1 1/2
**Manual:** 9
**Approved:** 30-Aug-2006
**Shutoffs:** (vv),xx,ooo,pppp,rrrrr
**Manufacturer:** Watts
**Orientation:** VD
**0.25% Pb:** No
**Renewed:** 30-Aug-2018
**Model:** LF919QT
**Meters:**
**Spare Parts Only:** No
**Bypass:**

---

**Type:** RP
**Size:** 1 1/2
**Manual:** 9
**Approved:** 30-Aug-2006
**Shutoffs:** (hhhh),rrrrr
**Manufacturer:** Watts
**Orientation:** VD
**0.25% Pb:** Yes
**Renewed:** 30-Aug-2018
**Model:** LF919QT
**Meters:**
**Spare Parts Only:** No
**Bypass:**

**Type:** RP
**Size:** 2
**Manual:** 9
**Approved:** 12-Apr-2006
**Shutoffs:** (vv),xx,ooo,pppp,rrrrr
**Manufacturer:** Watts
**Orientation:** H
**0.25% Pb:** No
**Renewed:** 12-Apr-2018
**Model:** LF919QT
**Meters:**
**Spare Parts Only:** No
**Bypass:**

---

**Type:** RP
**Size:** 2
**Manual:** 9
**Approved:** 12-Apr-2006
**Shutoffs:** (hhhh),rrrrr
**Manufacturer:** Watts
**Orientation:** H
**0.25% Pb:** Yes
**Renewed:** 12-Apr-2018
**Model:** LF919QT
**Meters:**
**Spare Parts Only:** No
**Bypass:**

---

**Type:** RP
**Size:** 2
**Manual:** 9
**Approved:** 30-Aug-2006
**Shutoffs:** (vv),xx,ooo,pppp,rrrrr
**Manufacturer:** Watts
**Orientation:** VD
**0.25% Pb:** No
**Renewed:** 30-Aug-2018
**Model:** LF919QT
**Meters:**
**Spare Parts Only:** No
**Bypass:**

---

**Type:** RP
**Size:** 2
**Manual:** 9
**Approved:** 30-Aug-2006
**Shutoffs:** (hhhh),rrrrr
**Manufacturer:** Watts
**Orientation:** VD
**0.25% Pb:** Yes
**Renewed:** 30-Aug-2018
**Model:** LF919QT
**Meters:**
**Spare Parts Only:** No
**Bypass:**

---

**Type:** RP
**Size:** 3/4
**Manual:** 9
**Approved:** 14-Jun-2006
**Shutoffs:** (vv),xx,ooo,hhhh,pppp,rrrrr
**Manufacturer:** Watts
**Orientation:** VUVU
**0.25% Pb:** No
**Renewed:** 14-Jun-2018
**Model:** LF919ZQT
**Meters:**
**Spare Parts Only:** No
**Bypass:**

---

**Type:** RP
**Size:** 1
**Manual:** 9
**Approved:** 12-Apr-2006
**Shutoffs:** (vv),xx,ooo,hhhh,pppp,rrrrr
**Manufacturer:** Watts
**Orientation:** VUVU
**0.25% Pb:** No
**Renewed:** 12-Apr-2018
**Model:** LF919ZQT
**Meters:**
**Spare Parts Only:** No
**Bypass:**

---

**Type:** RP
**Size:** 1 1/4
**Manual:** 9
**Approved:** 12-Apr-2006
**Shutoffs:** (vv),xx,ooo,hhhh,pppp,rrrrr
**Manufacturer:** Watts
**Orientation:** VUVU
**0.25% Pb:** No
**Renewed:** 12-Apr-2018
**Model:** LF919ZQT
**Meters:**
**Spare Parts Only:** No
**Bypass:**


2018 © University of Southern California

**Type:** RP
**Size:** 1 1/2
**Manual:** 9
**Approved:** 12-Apr-2006
**Shutoffs:** (vv),xx,ooo,hhhh,pppp,rrrrr
**Manufacturer:** Watts
**Orientation:** VUVU
**0.25% Pb:** No
**Renewed:** 12-Apr-2018
**Model:** LF919ZQT
**Meters:**
**Spare Parts Only:** No
**Bypass:**

---

**Type:** RP
**Size:** 2
**Manual:** 9
**Approved:** 12-Apr-2006
**Shutoffs:** (vv),xx,ooo,hhhh,pppp,rrrrr
**Manufacturer:** Watts
**Orientation:** VUVU
**0.25% Pb:** No
**Renewed:** 12-Apr-2018
**Model:** LF919ZQT
**Meters:**
**Spare Parts Only:** No
**Bypass:**

---

**Type:** RP
**Size:** 3/4
**Manual:** 9
**Approved:** 14-Jun-2006
**Shutoffs:** (vv),xx,ooo,pppp
**Manufacturer:** Watts
**Orientation:** VUVD
**0.25% Pb:** No
**Renewed:** 14-Jun-2018
**Model:** LFU919AQT
**Meters:**
**Spare Parts Only:** No
**Bypass:**

---

**Type:** RP
**Size:** 3/4
**Manual:** 9
**Approved:** 14-Jun-2006
**Shutoffs:** hhhh
**Manufacturer:** Watts
**Orientation:** VUVD
**0.25% Pb:** Yes
**Renewed:** 14-Jun-2018
**Model:** LFU919AQT
**Meters:**
**Spare Parts Only:** No
**Bypass:**

---

**Type:** RP
**Size:** 1
**Manual:** 9
**Approved:** 12-Apr-2006
**Shutoffs:** (vv),xx,ooo,pppp
**Manufacturer:** Watts
**Orientation:** VUVD
**0.25% Pb:** No
**Renewed:** 12-Apr-2018
**Model:** LFU919AQT
**Meters:**
**Spare Parts Only:** No
**Bypass:**

---

**Type:** RP
**Size:** 1
**Manual:** 9
**Approved:** 12-Apr-2006
**Shutoffs:** hhhh
**Manufacturer:** Watts
**Orientation:** VUVD
**0.25% Pb:** Yes
**Renewed:** 12-Apr-2018
**Model:** LFU919AQT
**Meters:**
**Spare Parts Only:** No
**Bypass:**

---

**Type:** RP
**Size:** 1 1/4
**Manual:** 9
**Approved:** 12-Apr-2006
**Shutoffs:** (vv),xx,ooo,pppp
**Manufacturer:** Watts
**Orientation:** VUVD
**0.25% Pb:** No
**Renewed:** 12-Apr-2018
**Model:** LFU919AQT
**Meters:**
**Spare Parts Only:** No
**Bypass:**

**Type:** RP
**Size:** 1 1/4
**Manual:** 9
**Approved:** 12-Apr-2006
**Shutoffs:** hhhh
**Manufacturer:** Watts
**Orientation:** VUVD
**0.25% Pb:** Yes
**Renewed:** 12-Apr-2018
**Model:** LFU919AQT
**Meters:**
**Spare Parts Only:** No
**Bypass:**

---

**Type:** RP
**Size:** 1 1/2
**Manual:** 9
**Approved:** 12-Apr-2006
**Shutoffs:** (vv),xx,ooo,pppp
**Manufacturer:** Watts
**Orientation:** VUVD
**0.25% Pb:** No
**Renewed:** 12-Apr-2018
**Model:** LFU919AQT
**Meters:**
**Spare Parts Only:** No
**Bypass:**

---

**Type:** RP
**Size:** 1 1/2
**Manual:** 9
**Approved:** 12-Apr-2006
**Shutoffs:** hhhh
**Manufacturer:** Watts
**Orientation:** VUVD
**0.25% Pb:** Yes
**Renewed:** 12-Apr-2018
**Model:** LFU919AQT
**Meters:**
**Spare Parts Only:** No
**Bypass:**

---

**Type:** RP
**Size:** 2
**Manual:** 9
**Approved:** 12-Apr-2006
**Shutoffs:** (vv),xx,ooo,pppp
**Manufacturer:** Watts
**Orientation:** VUVD
**0.25% Pb:** No
**Renewed:** 12-Apr-2018
**Model:** LFU919AQT
**Meters:**
**Spare Parts Only:** No
**Bypass:**

---

**Type:** RP
**Size:** 2
**Manual:** 9
**Approved:** 12-Apr-2006
**Shutoffs:** hhhh
**Manufacturer:** Watts
**Orientation:** VUVD
**0.25% Pb:** Yes
**Renewed:** 12-Apr-2018
**Model:** LFU919AQT
**Meters:**
**Spare Parts Only:** No
**Bypass:**

---

**Type:** RP
**Size:** 1
**Manual:** 9
**Approved:** 12-Apr-2006
**Shutoffs:** (vv),xx,ooo,pppp
**Manufacturer:** Watts
**Orientation:** H
**0.25% Pb:** No
**Renewed:** 12-Apr-2018
**Model:** LFU919QT
**Meters:**
**Spare Parts Only:** No
**Bypass:**

---

**Type:** RP
**Size:** 1
**Manual:** 9
**Approved:** 12-Apr-2006
**Shutoffs:** hhhh
**Manufacturer:** Watts
**Orientation:** H
**0.25% Pb:** Yes
**Renewed:** 12-Apr-2018
**Model:** LFU919QT
**Meters:**
**Spare Parts Only:** No
**Bypass:**


2018 © University of Southern California

**Type:** RP
**Size:** 1
**Manual:** 9
**Approved:** 30-Aug-2006
**Shutoffs:** (vv),xx,ooo,pppp
**Manufacturer:** Watts
**Orientation:** VD
**0.25% Pb:** No
**Renewed:** 30-Aug-2018
**Model:** LFU919QT
**Meters:**
**Spare Parts Only:** No
**Bypass:**

---

**Type:** RP
**Size:** 1
**Manual:** 9
**Approved:** 30-Aug-2006
**Shutoffs:** hhhh
**Manufacturer:** Watts
**Orientation:** VD
**0.25% Pb:** Yes
**Renewed:** 30-Aug-2018
**Model:** LFU919QT
**Meters:**
**Spare Parts Only:** No
**Bypass:**

---

**Type:** RP
**Size:** 1 1/4
**Manual:** 9
**Approved:** 12-Apr-2006
**Shutoffs:** (vv),xx,ooo,pppp
**Manufacturer:** Watts
**Orientation:** H
**0.25% Pb:** No
**Renewed:** 12-Apr-2018
**Model:** LFU919QT
**Meters:**
**Spare Parts Only:** No
**Bypass:**

---

**Type:** RP
**Size:** 1 1/4
**Manual:** 9
**Approved:** 12-Apr-2006
**Shutoffs:** hhhh
**Manufacturer:** Watts
**Orientation:** H
**0.25% Pb:** Yes
**Renewed:** 12-Apr-2018
**Model:** LFU919QT
**Meters:**
**Spare Parts Only:** No
**Bypass:**

---

**Type:** RP
**Size:** 1 1/4
**Manual:** 9
**Approved:** 30-Aug-2006
**Shutoffs:** (vv),xx,ooo,pppp
**Manufacturer:** Watts
**Orientation:** VD
**0.25% Pb:** No
**Renewed:** 30-Aug-2018
**Model:** LFU919QT
**Meters:**
**Spare Parts Only:** No
**Bypass:**

---

**Type:** RP
**Size:** 1 1/4
**Manual:** 9
**Approved:** 30-Aug-2006
**Shutoffs:** hhhh
**Manufacturer:** Watts
**Orientation:** VD
**0.25% Pb:** Yes
**Renewed:** 30-Aug-2018
**Model:** LFU919QT
**Meters:**
**Spare Parts Only:** No
**Bypass:**

---

**Type:** RP
**Size:** 1 1/2
**Manual:** 9
**Approved:** 12-Apr-2006
**Shutoffs:** (vv),xx,ooo,pppp
**Manufacturer:** Watts
**Orientation:** H
**0.25% Pb:** No
**Renewed:** 12-Apr-2018
**Model:** LFU919QT
**Meters:**
**Spare Parts Only:** No
**Bypass:**

**Type:** RP
**Size:** 1 1/2
**Manual:** 9
**Approved:** 12-Apr-2006
**Shutoffs:** hhhh
**Manufacturer:** Watts
**Orientation:** H
**0.25% Pb:** Yes
**Renewed:** 12-Apr-2018
**Model:** LFU919QT
**Meters:**
**Spare Parts Only:** No
**Bypass:**

---

**Type:** RP
**Size:** 1 1/2
**Manual:** 9
**Approved:** 30-Aug-2006
**Shutoffs:** (vv),xx,ooo,pppp
**Manufacturer:** Watts
**Orientation:** VD
**0.25% Pb:** No
**Renewed:** 30-Aug-2018
**Model:** LFU919QT
**Meters:**
**Spare Parts Only:** No
**Bypass:**

---

**Type:** RP
**Size:** 1 1/2
**Manual:** 9
**Approved:** 30-Aug-2006
**Shutoffs:** hhhh
**Manufacturer:** Watts
**Orientation:** VD
**0.25% Pb:** Yes
**Renewed:** 30-Aug-2018
**Model:** LFU919QT
**Meters:**
**Spare Parts Only:** No
**Bypass:**

---

**Type:** RP
**Size:** 2
**Manual:** 9
**Approved:** 12-Apr-2006
**Shutoffs:** (vv),xx,ooo,pppp
**Manufacturer:** Watts
**Orientation:** H
**0.25% Pb:** No
**Renewed:** 12-Apr-2018
**Model:** LFU919QT
**Meters:**
**Spare Parts Only:** No
**Bypass:**

---

**Type:** RP
**Size:** 2
**Manual:** 9
**Approved:** 12-Apr-2006
**Shutoffs:** hhhh
**Manufacturer:** Watts
**Orientation:** H
**0.25% Pb:** Yes
**Renewed:** 12-Apr-2018
**Model:** LFU919QT
**Meters:**
**Spare Parts Only:** No
**Bypass:**

---

**Type:** RP
**Size:** 2
**Manual:** 9
**Approved:** 30-Aug-2006
**Shutoffs:** (vv),xx,ooo,pppp
**Manufacturer:** Watts
**Orientation:** VD
**0.25% Pb:** No
**Renewed:** 30-Aug-2018
**Model:** LFU919QT
**Meters:**
**Spare Parts Only:** No
**Bypass:**

---

**Type:** RP
**Size:** 2
**Manual:** 9
**Approved:** 30-Aug-2006
**Shutoffs:** hhhh
**Manufacturer:** Watts
**Orientation:** VD
**0.25% Pb:** Yes
**Renewed:** 30-Aug-2018
**Model:** LFU919QT
**Meters:**
**Spare Parts Only:** No
**Bypass:**


2018 © University of Southern California

**Type:** RP
**Size:** 1/4
**Manual:** 9
**Approved:** 19-Dec-2001
**Shutoffs:** (hhh)
**Manufacturer:** Watts
**Orientation:** H
**0.25% Pb:** Yes
**Renewed:** 19-Dec-2016
**Model:** SS009M3QT
**Meters:**
**Spare Parts Only:** No
**Bypass:**

---

**Type:** RP
**Size:** 3/8
**Manual:** 9
**Approved:** 19-Dec-2001
**Shutoffs:** (hhh)
**Manufacturer:** Watts
**Orientation:** H
**0.25% Pb:** Yes
**Renewed:** 19-Dec-2016
**Model:** SS009M3QT
**Meters:**
**Spare Parts Only:** No
**Bypass:**

---

**Type:** RP
**Size:** 1/2
**Manual:** 9
**Approved:** 19-Dec-2001
**Shutoffs:** (hhh)
**Manufacturer:** Watts
**Orientation:** H
**0.25% Pb:** Yes
**Renewed:** 19-Dec-2016
**Model:** SS009M3QT
**Meters:**
**Spare Parts Only:** No
**Bypass:**

---

**Type:** RP
**Size:** 3/4
**Manual:** 9
**Approved:** 31-Jul-2001
**Shutoffs:** (hhh)
**Manufacturer:** Watts
**Orientation:** H
**0.25% Pb:** Yes
**Renewed:** 31-Jul-2016
**Model:** SS009M3QT
**Meters:**
**Spare Parts Only:** No
**Bypass:**

---

**Type:** RP
**Size:** 1
**Manual:**
**Approved:** 18-May-1998
**Shutoffs:** (hhh)
**Manufacturer:** Watts
**Orientation:** H
**0.25% Pb:** No
**Renewed:** 18-May-2016
**Model:** SS009QT
**Meters:**
**Spare Parts Only:** No
**Bypass:**

---

**Type:** RP
**Size:** 3/4
**Manual:** 8
**Approved:** 10-Dec-1993
**Shutoffs:** (vv),xx,ooo,hhhh,pppp
**Manufacturer:** Watts
**Orientation:** VDVD
**0.25% Pb:** No
**Renewed:** 10-Dec-2017
**Model:** U009APCQT
**Meters:**
**Spare Parts Only:** No
**Bypass:**

---

**Type:** RP
**Size:** 3/4
**Manual:** 8
**Approved:** 10-Dec-1993
**Shutoffs:** (vv),xx,ooo,hhhh,pppp
**Manufacturer:** Watts
**Orientation:** VDVU
**0.25% Pb:** No
**Renewed:** 10-Dec-2017
**Model:** U009APCQT
**Meters:**
**Spare Parts Only:** No
**Bypass:**

**Type:** RP
**Size:** 3/4
**Manual:** 8
**Approved:** 10-Dec-1993
**Shutoffs:** (vv),xx,ooo,hhhh,pppp
**Manufacturer:** Watts
**Orientation:** VUVD
**0.25% Pb:** No
**Renewed:** 10-Dec-2017
**Model:** U009APCQT
**Meters:**
**Spare Parts Only:** No
**Bypass:**

---

**Type:** RP
**Size:** 3/4
**Manual:** 8
**Approved:** 10-Dec-1993
**Shutoffs:** (vv),xx,ooo,hhhh,pppp
**Manufacturer:** Watts
**Orientation:** VUVU
**0.25% Pb:** No
**Renewed:** 10-Dec-2017
**Model:** U009APCQT
**Meters:**
**Spare Parts Only:** No
**Bypass:**

---

**Type:** RP
**Size:** 1
**Manual:** 8
**Approved:** 10-Dec-1993
**Shutoffs:** vv,xx,ooo,hhhh,pppp
**Manufacturer:** Watts
**Orientation:** VDVD
**0.25% Pb:** No
**Renewed:** 10-Dec-2017
**Model:** U009APCQT
**Meters:**
**Spare Parts Only:** Yes
**Bypass:**

---

**Type:** RP
**Size:** 1
**Manual:** 8
**Approved:** 10-Dec-1993
**Shutoffs:** vv,xx,ooo,hhhh,pppp
**Manufacturer:** Watts
**Orientation:** VDVU
**0.25% Pb:** No
**Renewed:** 10-Dec-2017
**Model:** U009APCQT
**Meters:**
**Spare Parts Only:** Yes
**Bypass:**

---

**Type:** RP
**Size:** 1
**Manual:** 8
**Approved:** 10-Dec-1993
**Shutoffs:** vv,xx,ooo,hhhh,pppp
**Manufacturer:** Watts
**Orientation:** VUVD
**0.25% Pb:** No
**Renewed:** 10-Dec-2017
**Model:** U009APCQT
**Meters:**
**Spare Parts Only:** Yes
**Bypass:**

---

**Type:** RP
**Size:** 1
**Manual:** 8
**Approved:** 10-Dec-1993
**Shutoffs:** vv,xx,ooo,hhhh,pppp
**Manufacturer:** Watts
**Orientation:** VUVU
**0.25% Pb:** No
**Renewed:** 10-Dec-2017
**Model:** U009APCQT
**Meters:**
**Spare Parts Only:** Yes
**Bypass:**

---

**Type:** RP
**Size:** 3/4
**Manual:** 8
**Approved:** 12-Jun-1992
**Shutoffs:** (vv),xx,ooo,hhhh,pppp
**Manufacturer:** Watts
**Orientation:** VDVD
**0.25% Pb:** No
**Renewed:** 12-Jun-2016
**Model:** U009AQT
**Meters:**
**Spare Parts Only:** No
**Bypass:**


2018 © University of Southern California

**Type:** RP
**Size:** 3/4
**Manual:** 8
**Approved:** 12-Jun-1992
**Shutoffs:** (vv),xx,ooo,hhhh,pppp
**Manufacturer:** Watts
**Orientation:** VDVU
**0.25% Pb:** No
**Renewed:** 12-Jun-2016
**Model:** U009AQT
**Meters:**
**Spare Parts Only:** No
**Bypass:**

---

**Type:** RP
**Size:** 3/4
**Manual:** 8
**Approved:** 12-Jun-1992
**Shutoffs:** (vv),xx,ooo,hhhh,pppp
**Manufacturer:** Watts
**Orientation:** VUVD
**0.25% Pb:** No
**Renewed:** 12-Jun-2016
**Model:** U009AQT
**Meters:**
**Spare Parts Only:** No
**Bypass:**

---

**Type:** RP
**Size:** 3/4
**Manual:** 8
**Approved:** 12-Jun-1992
**Shutoffs:** (vv),xx,ooo,hhhh,pppp
**Manufacturer:** Watts
**Orientation:** VUVU
**0.25% Pb:** No
**Renewed:** 12-Jun-2016
**Model:** U009AQT
**Meters:**
**Spare Parts Only:** No
**Bypass:**

---

**Type:** RP
**Size:** 1
**Manual:** 8
**Approved:** 12-Jun-1992
**Shutoffs:** vv,xx,ooo,hhhh,pppp
**Manufacturer:** Watts
**Orientation:** VDVD
**0.25% Pb:** No
**Renewed:** 12-Jun-2016
**Model:** U009AQT
**Meters:**
**Spare Parts Only:** Yes
**Bypass:**

---

**Type:** RP
**Size:** 1
**Manual:** 8
**Approved:** 12-Jun-1992
**Shutoffs:** vv,xx,ooo,hhhh,pppp
**Manufacturer:** Watts
**Orientation:** VDVU
**0.25% Pb:** No
**Renewed:** 12-Jun-2016
**Model:** U009AQT
**Meters:**
**Spare Parts Only:** Yes
**Bypass:**

---

**Type:** RP
**Size:** 1
**Manual:** 8
**Approved:** 12-Jun-1992
**Shutoffs:** vv,xx,ooo,hhhh,pppp
**Manufacturer:** Watts
**Orientation:** VUVD
**0.25% Pb:** No
**Renewed:** 12-Jun-2016
**Model:** U009AQT
**Meters:**
**Spare Parts Only:** Yes
**Bypass:**

---

**Type:** RP
**Size:** 1
**Manual:** 8
**Approved:** 12-Jun-1992
**Shutoffs:** vv,xx,ooo,hhhh,pppp
**Manufacturer:** Watts
**Orientation:** VUVU
**0.25% Pb:** No
**Renewed:** 12-Jun-2016
**Model:** U009AQT
**Meters:**
**Spare Parts Only:** Yes
**Bypass:**

**Type:** RP
**Size:** 1 1/2
**Manual:** 8
**Approved:** 27-Sep-1994
**Shutoffs:** vv,xx,ooo,hhhh,pppp
**Manufacturer:** Watts
**Orientation:** VDVD
**0.25% Pb:** No
**Renewed:** 27-Sep-2018
**Model:** U009M1APCQT
**Meters:**
**Spare Parts Only:** Yes
**Bypass:**

---

**Type:** RP
**Size:** 1 1/2
**Manual:** 8
**Approved:** 27-Sep-1994
**Shutoffs:** vv,xx,ooo,hhhh,pppp
**Manufacturer:** Watts
**Orientation:** VDVU
**0.25% Pb:** No
**Renewed:** 27-Sep-2018
**Model:** U009M1APCQT
**Meters:**
**Spare Parts Only:** Yes
**Bypass:**

---

**Type:** RP
**Size:** 1 1/2
**Manual:** 8
**Approved:** 27-Sep-1994
**Shutoffs:** vv,xx,ooo,hhhh,pppp
**Manufacturer:** Watts
**Orientation:** VUVD
**0.25% Pb:** No
**Renewed:** 27-Sep-2018
**Model:** U009M1APCQT
**Meters:**
**Spare Parts Only:** Yes
**Bypass:**

---

**Type:** RP
**Size:** 1 1/2
**Manual:** 8
**Approved:** 27-Sep-1994
**Shutoffs:** vv,xx,ooo,hhhh,pppp
**Manufacturer:** Watts
**Orientation:** VUVU
**0.25% Pb:** No
**Renewed:** 27-Sep-2018
**Model:** U009M1APCQT
**Meters:**
**Spare Parts Only:** Yes
**Bypass:**

---

**Type:** RP
**Size:** 2
**Manual:** 8
**Approved:** 27-Sep-1994
**Shutoffs:** vv,xx,ooo,hhhh,pppp
**Manufacturer:** Watts
**Orientation:** VDVD
**0.25% Pb:** No
**Renewed:** 27-Sep-2018
**Model:** U009M1APCQT
**Meters:**
**Spare Parts Only:** Yes
**Bypass:**

---

**Type:** RP
**Size:** 2
**Manual:** 8
**Approved:** 27-Sep-1994
**Shutoffs:** vv,xx,ooo,hhhh,pppp
**Manufacturer:** Watts
**Orientation:** VDVU
**0.25% Pb:** No
**Renewed:** 27-Sep-2018
**Model:** U009M1APCQT
**Meters:**
**Spare Parts Only:** Yes
**Bypass:**

---

**Type:** RP
**Size:** 2
**Manual:** 8
**Approved:** 27-Sep-1994
**Shutoffs:** vv,xx,ooo,hhhh,pppp
**Manufacturer:** Watts
**Orientation:** VUVD
**0.25% Pb:** No
**Renewed:** 27-Sep-2018
**Model:** U009M1APCQT
**Meters:**
**Spare Parts Only:** Yes
**Bypass:**


2018 © University of Southern California

**Type:** RP
**Size:** 2
**Manual:** 8
**Approved:** 27-Sep-1994
**Shutoffs:** vv,xx,ooo,hhhh,pppp
**Manufacturer:** Watts
**Orientation:** VUVU
**0.25% Pb:** No
**Renewed:** 27-Sep-2018
**Model:** U009M1APCQT
**Meters:**
**Spare Parts Only:** Yes
**Bypass:**

---

**Type:** RP
**Size:** 1 1/2
**Manual:** 8
**Approved:** 16-Dec-1992
**Shutoffs:** vv,xx,ooo,hhhh,pppp
**Manufacturer:** Watts
**Orientation:** VDVD
**0.25% Pb:** No
**Renewed:** 16-Dec-2016
**Model:** U009M1AQT
**Meters:**
**Spare Parts Only:** Yes
**Bypass:**

---

**Type:** RP
**Size:** 1 1/2
**Manual:** 8
**Approved:** 16-Dec-1992
**Shutoffs:** vv,xx,ooo,hhhh,pppp
**Manufacturer:** Watts
**Orientation:** VDVU
**0.25% Pb:** No
**Renewed:** 16-Dec-2016
**Model:** U009M1AQT
**Meters:**
**Spare Parts Only:** Yes
**Bypass:**

---

**Type:** RP
**Size:** 1 1/2
**Manual:** 8
**Approved:** 16-Dec-1992
**Shutoffs:** vv,xx,ooo,hhhh,pppp
**Manufacturer:** Watts
**Orientation:** VUVD
**0.25% Pb:** No
**Renewed:** 16-Dec-2016
**Model:** U009M1AQT
**Meters:**
**Spare Parts Only:** Yes
**Bypass:**

---

**Type:** RP
**Size:** 1 1/2
**Manual:** 8
**Approved:** 16-Dec-1992
**Shutoffs:** vv,xx,ooo,hhhh,pppp
**Manufacturer:** Watts
**Orientation:** VUVU
**0.25% Pb:** No
**Renewed:** 16-Dec-2016
**Model:** U009M1AQT
**Meters:**
**Spare Parts Only:** Yes
**Bypass:**

---

**Type:** RP
**Size:** 2
**Manual:** 8
**Approved:** 09-Nov-1992
**Shutoffs:** vv,xx,ooo,hhhh,pppp
**Manufacturer:** Watts
**Orientation:** VDVD
**0.25% Pb:** No
**Renewed:** 09-Nov-2016
**Model:** U009M1AQT
**Meters:**
**Spare Parts Only:** Yes
**Bypass:**

---

**Type:** RP
**Size:** 2
**Manual:** 8
**Approved:** 09-Nov-1992
**Shutoffs:** vv,xx,ooo,hhhh,pppp
**Manufacturer:** Watts
**Orientation:** VDVU
**0.25% Pb:** No
**Renewed:** 09-Nov-2016
**Model:** U009M1AQT
**Meters:**
**Spare Parts Only:** Yes
**Bypass:**

**Type:** RP
**Size:** 2
**Manual:** 8
**Approved:** 09-Nov-1992
**Shutoffs:** vv,xx,ooo,hhhh,pppp
**Manufacturer:** Watts
**Orientation:** VUVD
**0.25% Pb:** No
**Renewed:** 09-Nov-2016
**Model:** U009M1AQT
**Meters:**
**Spare Parts Only:** Yes
**Bypass:**

---

**Type:** RP
**Size:** 2
**Manual:** 8
**Approved:** 09-Nov-1992
**Shutoffs:** vv,xx,ooo,hhhh,pppp
**Manufacturer:** Watts
**Orientation:** VUVU
**0.25% Pb:** No
**Renewed:** 09-Nov-2016
**Model:** U009M1AQT
**Meters:**
**Spare Parts Only:** Yes
**Bypass:**

---

**Type:** RP
**Size:** 1 1/4
**Manual:** 8
**Approved:** 27-Sep-1994
**Shutoffs:** (vv),xx,ooo,hhhh,pppp
**Manufacturer:** Watts
**Orientation:** H
**0.25% Pb:** No
**Renewed:** 27-Sep-2018
**Model:** U009M1PCQT
**Meters:**
**Spare Parts Only:** No
**Bypass:**

---

**Type:** RP
**Size:** 1 1/2
**Manual:** 8
**Approved:** 27-Sep-1994
**Shutoffs:** (vv),xx,ooo,hhhh,pppp
**Manufacturer:** Watts
**Orientation:** H
**0.25% Pb:** No
**Renewed:** 27-Sep-2018
**Model:** U009M1PCQT
**Meters:**
**Spare Parts Only:** No
**Bypass:**

---

**Type:** RP
**Size:** 2
**Manual:** 8
**Approved:** 27-Sep-1994
**Shutoffs:** (vv),xx,ooo,hhhh,pppp
**Manufacturer:** Watts
**Orientation:** H
**0.25% Pb:** No
**Renewed:** 27-Sep-2018
**Model:** U009M1PCQT
**Meters:**
**Spare Parts Only:** No
**Bypass:**

---

**Type:** RP
**Size:** 1 1/4
**Manual:** 8
**Approved:** 30-Jun-1992
**Shutoffs:** (vv),xx,ooo,hhhh,pppp
**Manufacturer:** Watts
**Orientation:** H
**0.25% Pb:** No
**Renewed:** 30-Jun-2016
**Model:** U009M1QT
**Meters:**
**Spare Parts Only:** No
**Bypass:**

---

**Type:** RP
**Size:** 1 1/2
**Manual:** 8
**Approved:** 30-Jun-1992
**Shutoffs:** vv,xx,ooo,hhhh,pppp
**Manufacturer:** Watts
**Orientation:** H
**0.25% Pb:** No
**Renewed:** 30-Jun-2016
**Model:** U009M1QT
**Meters:**
**Spare Parts Only:** Yes
**Bypass:**


2018 © University of Southern California

**Type:** RP
**Size:** 2
**Manual:** 8
**Approved:** 30-Jun-1992
**Shutoffs:** vv,xx,ooo,hhhh,pppp
**Manufacturer:** Watts
**Orientation:** H
**0.25% Pb:** No
**Renewed:** 30-Jun-2016
**Model:** U009M1QT
**Meters:**
**Spare Parts Only:** Yes
**Bypass:**

---

**Type:** RP
**Size:** 1
**Manual:** 9
**Approved:** 15-Jan-1999
**Shutoffs:** (vv),xx,ooo,hhhh,pppp
**Manufacturer:** Watts
**Orientation:** VDVD
**0.25% Pb:** No
**Renewed:** 15-Jan-2017
**Model:** U009M2APCQT
**Meters:**
**Spare Parts Only:** No
**Bypass:**

---

**Type:** RP
**Size:** 1
**Manual:** 9
**Approved:** 15-Jan-1999
**Shutoffs:** (vv),xx,ooo,hhhh,pppp
**Manufacturer:** Watts
**Orientation:** VDVU
**0.25% Pb:** No
**Renewed:** 15-Jan-2017
**Model:** U009M2APCQT
**Meters:**
**Spare Parts Only:** No
**Bypass:**

---

**Type:** RP
**Size:** 1
**Manual:** 9
**Approved:** 15-Jan-1999
**Shutoffs:** (vv),xx,ooo,hhhh,pppp
**Manufacturer:** Watts
**Orientation:** VUVD
**0.25% Pb:** No
**Renewed:** 15-Jan-2017
**Model:** U009M2APCQT
**Meters:**
**Spare Parts Only:** No
**Bypass:**

---

**Type:** RP
**Size:** 1
**Manual:** 9
**Approved:** 15-Jan-1999
**Shutoffs:** (vv),xx,ooo,hhhh,pppp
**Manufacturer:** Watts
**Orientation:** VUVU
**0.25% Pb:** No
**Renewed:** 15-Jan-2017
**Model:** U009M2APCQT
**Meters:**
**Spare Parts Only:** No
**Bypass:**

---

**Type:** RP
**Size:** 1 1/2
**Manual:** 8
**Approved:** 12-Sep-1994
**Shutoffs:** (vv),xx,ooo,hhhh,pppp
**Manufacturer:** Watts
**Orientation:** VDVD
**0.25% Pb:** No
**Renewed:** 12-Sep-2018
**Model:** U009M2APCQT
**Meters:**
**Spare Parts Only:** No
**Bypass:**

---

**Type:** RP
**Size:** 1 1/2
**Manual:** 8
**Approved:** 12-Sep-1994
**Shutoffs:** (vv),xx,ooo,hhhh,pppp
**Manufacturer:** Watts
**Orientation:** VDVU
**0.25% Pb:** No
**Renewed:** 12-Sep-2018
**Model:** U009M2APCQT
**Meters:**
**Spare Parts Only:** No
**Bypass:**

**Type:** RP
**Size:** 1 1/2
**Manual:** 8
**Approved:** 12-Sep-1994
**Shutoffs:** (vv),xx,ooo,hhhh,pppp
**Manufacturer:** Watts
**Orientation:** VUVD
**0.25% Pb:** No
**Renewed:** 12-Sep-2018
**Model:** U009M2APCQT
**Meters:**
**Spare Parts Only:** No
**Bypass:**

---

**Type:** RP
**Size:** 1 1/2
**Manual:** 8
**Approved:** 12-Sep-1994
**Shutoffs:** (vv),xx,ooo,hhhh,pppp
**Manufacturer:** Watts
**Orientation:** VUVU
**0.25% Pb:** No
**Renewed:** 12-Sep-2018
**Model:** U009M2APCQT
**Meters:**
**Spare Parts Only:** No
**Bypass:**

---

**Type:** RP
**Size:** 2
**Manual:** 9
**Approved:** 26-Aug-1997
**Shutoffs:** (vv),xx,ooo,hhhh,pppp
**Manufacturer:** Watts
**Orientation:** VDVD
**0.25% Pb:** No
**Renewed:** 26-Aug-2018
**Model:** U009M2APCQT
**Meters:**
**Spare Parts Only:** No
**Bypass:**

---

**Type:** RP
**Size:** 2
**Manual:** 9
**Approved:** 26-Aug-1997
**Shutoffs:** (vv),xx,ooo,hhhh,pppp
**Manufacturer:** Watts
**Orientation:** VDVU
**0.25% Pb:** No
**Renewed:** 26-Aug-2018
**Model:** U009M2APCQT
**Meters:**
**Spare Parts Only:** No
**Bypass:**

---

**Type:** RP
**Size:** 2
**Manual:** 9
**Approved:** 26-Aug-1997
**Shutoffs:** (vv),xx,ooo,hhhh,pppp
**Manufacturer:** Watts
**Orientation:** VUVD
**0.25% Pb:** No
**Renewed:** 26-Aug-2018
**Model:** U009M2APCQT
**Meters:**
**Spare Parts Only:** No
**Bypass:**

---

**Type:** RP
**Size:** 2
**Manual:** 9
**Approved:** 26-Aug-1997
**Shutoffs:** (vv),xx,ooo,hhhh,pppp
**Manufacturer:** Watts
**Orientation:** VUVU
**0.25% Pb:** No
**Renewed:** 26-Aug-2018
**Model:** U009M2APCQT
**Meters:**
**Spare Parts Only:** No
**Bypass:**

---

**Type:** RP
**Size:** 1
**Manual:** 9
**Approved:** 15-Jan-1999
**Shutoffs:** (vv),xx,ooo,hhhh,pppp
**Manufacturer:** Watts
**Orientation:** VDVD
**0.25% Pb:** No
**Renewed:** 15-Jan-2017
**Model:** U009M2AQT
**Meters:**
**Spare Parts Only:** No
**Bypass:**


2018 © University of Southern California

**Type:** RP
**Size:** 1
**Manual:** 9
**Approved:** 15-Jan-1999
**Shutoffs:** (vv),xx,ooo,hhhh,pppp
**Manufacturer:** Watts
**Orientation:** VDVU
**0.25% Pb:** No
**Renewed:** 15-Jan-2017
**Model:** U009M2AQT
**Meters:**
**Spare Parts Only:** No
**Bypass:**

---

**Type:** RP
**Size:** 1
**Manual:** 9
**Approved:** 15-Jan-1999
**Shutoffs:** (vv),xx,ooo,hhhh,pppp
**Manufacturer:** Watts
**Orientation:** VUVD
**0.25% Pb:** No
**Renewed:** 15-Jan-2017
**Model:** U009M2AQT
**Meters:**
**Spare Parts Only:** No
**Bypass:**

---

**Type:** RP
**Size:** 1
**Manual:** 9
**Approved:** 15-Jan-1999
**Shutoffs:** (vv),xx,ooo,hhhh,pppp
**Manufacturer:** Watts
**Orientation:** VUVU
**0.25% Pb:** No
**Renewed:** 15-Jan-2017
**Model:** U009M2AQT
**Meters:**
**Spare Parts Only:** No
**Bypass:**

---

**Type:** RP
**Size:** 1 1/2
**Manual:** 8
**Approved:** 24-Aug-1993
**Shutoffs:** (vv),xx,ooo,hhhh,pppp
**Manufacturer:** Watts
**Orientation:** VDVD
**0.25% Pb:** No
**Renewed:** 24-Aug-2017
**Model:** U009M2AQT
**Meters:**
**Spare Parts Only:** No
**Bypass:**

---

**Type:** RP
**Size:** 1 1/2
**Manual:** 8
**Approved:** 24-Aug-1993
**Shutoffs:** (vv),xx,ooo,hhhh,pppp
**Manufacturer:** Watts
**Orientation:** VDVU
**0.25% Pb:** No
**Renewed:** 24-Aug-2017
**Model:** U009M2AQT
**Meters:**
**Spare Parts Only:** No
**Bypass:**

---

**Type:** RP
**Size:** 1 1/2
**Manual:** 8
**Approved:** 24-Aug-1993
**Shutoffs:** (vv),xx,ooo,hhhh,pppp
**Manufacturer:** Watts
**Orientation:** VUVD
**0.25% Pb:** No
**Renewed:** 24-Aug-2017
**Model:** U009M2AQT
**Meters:**
**Spare Parts Only:** No
**Bypass:**

---

**Type:** RP
**Size:** 1 1/2
**Manual:** 8
**Approved:** 24-Aug-1993
**Shutoffs:** (vv),xx,ooo,hhhh,pppp
**Manufacturer:** Watts
**Orientation:** VUVU
**0.25% Pb:** No
**Renewed:** 24-Aug-2017
**Model:** U009M2AQT
**Meters:**
**Spare Parts Only:** No
**Bypass:**

**Type:** RP
**Size:** 2
**Manual:** 9
**Approved:** 26-Aug-1997
**Shutoffs:** (vv),xx,ooo,hhhh,pppp
**Manufacturer:** Watts
**Orientation:** VDVD
**0.25% Pb:** No
**Renewed:** 26-Aug-2018
**Model:** U009M2AQT
**Meters:**
**Spare Parts Only:** No
**Bypass:**

---

**Type:** RP
**Size:** 2
**Manual:** 9
**Approved:** 26-Aug-1997
**Shutoffs:** (vv),xx,ooo,hhhh,pppp
**Manufacturer:** Watts
**Orientation:** VDVU
**0.25% Pb:** No
**Renewed:** 26-Aug-2018
**Model:** U009M2AQT
**Meters:**
**Spare Parts Only:** No
**Bypass:**

---

**Type:** RP
**Size:** 2
**Manual:** 9
**Approved:** 26-Aug-1997
**Shutoffs:** (vv),xx,ooo,hhhh,pppp
**Manufacturer:** Watts
**Orientation:** VUVD
**0.25% Pb:** No
**Renewed:** 26-Aug-2018
**Model:** U009M2AQT
**Meters:**
**Spare Parts Only:** No
**Bypass:**

---

**Type:** RP
**Size:** 2
**Manual:** 9
**Approved:** 26-Aug-1997
**Shutoffs:** (vv),xx,ooo,hhhh,pppp
**Manufacturer:** Watts
**Orientation:** VUVU
**0.25% Pb:** No
**Renewed:** 26-Aug-2018
**Model:** U009M2AQT
**Meters:**
**Spare Parts Only:** No
**Bypass:**

---

**Type:** RP
**Size:** 1
**Manual:** 9
**Approved:** 15-Jan-1999
**Shutoffs:** (vv),xx,ooo,hhhh,pppp
**Manufacturer:** Watts
**Orientation:** H
**0.25% Pb:** No
**Renewed:** 15-Jan-2017
**Model:** U009M2PCQT
**Meters:**
**Spare Parts Only:** No
**Bypass:**

---

**Type:** RP
**Size:** 1 1/2
**Manual:** 8
**Approved:** 12-Sep-1994
**Shutoffs:** (vv),xx,ooo,hhhh,pppp
**Manufacturer:** Watts
**Orientation:** H
**0.25% Pb:** No
**Renewed:** 12-Sep-2018
**Model:** U009M2PCQT
**Meters:**
**Spare Parts Only:** No
**Bypass:**

---

**Type:** RP
**Size:** 2
**Manual:** 9
**Approved:** 26-Aug-1997
**Shutoffs:** (vv),xx,ooo,hhhh,pppp
**Manufacturer:** Watts
**Orientation:** H
**0.25% Pb:** No
**Renewed:** 26-Aug-2018
**Model:** U009M2PCQT
**Meters:**
**Spare Parts Only:** No
**Bypass:**


2018 © University of Southern California

**Type:** RP
**Size:** 3/4
**Manual:** 8
**Approved:** 16-Nov-1992
**Shutoffs:** (vv),xx,ooo,hhhh,pppp
**Manufacturer:** Watts
**Orientation:** H
**0.25% Pb:** No
**Renewed:** 16-Nov-2016
**Model:** U009M2QT
**Meters:**
**Spare Parts Only:** No
**Bypass:**

---

**Type:** RP
**Size:** 1
**Manual:** 9
**Approved:** 15-Jan-1999
**Shutoffs:** (vv),xx,ooo,hhhh,pppp
**Manufacturer:** Watts
**Orientation:** H
**0.25% Pb:** No
**Renewed:** 15-Jan-2017
**Model:** U009M2QT
**Meters:**
**Spare Parts Only:** No
**Bypass:**

---

**Type:** RP
**Size:** 1 1/2
**Manual:** 8
**Approved:** 24-Aug-1993
**Shutoffs:** (vv),xx,ooo,hhhh,pppp
**Manufacturer:** Watts
**Orientation:** H
**0.25% Pb:** No
**Renewed:** 24-Aug-2017
**Model:** U009M2QT
**Meters:**
**Spare Parts Only:** No
**Bypass:**

---

**Type:** RP
**Size:** 2
**Manual:** 9
**Approved:** 26-Aug-1997
**Shutoffs:** (vv),xx,ooo,hhhh,pppp
**Manufacturer:** Watts
**Orientation:** H
**0.25% Pb:** No
**Renewed:** 26-Aug-2018
**Model:** U009M2QT
**Meters:**
**Spare Parts Only:** No
**Bypass:**

---

**Type:** RP
**Size:** 1/2
**Manual:** 8
**Approved:** 02-Feb-1995
**Shutoffs:** (vv),xx,ooo,hhhh,pppp
**Manufacturer:** Watts
**Orientation:** H
**0.25% Pb:** No
**Renewed:** 02-Feb-2016
**Model:** U009PCQT
**Meters:**
**Spare Parts Only:** No
**Bypass:**

---

**Type:** RP
**Size:** 3/4
**Manual:** 8
**Approved:** 10-Dec-1993
**Shutoffs:** (vv),xx,ooo,hhhh,pppp
**Manufacturer:** Watts
**Orientation:** H
**0.25% Pb:** No
**Renewed:** 10-Dec-2017
**Model:** U009PCQT
**Meters:**
**Spare Parts Only:** No
**Bypass:**

---

**Type:** RP
**Size:** 1
**Manual:** 8
**Approved:** 10-Dec-1993
**Shutoffs:** vv,xx,ooo,hhhh,pppp
**Manufacturer:** Watts
**Orientation:** H
**0.25% Pb:** No
**Renewed:** 10-Dec-2017
**Model:** U009PCQT
**Meters:**
**Spare Parts Only:** Yes
**Bypass:**

**Type:** RP
**Size:** 1 1/4
**Manual:** 8
**Approved:** 27-Sep-1994
**Shutoffs:** vv,xx,ooo,hhhh,pppp
**Manufacturer:** Watts
**Orientation:** H
**0.25% Pb:** No
**Renewed:** 27-Sep-2018
**Model:** U009PCQT
**Meters:**
**Spare Parts Only:** Yes
**Bypass:**

---

**Type:** RP
**Size:** 1 1/2
**Manual:** 8
**Approved:** 27-Sep-1994
**Shutoffs:** vv,xx,ooo,hhhh,pppp
**Manufacturer:** Watts
**Orientation:** H
**0.25% Pb:** No
**Renewed:** 27-Sep-2018
**Model:** U009PCQT
**Meters:**
**Spare Parts Only:** Yes
**Bypass:**

---

**Type:** RP
**Size:** 2
**Manual:** 8
**Approved:** 27-Sep-1994
**Shutoffs:** vv,xx,ooo,hhhh,pppp
**Manufacturer:** Watts
**Orientation:** H
**0.25% Pb:** No
**Renewed:** 27-Sep-2018
**Model:** U009PCQT
**Meters:**
**Spare Parts Only:** Yes
**Bypass:**

---

**Type:** RP
**Size:** 1/2
**Manual:** 8
**Approved:** 02-Feb-1995
**Shutoffs:** (vv),xx,ooo,hhhh,pppp
**Manufacturer:** Watts
**Orientation:** H
**0.25% Pb:** No
**Renewed:** 02-Feb-2016
**Model:** U009QT
**Meters:**
**Spare Parts Only:** No
**Bypass:**

---

**Type:** RP
**Size:** 3/4
**Manual:** 7
**Approved:** 11-Jan-1988
**Shutoffs:** vv,xx,ooo,hhhh,pppp
**Manufacturer:** Watts
**Orientation:** H
**0.25% Pb:** No
**Renewed:** 11-Jan-2018
**Model:** U009QT
**Meters:**
**Spare Parts Only:** Yes
**Bypass:**

---

**Type:** RP
**Size:** 1
**Manual:** 7
**Approved:** 11-Jan-1988
**Shutoffs:** vv,xx,ooo,hhhh,pppp
**Manufacturer:** Watts
**Orientation:** H
**0.25% Pb:** No
**Renewed:** 11-Jan-2018
**Model:** U009QT
**Meters:**
**Spare Parts Only:** Yes
**Bypass:**

---

**Type:** RP
**Size:** 1 1/4
**Manual:** 7
**Approved:** 09-Aug-1988
**Shutoffs:** vv,xx,ooo,hhhh,pppp
**Manufacturer:** Watts
**Orientation:** H
**0.25% Pb:** No
**Renewed:** 09-Aug-2018
**Model:** U009QT
**Meters:**
**Spare Parts Only:** Yes
**Bypass:**


2018 © University of Southern California

**Type:** RP
**Size:** 1 1/2
**Manual:** 7
**Approved:** 09-Aug-1988
**Shutoffs:** vv,xx,ooo,hhhh,pppp
**Manufacturer:** Watts
**Orientation:** H
**0.25% Pb:** No
**Renewed:** 09-Aug-2018
**Model:** U009QT
**Meters:**
**Spare Parts Only:** Yes
**Bypass:**

---

**Type:** RP
**Size:** 2
**Manual:** 7
**Approved:** 09-Aug-1988
**Shutoffs:** vv,xx,ooo,hhhh,pppp
**Manufacturer:** Watts
**Orientation:** H
**0.25% Pb:** No
**Renewed:** 09-Aug-2018
**Model:** U009QT
**Meters:**
**Spare Parts Only:** Yes
**Bypass:**

---

**Type:** RP
**Size:** 3/4
**Manual:** 8
**Approved:** 10-Dec-1993
**Shutoffs:** vv,xx,pppp
**Manufacturer:** Watts
**Orientation:** H
**0.25% Pb:** No
**Renewed:** 10-Dec-2017
**Model:** U009SSPCQT
**Meters:**
**Spare Parts Only:** Yes
**Bypass:**

---

**Type:** RP
**Size:** 1
**Manual:** 8
**Approved:** 10-Dec-1993
**Shutoffs:** vv,xx,pppp
**Manufacturer:** Watts
**Orientation:** H
**0.25% Pb:** No
**Renewed:** 10-Dec-2017
**Model:** U009SSPCQT
**Meters:**
**Spare Parts Only:** Yes
**Bypass:**

---

**Type:** RP
**Size:** 1 1/4
**Manual:** 8
**Approved:** 27-Sep-1994
**Shutoffs:** vv,xx,pppp
**Manufacturer:** Watts
**Orientation:** H
**0.25% Pb:** No
**Renewed:** 27-Sep-2018
**Model:** U009SSPCQT
**Meters:**
**Spare Parts Only:** Yes
**Bypass:**

---

**Type:** RP
**Size:** 1 1/2
**Manual:** 8
**Approved:** 27-Sep-1994
**Shutoffs:** vv,xx,pppp
**Manufacturer:** Watts
**Orientation:** H
**0.25% Pb:** No
**Renewed:** 27-Sep-2018
**Model:** U009SSPCQT
**Meters:**
**Spare Parts Only:** Yes
**Bypass:**

---

**Type:** RP
**Size:** 2
**Manual:** 8
**Approved:** 27-Sep-1994
**Shutoffs:** vv,xx,pppp
**Manufacturer:** Watts
**Orientation:** H
**0.25% Pb:** No
**Renewed:** 27-Sep-2018
**Model:** U009SSPCQT
**Meters:**
**Spare Parts Only:** Yes
**Bypass:**

**Type:** RP
**Size:** 3/4
**Manual:** 7
**Approved:** 11-Jan-1988
**Shutoffs:** vv,xx,pppp

**Manufacturer:** Watts
**Orientation:** H
**0.25% Pb:** No
**Renewed:** 11-Jan-2018

**Model:** U009SSQT
**Meters:**
**Spare Parts Only:** Yes
**Bypass:**

---

**Type:** RP
**Size:** 1
**Manual:** 7
**Approved:** 11-Jan-1988
**Shutoffs:** vv,xx,pppp

**Manufacturer:** Watts
**Orientation:** H
**0.25% Pb:** No
**Renewed:** 11-Jan-2018

**Model:** U009SSQT
**Meters:**
**Spare Parts Only:** Yes
**Bypass:**

---

**Type:** RP
**Size:** 1 1/4
**Manual:** 7
**Approved:** 09-Aug-1988
**Shutoffs:** vv,xx,pppp

**Manufacturer:** Watts
**Orientation:** H
**0.25% Pb:** No
**Renewed:** 09-Aug-2018

**Model:** U009SSQT
**Meters:**
**Spare Parts Only:** Yes
**Bypass:**

---

**Type:** RP
**Size:** 1 1/2
**Manual:** 7
**Approved:** 09-Aug-1988
**Shutoffs:** vv,xx,pppp

**Manufacturer:** Watts
**Orientation:** H
**0.25% Pb:** No
**Renewed:** 09-Aug-2018

**Model:** U009SSQT
**Meters:**
**Spare Parts Only:** Yes
**Bypass:**

---

**Type:** RP
**Size:** 2
**Manual:** 7
**Approved:** 09-Aug-1988
**Shutoffs:** vv,xx,pppp

**Manufacturer:** Watts
**Orientation:** H
**0.25% Pb:** No
**Renewed:** 09-Aug-2018

**Model:** U009SSQT
**Meters:**
**Spare Parts Only:** Yes
**Bypass:**

---

**Type:** RP
**Size:** 3/4
**Manual:** 5
**Approved:** 29-Sep-1979
**Shutoffs:** (vv),xx,ooo,hhhh,pppp

**Manufacturer:** Watts
**Orientation:** H
**0.25% Pb:** No
**Renewed:** 29-Sep-2018

**Model:** U909HWQT
**Meters:**
**Spare Parts Only:** Yes
**Bypass:**

---

**Type:** RP
**Size:** 1
**Manual:** 5
**Approved:** 29-Sep-1979
**Shutoffs:** (vv),xx,ooo,hhhh,pppp

**Manufacturer:** Watts
**Orientation:** H
**0.25% Pb:** No
**Renewed:** 29-Sep-2018

**Model:** U909HWQT
**Meters:**
**Spare Parts Only:** Yes
**Bypass:**


2018 © University of Southern California

**Type:** RP
**Manufacturer:** Watts
**Model:** U909QT
**Size:** 3/4
**Orientation:** H
**Meters:**
**Manual:** 9
**0.25% Pb:** No
**Spare Parts Only:** Yes
**Approved:** 09-Oct-1998
**Renewed:** 09-Oct-2016
**Bypass:**
**Shutoffs:** (vv),xx,ooo,hhhh,pppp
**Notes:** Approved 6th Ed. (15 Jan 1982), 9th Ed. Approval for S/N 464100 and higher

---

**Type:** RP
**Manufacturer:** Watts
**Model:** U909QT
**Size:** 3/4
**Orientation:** VU
**Meters:**
**Manual:** 9
**0.25% Pb:** No
**Spare Parts Only:** Yes
**Approved:** 09-Oct-1998
**Renewed:** 09-Oct-2016
**Bypass:**
**Shutoffs:** (vv),xx,ooo,hhhh,pppp
**Notes:** S/N 464100 and greater

---

**Type:** RP
**Manufacturer:** Watts
**Model:** U909QT
**Size:** 1
**Orientation:** H
**Meters:**
**Manual:** 9
**0.25% Pb:** No
**Spare Parts Only:** Yes
**Approved:** 09-Oct-1998
**Renewed:** 09-Oct-2016
**Bypass:**
**Shutoffs:** (vv),xx,ooo,hhhh,pppp
**Notes:** Approved 6th Ed. (15 Jan 1982), 9th Ed. Approval for S/N 464100 and higher

---

**Type:** RP
**Manufacturer:** Watts
**Model:** U909QT
**Size:** 1
**Orientation:** VU
**Meters:**
**Manual:** 9
**0.25% Pb:** No
**Spare Parts Only:** Yes
**Approved:** 09-Oct-1998
**Renewed:** 09-Oct-2016
**Bypass:**
**Shutoffs:** (vv),xx,ooo,hhhh,pppp
**Notes:** S/N 464100 and greater

---

**Type:** RP
**Manufacturer:** Watts
**Model:** U919AQT
**Size:** 3/4
**Orientation:** VUVD
**Meters:**
**Manual:** 9
**0.25% Pb:** No
**Spare Parts Only:** No
**Approved:** 14-Jun-2006
**Renewed:** 14-Jun-2018
**Bypass:**
**Shutoffs:** (vv),xx,ooo,hhhh,pppp

---

**Type:** RP
**Manufacturer:** Watts
**Model:** U919AQT
**Size:** 1
**Orientation:** VUVD
**Meters:**
**Manual:** 9
**0.25% Pb:** No
**Spare Parts Only:** No
**Approved:** 01-Jun-2006
**Renewed:** 01-Jun-2018
**Bypass:**
**Shutoffs:** (vv),xx,ooo,hhhh,pppp

**Type:** RP
**Size:** 1 1/4
**Manual:** 9
**Approved:** 01-Jun-2006
**Shutoffs:** (vv),xx,ooo,hhhh,pppp
**Manufacturer:** Watts
**Orientation:** VUVD
**0.25% Pb:** No
**Renewed:** 01-Jun-2018
**Model:** U919AQT
**Meters:**
**Spare Parts Only:** No
**Bypass:**

---

**Type:** RP
**Size:** 1 1/2
**Manual:** 9
**Approved:** 01-Jun-2006
**Shutoffs:** (vv),xx,ooo,hhhh,pppp
**Manufacturer:** Watts
**Orientation:** VUVD
**0.25% Pb:** No
**Renewed:** 01-Jun-2018
**Model:** U919AQT
**Meters:**
**Spare Parts Only:** No
**Bypass:**

---

**Type:** RP
**Size:** 2
**Manual:** 9
**Approved:** 01-Jun-2006
**Shutoffs:** (vv),xx,ooo,hhhh,pppp
**Manufacturer:** Watts
**Orientation:** VUVD
**0.25% Pb:** No
**Renewed:** 01-Jun-2018
**Model:** U919AQT
**Meters:**
**Spare Parts Only:** No
**Bypass:**

---

**Type:** RP
**Size:** 1
**Manual:** 9
**Approved:** 01-Jun-2006
**Shutoffs:** (vv),xx,ooo,hhhh,pppp
**Manufacturer:** Watts
**Orientation:** H
**0.25% Pb:** No
**Renewed:** 01-Jun-2018
**Model:** U919QT
**Meters:**
**Spare Parts Only:** No
**Bypass:**

---

**Type:** RP
**Size:** 1
**Manual:** 9
**Approved:** 30-Aug-2006
**Shutoffs:** (vv),xx,ooo,hhhh,pppp
**Manufacturer:** Watts
**Orientation:** VD
**0.25% Pb:** No
**Renewed:** 30-Aug-2018
**Model:** U919QT
**Meters:**
**Spare Parts Only:** No
**Bypass:**

---

**Type:** RP
**Size:** 1 1/4
**Manual:** 9
**Approved:** 01-Jun-2006
**Shutoffs:** (vv),xx,ooo,hhhh,pppp
**Manufacturer:** Watts
**Orientation:** H
**0.25% Pb:** No
**Renewed:** 01-Jun-2018
**Model:** U919QT
**Meters:**
**Spare Parts Only:** No
**Bypass:**

---

**Type:** RP
**Size:** 1 1/4
**Manual:** 9
**Approved:** 30-Aug-2006
**Shutoffs:** (vv),xx,ooo,hhhh,pppp
**Manufacturer:** Watts
**Orientation:** VD
**0.25% Pb:** No
**Renewed:** 30-Aug-2018
**Model:** U919QT
**Meters:**
**Spare Parts Only:** No
**Bypass:**


2018 © University of Southern California

**Type:** RP
**Manufacturer:** Watts
**Model:** U919QT
**Size:** 1 1/2
**Orientation:** H
**Meters:**
**Manual:** 9
**0.25% Pb:** No
**Spare Parts Only:** No
**Approved:** 01-Jun-2006
**Renewed:** 01-Jun-2018
**Bypass:**
**Shutoffs:** (vv),xx,ooo,hhhh,pppp

---

**Type:** RP
**Manufacturer:** Watts
**Model:** U919QT
**Size:** 1 1/2
**Orientation:** VD
**Meters:**
**Manual:** 9
**0.25% Pb:** No
**Spare Parts Only:** No
**Approved:** 30-Aug-2006
**Renewed:** 30-Aug-2018
**Bypass:**
**Shutoffs:** (vv),xx,ooo,hhhh,pppp

---

**Type:** RP
**Manufacturer:** Watts
**Model:** U919QT
**Size:** 2
**Orientation:** H
**Meters:**
**Manual:** 9
**0.25% Pb:** No
**Spare Parts Only:** No
**Approved:** 01-Jun-2006
**Renewed:** 01-Jun-2018
**Bypass:**
**Shutoffs:** (vv),xx,ooo,hhhh,pppp

---

**Type:** RP
**Manufacturer:** Watts
**Model:** U919QT
**Size:** 2
**Orientation:** VD
**Meters:**
**Manual:** 9
**0.25% Pb:** No
**Spare Parts Only:** No
**Approved:** 30-Aug-2006
**Renewed:** 30-Aug-2018
**Bypass:**
**Shutoffs:** (vv),xx,ooo,hhhh,pppp

---

**Type:** RP
**Manufacturer:** Wilkins
**Model:** 375
**Size:** 1/2
**Orientation:** H
**Meters:**
**Manual:** 9
**0.25% Pb:** No
**Spare Parts Only:** No
**Approved:** 06-Apr-2011
**Renewed:** 06-Apr-2017
**Bypass:**
**Shutoffs:** (int)
**Notes:** Testcocks: Female Threaded End or 45 degree male SAE flare

---

**Type:** RP
**Manufacturer:** Wilkins
**Model:** 375
**Size:** 3/4
**Orientation:** H
**Meters:**
**Manual:** 9
**0.25% Pb:** No
**Spare Parts Only:** No
**Approved:** 09-Mar-2007
**Renewed:** 09-Mar-2016
**Bypass:**
**Shutoffs:** (int)
**Notes:** Testcocks: Female Threaded End or 45 degree male SAE flare

**Type:** RP
**Manufacturer:** Wilkins
**Model:** 375
**Size:** 1
**Orientation:** H
**Meters:**
**Manual:** 9
**0.25% Pb:** No
**Spare Parts Only:** No
**Approved:** 09-Mar-2007
**Renewed:** 09-Mar-2016
**Bypass:**
**Shutoffs:** (int)
**Notes:** Testcocks: Female Threaded End or 45 degree male SAE flare

---

**Type:** RP
**Manufacturer:** Wilkins
**Model:** 375
**Size:** 1 1/4
**Orientation:** H
**Meters:**
**Manual:** 9
**0.25% Pb:** No
**Spare Parts Only:** No
**Approved:** 20-Apr-2010
**Renewed:** 20-Apr-2016
**Bypass:**
**Shutoffs:** (int)

---

**Type:** RP
**Manufacturer:** Wilkins
**Model:** 375
**Size:** 1 1/2
**Orientation:** H
**Meters:**
**Manual:** 9
**0.25% Pb:** No
**Spare Parts Only:** No
**Approved:** 20-Apr-2010
**Renewed:** 20-Apr-2016
**Bypass:**
**Shutoffs:** (int)

---

**Type:** RP
**Manufacturer:** Wilkins
**Model:** 375
**Size:** 2
**Orientation:** H
**Meters:**
**Manual:** 9
**0.25% Pb:** No
**Spare Parts Only:** No
**Approved:** 20-Apr-2010
**Renewed:** 20-Apr-2016
**Bypass:**
**Shutoffs:** (int)

---

**Type:** RP
**Manufacturer:** Wilkins
**Model:** 375
**Size:** 2 1/2
**Orientation:** H
**Meters:**
**Manual:** 9
**0.25% Pb:** No
**Spare Parts Only:** No
**Approved:** 28-Sep-2001
**Renewed:** 28-Sep-2016
**Bypass:**
**Shutoffs:**
(gg),ee,ff,hh,ll,mm,tt,uu,yy,zz,ppp,qqq,zzz,dddd,ssss,tttt,vvvv,wwww,yyyy,zzzz,kkkkk,gggggg,hhhhhh,jjjjjj,kkkkkk,mmmmmm,nnnnnn
**Notes:** Up to serial number L61205

---

**Type:** RP
**Manufacturer:** Wilkins
**Model:** 375
**Size:** 2 1/2
**Orientation:** H
**Meters:**
**Manual:** 9
**0.25% Pb:** Yes
**Spare Parts Only:** No
**Approved:** 09-Sep-2010
**Renewed:** 09-Sep-2016
**Bypass:**
**Shutoffs:** (gg),hh,ppp,qqq,ssss,tttt,vvvv,wwww,yyyy,zzzz,kkkkk,gggggg,hhhhhh,jjjjjj,kkkkkk,mmmmmm,nnnnnn
**Notes:** Serial number L61205 and higher


2018 © University of Southern California

**Type:** RP **Manufacturer:** Wilkins **Model:** 375
**Size:** 3 **Orientation:** H **Meters:**
**Manual:** 9 **0.25% Pb:** No **Spare Parts Only:** No
**Approved:** 28-Sep-2001 **Renewed:** 28-Sep-2016 **Bypass:**
**Shutoffs:**
(gg),ee,ff,hh,ll,mm,tt,uu,yy,zz,ppp,qqq,zzz,dddd,ssss,tttt,vvvv,wwww,yyyy,zzzz,kkkkk,gggggg,hhhhhh,jjjjjj,kkkkkk,mmmmmm,nnnnnn
**Notes:** Up to serial number L61205

---

**Type:** RP **Manufacturer:** Wilkins **Model:** 375
**Size:** 3 **Orientation:** H **Meters:**
**Manual:** 9 **0.25% Pb:** Yes **Spare Parts Only:** No
**Approved:** 09-Sep-2010 **Renewed:** 09-Sep-2016 **Bypass:**
**Shutoffs:** (gg),hh,ppp,qqq,ssss,tttt,vvvv,wwww,yyyy,zzzz,kkkkk,gggggg,hhhhhh,jjjjjj,kkkkkk,mmmmmm,nnnnnn
**Notes:** Serial number L61205 and higher

---

**Type:** RP **Manufacturer:** Wilkins **Model:** 375
**Size:** 4 **Orientation:** H **Meters:**
**Manual:** 9 **0.25% Pb:** No **Spare Parts Only:** No
**Approved:** 27-Mar-2000 **Renewed:** 27-Mar-2018 **Bypass:**
**Shutoffs:**
(gg),ee,ff,hh,ll,mm,tt,uu,yy,zz,ppp,qqq,vvv,www,zzz,dddd,eeee,ssss,tttt,vvvv,wwww,yyyy,zzzz,kkkkk,gggggg,hhhhhh,jjjjjj,kkkkkk,mmmmmm,nnnnnn
**Notes:** Up to serial number L61205

---

**Type:** RP **Manufacturer:** Wilkins **Model:** 375
**Size:** 4 **Orientation:** H **Meters:**
**Manual:** 9 **0.25% Pb:** Yes **Spare Parts Only:** No
**Approved:** 09-Sep-2010 **Renewed:** 09-Sep-2016 **Bypass:**
**Shutoffs:** (gg),hh,ppp,qqq,vvv,www,ssss,tttt,vvvv,wwww,yyyy,zzzz,kkkkk,gggggg,hhhhhh,jjjjjj,kkkkkk,mmmmmm,nnnnnn
**Notes:** Serial number L61205 and higher

---

**Type:** RP **Manufacturer:** Wilkins **Model:** 375
**Size:** 6 **Orientation:** H **Meters:**
**Manual:** 9 **0.25% Pb:** No **Spare Parts Only:** No
**Approved:** 27-Jul-2000 **Renewed:** 27-Jul-2018 **Bypass:**
**Shutoffs:**
(gg),ee,ff,hh,ll,mm,tt,uu,yy,zz,ppp,qqq,vvv,www,zzz,dddd,eeee,ssss,tttt,vvvv,wwww,yyyy,zzzz,kkkkk,gggggg,hhhhhh,jjjjjj,kkkkkk,mmmmmm,nnnnnn
**Notes:** Up to serial number L61205

**Type:** RP **Manufacturer:** Wilkins **Model:** 375
**Size:** 6 **Orientation:** H **Meters:**
**Manual:** 9 **0.25% Pb:** Yes **Spare Parts Only:** No
**Approved:** 09-Sep-2010 **Renewed:** 09-Sep-2016 **Bypass:**
**Shutoffs:** (gg),hh,ppp,qqq,vvv,www,ssss,tttt,vvvv,wwww,yyyy,zzzz,kkkkk,gggggg,hhhhhh,jjjjjj,kkkkkk,mmmmmm,nnnnnn
**Notes:** Serial number L61205 and higher

---

**Type:** RP **Manufacturer:** Wilkins **Model:** 375
**Size:** 8 **Orientation:** H **Meters:**
**Manual:** 9 **0.25% Pb:** No **Spare Parts Only:** No
**Approved:** 11-Nov-2002 **Renewed:** 11-Nov-2017 **Bypass:**
**Shutoffs:**
(gg),ee,ff,hh,ll,mm,tt,uu,yy,zz,ppp,qqq,vvv,www,zzz,dddd,eeee,ssss,tttt,vvvv,wwww,yyyy,zzzz,kkkkk,gggggg,hhhhhh,jjjjjj,kkkkkk,mmmmmm,nnnnnn
**Notes:** Up to serial number L61205

---

**Type:** RP **Manufacturer:** Wilkins **Model:** 375
**Size:** 8 **Orientation:** H **Meters:**
**Manual:** 9 **0.25% Pb:** Yes **Spare Parts Only:** No
**Approved:** 09-Sep-2010 **Renewed:** 09-Sep-2016 **Bypass:**
**Shutoffs:** (gg),hh,ppp,qqq,vvv,www,ssss,tttt,vvvv,wwww,yyyy,zzzz,kkkkk,gggggg,hhhhhh,jjjjjj,kkkkkk,mmmmmm,nnnnnn
**Notes:** Serial number L61205 and higher

---

**Type:** RP **Manufacturer:** Wilkins **Model:** 375
**Size:** 10 **Orientation:** H **Meters:**
**Manual:** 9 **0.25% Pb:** No **Spare Parts Only:** No
**Approved:** 22-Nov-2004 **Renewed:** 22-Nov-2016 **Bypass:**
**Shutoffs:**
(gg),ee,ff,hh,ll,mm,tt,uu,yy,zz,ppp,qqq,vvv,www,zzz,dddd,eeee,ssss,tttt,vvvv,wwww,yyyy,zzzz,kkkkk,gggggg,hhhhhh,jjjjjj,kkkkkk,mmmmmm,nnnnnn
**Notes:** Up to serial number L61205

---

**Type:** RP **Manufacturer:** Wilkins **Model:** 375
**Size:** 10 **Orientation:** H **Meters:**
**Manual:** 9 **0.25% Pb:** Yes **Spare Parts Only:** No
**Approved:** 09-Sep-2010 **Renewed:** 09-Sep-2016 **Bypass:**
**Shutoffs:** (gg),hh,ppp,qqq,vvv,www,ssss,tttt,vvvv,wwww,yyyy,zzzz,kkkkk,gggggg,hhhhhh,jjjjjj,kkkkkk,mmmmmm,nnnnnn
**Notes:** Serial number L61205 and higher


2018 © University of Southern California

**Type:** RP **Manufacturer:** Wilkins **Model:** 375A
**Size:** 2 1/2 **Orientation:** H **Meters:**
**Manual:** 9 **0.25% Pb:** No **Spare Parts Only:** No
**Approved:** 20-Oct-2008 **Renewed:** 20-Oct-2017 **Bypass:**
**Shutoffs:**
(ppp),qqq,sss,ttt,yyy,zzz,dddd,ssss,uuuu,vvvv,xxxx,yyyy,aaaaa,kkkkk,lllll,gggggg,iiiiii,jjjjjj,llllll,mmmmmm,oooooo
**Notes:** Up to serial number X18805

---

**Type:** RP **Manufacturer:** Wilkins **Model:** 375A
**Size:** 2 1/2 **Orientation:** H **Meters:**
**Manual:** 9 **0.25% Pb:** Yes **Spare Parts Only:** No
**Approved:** 09-Sep-2010 **Renewed:** 09-Sep-2016 **Bypass:**
**Shutoffs:** (ppp),qqq,sss,ttt,yyy,ssss,uuuu,vvvv,xxxx,yyyy,aaaaa,kkkkk,lllll,gggggg,iiiiii,jjjjjj,llllll,mmmmmm,oooooo
**Notes:** Serial number X18805 and higher

---

**Type:** RP **Manufacturer:** Wilkins **Model:** 375A
**Size:** 3 **Orientation:** H **Meters:**
**Manual:** 9 **0.25% Pb:** No **Spare Parts Only:** No
**Approved:** 20-Oct-2008 **Renewed:** 20-Oct-2017 **Bypass:**
**Shutoffs:**
(ppp),qqq,sss,ttt,yyy,zzz,dddd,ssss,uuuu,vvvv,xxxx,yyyy,aaaaa,kkkkk,lllll,gggggg,iiiiii,jjjjjj,llllll,mmmmmm,oooooo
**Notes:** Up to serial number X18805

---

**Type:** RP **Manufacturer:** Wilkins **Model:** 375A
**Size:** 3 **Orientation:** H **Meters:**
**Manual:** 9 **0.25% Pb:** Yes **Spare Parts Only:** No
**Approved:** 09-Sep-2010 **Renewed:** 09-Sep-2016 **Bypass:**
**Shutoffs:** (ppp),qqq,sss,ttt,yyy,ssss,uuuu,vvvv,xxxx,yyyy,aaaaa,kkkkk,lllll,gggggg,iiiiii,jjjjjj,llllll,mmmmmm,oooooo
**Notes:** Serial number X18805 and higher

---

**Type:** RP **Manufacturer:** Wilkins **Model:** 375A
**Size:** 4 **Orientation:** H **Meters:**
**Manual:** 9 **0.25% Pb:** No **Spare Parts Only:** No
**Approved:** 02-Jun-2004 **Renewed:** 02-Jun-2016 **Bypass:**
**Shutoffs:**
(ppp),qqq,sss,ttt,www,yyy,zzz,dddd,eeee,ssss,uuuu,vvvv,xxxx,yyyy,aaaaa,kkkkk,lllll,gggggg,iiiiii,jjjjjj,llllll,mmmmmm,oooooo
**Notes:** Up to serial number X18805

**Type:** RP **Manufacturer:** Wilkins **Model:** 375A
**Size:** 4 **Orientation:** H **Meters:**
**Manual:** 9 **0.25% Pb:** Yes **Spare Parts Only:** No
**Approved:** 09-Sep-2010 **Renewed:** 09-Sep-2016 **Bypass:**
**Shutoffs:**
(ppp),qqq,sss,ttt,www,yyy,zzz,ssss,uuuu,vvvv,xxxx,yyyy,aaaaa,kkkkk,lllll,gggggg,iiiiii,jjjjjj,llllll,mmmmmm,oooooo
**Notes:** Serial number X18805 and higher

---

**Type:** RP **Manufacturer:** Wilkins **Model:** 375A
**Size:** 6 **Orientation:** H **Meters:**
**Manual:** 9 **0.25% Pb:** No **Spare Parts Only:** No
**Approved:** 25-Nov-2003 **Renewed:** 25-Nov-2015 **Bypass:**
**Shutoffs:**
(ppp),qqq,sss,ttt,www,yyy,zzz,dddd,eeee,ssss,uuuu,vvvv,xxxx,yyyy,aaaaa,kkkkk,lllll,gggggg,iiiiii,jjjjjj,llllll,mmmmmm,oooooo
**Notes:** Up to serial number X18805

---

**Type:** RP **Manufacturer:** Wilkins **Model:** 375A
**Size:** 6 **Orientation:** H **Meters:**
**Manual:** 9 **0.25% Pb:** Yes **Spare Parts Only:** No
**Approved:** 09-Sep-2010 **Renewed:** 09-Sep-2016 **Bypass:**
**Shutoffs:**
(ppp),qqq,sss,ttt,www,yyy,zzz,ssss,uuuu,vvvv,xxxx,yyyy,aaaaa,kkkkk,lllll,gggggg,iiiiii,jjjjjj,llllll,mmmmmm,oooooo
**Notes:** Serial number X18805 and higher

---

**Type:** RP **Manufacturer:** Wilkins **Model:** 375A
**Size:** 8 **Orientation:** H **Meters:**
**Manual:** 9 **0.25% Pb:** No **Spare Parts Only:** No
**Approved:** 15-Jun-2004 **Renewed:** 15-Jun-2016 **Bypass:**
**Shutoffs:**
(ppp),qqq,sss,ttt,www,yyy,zzz,ssss,uuuu,vvvv,xxxx,yyyy,aaaaa,kkkkk,lllll,gggggg,iiiiii,jjjjjj,llllll,mmmmmm,oooooo
**Notes:** Up to serial number X18805

---

**Type:** RP **Manufacturer:** Wilkins **Model:** 375A
**Size:** 8 **Orientation:** H **Meters:**
**Manual:** 9 **0.25% Pb:** Yes **Spare Parts Only:** No
**Approved:** 09-Sep-2010 **Renewed:** 09-Sep-2016 **Bypass:**
**Shutoffs:** (ppp),qqq,sss,ttt,www,yyy,ssss,uuuu,vvvv,xxxx,yyyy,aaaaa,kkkkk,lllll,gggggg,iiiiii,jjjjjj,llllll,mmmmmm,oooooo
**Notes:** Serial number X18805 and higher


2018 © University of Southern California

**Type:** RP **Manufacturer:** Wilkins **Model:** 375A
**Size:** 10 **Orientation:** H **Meters:**
**Manual:** 9 **0.25% Pb:** No **Spare Parts Only:** No
**Approved:** 02-Mar-2007 **Renewed:** 02-Mar-2016 **Bypass:**
**Shutoffs:**
(ppp),qqq,sss,ttt,www,yyy,zzz,dddd,eeee,ssss,uuuu,vvvv,xxxx,yyyy,aaaaa,kkkkk,lllll,gggggg,iiiiii,jjjjjj,llllll,mmmmmm,oooooo
**Notes:** Up to serial number X18805

---

**Type:** RP **Manufacturer:** Wilkins **Model:** 375A
**Size:** 10 **Orientation:** H **Meters:**
**Manual:** 9 **0.25% Pb:** Yes **Spare Parts Only:** No
**Approved:** 09-Sep-2010 **Renewed:** 09-Sep-2016 **Bypass:**
**Shutoffs:** (ppp),qqq,sss,ttt,www,yyy,ssss,uuuu,vvvv,xxxx,yyyy,aaaaa,kkkkk,lllll,gggggg,iiiiii,jjjjjj,llllll,mmmmmm,oooooo
**Notes:** Serial number X18805 and higher

---

**Type:** RP **Manufacturer:** Wilkins **Model:** 375AMS
**Size:** 2 1/2 **Orientation:** H **Meters:**
**Manual:** 9 **0.25% Pb:** Yes **Spare Parts Only:** No
**Approved:** 05-Nov-2014 **Renewed:** 05-Nov-2017 **Bypass:**
**Shutoffs:** (ppp),qqq,sss,ttt,www,yyy,zzz,ssss,uuuu,vvvv,xxxx,yyyy,aaaaa,kkkkk,lllll

---

**Type:** RP **Manufacturer:** Wilkins **Model:** 375AMS
**Size:** 3 **Orientation:** H **Meters:**
**Manual:** 9 **0.25% Pb:** Yes **Spare Parts Only:** No
**Approved:** 05-Nov-2014 **Renewed:** 05-Nov-2017 **Bypass:**
**Shutoffs:** (ppp),qqq,sss,ttt,www,yyy,zzz,ssss,uuuu,vvvv,xxxx,yyyy,aaaaa,kkkkk,lllll

---

**Type:** RP **Manufacturer:** Wilkins **Model:** 375AMS
**Size:** 4 **Orientation:** H **Meters:**
**Manual:** 9 **0.25% Pb:** Yes **Spare Parts Only:** No
**Approved:** 05-Nov-2014 **Renewed:** 05-Nov-2017 **Bypass:**
**Shutoffs:** (ppp),qqq,sss,ttt,www,yyy,zzz,ssss,uuuu,vvvv,xxxx,yyyy,aaaaa,kkkkk,lllll

---

**Type:** RP **Manufacturer:** Wilkins **Model:** 375AMS
**Size:** 6 **Orientation:** H **Meters:**
**Manual:** 9 **0.25% Pb:** Yes **Spare Parts Only:** No
**Approved:** 05-Nov-2014 **Renewed:** 05-Nov-2017 **Bypass:**
**Shutoffs:** (ppp),qqq,sss,ttt,www,yyy,zzz,ssss,uuuu,vvvv,xxxx,yyyy,aaaaa,kkkkk,lllll

**Type:** RP **Manufacturer:** Wilkins **Model:** 375AMS
**Size:** 8 **Orientation:** H **Meters:**
**Manual:** 9 **0.25% Pb:** Yes **Spare Parts Only:** No
**Approved:** 05-Nov-2014 **Renewed:** 05-Nov-2017 **Bypass:**
**Shutoffs:** (ppp),qqq,sss,ttt,www,yyy,ssss,uuuu,vvvv,xxxx,yyyy,aaaaa,kkkkk,lllll

---

**Type:** RP **Manufacturer:** Wilkins **Model:** 375AMS
**Size:** 10 **Orientation:** H **Meters:**
**Manual:** 9 **0.25% Pb:** Yes **Spare Parts Only:** No
**Approved:** 05-Nov-2014 **Renewed:** 05-Nov-2017 **Bypass:**
**Shutoffs:** (ppp),qqq,sss,ttt,www,yyy,zzz,ssss,uuuu,vvvv,xxxx,yyyy,aaaaa,kkkkk,lllll

---

**Type:** RP **Manufacturer:** Wilkins **Model:** 375AR
**Size:** 2 1/2 **Orientation:** H **Meters:**
**Manual:** 9 **0.25% Pb:** No **Spare Parts Only:** No
**Approved:** 16-Jun-2010 **Renewed:** 16-Jun-2016 **Bypass:**
**Shutoffs:**
(ppp),qqq,sss,ttt,yyy,zzz,dddd,ssss,uuuu,vvvv,xxxx,yyyy,aaaaa,kkkkk,lllll,gggggg,iiiiii,jjjjjj,llllll,mmmmmm,oooooo
**Notes:** Integral grooved spool between the #2 ck and #2 SOV - assembly length: min. 34 1/4" and max. 47 1/8" Up to serial number X18805

---

**Type:** RP **Manufacturer:** Wilkins **Model:** 375AR
**Size:** 2 1/2 **Orientation:** H **Meters:**
**Manual:** 9 **0.25% Pb:** Yes **Spare Parts Only:** No
**Approved:** 09-Sep-2010 **Renewed:** 09-Sep-2016 **Bypass:**
**Shutoffs:** (ppp),qqq,sss,ttt,yyy,ssss,uuuu,vvvv,xxxx,yyyy,aaaaa,kkkkk,lllll,gggggg,iiiiii,jjjjjj,llllll,mmmmmm,oooooo
**Notes:** Only Serial No G00110 and higher approved. These have an Integral grooved spool between the #2 ck and #2 SOV with length: min. 34 1/4" and max. 47 1/8"

---

**Type:** RP **Manufacturer:** Wilkins **Model:** 375AR
**Size:** 3 **Orientation:** H **Meters:**
**Manual:** 9 **0.25% Pb:** No **Spare Parts Only:** No
**Approved:** 16-Jun-2010 **Renewed:** 16-Jun-2016 **Bypass:**
**Shutoffs:**
(ppp),qqq,sss,ttt,yyy,zzz,dddd,ssss,uuuu,vvvv,xxxx,yyyy,aaaaa,kkkkk,lllll,gggggg,iiiiii,jjjjjj,llllll,mmmmmm,oooooo
**Notes:** Only Serial No G00110 and higher approved. These have an Integral grooved spool between the #2 ck and #2 SOV with length: min. 34 1/4" and max. 47 1/8"


2018 © University of Southern California

**Type:** RP **Manufacturer:** Wilkins **Model:** 375AR
**Size:** 3 **Orientation:** H **Meters:**
**Manual:** 9 **0.25% Pb:** Yes **Spare Parts Only:** No
**Approved:** 09-Sep-2010 **Renewed:** 09-Sep-2016 **Bypass:**
**Shutoffs:** (ppp),qqq,sss,ttt,yyy,ssss,uuuu,vvvv,xxxx,yyyy,aaaaa,kkkkk,lllll,gggggg,iiiiii,jjjjjj,llllll,mmmmmm,oooooo
**Notes:** Only Serial No G00110 and higher approved. These have an Integral grooved spool between the #2 ck and #2 SOV with length: min. 34 1/4" and max. 47 1/8"

---

**Type:** RP **Manufacturer:** Wilkins **Model:** 375AR
**Size:** 4 **Orientation:** H **Meters:**
**Manual:** 9 **0.25% Pb:** No **Spare Parts Only:** No
**Approved:** 25-Mar-2010 **Renewed:** 25-Mar-2016 **Bypass:**
**Shutoffs:**
(ppp),qqq,sss,ttt,www,yyy,zzz,dddd,eeee,ssss,uuuu,vvvv,xxxx,yyyy,aaaaa,kkkkk,lllll,gggggg,iiiiii,jjjjjj,llllll,mmmmmm,oooooo
**Notes:** Only Serial No G00110 and higher approved. These have an Integral grooved spool between the #2 ck and #2 SOV with length: min. 34 1/4" and max. 47 1/8"

---

**Type:** RP **Manufacturer:** Wilkins **Model:** 375AR
**Size:** 4 **Orientation:** H **Meters:**
**Manual:** 9 **0.25% Pb:** Yes **Spare Parts Only:** No
**Approved:** 09-Sep-2010 **Renewed:** 09-Sep-2016 **Bypass:**
**Shutoffs:**
(ppp),qqq,sss,ttt,www,yyy,zzz,dddd,eeee,ssss,uuuu,vvvv,xxxx,yyyy,aaaaa,kkkkk,lllll,gggggg,iiiiii,jjjjjj,llllll,mmmmmm,oooooo
**Notes:** Only Serial No G00110 and higher approved. These have an Integral grooved spool between the #2 ck and #2 SOV with length: min. 35 3/4" and max. 62 1/4"

---

**Type:** RP **Manufacturer:** Wilkins **Model:** 375AR
**Size:** 6 **Orientation:** H **Meters:**
**Manual:** 9 **0.25% Pb:** No **Spare Parts Only:** No
**Approved:** 25-Mar-2010 **Renewed:** 25-Mar-2016 **Bypass:**
**Shutoffs:**
(ppp),qqq,sss,ttt,www,yyy,zzz,dddd,eeee,ssss,uuuu,vvvv,xxxx,yyyy,aaaaa,kkkkk,lllll,gggggg,iiiiii,jjjjjj,llllll,mmmmmm,oooooo
**Notes:** Only Serial No G00110 and higher approved. These have an Integral grooved spool between the #2 ck and #2 SOV with length: min. 34 1/4" and max. 47 1/8"

**Type:** RP | **Manufacturer:** Wilkins | **Model:** 375AR
**Size:** 6 | **Orientation:** H | **Meters:**
**Manual:** 9 | **0.25% Pb:** Yes | **Spare Parts Only:** No
**Approved:** 09-Sep-2010 | **Renewed:** 09-Sep-2016 | **Bypass:**
**Shutoffs:**
(ppp),qqq,sss,ttt,www,yyy,zzz,dddd,eeee,ssss,uuuu,vvvv,xxxx,yyyy,aaaaa,kkkkk,lllll,gggggg,iiiiii,jjjjjj,llllll,mmmmmm,ooooo
o
**Notes:** Only Serial No G00110 and higher approved. These have an Integral grooved spool between the #2 ck and #2 SOV with length: min. 42 1/2" and max. 71 1/4"

---

**Type:** RP | **Manufacturer:** Wilkins | **Model:** 375AR
**Size:** 8 | **Orientation:** H | **Meters:**
**Manual:** 9 | **0.25% Pb:** No | **Spare Parts Only:** No
**Approved:** 25-Mar-2010 | **Renewed:** 25-Mar-2016 | **Bypass:**
**Shutoffs:**
(ppp),qqq,sss,ttt,www,yyy,zzz,dddd,eeee,ssss,uuuu,vvvv,xxxx,yyyy,aaaaa,kkkkk,lllll,gggggg,iiiiii,jjjjjj,llllll,mmmmmm,ooooo
o
**Notes:** Only Serial No G00110 and higher approved. These have an Integral grooved spool between the #2 ck and #2 SOV with length: min. 34 1/4" and max. 47 1/8"

---

**Type:** RP | **Manufacturer:** Wilkins | **Model:** 375AR
**Size:** 8 | **Orientation:** H | **Meters:**
**Manual:** 9 | **0.25% Pb:** Yes | **Spare Parts Only:** No
**Approved:** 09-Sep-2010 | **Renewed:** 09-Sep-2016 | **Bypass:**
**Shutoffs:**
(ppp),qqq,sss,ttt,www,yyy,zzz,dddd,eeee,ssss,uuuu,vvvv,xxxx,yyyy,aaaaa,kkkkk,lllll,gggggg,iiiiii,jjjjjj,llllll,mmmmmm,ooooo
o
**Notes:** Only Serial No G00110 and higher approved. These have an Integral grooved spool between the #2 ck and #2 SOV with length: min. 57 7/8" and max. 86"

---

**Type:** RP | **Manufacturer:** Wilkins | **Model:** 375AR
**Size:** 10 | **Orientation:** H | **Meters:**
**Manual:** 9 | **0.25% Pb:** No | **Spare Parts Only:** No
**Approved:** 25-Mar-2010 | **Renewed:** 25-Mar-2016 | **Bypass:**
**Shutoffs:**
(ppp),qqq,sss,ttt,www,yyy,zzz,dddd,eeee,ssss,uuuu,vvvv,xxxx,yyyy,aaaaa,kkkkk,lllll,gggggg,iiiiii,jjjjjj,llllll,mmmmmm,ooooo
o
**Notes:** Only Serial No G00110 and higher approved. These have an Integral grooved spool between the #2 ck and #2 SOV with length: min. 34 1/4" and max. 47 1/8"


2018 © University of Southern California

**Type:** RP **Manufacturer:** Wilkins **Model:** 375AR
**Size:** 10 **Orientation:** H **Meters:**
**Manual:** 9 **0.25% Pb:** Yes **Spare Parts Only:** No
**Approved:** 09-Sep-2010 **Renewed:** 09-Sep-2016 **Bypass:**
**Shutoffs:**
(ppp),qqq,sss,ttt,www,yyy,zzz,dddd,eeee,ssss,uuuu,vvvv,xxxx,yyyy,aaaaa,kkkkk,lllll,gggggg,iiiiii,jjjjjj,llllll,mmmmmm,ooooo
o
**Notes:** Only Serial No G00110 and higher approved. These have an Integral grooved spool between the #2 ck and #2 SOV with length: min. 61 3/8" and max. 100 5/8"

---

**Type:** RP **Manufacturer:** Wilkins **Model:** 375ARMS
**Size:** 2 1/2 **Orientation:** H **Meters:**
**Manual:** 9 **0.25% Pb:** Yes **Spare Parts Only:** No
**Approved:** 05-Nov-2014 **Renewed:** 05-Nov-2017 **Bypass:**
**Shutoffs:** (ppp),qqq,sss,ttt,yyy,ssss,uuuu,vvvv,xxxx,yyyy,aaaaa,kkkkk,lllll
**Notes:** These have an Integral grooved spool between the #2 ck and #2 SOV with length: min. 34 1/4" and max. 47 1/8"

---

**Type:** RP **Manufacturer:** Wilkins **Model:** 375ARMS
**Size:** 3 **Orientation:** H **Meters:**
**Manual:** 9 **0.25% Pb:** Yes **Spare Parts Only:** No
**Approved:** 05-Nov-2014 **Renewed:** 05-Nov-2017 **Bypass:**
**Shutoffs:** (ppp),qqq,sss,ttt,yyy,ssss,uuuu,vvvv,xxxx,yyyy,aaaaa,kkkkk,lllll
**Notes:** These have an Integral grooved spool between the #2 ck and #2 SOV with length: min. 34 1/4" and max. 48 1/8"

---

**Type:** RP **Manufacturer:** Wilkins **Model:** 375ARMS
**Size:** 4 **Orientation:** H **Meters:**
**Manual:** 9 **0.25% Pb:** Yes **Spare Parts Only:** No
**Approved:** 05-Nov-2014 **Renewed:** 05-Nov-2017 **Bypass:**
**Shutoffs:** (ppp),qqq,sss,ttt,www,yyy,zzz,dddd,eeee,ssss,uuuu,vvvv,xxxx,yyyy,aaaaa,kkkkk,lllll
**Notes:** These have an Integral grooved spool between the #2 ck and #2 SOV with length: min. 35 3/4" and max. 62 1/4"

---

**Type:** RP **Manufacturer:** Wilkins **Model:** 375ARMS
**Size:** 6 **Orientation:** H **Meters:**
**Manual:** 9 **0.25% Pb:** Yes **Spare Parts Only:** No
**Approved:** 05-Nov-2014 **Renewed:** 05-Nov-2017 **Bypass:**
**Shutoffs:** (ppp),qqq,sss,ttt,www,yyy,zzz,dddd,eeee,ssss,uuuu,vvvv,xxxx,yyyy,aaaaa,kkkkk,lllll
**Notes:** These have an Integral grooved spool between the #2 ck and #2 SOV with length: min. 42 1/2" and max. 71 1/4"

**Type:** RP **Manufacturer:** Wilkins **Model:** 375ARMS
**Size:** 8 **Orientation:** H **Meters:**
**Manual:** 9 **0.25% Pb:** Yes **Spare Parts Only:** No
**Approved:** 05-Nov-2014 **Renewed:** 05-Nov-2017 **Bypass:**
**Shutoffs:** (ppp),qqq,sss,ttt,www,yyy,zzz,dddd,eeee,ssss,uuuu,vvvv,xxxx,yyyy,aaaaa,kkkkk,lllll
**Notes:** These have an Integral grooved spool between the #2 ck and #2 SOV with length: min. 57 7/8" and max. 86"

---

**Type:** RP **Manufacturer:** Wilkins **Model:** 375ARMS
**Size:** 10 **Orientation:** H **Meters:**
**Manual:** 9 **0.25% Pb:** Yes **Spare Parts Only:** No
**Approved:** 05-Nov-2014 **Renewed:** 05-Nov-2017 **Bypass:**
**Shutoffs:** (ppp),qqq,sss,ttt,www,yyy,zzz,dddd,eeee,ssss,uuuu,vvvv,xxxx,yyyy,aaaaa,kkkkk,lllll
**Notes:** These have an Integral grooved spool between the #2 ck and #2 SOV with length: min. 61 3/8" and max. 100 5/8"

---

**Type:** RP **Manufacturer:** Wilkins **Model:** 375ARXL
**Size:** 2 1/2 **Orientation:** H **Meters:**
**Manual:** 9 **0.25% Pb:** Yes **Spare Parts Only:** No
**Approved:** 16-Jun-2010 **Renewed:** 16-Jun-2016 **Bypass:**
**Shutoffs:** (ppp),sss,ttt,qqq,yyy,zzz,dddd
**Notes:** Only Serial No G00110 and higher approved. These have an Integral grooved spool between the #2 ck and #2 SOV with length: min. 34 1/4" and max. 47 1/8"

---

**Type:** RP **Manufacturer:** Wilkins **Model:** 375ARXL
**Size:** 3 **Orientation:** H **Meters:**
**Manual:** 9 **0.25% Pb:** Yes **Spare Parts Only:** No
**Approved:** 16-Jun-2010 **Renewed:** 16-Jun-2016 **Bypass:**
**Shutoffs:** (ppp),sss,ttt,qqq,yyy,zzz,dddd
**Notes:** Only Serial No G00110 and higher approved. These have an Integral grooved spool between the #2 ck and #2 SOV with length: min. 35 3/4" and max. 62 1/4"

---

**Type:** RP **Manufacturer:** Wilkins **Model:** 375ARXL
**Size:** 4 **Orientation:** H **Meters:**
**Manual:** 9 **0.25% Pb:** Yes **Spare Parts Only:** No
**Approved:** 16-Jun-2010 **Renewed:** 16-Jun-2016 **Bypass:**
**Shutoffs:** (ppp),qqq,sss,ttt,www,yyy,zzz,dddd,eeee,ssss,uuuu,vvvv,xxxx,yyyy,aaaaa
**Notes:** Only Serial No G00110 and higher approved. These have an Integral grooved spool between the #2 ck and #2 SOV with length: min. 42 1/2" and max. 71 1/4"


2018 © University of Southern California

**Type:** RP **Manufacturer:** Wilkins **Model:** 375ARXL
**Size:** 6 **Orientation:** H **Meters:**
**Manual:** 9 **0.25% Pb:** Yes **Spare Parts Only:** No
**Approved:** 16-Jun-2010 **Renewed:** 16-Jun-2016 **Bypass:**
**Shutoffs:** (ppp),qqq,sss,ttt,www,yyy,zzz,dddd,eeee,ssss,uuuu,vvvv,xxxx,yyyy,aaaaa
**Notes:** Only Serial No G00110 and higher approved. These have an Integral grooved spool between the #2 ck and #2 SOV with length: min. 57 7/8" and max. 86"

---

**Type:** RP **Manufacturer:** Wilkins **Model:** 375ARXL
**Size:** 8 **Orientation:** H **Meters:**
**Manual:** 9 **0.25% Pb:** Yes **Spare Parts Only:** No
**Approved:** 16-Jun-2010 **Renewed:** 16-Jun-2016 **Bypass:**
**Shutoffs:** (ppp),qqq,sss,ttt,www,yyy,zzz,dddd,eeee,ssss,uuuu,vvvv,xxxx,yyyy,aaaaa
**Notes:** Only Serial No G00110 and higher approved. These have an Integral grooved spool between the #2 ck and #2 SOV with length: min. 61 3/8" and max. 100 5/8"

---

**Type:** RP **Manufacturer:** Wilkins **Model:** 375ARXL
**Size:** 10 **Orientation:** H **Meters:**
**Manual:** 9 **0.25% Pb:** Yes **Spare Parts Only:** No
**Approved:** 16-Jun-2010 **Renewed:** 16-Jun-2016 **Bypass:**
**Shutoffs:** (ppp),qqq,sss,ttt,www,yyy,zzz,dddd,eeee,ssss,uuuu,vvvv,xxxx,yyyy,aaaaa
**Notes:** Integral grooved spool between the #2 ck and #2 SOV - assembly length: min. 61 3/8" and max. 100 5/8"

---

**Type:** RP **Manufacturer:** Wilkins **Model:** 375AST
**Size:** 2 1/2 **Orientation:** H **Meters:**
**Manual:** 10 **0.25% Pb:** Yes **Spare Parts Only:** No
**Approved:** 12-Jun-2015 **Renewed:** 12-Jun-2018 **Bypass:**
**Shutoffs:** (yyy),ssss,uuuu,vvvv,xxxx,yyyy,aaaaa,kkkkk,lllll,ggggggg,iiiiii,jjjjjj,llllll,mmmmmm,oooooo

---

**Type:** RP **Manufacturer:** Wilkins **Model:** 375AST
**Size:** 3 **Orientation:** H **Meters:**
**Manual:** 10 **0.25% Pb:** Yes **Spare Parts Only:** No
**Approved:** 12-Jun-2015 **Renewed:** 12-Jun-2018 **Bypass:**
**Shutoffs:** (yyy),ssss,uuuu,vvvv,xxxx,yyyy,aaaaa,kkkkk,lllll,ggggggg,iiiiii,jjjjjj,llllll,mmmmmm,oooooo

---

**Type:** RP **Manufacturer:** Wilkins **Model:** 375AST
**Size:** 4 **Orientation:** H **Meters:**
**Manual:** 10 **0.25% Pb:** Yes **Spare Parts Only:** No
**Approved:** 31-May-2012 **Renewed:** 31-May-2018 **Bypass:**
**Shutoffs:** (yyy),ssss,uuuu,vvvv,xxxx,yyyy,aaaaa,kkkkk,lllll,ggggggg,iiiiii,jjjjjj,llllll,mmmmmm,oooooo

**Type:** RP **Manufacturer:** Wilkins **Model:** 375AST
**Size:** 6 **Orientation:** H **Meters:**
**Manual:** 10 **0.25% Pb:** Yes **Spare Parts Only:** No
**Approved:** 24-Jun-2013 **Renewed:** 24-Jun-2016 **Bypass:**
**Shutoffs:** (yyy),ssss,uuuu,vvvv,xxxx,yyyy,aaaaa,kkkkk,lllll,gggggg,iiiiii,jjjjjj,llllll,mmmmmm,oooooo

---

**Type:** RP **Manufacturer:** Wilkins **Model:** 375AST
**Size:** 8 **Orientation:** H **Meters:**
**Manual:** 10 **0.25% Pb:** Yes **Spare Parts Only:** No
**Approved:** 26-Nov-2013 **Renewed:** 26-Nov-2016 **Bypass:**
**Shutoffs:** (yyy),ssss,uuuu,vvvv,xxxx,yyyy,aaaaa,kkkkk,lllll,gggggg,iiiiii,jjjjjj,llllll,mmmmmm,oooooo

---

**Type:** RP **Manufacturer:** Wilkins **Model:** 375AST
**Size:** 10 **Orientation:** H **Meters:**
**Manual:** 10 **0.25% Pb:** Yes **Spare Parts Only:** No
**Approved:** 26-Nov-2013 **Renewed:** 26-Nov-2016 **Bypass:**
**Shutoffs:** (yyy),ssss,uuuu,vvvv,xxxx,yyyy,aaaaa,kkkkk,lllll,gggggg,iiiiii,jjjjjj,llllll,mmmmmm,oooooo

---

**Type:** RP **Manufacturer:** Wilkins **Model:** 375ASTMS
**Size:** 2 1/2 **Orientation:** H **Meters:**
**Manual:** 10 **0.25% Pb:** Yes **Spare Parts Only:** No
**Approved:** 05-Nov-2014 **Renewed:** 05-Nov-2017 **Bypass:**
**Shutoffs:** (yyy),ssss,uuuu,vvvv,xxxx,yyyy,aaaaa,kkkkk,lllll

---

**Type:** RP **Manufacturer:** Wilkins **Model:** 375ASTMS
**Size:** 3 **Orientation:** H **Meters:**
**Manual:** 10 **0.25% Pb:** Yes **Spare Parts Only:** No
**Approved:** 05-Nov-2014 **Renewed:** 05-Nov-2017 **Bypass:**
**Shutoffs:** (yyy),ssss,uuuu,vvvv,xxxx,yyyy,aaaaa,kkkkk,lllll

---

**Type:** RP **Manufacturer:** Wilkins **Model:** 375ASTMS
**Size:** 4 **Orientation:** H **Meters:**
**Manual:** 10 **0.25% Pb:** Yes **Spare Parts Only:** No
**Approved:** 05-Nov-2014 **Renewed:** 05-Nov-2017 **Bypass:**
**Shutoffs:** (yyy),ssss,uuuu,vvvv,xxxx,yyyy,aaaaa,kkkkk,lllll

---

**Type:** RP **Manufacturer:** Wilkins **Model:** 375ASTMS
**Size:** 6 **Orientation:** H **Meters:**
**Manual:** 10 **0.25% Pb:** Yes **Spare Parts Only:** No
**Approved:** 05-Nov-2014 **Renewed:** 05-Nov-2017 **Bypass:**
**Shutoffs:** (yyy),ssss,uuuu,vvvv,xxxx,yyyy,aaaaa,kkkkk,lllll


2018 © University of Southern California

**Type:** RP **Manufacturer:** Wilkins **Model:** 375ASTMS
**Size:** 8 **Orientation:** H **Meters:**
**Manual:** 10 **0.25% Pb:** Yes **Spare Parts Only:** No
**Approved:** 05-Nov-2014 **Renewed:** 05-Nov-2017 **Bypass:**
**Shutoffs:** (yyy),ssss,uuuu,vvvv,xxxx,yyyy,aaaaa,kkkkk,lllll

---

**Type:** RP **Manufacturer:** Wilkins **Model:** 375ASTMS
**Size:** 10 **Orientation:** H **Meters:**
**Manual:** 10 **0.25% Pb:** Yes **Spare Parts Only:** No
**Approved:** 05-Nov-2014 **Renewed:** 05-Nov-2017 **Bypass:**
**Shutoffs:** (yyy),ssss,uuuu,vvvv,xxxx,yyyy,aaaaa,kkkkk,lllll

---

**Type:** RP **Manufacturer:** Wilkins **Model:** 375ASTR
**Size:** 2 1/2 **Orientation:** H **Meters:**
**Manual:** 10 **0.25% Pb:** Yes **Spare Parts Only:** No
**Approved:** 12-Jun-2015 **Renewed:** 12-Jun-2018 **Bypass:**
**Shutoffs:** (yyy),ssss,uuuu,vvvv,xxxx,yyyy,aaaaa,kkkkk,lllll,gggggg,iiiiii,jjjjjj,llllll,mmmmmm,oooooo
**Notes:** Integral Stainless Steel grooved spool between the #2 ck and #2 SOV - assembly length: min. 34 1/4" and max. 47 1/8"

---

**Type:** RP **Manufacturer:** Wilkins **Model:** 375ASTR
**Size:** 3 **Orientation:** H **Meters:**
**Manual:** 10 **0.25% Pb:** Yes **Spare Parts Only:** No
**Approved:** 12-Jun-2015 **Renewed:** 12-Jun-2018 **Bypass:**
**Shutoffs:** (yyy),ssss,uuuu,vvvv,xxxx,yyyy,aaaaa,kkkkk,lllll,gggggg,iiiiii,jjjjjj,llllll,mmmmmm,oooooo
**Notes:** Integral Stainless Steel grooved spool between the #2 ck and #2 SOV - assembly length: min. 34 3/4" and max. 48 1/8"

---

**Type:** RP **Manufacturer:** Wilkins **Model:** 375ASTR
**Size:** 4 **Orientation:** H **Meters:**
**Manual:** 10 **0.25% Pb:** Yes **Spare Parts Only:** No
**Approved:** 31-May-2012 **Renewed:** 31-May-2018 **Bypass:**
**Shutoffs:** (yyy),ssss,uuuu,vvvv,xxxx,yyyy,aaaaa,kkkkk,lllll,gggggg,iiiiii,jjjjjj,llllll,mmmmmm,oooooo
**Notes:** Integral Stainless Steel grooved spool between the #2 ck and #2 SOV - assembly length: min. 35 3/4" and max. 62 1/4"

**Type:** RP **Manufacturer:** Wilkins **Model:** 375ASTR
**Size:** 6 **Orientation:** H **Meters:**
**Manual:** 10 **0.25% Pb:** Yes **Spare Parts Only:** No
**Approved:** 05-Nov-2013 **Renewed:** 05-Nov-2016 **Bypass:**
**Shutoffs:** (yyy),ssss,uuuu,vvvv,xxxx,yyyy,aaaaa,kkkkk,lllll,gggggg,iiiiii,jjjjjj,llllll,mmmmmm,oooooo
**Notes:** Integral Stainless Steel grooved spool between the #2 ck and #2 SOV - assembly length: min. 46" and max. 71 1/4"

---

**Type:** RP **Manufacturer:** Wilkins **Model:** 375ASTR
**Size:** 8 **Orientation:** H **Meters:**
**Manual:** 10 **0.25% Pb:** Yes **Spare Parts Only:** No
**Approved:** 23-Jan-2014 **Renewed:** 23-Jan-2017 **Bypass:**
**Shutoffs:** (yyy),ssss,uuuu,vvvv,xxxx,yyyy,aaaaa,kkkkk,lllll,gggggg,iiiiii,jjjjjj,llllll,mmmmmm,oooooo
**Notes:** Integral Stainless Steel grooved spool between the #2 ck and #2 SOV - assembly length: min. 48 3/4" and max. 86"

---

**Type:** RP **Manufacturer:** Wilkins **Model:** 375ASTR
**Size:** 10 **Orientation:** H **Meters:**
**Manual:** 10 **0.25% Pb:** Yes **Spare Parts Only:** No
**Approved:** 23-Jan-2014 **Renewed:** 23-Jan-2017 **Bypass:**
**Shutoffs:** (yyy),ssss,uuuu,vvvv,xxxx,yyyy,aaaaa,kkkkk,lllll,gggggg,iiiiii,jjjjjj,llllll,mmmmmm,oooooo
**Notes:** Integral Stainless Steel grooved spool between the #2 ck and #2 SOV - assembly length: min. 52 5/8" and max. 100 5/8"

---

**Type:** RP **Manufacturer:** Wilkins **Model:** 375ASTRMS
**Size:** 2 1/2 **Orientation:** H **Meters:**
**Manual:** 10 **0.25% Pb:** Yes **Spare Parts Only:** No
**Approved:** 05-Nov-2014 **Renewed:** 05-Nov-2017 **Bypass:**
**Shutoffs:** (yyy),ssss,uuuu,vvvv,xxxx,yyyy,aaaaa,kkkkk,lllll
**Notes:** Integral Stainless Steel grooved spool between the #2 ck and #2 SOV - assembly length: min. 31" and max. 47 1/8"

---

**Type:** RP **Manufacturer:** Wilkins **Model:** 375ASTRMS
**Size:** 3 **Orientation:** H **Meters:**
**Manual:** 10 **0.25% Pb:** Yes **Spare Parts Only:** No
**Approved:** 05-Nov-2014 **Renewed:** 05-Nov-2017 **Bypass:**
**Shutoffs:** (yyy),ssss,uuuu,vvvv,xxxx,yyyy,aaaaa,kkkkk,lllll
**Notes:** Integral Stainless Steel grooved spool between the #2 ck and #2 SOV - assembly length: min. 31 1/2" and max. 48 1/8"


2018 © University of Southern California

**Type:** RP **Manufacturer:** Wilkins **Model:** 375ASTRMS
**Size:** 4 **Orientation:** H **Meters:**
**Manual:** 10 **0.25% Pb:** Yes **Spare Parts Only:** No
**Approved:** 05-Nov-2014 **Renewed:** 05-Nov-2017 **Bypass:**
**Shutoffs:** (yyy),ssss,uuuu,vvvv,xxxx,yyyy,aaaaa,kkkkk,lllll
**Notes:** Integral Stainless Steel grooved spool between the #2 ck and #2 SOV - assembly length: min. 32 5/8" and max. 62 1/4"

---

**Type:** RP **Manufacturer:** Wilkins **Model:** 375ASTRMS
**Size:** 6 **Orientation:** H **Meters:**
**Manual:** 10 **0.25% Pb:** Yes **Spare Parts Only:** No
**Approved:** 05-Nov-2014 **Renewed:** 05-Nov-2017 **Bypass:**
**Shutoffs:** (yyy),ssss,uuuu,vvvv,xxxx,yyyy,aaaaa,kkkkk,lllll
**Notes:** Integral Stainless Steel grooved spool between the #2 ck and #2 SOV - assembly length: min. 39" and max. 71 1/4"

---

**Type:** RP **Manufacturer:** Wilkins **Model:** 375ASTRMS
**Size:** 8 **Orientation:** H **Meters:**
**Manual:** 10 **0.25% Pb:** Yes **Spare Parts Only:** No
**Approved:** 05-Nov-2014 **Renewed:** 05-Nov-2017 **Bypass:**
**Shutoffs:** (yyy),ssss,uuuu,vvvv,xxxx,yyyy,aaaaa,kkkkk,lllll
**Notes:** Integral Stainless Steel grooved spool between the #2 ck and #2 SOV - assembly length: min. 48 3/4" and max. 86"

---

**Type:** RP **Manufacturer:** Wilkins **Model:** 375ASTRMS
**Size:** 10 **Orientation:** H **Meters:**
**Manual:** 10 **0.25% Pb:** Yes **Spare Parts Only:** No
**Approved:** 05-Nov-2014 **Renewed:** 05-Nov-2017 **Bypass:**
**Shutoffs:** (yyy),ssss,uuuu,vvvv,xxxx,yyyy,aaaaa,kkkkk,lllll
**Notes:** Integral Stainless Steel grooved spool between the #2 ck and #2 SOV - assembly length: min. 52 5/8" and max. 100 5/8"

---

**Type:** RP **Manufacturer:** Wilkins **Model:** 375AXL
**Size:** 2 1/2 **Orientation:** H **Meters:**
**Manual:** 9 **0.25% Pb:** No **Spare Parts Only:** No
**Approved:** 14-Apr-2010 **Renewed:** 14-Apr-2016 **Bypass:**
**Shutoffs:** dddd

**Type:** RP
**Manufacturer:** Wilkins
**Model:** 375AXL
**Size:** 2 1/2
**Orientation:** H
**Meters:**
**Manual:** 9
**0.25% Pb:** Yes
**Spare Parts Only:** No
**Approved:** 14-Apr-2010
**Renewed:** 14-Apr-2016
**Bypass:**
**Shutoffs:** (ppp),qqq,sss,ttt,yyy,zzz

---

**Type:** RP
**Manufacturer:** Wilkins
**Model:** 375AXL
**Size:** 3
**Orientation:** H
**Meters:**
**Manual:** 9
**0.25% Pb:** No
**Spare Parts Only:** No
**Approved:** 14-Apr-2010
**Renewed:** 14-Apr-2016
**Bypass:**
**Shutoffs:** dddd

---

**Type:** RP
**Manufacturer:** Wilkins
**Model:** 375AXL
**Size:** 3
**Orientation:** H
**Meters:**
**Manual:** 9
**0.25% Pb:** Yes
**Spare Parts Only:** No
**Approved:** 14-Apr-2010
**Renewed:** 14-Apr-2016
**Bypass:**
**Shutoffs:** (ppp),qqq,sss,ttt,yyy,zzz

---

**Type:** RP
**Manufacturer:** Wilkins
**Model:** 375AXL
**Size:** 4
**Orientation:** H
**Meters:**
**Manual:** 9
**0.25% Pb:** No
**Spare Parts Only:** No
**Approved:** 14-Apr-2010
**Renewed:** 14-Apr-2016
**Bypass:**
**Shutoffs:** dddd,eeee

---

**Type:** RP
**Manufacturer:** Wilkins
**Model:** 375AXL
**Size:** 4
**Orientation:** H
**Meters:**
**Manual:** 9
**0.25% Pb:** Yes
**Spare Parts Only:** No
**Approved:** 14-Apr-2010
**Renewed:** 14-Apr-2016
**Bypass:**
**Shutoffs:** (ppp),qqq,sss,ttt,www,yyy,zzz,ssss,uuuu,vvvv,xxxx,yyyy,aaaaa

---

**Type:** RP
**Manufacturer:** Wilkins
**Model:** 375AXL
**Size:** 6
**Orientation:** H
**Meters:**
**Manual:** 9
**0.25% Pb:** No
**Spare Parts Only:** No
**Approved:** 14-Apr-2010
**Renewed:** 14-Apr-2016
**Bypass:**
**Shutoffs:** dddd,eeee

---

**Type:** RP
**Manufacturer:** Wilkins
**Model:** 375AXL
**Size:** 6
**Orientation:** H
**Meters:**
**Manual:** 9
**0.25% Pb:** Yes
**Spare Parts Only:** No
**Approved:** 14-Apr-2010
**Renewed:** 14-Apr-2016
**Bypass:**
**Shutoffs:** (ppp),qqq,sss,ttt,www,yyy,zzz,ssss,uuuu,vvvv,xxxx,yyyy,aaaaa


2018 © University of Southern California

**Type:** RP
**Manufacturer:** Wilkins
**Model:** 375AXL
**Size:** 8
**Orientation:** H
**Meters:**
**Manual:** 9
**0.25% Pb:** No
**Spare Parts Only:** No
**Approved:** 18-Feb-2010
**Renewed:** 18-Feb-2016
**Bypass:**
**Shutoffs:** zzz,dddd,eeee

---

**Type:** RP
**Manufacturer:** Wilkins
**Model:** 375AXL
**Size:** 8
**Orientation:** H
**Meters:**
**Manual:** 9
**0.25% Pb:** Yes
**Spare Parts Only:** No
**Approved:** 18-Feb-2010
**Renewed:** 18-Feb-2016
**Bypass:**
**Shutoffs:** (ppp),qqq,sss,ttt,www,yyy,ssss,uuuu,vvvv,xxxx,yyyy,aaaaa

---

**Type:** RP
**Manufacturer:** Wilkins
**Model:** 375AXL
**Size:** 10
**Orientation:** H
**Meters:**
**Manual:** 9
**0.25% Pb:** No
**Spare Parts Only:** No
**Approved:** 18-Feb-2010
**Renewed:** 18-Feb-2016
**Bypass:**
**Shutoffs:** zzz,dddd,eeee

---

**Type:** RP
**Manufacturer:** Wilkins
**Model:** 375AXL
**Size:** 10
**Orientation:** H
**Meters:**
**Manual:** 9
**0.25% Pb:** Yes
**Spare Parts Only:** No
**Approved:** 18-Feb-2010
**Renewed:** 18-Feb-2016
**Bypass:**
**Shutoffs:** (ppp),qqq,sss,ttt,www,yyy,ssss,uuuu,vvvv,xxxx,yyyy,aaaaa

---

**Type:** RP
**Manufacturer:** Wilkins
**Model:** 375B
**Size:** 1/2
**Orientation:** H
**Meters:**
**Manual:** 9
**0.25% Pb:** No
**Spare Parts Only:** No
**Approved:** 08-Nov-2012
**Renewed:** 08-Nov-2015
**Bypass:**
**Shutoffs:** (int)
**Notes:** Testcocks: Female Threaded End or 45 degree male SAE flare

---

**Type:** RP
**Manufacturer:** Wilkins
**Model:** 375B
**Size:** 3/4
**Orientation:** H
**Meters:**
**Manual:** 9
**0.25% Pb:** No
**Spare Parts Only:** No
**Approved:** 08-Nov-2012
**Renewed:** 08-Nov-2015
**Bypass:**
**Shutoffs:** (int)
**Notes:** Testcocks: Female Threaded End or 45 degree male SAE flare

**Type:** RP
**Manufacturer:** Wilkins
**Model:** 375B
**Size:** 1
**Orientation:** H
**Meters:**
**Manual:** 9
**0.25% Pb:** No
**Spare Parts Only:** No
**Approved:** 08-Nov-2012
**Renewed:** 08-Nov-2015
**Bypass:**
**Shutoffs:** (int)
**Notes:** Testcocks: Female Threaded End or 45 degree male SAE flare

---

**Type:** RP
**Manufacturer:** Wilkins
**Model:** 375B
**Size:** 1 1/4
**Orientation:** H
**Meters:**
**Manual:** 9
**0.25% Pb:** No
**Spare Parts Only:** No
**Approved:** 08-Nov-2012
**Renewed:** 08-Nov-2015
**Bypass:**
**Shutoffs:** (int)

---

**Type:** RP
**Manufacturer:** Wilkins
**Model:** 375B
**Size:** 1 1/2
**Orientation:** H
**Meters:**
**Manual:** 9
**0.25% Pb:** No
**Spare Parts Only:** No
**Approved:** 08-Nov-2012
**Renewed:** 08-Nov-2015
**Bypass:**
**Shutoffs:** (int)

---

**Type:** RP
**Manufacturer:** Wilkins
**Model:** 375B
**Size:** 2
**Orientation:** H
**Meters:**
**Manual:** 9
**0.25% Pb:** No
**Spare Parts Only:** No
**Approved:** 08-Nov-2012
**Renewed:** 08-Nov-2015
**Bypass:**
**Shutoffs:** (int)

---

**Type:** RP
**Manufacturer:** Wilkins
**Model:** 375MS
**Size:** 2 1/2
**Orientation:** H
**Meters:**
**Manual:** 9
**0.25% Pb:** No
**Spare Parts Only:** No
**Approved:** 03-Jul-2003
**Renewed:** 03-Jul-2018
**Bypass:**
**Shutoffs:** (gg),ee,ff,hh,ll,mm,tt,uu,yy,zz,ppp,qqq,zzz,dddd,ssss,tttt,vvvv,wwww,yyyy,zzzz,kkkkk
**Notes:** Up to serial number L61205

---

**Type:** RP
**Manufacturer:** Wilkins
**Model:** 375MS
**Size:** 2 1/2
**Orientation:** H
**Meters:**
**Manual:** 9
**0.25% Pb:** Yes
**Spare Parts Only:** No
**Approved:** 09-Sep-2010
**Renewed:** 09-Sep-2016
**Bypass:**
**Shutoffs:** (gg),hh,ppp,qqq,ssss,tttt,vvvv,wwww,yyyy,zzzz,kkkkk
**Notes:** Serial number L61205 and higher


2018 © University of Southern California

**Type:** RP **Manufacturer:** Wilkins **Model:** 375MS
**Size:** 3 **Orientation:** H **Meters:**
**Manual:** 9 **0.25% Pb:** No **Spare Parts Only:** No
**Approved:** 03-Jul-2003 **Renewed:** 03-Jul-2018 **Bypass:**
**Shutoffs:** (gg),ee,ff,hh,ll,mm,tt,uu,yy,zz,ppp,qqq,zzz,dddd,ssss,tttt,vvvv,wwww,yyyy,zzzz,kkkkk
**Notes:** Up to serial number L61205

---

**Type:** RP **Manufacturer:** Wilkins **Model:** 375MS
**Size:** 3 **Orientation:** H **Meters:**
**Manual:** 9 **0.25% Pb:** Yes **Spare Parts Only:** No
**Approved:** 09-Sep-2010 **Renewed:** 09-Sep-2016 **Bypass:**
**Shutoffs:** (gg),hh,ppp,qqq,ssss,tttt,vvvv,wwww,yyyy,zzzz,kkkkk
**Notes:** Serial number L61205 and higher

---

**Type:** RP **Manufacturer:** Wilkins **Model:** 375MS
**Size:** 4 **Orientation:** H **Meters:**
**Manual:** 9 **0.25% Pb:** No **Spare Parts Only:** No
**Approved:** 03-Jul-2003 **Renewed:** 03-Jul-2018 **Bypass:**
**Shutoffs:** (gg),ee,ff,hh,ll,mm,tt,uu,yy,zz,ppp,qqq,vvv,www,zzz,dddd,eeee,ssss,tttt,vvvv,wwww,yyyy,zzzz,kkkkk
**Notes:** Up to serial number L61205

---

**Type:** RP **Manufacturer:** Wilkins **Model:** 375MS
**Size:** 4 **Orientation:** H **Meters:**
**Manual:** 9 **0.25% Pb:** Yes **Spare Parts Only:** No
**Approved:** 09-Sep-2010 **Renewed:** 09-Sep-2016 **Bypass:**
**Shutoffs:** (gg),hh,ppp,qqq,vvv,www,,ssss,tttt,vvvv,wwww,yyyy,zzzz,kkkkk
**Notes:** Serial number L61205 and higher

---

**Type:** RP **Manufacturer:** Wilkins **Model:** 375MS
**Size:** 6 **Orientation:** H **Meters:**
**Manual:** 9 **0.25% Pb:** No **Spare Parts Only:** No
**Approved:** 03-Jul-2003 **Renewed:** 03-Jul-2018 **Bypass:**
**Shutoffs:** (gg),ee,ff,hh,ll,mm,tt,uu,yy,zz,ppp,qqq,vvv,www,zzz,dddd,eeee,ssss,tttt,vvvv,wwww,yyyy,zzzz,kkkkk
**Notes:** Up to serial number L61205

---

**Type:** RP **Manufacturer:** Wilkins **Model:** 375MS
**Size:** 6 **Orientation:** H **Meters:**
**Manual:** 9 **0.25% Pb:** Yes **Spare Parts Only:** No
**Approved:** 09-Sep-2010 **Renewed:** 09-Sep-2016 **Bypass:**
**Shutoffs:** (gg),hh,ppp,qqq,vvv,www,zzz,ssss,tttt,vvvv,wwww,yyyy,zzzz,kkkkk
**Notes:** Serial number L61205 and higher

**Type:** RP **Manufacturer:** Wilkins **Model:** 375MS
**Size:** 8 **Orientation:** H **Meters:**
**Manual:** 9 **0.25% Pb:** No **Spare Parts Only:** No
**Approved:** 03-Jul-2003 **Renewed:** 03-Jul-2018 **Bypass:**
**Shutoffs:** (gg),ee,ff,hh,ll,mm,tt,uu,yy,zz,ppp,qqq,vvv,www,zzz,dddd,eeee,ssss,tttt,vvvv,wwww,yyyy,zzzz,kkkkk
**Notes:** Up to serial number L61205

---

**Type:** RP **Manufacturer:** Wilkins **Model:** 375MS
**Size:** 8 **Orientation:** H **Meters:**
**Manual:** 9 **0.25% Pb:** Yes **Spare Parts Only:** No
**Approved:** 09-Sep-2010 **Renewed:** 09-Sep-2016 **Bypass:**
**Shutoffs:** (gg),hh,ppp,qqq,vvv,www,ssss,tttt,vvvv,wwww,yyyy,zzzz,kkkkk
**Notes:** Serial number L61205 and higher

---

**Type:** RP **Manufacturer:** Wilkins **Model:** 375MS
**Size:** 10 **Orientation:** H **Meters:**
**Manual:** 9 **0.25% Pb:** No **Spare Parts Only:** No
**Approved:** 29-Mar-2005 **Renewed:** 29-Mar-2017 **Bypass:**
**Shutoffs:** (gg),ee,ff,hh,ll,mm,tt,uu,yy,zz,ppp,qqq,vvv,www,zzz,dddd,eeee,ssss,tttt,vvvv,wwww,yyyy,zzzz,kkkkk
**Notes:** Up to serial number L61205

---

**Type:** RP **Manufacturer:** Wilkins **Model:** 375MS
**Size:** 10 **Orientation:** H **Meters:**
**Manual:** 9 **0.25% Pb:** Yes **Spare Parts Only:** No
**Approved:** 09-Sep-2010 **Renewed:** 09-Sep-2016 **Bypass:**
**Shutoffs:** (gg),hh,ppp,qqq,vvv,www,ssss,tttt,vvvv,wwww,yyyy,zzzz,kkkkk
**Notes:** Serial number L61205 and higher

---

**Type:** RP **Manufacturer:** Wilkins **Model:** 375ST
**Size:** 1/2 **Orientation:** H **Meters:**
**Manual:** 9 **0.25% Pb:** Yes **Spare Parts Only:** No
**Approved:** 22-Feb-2011 **Renewed:** 22-Feb-2017 **Bypass:**
**Shutoffs:** (int)

---

**Type:** RP **Manufacturer:** Wilkins **Model:** 375ST
**Size:** 3/4 **Orientation:** H **Meters:**
**Manual:** 9 **0.25% Pb:** Yes **Spare Parts Only:** No
**Approved:** 22-Feb-2011 **Renewed:** 22-Feb-2017 **Bypass:**
**Shutoffs:** (int)


2018 © University of Southern California

**Type:** RP
**Manufacturer:** Wilkins
**Model:** 375ST
**Size:** 1
**Orientation:** H
**Meters:**
**Manual:** 9
**0.25% Pb:** Yes
**Spare Parts Only:** No
**Approved:** 31-Oct-2011
**Renewed:** 31-Oct-2017
**Bypass:**
**Shutoffs:** int

---

**Type:** RP
**Manufacturer:** Wilkins
**Model:** 375XL
**Size:** 1/2
**Orientation:** H
**Meters:**
**Manual:** 9
**0.25% Pb:** Yes
**Spare Parts Only:** No
**Approved:** 07-Apr-2009
**Renewed:** 07-Apr-2018
**Bypass:**
**Shutoffs:** (int)
**Notes:** Testcocks: Female Threaded End or 45 degree male SAE flare

---

**Type:** RP
**Manufacturer:** Wilkins
**Model:** 375XL
**Size:** 3/4
**Orientation:** H
**Meters:**
**Manual:** 9
**0.25% Pb:** Yes
**Spare Parts Only:** No
**Approved:** 09-Mar-2007
**Renewed:** 09-Mar-2016
**Bypass:**
**Shutoffs:** (int)
**Notes:** Testcocks: Female Threaded End or 45 degree male SAE flare

---

**Type:** RP
**Manufacturer:** Wilkins
**Model:** 375XL
**Size:** 1
**Orientation:** H
**Meters:**
**Manual:** 9
**0.25% Pb:** Yes
**Spare Parts Only:** No
**Approved:** 09-Mar-2007
**Renewed:** 09-Mar-2016
**Bypass:**
**Shutoffs:** (int)
**Notes:** Testcocks: Female Threaded End or 45 degree male SAE flare

---

**Type:** RP
**Manufacturer:** Wilkins
**Model:** 375XL
**Size:** 1 1/4
**Orientation:** H
**Meters:**
**Manual:** 9
**0.25% Pb:** Yes
**Spare Parts Only:** No
**Approved:** 20-Apr-2010
**Renewed:** 20-Apr-2016
**Bypass:**
**Shutoffs:** (int)

---

**Type:** RP
**Manufacturer:** Wilkins
**Model:** 375XL
**Size:** 1 1/2
**Orientation:** H
**Meters:**
**Manual:** 9
**0.25% Pb:** Yes
**Spare Parts Only:** No
**Approved:** 20-Apr-2010
**Renewed:** 20-Apr-2016
**Bypass:**
**Shutoffs:** (int)

**Type:** RP **Manufacturer:** Wilkins **Model:** 375XL
**Size:** 2 **Orientation:** H **Meters:**
**Manual:** 9 **0.25% Pb:** Yes **Spare Parts Only:** No
**Approved:** 20-Apr-2010 **Renewed:** 20-Apr-2016 **Bypass:**
**Shutoffs:** (int)

---

**Type:** RP **Manufacturer:** Wilkins **Model:** 375XL
**Size:** 2 1/2 **Orientation:** H **Meters:**
**Manual:** 9 **0.25% Pb:** No **Spare Parts Only:** No
**Approved:** 14-Apr-2010 **Renewed:** 14-Apr-2016 **Bypass:**
**Shutoffs:** ee,ff,ll,mm,tt,uu,yy,zz,zzz,dddd

---

**Type:** RP **Manufacturer:** Wilkins **Model:** 375XL
**Size:** 2 1/2 **Orientation:** H **Meters:**
**Manual:** 9 **0.25% Pb:** Yes **Spare Parts Only:** No
**Approved:** 14-Apr-2010 **Renewed:** 14-Apr-2016 **Bypass:**
**Shutoffs:** (gg),hh,ppp,qqq,ssss,tttt,vvvv,wwww,yyyy,zzzz

---

**Type:** RP **Manufacturer:** Wilkins **Model:** 375XL
**Size:** 3 **Orientation:** H **Meters:**
**Manual:** 9 **0.25% Pb:** No **Spare Parts Only:** No
**Approved:** 14-Apr-2010 **Renewed:** 14-Apr-2016 **Bypass:**
**Shutoffs:** ee,ff,ll,mm,tt,uu,yy,zz,zzz,dddd

---

**Type:** RP **Manufacturer:** Wilkins **Model:** 375XL
**Size:** 3 **Orientation:** H **Meters:**
**Manual:** 9 **0.25% Pb:** Yes **Spare Parts Only:** No
**Approved:** 14-Apr-2010 **Renewed:** 14-Apr-2016 **Bypass:**
**Shutoffs:** (gg),hh,ppp,qqq,ssss,tttt,vvvv,wwww,yyyy,zzzz

---

**Type:** RP **Manufacturer:** Wilkins **Model:** 375XL
**Size:** 4 **Orientation:** H **Meters:**
**Manual:** 9 **0.25% Pb:** No **Spare Parts Only:** No
**Approved:** 14-Apr-2010 **Renewed:** 14-Apr-2016 **Bypass:**
**Shutoffs:** ee,ff,ll,mm,tt,uu,yy,zz,zzz,dddd,eeee

---

**Type:** RP **Manufacturer:** Wilkins **Model:** 375XL
**Size:** 4 **Orientation:** H **Meters:**
**Manual:** 9 **0.25% Pb:** Yes **Spare Parts Only:** No
**Approved:** 14-Apr-2010 **Renewed:** 14-Apr-2016 **Bypass:**
**Shutoffs:** (gg),hh,ppp,qqq,vvv,www,ssss,tttt,vvvv,wwww,yyyy,zzzz


2018 © University of Southern California

**Type:** RP **Manufacturer:** Wilkins **Model:** 375XL
**Size:** 6 **Orientation:** H **Meters:**
**Manual:** 9 **0.25% Pb:** No **Spare Parts Only:** No
**Approved:** 14-Apr-2010 **Renewed:** 14-Apr-2016 **Bypass:**
**Shutoffs:** ee,ff,ll,mm,tt,uu,yy,zz,zzz,dddd,eeee

---

**Type:** RP **Manufacturer:** Wilkins **Model:** 375XL
**Size:** 6 **Orientation:** H **Meters:**
**Manual:** 9 **0.25% Pb:** Yes **Spare Parts Only:** No
**Approved:** 14-Apr-2010 **Renewed:** 14-Apr-2016 **Bypass:**
**Shutoffs:** (gg),hh,ppp,qqq,vvv,www,ssss,tttt,vvvv,wwww,yyyy,zzzz

---

**Type:** RP **Manufacturer:** Wilkins **Model:** 375XL
**Size:** 8 **Orientation:** H **Meters:**
**Manual:** 9 **0.25% Pb:** No **Spare Parts Only:** No
**Approved:** 18-Feb-2010 **Renewed:** 18-Feb-2016 **Bypass:**
**Shutoffs:** ee,ff,ll,mm,tt,uu,yy,zz,zzz,dddd,eeee

---

**Type:** RP **Manufacturer:** Wilkins **Model:** 375XL
**Size:** 8 **Orientation:** H **Meters:**
**Manual:** 9 **0.25% Pb:** Yes **Spare Parts Only:** No
**Approved:** 18-Feb-2010 **Renewed:** 18-Feb-2016 **Bypass:**
**Shutoffs:** gg,hh,ppp,qqq,vvv,www,ssss,tttt,vvvv,wwww,yyyy,zzzz

---

**Type:** RP **Manufacturer:** Wilkins **Model:** 375XL
**Size:** 10 **Orientation:** H **Meters:**
**Manual:** 9 **0.25% Pb:** No **Spare Parts Only:** No
**Approved:** 18-Feb-2010 **Renewed:** 18-Feb-2016 **Bypass:**
**Shutoffs:** ee,ff,ll,mm,tt,uu,yy,zz,zzz,dddd,eeee

---

**Type:** RP **Manufacturer:** Wilkins **Model:** 375XL
**Size:** 10 **Orientation:** H **Meters:**
**Manual:** 9 **0.25% Pb:** Yes **Spare Parts Only:** No
**Approved:** 18-Feb-2010 **Renewed:** 18-Feb-2016 **Bypass:**
**Shutoffs:** gg,hh,ppp,qqq,vvv,www,ssss,tttt,vvvv,wwww,yyyy,zzzz

**Type:** RP
**Manufacturer:** Wilkins
**Model:** 375XLB
**Size:** 1/2
**Orientation:** H
**Meters:**
**Manual:** 9
**0.25% Pb:** Yes
**Spare Parts Only:** No
**Approved:** 08-Nov-2012
**Renewed:** 08-Nov-2015
**Bypass:**
**Shutoffs:** (int)
**Notes:** Testcocks: Female Threaded End or 45 degree male SAE flare

---

**Type:** RP
**Manufacturer:** Wilkins
**Model:** 375XLB
**Size:** 3/4
**Orientation:** H
**Meters:**
**Manual:** 9
**0.25% Pb:** Yes
**Spare Parts Only:** No
**Approved:** 08-Nov-2012
**Renewed:** 08-Nov-2015
**Bypass:**
**Shutoffs:** (int)
**Notes:** Testcocks: Female Threaded End or 45 degree male SAE flare

---

**Type:** RP
**Manufacturer:** Wilkins
**Model:** 375XLB
**Size:** 1
**Orientation:** H
**Meters:**
**Manual:** 9
**0.25% Pb:** Yes
**Spare Parts Only:** No
**Approved:** 08-Nov-2012
**Renewed:** 08-Nov-2015
**Bypass:**
**Shutoffs:** (int)
**Notes:** Testcocks: Female Threaded End or 45 degree male SAE flare

---

**Type:** RP
**Manufacturer:** Wilkins
**Model:** 375XLB
**Size:** 1 1/4
**Orientation:** H
**Meters:**
**Manual:** 9
**0.25% Pb:** Yes
**Spare Parts Only:** No
**Approved:** 08-Nov-2012
**Renewed:** 08-Nov-2015
**Bypass:**
**Shutoffs:** (int)

---

**Type:** RP
**Manufacturer:** Wilkins
**Model:** 375XLB
**Size:** 1 1/2
**Orientation:** H
**Meters:**
**Manual:** 9
**0.25% Pb:** Yes
**Spare Parts Only:** No
**Approved:** 08-Nov-2012
**Renewed:** 08-Nov-2015
**Bypass:**
**Shutoffs:** (int)

---

**Type:** RP
**Manufacturer:** Wilkins
**Model:** 375XLB
**Size:** 2
**Orientation:** H
**Meters:**
**Manual:** 9
**0.25% Pb:** Yes
**Spare Parts Only:** No
**Approved:** 08-Nov-2012
**Renewed:** 08-Nov-2015
**Bypass:**
**Shutoffs:** (int)


2018 © University of Southern California

**Type:** RP **Manufacturer:** Wilkins **Model:** 375XLMS
**Size:** 2 1/2 **Orientation:** H **Meters:**
**Manual:** 9 **0.25% Pb:** No **Spare Parts Only:** No
**Approved:** 14-Apr-2010 **Renewed:** 14-Apr-2016 **Bypass:**
**Shutoffs:** ee,ff,ll,mm,tt,uu,yy,zz,zzz,dddd

---

**Type:** RP **Manufacturer:** Wilkins **Model:** 375XLMS
**Size:** 2 1/2 **Orientation:** H **Meters:**
**Manual:** 9 **0.25% Pb:** Yes **Spare Parts Only:** No
**Approved:** 14-Apr-2010 **Renewed:** 14-Apr-2016 **Bypass:**
**Shutoffs:** (gg),hh,ppp,qqq,ssss,tttt,vvvv,wwww,yyyy,zzzz

---

**Type:** RP **Manufacturer:** Wilkins **Model:** 375XLMS
**Size:** 3 **Orientation:** H **Meters:**
**Manual:** 9 **0.25% Pb:** No **Spare Parts Only:** No
**Approved:** 14-Apr-2010 **Renewed:** 14-Apr-2016 **Bypass:**
**Shutoffs:** ee,ff,ll,mm,tt,uu,yy,zz,zzz,dddd

---

**Type:** RP **Manufacturer:** Wilkins **Model:** 375XLMS
**Size:** 3 **Orientation:** H **Meters:**
**Manual:** 9 **0.25% Pb:** Yes **Spare Parts Only:** No
**Approved:** 14-Apr-2010 **Renewed:** 14-Apr-2016 **Bypass:**
**Shutoffs:** (gg),hh,ppp,qqq,ssss,tttt,vvvv,wwww,yyyy,zzzz

---

**Type:** RP **Manufacturer:** Wilkins **Model:** 375XLMS
**Size:** 4 **Orientation:** H **Meters:**
**Manual:** 9 **0.25% Pb:** No **Spare Parts Only:** No
**Approved:** 14-Apr-2010 **Renewed:** 14-Apr-2016 **Bypass:**
**Shutoffs:** ee,ff,ll,mm,tt,uu,yy,zzzzz,dddd,eeee

---

**Type:** RP **Manufacturer:** Wilkins **Model:** 375XLMS
**Size:** 4 **Orientation:** H **Meters:**
**Manual:** 9 **0.25% Pb:** Yes **Spare Parts Only:** No
**Approved:** 14-Apr-2010 **Renewed:** 14-Apr-2016 **Bypass:**
**Shutoffs:** (gg),hh,ppp,qqq,vvv,www,,ssss,tttt,vvvv,wwww,yyyy,zzzz

---

**Type:** RP **Manufacturer:** Wilkins **Model:** 375XLMS
**Size:** 6 **Orientation:** H **Meters:**
**Manual:** 9 **0.25% Pb:** No **Spare Parts Only:** No
**Approved:** 14-Apr-2010 **Renewed:** 14-Apr-2016 **Bypass:**
**Shutoffs:** ee,ff,ll,mm,tt,uu,yy,zz,dddd,eeee

**Type:** RP **Manufacturer:** Wilkins **Model:** 375XLMS
**Size:** 6 **Orientation:** H **Meters:**
**Manual:** 9 **0.25% Pb:** Yes **Spare Parts Only:** No
**Approved:** 14-Apr-2010 **Renewed:** 14-Apr-2016 **Bypass:**
**Shutoffs:** (gg),hh,ppp,qqq,vvv,www,zzz,ssss,tttt,vvvv,wwww,yyyy,zzzz

---

**Type:** RP **Manufacturer:** Wilkins **Model:** 375XLMS
**Size:** 8 **Orientation:** H **Meters:**
**Manual:** 9 **0.25% Pb:** No **Spare Parts Only:** No
**Approved:** 18-Feb-2010 **Renewed:** 18-Feb-2016 **Bypass:**
**Shutoffs:** ee,ff,ll,mm,tt,uu,yy,zz,zzz,dddd,eeee

---

**Type:** RP **Manufacturer:** Wilkins **Model:** 375XLMS
**Size:** 8 **Orientation:** H **Meters:**
**Manual:** 9 **0.25% Pb:** Yes **Spare Parts Only:** No
**Approved:** 18-Feb-2010 **Renewed:** 18-Feb-2016 **Bypass:**
**Shutoffs:** gg,hh,ppp,qqq,vvv,www,ssss,tttt,vvvv,wwww,yyyy,zzzz

---

**Type:** RP **Manufacturer:** Wilkins **Model:** 375XLMS
**Size:** 10 **Orientation:** H **Meters:**
**Manual:** 9 **0.25% Pb:** No **Spare Parts Only:** No
**Approved:** 18-Feb-2010 **Renewed:** 18-Feb-2016 **Bypass:**
**Shutoffs:** ee,ff,ll,mm,tt,uu,yy,zz,zzz,dddd,eeee

---

**Type:** RP **Manufacturer:** Wilkins **Model:** 375XLMS
**Size:** 10 **Orientation:** H **Meters:**
**Manual:** 9 **0.25% Pb:** Yes **Spare Parts Only:** No
**Approved:** 18-Feb-2010 **Renewed:** 18-Feb-2016 **Bypass:**
**Shutoffs:** gg,hh,ppp,qqq,vvv,www,ssss,tttt,vvvv,wwww,yyyy,zzzz

---

**Type:** RP **Manufacturer:** Wilkins **Model:** 475
**Size:** 2 1/2 **Orientation:** VUVD **Meters:**
**Manual:** 9 **0.25% Pb:** No **Spare Parts Only:** No
**Approved:** 24-Jan-2002 **Renewed:** 24-Jan-2017 **Bypass:**
**Shutoffs:**
(gg),ee,ff,hh,ll,mm,tt,uu,yy,zz,ppp,qqq,zzz,dddd,ssss,tttt,vvvv,wwww,yyyy,zzzz,kkkkk,gggggg,hhhhhh,jjjjjj,kkkkkk,mmmmmm,nnnnnn
**Notes:** Up to serial number Q05664


2018 © University of Southern California

**Type:** RP **Manufacturer:** Wilkins **Model:** 475
**Size:** 2 1/2 **Orientation:** VUVD **Meters:**
**Manual:** 9 **0.25% Pb:** Yes **Spare Parts Only:** No
**Approved:** 09-Sep-2010 **Renewed:** 09-Sep-2016 **Bypass:**
**Shutoffs:** (gg),hh,ppp,qqq,ssss,tttt,vvvv,wwww,yyyy,zzzz,kkkkk,gggggg,hhhhhh,jjjjjj,kkkkkk,mmmmmm,nnnnnn
**Notes:** Serial number Q05664 and higher

---

**Type:** RP **Manufacturer:** Wilkins **Model:** 475
**Size:** 3 **Orientation:** VUVD **Meters:**
**Manual:** 9 **0.25% Pb:** No **Spare Parts Only:** No
**Approved:** 24-Jan-2002 **Renewed:** 24-Jan-2017 **Bypass:**
**Shutoffs:**
(gg),ee,ff,hh,ll,mm,tt,uu,yy,zz,ppp,qqq,zzz,dddd,ssss,tttt,vvvv,wwww,yyyy,zzzz,kkkkk,gggggg,hhhhhh,jjjjjj,kkkkkk,mmmmmm,nnnnnn
**Notes:** Up to serial number Q05664

---

**Type:** RP **Manufacturer:** Wilkins **Model:** 475
**Size:** 3 **Orientation:** VUVD **Meters:**
**Manual:** 9 **0.25% Pb:** Yes **Spare Parts Only:** No
**Approved:** 09-Sep-2010 **Renewed:** 09-Sep-2016 **Bypass:**
**Shutoffs:** (gg),hh,ppp,qqq,ssss,tttt,vvvv,wwww,yyyy,zzzz,kkkkk,gggggg,hhhhhh,jjjjjj,kkkkkk,mmmmmm,nnnnnn
**Notes:** Serial number Q05664 and higher

---

**Type:** RP **Manufacturer:** Wilkins **Model:** 475
**Size:** 4 **Orientation:** VUVD **Meters:**
**Manual:** 9 **0.25% Pb:** No **Spare Parts Only:** No
**Approved:** 27-Jul-2000 **Renewed:** 27-Jul-2018 **Bypass:**
**Shutoffs:**
(ppp),qqq,sss,ttt,www,yyy,zzz,dddd,eeee,ssss,uuuu,vvvv,xxxx,yyyy,aaaaa,kkkkk,lllll,gggggg,iiiiii,jjjjjj,llllll,mmmmmm,oooooo
**Notes:** Up to serial number Q05664

---

**Type:** RP **Manufacturer:** Wilkins **Model:** 475
**Size:** 4 **Orientation:** VUVD **Meters:**
**Manual:** 9 **0.25% Pb:** Yes **Spare Parts Only:** No
**Approved:** 09-Sep-2010 **Renewed:** 09-Sep-2016 **Bypass:**
**Shutoffs:** (ppp),qqq,sss,ttt,www,yyy,ssss,uuuu,vvvv,xxxx,yyyy,aaaaa,kkkkk,lllll,gggggg,iiiiii,jjjjjj,llllll,mmmmmm,oooooo
**Notes:** Serial number Q05664 and higher

**Type:** RP **Manufacturer:** Wilkins **Model:** 475
**Size:** 6 **Orientation:** VUVD **Meters:**
**Manual:** 9 **0.25% Pb:** No **Spare Parts Only:** No
**Approved:** 27-Jul-2000 **Renewed:** 27-Jul-2018 **Bypass:**
**Shutoffs:**
(ppp),qqq,sss,ttt,www,yyy,zzz,dddd,eeee,ssss,uuuu,vvvv,xxxx,yyyy,aaaaa,kkkkk,lllll,gggggg,iiiiii,jjjjjj,llllll,mmmmmm,oooooo
**Notes:** Up to serial number Q05664

---

**Type:** RP **Manufacturer:** Wilkins **Model:** 475
**Size:** 6 **Orientation:** VUVD **Meters:**
**Manual:** 9 **0.25% Pb:** Yes **Spare Parts Only:** No
**Approved:** 09-Sep-2010 **Renewed:** 09-Sep-2016 **Bypass:**
**Shutoffs:** (ppp),qqq,sss,ttt,www,yyy,ssss,uuuu,vvvv,xxxx,yyyy,aaaaa,kkkkk,lllll,gggggg,iiiiii,jjjjjj,llllll,mmmmmm,oooooo
**Notes:** Serial number Q05664 and higher

---

**Type:** RP **Manufacturer:** Wilkins **Model:** 475
**Size:** 8 **Orientation:** VUVD **Meters:**
**Manual:** 9 **0.25% Pb:** No **Spare Parts Only:** No
**Approved:** 03-Jul-2003 **Renewed:** 03-Jul-2018 **Bypass:**
**Shutoffs:**
(ppp),qqq,sss,ttt,www,yyy,zzz,dddd,eeee,ssss,uuuu,vvvv,xxxx,yyyy,aaaaa,kkkkk,lllll,gggggg,iiiiii,jjjjjj,llllll,mmmmmm,oooooo
**Notes:** Up to serial number Q05664

---

**Type:** RP **Manufacturer:** Wilkins **Model:** 475
**Size:** 8 **Orientation:** VUVD **Meters:**
**Manual:** 9 **0.25% Pb:** Yes **Spare Parts Only:** No
**Approved:** 09-Sep-2010 **Renewed:** 09-Sep-2016 **Bypass:**
**Shutoffs:** (ppp),qqq,sss,ttt,www,yyy,ssss,uuuu,vvvv,xxxx,yyyy,aaaaa,kkkkk,lllll,gggggg,iiiiii,jjjjjj,llllll,mmmmmm,oooooo
**Notes:** Serial number Q05664 and higher

---

**Type:** RP **Manufacturer:** Wilkins **Model:** 475
**Size:** 10 **Orientation:** VUVD **Meters:**
**Manual:** 9 **0.25% Pb:** No **Spare Parts Only:** No
**Approved:** 22-Nov-2004 **Renewed:** 22-Nov-2016 **Bypass:**
**Shutoffs:**
(ppp),qqq,sss,ttt,www,zzz,dddd,eeee,ssss,uuuu,vvvv,xxxx,yyyy,aaaaa,kkkkk,lllll,gggggg,iiiiii,jjjjjj,llllll,mmmmmm,oooooo
**Notes:** Up to serial number Q05664


2018 © University of Southern California

**Type:** RP **Manufacturer:** Wilkins **Model:** 475
**Size:** 10 **Orientation:** VUVD **Meters:**
**Manual:** 9 **0.25% Pb:** Yes **Spare Parts Only:** No
**Approved:** 09-Sep-2010 **Renewed:** 09-Sep-2016 **Bypass:**
**Shutoffs:** (ppp),qqq,sss,ttt,www,ssss,uuuu,vvvv,xxxx,yyyy,aaaaa,kkkkk,lllll,gggggg,iiiiii,jjjjjj,llllll,mmmmmm,oooooo
**Notes:** Serial number Q05664 and higher

---

**Type:** RP **Manufacturer:** Wilkins **Model:** 475MS
**Size:** 2 1/2 **Orientation:** VUVD **Meters:**
**Manual:** 9 **0.25% Pb:** No **Spare Parts Only:** No
**Approved:** 03-Jul-2003 **Renewed:** 03-Jul-2018 **Bypass:**
**Shutoffs:** (gg),ee,ff,hh,ll,mm,tt,uu,yy,zz,ppp,qqq,zzz,dddd,ssss,uuuu,vvvv,xxxx,yyyy,aaaaa,kkkkk
**Notes:** Up to serial number Q05664

---

**Type:** RP **Manufacturer:** Wilkins **Model:** 475MS
**Size:** 2 1/2 **Orientation:** VUVD **Meters:**
**Manual:** 9 **0.25% Pb:** Yes **Spare Parts Only:** No
**Approved:** 09-Sep-2010 **Renewed:** 09-Sep-2016 **Bypass:**
**Shutoffs:** (gg),hh,ppp,qqq,ssss,uuuu,vvvv,xxxx,yyyy,aaaaa,kkkkk
**Notes:** Serial number Q05664 and higher

---

**Type:** RP **Manufacturer:** Wilkins **Model:** 475MS
**Size:** 3 **Orientation:** VUVD **Meters:**
**Manual:** 9 **0.25% Pb:** No **Spare Parts Only:** No
**Approved:** 03-Jul-2003 **Renewed:** 03-Jul-2018 **Bypass:**
**Shutoffs:** (gg),ee,ff,hh,ll,mm,tt,uu,yy,zz,ppp,qqq,zzz,dddd,ssss,uuuu,vvvv,xxxx,yyyy,aaaaa,kkkkk,lllll
**Notes:** Up to serial number Q05664

---

**Type:** RP **Manufacturer:** Wilkins **Model:** 475MS
**Size:** 3 **Orientation:** VUVD **Meters:**
**Manual:** 9 **0.25% Pb:** Yes **Spare Parts Only:** No
**Approved:** 09-Sep-2010 **Renewed:** 09-Sep-2016 **Bypass:**
**Shutoffs:** (gg),hh,ppp,qqq,ssss,uuuu,vvvv,xxxx,yyyy,aaaaa,kkkkk,lllll
**Notes:** Serial number Q05664 and higher

---

**Type:** RP **Manufacturer:** Wilkins **Model:** 475MS
**Size:** 4 **Orientation:** VUVD **Meters:**
**Manual:** 9 **0.25% Pb:** No **Spare Parts Only:** No
**Approved:** 03-Jul-2003 **Renewed:** 03-Jul-2018 **Bypass:**
**Shutoffs:** (ppp),qqq,sss,ttt,www,yyy,zzz,dddd,eeee,ssss,uuuu,vvvv,xxxx,yyyy,aaaaa,kkkkk,lllll
**Notes:** Up to serial number Q05664

**Type:** RP **Manufacturer:** Wilkins **Model:** 475MS
**Size:** 4 **Orientation:** VUVD **Meters:**
**Manual:** 9 **0.25% Pb:** Yes **Spare Parts Only:** No
**Approved:** 09-Sep-2010 **Renewed:** 09-Sep-2016 **Bypass:**
**Shutoffs:** (ppp),qqq,sss,ttt,www,yyy,ssss,uuuu,vvvv,xxxx,yyyy,aaaaa,kkkkk,lllll
**Notes:** Serial number Q05664 and higher

---

**Type:** RP **Manufacturer:** Wilkins **Model:** 475MS
**Size:** 6 **Orientation:** VUVD **Meters:**
**Manual:** 9 **0.25% Pb:** No **Spare Parts Only:** No
**Approved:** 03-Jul-2003 **Renewed:** 03-Jul-2018 **Bypass:**
**Shutoffs:** (ppp),qqq,sss,ttt,www,yyy,zzz,dddd,eeee,ssss,uuuu,vvvv,xxxx,yyyy,aaaaa,kkkkk,lllll
**Notes:** Up to serial number Q05664

---

**Type:** RP **Manufacturer:** Wilkins **Model:** 475MS
**Size:** 6 **Orientation:** VUVD **Meters:**
**Manual:** 9 **0.25% Pb:** Yes **Spare Parts Only:** No
**Approved:** 09-Sep-2010 **Renewed:** 09-Sep-2016 **Bypass:**
**Shutoffs:** (ppp),qqq,sss,ttt,www,yyy,ssss,uuuu,vvvv,xxxx,yyyy,aaaaa,kkkkk,lllll
**Notes:** Serial number Q05664 and higher

---

**Type:** RP **Manufacturer:** Wilkins **Model:** 475MS
**Size:** 8 **Orientation:** VUVD **Meters:**
**Manual:** 9 **0.25% Pb:** No **Spare Parts Only:** No
**Approved:** 03-Jul-2003 **Renewed:** 03-Jul-2018 **Bypass:**
**Shutoffs:** (ppp),qqq,sss,ttt,www,yyy,zzz,dddd,eeee,ssss,uuuu,vvvv,xxxx,yyyy,aaaaa,kkkkk,lllll
**Notes:** Up to serial number Q05664

---

**Type:** RP **Manufacturer:** Wilkins **Model:** 475MS
**Size:** 8 **Orientation:** VUVD **Meters:**
**Manual:** 9 **0.25% Pb:** Yes **Spare Parts Only:** No
**Approved:** 09-Sep-2010 **Renewed:** 09-Sep-2016 **Bypass:**
**Shutoffs:** (ppp),qqq,sss,ttt,www,yyy,ssss,uuuu,vvvv,xxxx,yyyy,aaaaa,kkkkk,lllll
**Notes:** Serial number Q05664 and higher

---

**Type:** RP **Manufacturer:** Wilkins **Model:** 475MS
**Size:** 10 **Orientation:** H **Meters:**
**Manual:** 9 **0.25% Pb:** No **Spare Parts Only:** No
**Approved:** 29-Mar-2005 **Renewed:** 29-Mar-2017 **Bypass:**
**Shutoffs:** (ppp),qqq,sss,ttt,www,zzz,dddd,eeee,ssss,uuuu,vvvv,xxxx,yyyy,aaaaa,kkkkk,lllll
**Notes:** Up to serial number Q05664


2018 © University of Southern California

**Type:** RP **Manufacturer:** Wilkins **Model:** 475MS
**Size:** 10 **Orientation:** H **Meters:**
**Manual:** 9 **0.25% Pb:** Yes **Spare Parts Only:** No
**Approved:** 09-Sep-2010 **Renewed:** 09-Sep-2016 **Bypass:**
**Shutoffs:** (ppp),qqq,sss,ttt,www,ssss,uuuu,vvvv,xxxx,yyyy,aaaaa,kkkkk,lllll
**Notes:** Serial number Q05664 and higher

---

**Type:** RP **Manufacturer:** Wilkins **Model:** 475V
**Size:** 2 1/2 **Orientation:** VUVU **Meters:**
**Manual:** 9 **0.25% Pb:** No **Spare Parts Only:** No
**Approved:** 24-Jan-2002 **Renewed:** 24-Jan-2017 **Bypass:**
**Shutoffs:**
(gg),ee,ff,hh,ll,mm,tt,uu,yy,zz,ppp,qqq,zzz,dddd,ssss,tttt,vvvv,wwww,yyyy,zzzz,kkkkk,gggggg,hhhhhh,jjjjjj,kkkkkk,mmmmmm,nnnnnn
**Notes:** Up to serial number Q05664

---

**Type:** RP **Manufacturer:** Wilkins **Model:** 475V
**Size:** 2 1/2 **Orientation:** VUVU **Meters:**
**Manual:** 9 **0.25% Pb:** Yes **Spare Parts Only:** No
**Approved:** 09-Sep-2010 **Renewed:** 09-Sep-2016 **Bypass:**
**Shutoffs:** (gg),hh,ppp,qqq,ssss,tttt,vvvv,wwww,yyyy,zzzz,kkkkk,gggggg,hhhhhh,jjjjjj,kkkkkk,mmmmmm,nnnnnn
**Notes:** Serial number Q05664 and higher

---

**Type:** RP **Manufacturer:** Wilkins **Model:** 475V
**Size:** 3 **Orientation:** VUVU **Meters:**
**Manual:** 9 **0.25% Pb:** No **Spare Parts Only:** No
**Approved:** 24-Jan-2002 **Renewed:** 24-Jan-2017 **Bypass:**
**Shutoffs:**
(gg),ee,ff,hh,ll,mm,tt,uu,yy,zz,ppp,qqq,zzz,dddd,ssss,tttt,vvvv,wwww,yyyy,zzzz,kkkkk,gggggg,hhhhhh,jjjjjj,kkkkkk,mmmmmm,nnnnnn,lllll
**Notes:** Up to serial number Q05664

---

**Type:** RP **Manufacturer:** Wilkins **Model:** 475V
**Size:** 3 **Orientation:** VUVU **Meters:**
**Manual:** 9 **0.25% Pb:** Yes **Spare Parts Only:** No
**Approved:** 09-Sep-2010 **Renewed:** 09-Sep-2016 **Bypass:**
**Shutoffs:** (gg),hh,ppp,qqq,ssss,tttt,vvvv,wwww,yyyy,zzzz,kkkkk,gggggg,hhhhhh,jjjjjj,kkkkkk,mmmmmm,nnnnnn,lllll
**Notes:** Serial number Q05664 and higher

**Type:** RP **Manufacturer:** Wilkins **Model:** 475V
**Size:** 4 **Orientation:** VUVU **Meters:**
**Manual:** 9 **0.25% Pb:** No **Spare Parts Only:** No
**Approved:** 09-Sep-2000 **Renewed:** 09-Sep-2018 **Bypass:**
**Shutoffs:**
(ppp),qqq,sss,ttt,www,yyy,zzz,dddd,eeee,ssss,uuuu,vvvv,xxxx,yyyy,aaaaa,kkkkk,lllll,gggggg,iiiiii,jjjjjj,llllll,mmmmmm,oooooo
**Notes:** Up to serial number Q05664

---

**Type:** RP **Manufacturer:** Wilkins **Model:** 475V
**Size:** 4 **Orientation:** VUVU **Meters:**
**Manual:** 9 **0.25% Pb:** Yes **Spare Parts Only:** No
**Approved:** 09-Sep-2010 **Renewed:** 09-Sep-2016 **Bypass:**
**Shutoffs:** (ppp),qqq,sss,ttt,www,yyy,ssss,uuuu,vvvv,xxxx,yyyy,aaaaa,kkkkk,lllll,gggggg,iiiiii,jjjjjj,llllll,mmmmmm,oooooo
**Notes:** Serial number Q05664 and higher

---

**Type:** RP **Manufacturer:** Wilkins **Model:** 475V
**Size:** 6 **Orientation:** VUVU **Meters:**
**Manual:** 9 **0.25% Pb:** No **Spare Parts Only:** No
**Approved:** 31-May-2001 **Renewed:** 31-May-2016 **Bypass:**
**Shutoffs:**
(ppp),qqq,sss,ttt,www,yyy,zzz,dddd,eeee,ssss,uuuu,vvvv,xxxx,yyyy,aaaaa,kkkkk,lllll,gggggg,iiiiii,jjjjjj,llllll,mmmmmm,oooooo
**Notes:** Up to serial number Q05664

---

**Type:** RP **Manufacturer:** Wilkins **Model:** 475V
**Size:** 6 **Orientation:** VUVU **Meters:**
**Manual:** 9 **0.25% Pb:** Yes **Spare Parts Only:** No
**Approved:** 09-Sep-2010 **Renewed:** 09-Sep-2016 **Bypass:**
**Shutoffs:** (ppp),qqq,sss,ttt,www,yyy,ssss,uuuu,vvvv,xxxx,yyyy,aaaaa,kkkkk,lllll,gggggg,iiiiii,jjjjjj,llllll,mmmmmm,oooooo
**Notes:** Serial number Q05664 and higher

---

**Type:** RP **Manufacturer:** Wilkins **Model:** 475V
**Size:** 8 **Orientation:** VUVU **Meters:**
**Manual:** 9 **0.25% Pb:** No **Spare Parts Only:** No
**Approved:** 08-Jun-2004 **Renewed:** 08-Jun-2016 **Bypass:**
**Shutoffs:**
(ppp),qqq,sss,ttt,www,yyy,zzz,dddd,eeee,ssss,uuuu,vvvv,xxxx,yyyy,aaaaakkkkk,lllll,gggggg,iiiiii,jjjjjj,llllll,mmmmmm,oooooo
**Notes:** Up to serial number Q05664


2018 © University of Southern California

**Type:** RP **Manufacturer:** Wilkins **Model:** 475V
**Size:** 8 **Orientation:** VUVU **Meters:**
**Manual:** 9 **0.25% Pb:** Yes **Spare Parts Only:** No
**Approved:** 09-Sep-2010 **Renewed:** 09-Sep-2016 **Bypass:**
**Shutoffs:** (ppp),qqq,sss,ttt,www,yyy,ssss,uuuu,vvvv,xxxx,yyyy,aaaaa,kkkkk,lllll,gggggg,iiiiii,jjjjjj,llllll,mmmmmm,oooooo
**Notes:** Serial number Q05664 and higher

---

**Type:** RP **Manufacturer:** Wilkins **Model:** 475V
**Size:** 10 **Orientation:** VUVU **Meters:**
**Manual:** 9 **0.25% Pb:** No **Spare Parts Only:** No
**Approved:** 22-Nov-2004 **Renewed:** 22-Nov-2016 **Bypass:**
**Shutoffs:**
(ppp),qqq,sss,ttt,www,zzz,dddd,eeee,ssss,uuuu,vvvv,xxxx,yyyy,aaaaa,kkkkk,lllll,gggggg,iiiiii,jjjjjj,llllll,mmmmmm,oooooo
**Notes:** Up to serial number Q05664

---

**Type:** RP **Manufacturer:** Wilkins **Model:** 475V
**Size:** 10 **Orientation:** VUVU **Meters:**
**Manual:** 9 **0.25% Pb:** Yes **Spare Parts Only:** No
**Approved:** 09-Sep-2010 **Renewed:** 09-Sep-2016 **Bypass:**
**Shutoffs:** (ppp),qqq,sss,ttt,www,ssss,uuuu,vvvv,xxxx,yyyy,aaaaa,kkkkk,lllll,gggggg,iiiiii,jjjjjj,llllll,mmmmmm,oooooo
**Notes:** Serial number Q05664 and higher

---

**Type:** RP **Manufacturer:** Wilkins **Model:** 475VMS
**Size:** 2 1/2 **Orientation:** VUVU **Meters:**
**Manual:** 9 **0.25% Pb:** No **Spare Parts Only:** No
**Approved:** 03-Jul-2003 **Renewed:** 03-Jul-2018 **Bypass:**
**Shutoffs:** (gg),ee,ff,hh,ll,mm,tt,uu,yy,zz,ppp,qqq,zzz,dddd,ssss,uuuu,vvvv,xxxx,yyyy,aaaaa,kkkkk
**Notes:** Up to serial number Q05664

---

**Type:** RP **Manufacturer:** Wilkins **Model:** 475VMS
**Size:** 2 1/2 **Orientation:** VUVU **Meters:**
**Manual:** 9 **0.25% Pb:** Yes **Spare Parts Only:** No
**Approved:** 09-Sep-2010 **Renewed:** 09-Sep-2016 **Bypass:**
**Shutoffs:** (gg),hh,ppp,qqq,ssss,uuuu,vvvv,xxxx,yyyy,aaaaa,kkkkk
**Notes:** Serial number Q05664 and higher

**Type:** RP **Manufacturer:** Wilkins **Model:** 475VMS
**Size:** 3 **Orientation:** VUVU **Meters:**
**Manual:** 9 **0.25% Pb:** No **Spare Parts Only:** No
**Approved:** 03-Jul-2003 **Renewed:** 03-Jul-2018 **Bypass:**
**Shutoffs:** (gg),ee,ff,hh,ll,mm,tt,uu,yy,zz,ppp,qqq,zzz,dddd,ssss,uuuu,vvvv,xxxx,yyyy,aaaaa,kkkkk,lllll
**Notes:** Up to serial number Q05664

**Type:** RP **Manufacturer:** Wilkins **Model:** 475VMS
**Size:** 3 **Orientation:** VUVU **Meters:**
**Manual:** 9 **0.25% Pb:** Yes **Spare Parts Only:** No
**Approved:** 09-Sep-2010 **Renewed:** 09-Sep-2016 **Bypass:**
**Shutoffs:** (gg),hh,ppp,qqq,ssss,uuuu,vvvv,xxxx,yyyy,aaaaa,kkkkk,lllll
**Notes:** Serial number Q05664 and higher

---

**Type:** RP **Manufacturer:** Wilkins **Model:** 475VMS
**Size:** 4 **Orientation:** VUVU **Meters:**
**Manual:** 9 **0.25% Pb:** No **Spare Parts Only:** No
**Approved:** 03-Jul-2003 **Renewed:** 03-Jul-2018 **Bypass:**
**Shutoffs:** (ppp),qqq,sss,ttt,www,yyy,zzz,dddd,eeee,ssss,uuuu,vvvv,xxxx,yyyy,aaaaa,kkkkk,lllll
**Notes:** Up to serial number Q05664

---

**Type:** RP **Manufacturer:** Wilkins **Model:** 475VMS
**Size:** 4 **Orientation:** VUVU **Meters:**
**Manual:** 9 **0.25% Pb:** Yes **Spare Parts Only:** No
**Approved:** 09-Sep-2010 **Renewed:** 09-Sep-2016 **Bypass:**
**Shutoffs:** (ppp),qqq,sss,ttt,www,yyy,ssss,uuuu,vvvv,xxxx,yyyy,aaaaa,kkkkk,lllll
**Notes:** Serial number Q05664 and higher

---

**Type:** RP **Manufacturer:** Wilkins **Model:** 475VMS
**Size:** 6 **Orientation:** VUVU **Meters:**
**Manual:** 9 **0.25% Pb:** No **Spare Parts Only:** No
**Approved:** 03-Jul-2003 **Renewed:** 03-Jul-2018 **Bypass:**
**Shutoffs:** (ppp),qqq,sss,ttt,www,yyy,zzz,dddd,eeee,ssss,uuuu,vvvv,xxxx,yyyy,aaaaa,kkkkk,lllll
**Notes:** Up to serial number Q05664

---

**Type:** RP **Manufacturer:** Wilkins **Model:** 475VMS
**Size:** 6 **Orientation:** VUVU **Meters:**
**Manual:** 9 **0.25% Pb:** Yes **Spare Parts Only:** No
**Approved:** 09-Sep-2010 **Renewed:** 09-Sep-2016 **Bypass:**
**Shutoffs:** (ppp),qqq,sss,ttt,www,yyy,ssss,uuuu,vvvv,xxxx,yyyy,aaaaa,kkkkk,lllll
**Notes:** Serial number Q05664 and higher

---

**Type:** RP **Manufacturer:** Wilkins **Model:** 475VMS
**Size:** 8 **Orientation:** VUVU **Meters:**
**Manual:** 9 **0.25% Pb:** No **Spare Parts Only:** No
**Approved:** 03-Jul-2003 **Renewed:** 03-Jul-2018 **Bypass:**
**Shutoffs:** (ppp),qqq,sss,ttt,www,yyy,zzz,dddd,eeee,ssss,uuuu,vvvv,xxxx,yyyy,aaaaa,kkkkk,lllll
**Notes:** Up to serial number Q05664


2018 © University of Southern California

**Type:** RP **Manufacturer:** Wilkins **Model:** 475VMS
**Size:** 8 **Orientation:** VUVU **Meters:**
**Manual:** 9 **0.25% Pb:** Yes **Spare Parts Only:** No
**Approved:** 09-Sep-2010 **Renewed:** 09-Sep-2016 **Bypass:**
**Shutoffs:** (ppp),qqq,sss,ttt,www,yyy,ssss,uuuu,vvvv,xxxx,yyyy,aaaaa,kkkkk,lllll
**Notes:** Serial number Q05664 and higher

---

**Type:** RP **Manufacturer:** Wilkins **Model:** 475VMS
**Size:** 10 **Orientation:** H **Meters:**
**Manual:** 9 **0.25% Pb:** No **Spare Parts Only:** No
**Approved:** 29-Mar-2005 **Renewed:** 29-Mar-2017 **Bypass:**
**Shutoffs:** (ppp),qqq,sss,ttt,www,zzz,dddd,eeee,ssss,uuuu,vvvv,xxxx,yyyy,aaaaa,kkkkk,lllll
**Notes:** Up to serial number Q05664

---

**Type:** RP **Manufacturer:** Wilkins **Model:** 475VMS
**Size:** 10 **Orientation:** H **Meters:**
**Manual:** 9 **0.25% Pb:** Yes **Spare Parts Only:** No
**Approved:** 09-Sep-2010 **Renewed:** 09-Sep-2016 **Bypass:**
**Shutoffs:** (ppp),qqq,sss,ttt,www,ssss,uuuu,vvvv,xxxx,yyyy,aaaaa,kkkkk,lllll
**Notes:** Serial number Q05664 and higher

---

**Type:** RP **Manufacturer:** Wilkins **Model:** 475XL
**Size:** 2 1/2 **Orientation:** VUVD **Meters:**
**Manual:** 9 **0.25% Pb:** No **Spare Parts Only:** No
**Approved:** 14-Apr-2010 **Renewed:** 14-Apr-2016 **Bypass:**
**Shutoffs:** ee,ff,ll,mm,tt,uu,yy,zz,zzz,dddd

---

**Type:** RP **Manufacturer:** Wilkins **Model:** 475XL
**Size:** 2 1/2 **Orientation:** VUVD **Meters:**
**Manual:** 9 **0.25% Pb:** Yes **Spare Parts Only:** No
**Approved:** 14-Apr-2010 **Renewed:** 14-Apr-2016 **Bypass:**
**Shutoffs:** (gg),hh,ppp,qqq,ssss,uuuu,vvvv,xxxx,yyyy,aaaaa

---

**Type:** RP **Manufacturer:** Wilkins **Model:** 475XL
**Size:** 3 **Orientation:** VUVD **Meters:**
**Manual:** 9 **0.25% Pb:** No **Spare Parts Only:** No
**Approved:** 14-Apr-2010 **Renewed:** 14-Apr-2016 **Bypass:**
**Shutoffs:** ee,ff,ll,mm,tt,uu,yy,zz,zzz,dddd

**Type:** RP **Manufacturer:** Wilkins **Model:** 475XL
**Size:** 3 **Orientation:** VUVD **Meters:**
**Manual:** 9 **0.25% Pb:** Yes **Spare Parts Only:** No
**Approved:** 14-Apr-2010 **Renewed:** 14-Apr-2016 **Bypass:**
**Shutoffs:** (gg),hh,ppp,qqq,ssss,uuuu,vvvv,xxxx,yyyy,aaaaa

---

**Type:** RP **Manufacturer:** Wilkins **Model:** 475XL
**Size:** 4 **Orientation:** VUVD **Meters:**
**Manual:** 9 **0.25% Pb:** No **Spare Parts Only:** No
**Approved:** 14-Apr-2010 **Renewed:** 14-Apr-2016 **Bypass:**
**Shutoffs:** zzz,dddd,eeee

---

**Type:** RP **Manufacturer:** Wilkins **Model:** 475XL
**Size:** 4 **Orientation:** VUVD **Meters:**
**Manual:** 9 **0.25% Pb:** Yes **Spare Parts Only:** No
**Approved:** 14-Apr-2010 **Renewed:** 14-Apr-2016 **Bypass:**
**Shutoffs:** (ppp),qqq,sss,ttt,www,yyy,ssss,uuuu,vvvv,xxxx,yyyy,aaaaa

---

**Type:** RP **Manufacturer:** Wilkins **Model:** 475XL
**Size:** 6 **Orientation:** VUVD **Meters:**
**Manual:** 9 **0.25% Pb:** No **Spare Parts Only:** No
**Approved:** 14-Apr-2010 **Renewed:** 14-Apr-2016 **Bypass:**
**Shutoffs:** zzz,dddd,eeee

---

**Type:** RP **Manufacturer:** Wilkins **Model:** 475XL
**Size:** 6 **Orientation:** VUVD **Meters:**
**Manual:** 9 **0.25% Pb:** Yes **Spare Parts Only:** No
**Approved:** 14-Apr-2010 **Renewed:** 14-Apr-2016 **Bypass:**
**Shutoffs:** (ppp),qqq,sss,ttt,www,yyy,ssss,uuuu,vvvv,xxxx,yyyy,aaaaa

---

**Type:** RP **Manufacturer:** Wilkins **Model:** 475XL
**Size:** 8 **Orientation:** VUVD **Meters:**
**Manual:** 9 **0.25% Pb:** No **Spare Parts Only:** No
**Approved:** 18-Feb-2010 **Renewed:** 18-Feb-2016 **Bypass:**
**Shutoffs:** zzz,dddd,eeee

---

**Type:** RP **Manufacturer:** Wilkins **Model:** 475XL
**Size:** 8 **Orientation:** VUVD **Meters:**
**Manual:** 9 **0.25% Pb:** Yes **Spare Parts Only:** No
**Approved:** 18-Feb-2010 **Renewed:** 18-Feb-2016 **Bypass:**
**Shutoffs:** ppp,qqq,sss,ttt,www,yyy,ssss,uuuu,vvvv,xxxx,yyyy,aaaaa


2018 © University of Southern California

**Type:** RP
**Manufacturer:** Wilkins
**Model:** 475XL
**Size:** 10
**Orientation:** VUVD
**Meters:**
**Manual:** 9
**0.25% Pb:** No
**Spare Parts Only:** No
**Approved:** 18-Feb-2010
**Renewed:** 18-Feb-2016
**Bypass:**
**Shutoffs:** zzz,dddd,eeee

---

**Type:** RP
**Manufacturer:** Wilkins
**Model:** 475XL
**Size:** 10
**Orientation:** VUVD
**Meters:**
**Manual:** 9
**0.25% Pb:** Yes
**Spare Parts Only:** No
**Approved:** 18-Feb-2010
**Renewed:** 18-Feb-2016
**Bypass:**
**Shutoffs:** ppp,qqq,sss,ttt,www,ssss,uuuu,vvvv,xxxx,yyyy,aaaaa

---

**Type:** RP
**Manufacturer:** Wilkins
**Model:** 475XLMS
**Size:** 2 1/2
**Orientation:** VUVD
**Meters:**
**Manual:** 9
**0.25% Pb:** No
**Spare Parts Only:** No
**Approved:** 14-Apr-2010
**Renewed:** 14-Apr-2016
**Bypass:**
**Shutoffs:** ee,ff,ll,mm,tt,uu,yy,zz,zzz,dddd

---

**Type:** RP
**Manufacturer:** Wilkins
**Model:** 475XLMS
**Size:** 2 1/2
**Orientation:** VUVD
**Meters:**
**Manual:** 9
**0.25% Pb:** Yes
**Spare Parts Only:** No
**Approved:** 14-Apr-2010
**Renewed:** 14-Apr-2016
**Bypass:**
**Shutoffs:** (gg),hh,ppp,qqq,ssss,uuuu,vvvv,xxxx,yyyy,aaaaa

---

**Type:** RP
**Manufacturer:** Wilkins
**Model:** 475XLMS
**Size:** 3
**Orientation:** VUVD
**Meters:**
**Manual:** 9
**0.25% Pb:** No
**Spare Parts Only:** No
**Approved:** 14-Apr-2010
**Renewed:** 14-Apr-2016
**Bypass:**
**Shutoffs:** ee,ff,ll,mm,tt,uu,yy,zz,zzz,dddd

---

**Type:** RP
**Manufacturer:** Wilkins
**Model:** 475XLMS
**Size:** 3
**Orientation:** VUVD
**Meters:**
**Manual:** 9
**0.25% Pb:** Yes
**Spare Parts Only:** No
**Approved:** 14-Apr-2010
**Renewed:** 14-Apr-2016
**Bypass:**
**Shutoffs:** (gg),hh,ppp,qqq,ssss,uuuu,vvvv,xxxx,yyyy,aaaaa

---

**Type:** RP
**Manufacturer:** Wilkins
**Model:** 475XLMS
**Size:** 4
**Orientation:** VUVD
**Meters:**
**Manual:** 9
**0.25% Pb:** No
**Spare Parts Only:** No
**Approved:** 14-Apr-2010
**Renewed:** 14-Apr-2016
**Bypass:**
**Shutoffs:** zzz,dddd,eeee

**Type:** RP **Manufacturer:** Wilkins **Model:** 475XLMS
**Size:** 4 **Orientation:** VUVD **Meters:**
**Manual:** 9 **0.25% Pb:** Yes **Spare Parts Only:** No
**Approved:** 14-Apr-2010 **Renewed:** 14-Apr-2016 **Bypass:**
**Shutoffs:** (ppp),qqq,sss,ttt,www,yyy,ssss,uuuu,vvvv,xxxx,yyyy,aaaaa

---

**Type:** RP **Manufacturer:** Wilkins **Model:** 475XLMS
**Size:** 6 **Orientation:** VUVD **Meters:**
**Manual:** 9 **0.25% Pb:** No **Spare Parts Only:** No
**Approved:** 14-Apr-2010 **Renewed:** 14-Apr-2016 **Bypass:**
**Shutoffs:** (gg),hh,ppp,qqq,ssss,uuuu,vvvv,xxxx,yyyy,aaaaa

---

**Type:** RP **Manufacturer:** Wilkins **Model:** 475XLMS
**Size:** 6 **Orientation:** VUVD **Meters:**
**Manual:** 9 **0.25% Pb:** Yes **Spare Parts Only:** No
**Approved:** 14-Apr-2010 **Renewed:** 14-Apr-2016 **Bypass:**
**Shutoffs:** (ppp),qqq,sss,ttt,www,yyy,ssss,uuuu,vvvv,xxxx,yyyy,aaaaa

---

**Type:** RP **Manufacturer:** Wilkins **Model:** 475XLMS
**Size:** 8 **Orientation:** VUVD **Meters:**
**Manual:** 9 **0.25% Pb:** No **Spare Parts Only:** No
**Approved:** 18-Feb-2010 **Renewed:** 18-Feb-2016 **Bypass:**
**Shutoffs:** zzz,dddd,eeee

---

**Type:** RP **Manufacturer:** Wilkins **Model:** 475XLMS
**Size:** 8 **Orientation:** VUVD **Meters:**
**Manual:** 9 **0.25% Pb:** Yes **Spare Parts Only:** No
**Approved:** 18-Feb-2010 **Renewed:** 18-Feb-2016 **Bypass:**
**Shutoffs:** ppp,qqq,sss,ttt,www,yyy,ssss,uuuu,vvvv,xxxx,yyyy,aaaaa

---

**Type:** RP **Manufacturer:** Wilkins **Model:** 475XLMS
**Size:** 10 **Orientation:** H **Meters:**
**Manual:** 9 **0.25% Pb:** No **Spare Parts Only:** No
**Approved:** 18-Feb-2010 **Renewed:** 18-Feb-2016 **Bypass:**
**Shutoffs:** zzz,dddd,eeee

---

**Type:** RP **Manufacturer:** Wilkins **Model:** 475XLMS
**Size:** 10 **Orientation:** H **Meters:**
**Manual:** 9 **0.25% Pb:** Yes **Spare Parts Only:** No
**Approved:** 18-Feb-2010 **Renewed:** 18-Feb-2016 **Bypass:**
**Shutoffs:** ppp,qqq,sss,ttt,www,ssss,uuuu,vvvv,xxxx,yyyy,aaaaa


2018 © University of Southern California

**Type:** RP **Manufacturer:** Wilkins **Model:** 475XLV
**Size:** 2 1/2 **Orientation:** VUVU **Meters:**
**Manual:** 9 **0.25% Pb:** No **Spare Parts Only:** No
**Approved:** 14-Apr-2010 **Renewed:** 14-Apr-2016 **Bypass:**
**Shutoffs:** ee,ff,ll,mm,tt,uu,yy,zz,zzz,dddd

---

**Type:** RP **Manufacturer:** Wilkins **Model:** 475XLV
**Size:** 2 1/2 **Orientation:** VUVU **Meters:**
**Manual:** 9 **0.25% Pb:** Yes **Spare Parts Only:** No
**Approved:** 14-Apr-2010 **Renewed:** 14-Apr-2016 **Bypass:**
**Shutoffs:** (gg),hh,ppp,qqq,ssss,uuuu,vvvv,xxxx,yyyy,aaaaa

---

**Type:** RP **Manufacturer:** Wilkins **Model:** 475XLV
**Size:** 3 **Orientation:** VUVU **Meters:**
**Manual:** 9 **0.25% Pb:** No **Spare Parts Only:** No
**Approved:** 14-Apr-2010 **Renewed:** 14-Apr-2016 **Bypass:**
**Shutoffs:** ee,ff,ll,mm,tt,uu,yy,zz,zzz,dddd

---

**Type:** RP **Manufacturer:** Wilkins **Model:** 475XLV
**Size:** 3 **Orientation:** VUVU **Meters:**
**Manual:** 9 **0.25% Pb:** Yes **Spare Parts Only:** No
**Approved:** 14-Apr-2010 **Renewed:** 14-Apr-2016 **Bypass:**
**Shutoffs:** (gg),hh,ppp,qqq,ssss,uuuu,vvvv,xxxx,yyyy,aaaaa

---

**Type:** RP **Manufacturer:** Wilkins **Model:** 475XLV
**Size:** 4 **Orientation:** VUVU **Meters:**
**Manual:** 9 **0.25% Pb:** No **Spare Parts Only:** No
**Approved:** 14-Apr-2010 **Renewed:** 14-Apr-2016 **Bypass:**
**Shutoffs:** zzz,dddd,eeee

---

**Type:** RP **Manufacturer:** Wilkins **Model:** 475XLV
**Size:** 4 **Orientation:** VUVU **Meters:**
**Manual:** 9 **0.25% Pb:** Yes **Spare Parts Only:** No
**Approved:** 14-Apr-2010 **Renewed:** 14-Apr-2016 **Bypass:**
**Shutoffs:** (ppp),qqq,sss,ttt,www,yyy,ssss,uuuu,vvvv,xxxx,yyyy,aaaaa

---

**Type:** RP **Manufacturer:** Wilkins **Model:** 475XLV
**Size:** 6 **Orientation:** VUVU **Meters:**
**Manual:** 9 **0.25% Pb:** No **Spare Parts Only:** No
**Approved:** 14-Apr-2010 **Renewed:** 14-Apr-2016 **Bypass:**
**Shutoffs:** zzz,dddd,eeee

**Type:** RP **Manufacturer:** Wilkins **Model:** 475XLV
**Size:** 6 **Orientation:** VUVU **Meters:**
**Manual:** 9 **0.25% Pb:** Yes **Spare Parts Only:** No
**Approved:** 14-Apr-2010 **Renewed:** 14-Apr-2016 **Bypass:**
**Shutoffs:** (ppp),qqq,sss,ttt,www,yyy,ssss,uuuu,vvvv,xxxx,yyyy,aaaaa

---

**Type:** RP **Manufacturer:** Wilkins **Model:** 475XLV
**Size:** 8 **Orientation:** VUVU **Meters:**
**Manual:** 9 **0.25% Pb:** No **Spare Parts Only:** No
**Approved:** 18-Feb-2010 **Renewed:** 18-Feb-2016 **Bypass:**
**Shutoffs:** zzz,dddd,eeee

---

**Type:** RP **Manufacturer:** Wilkins **Model:** 475XLV
**Size:** 8 **Orientation:** VUVU **Meters:**
**Manual:** 9 **0.25% Pb:** Yes **Spare Parts Only:** No
**Approved:** 18-Feb-2010 **Renewed:** 18-Feb-2016 **Bypass:**
**Shutoffs:** ppp,qqq,sss,ttt,www,yyy,ssss,uuuu,vvvv,xxxx,yyyy,aaaaa

---

**Type:** RP **Manufacturer:** Wilkins **Model:** 475XLV
**Size:** 10 **Orientation:** VUVU **Meters:**
**Manual:** 9 **0.25% Pb:** No **Spare Parts Only:** No
**Approved:** 18-Feb-2010 **Renewed:** 18-Feb-2016 **Bypass:**
**Shutoffs:** zzz,dddd,eeee

---

**Type:** RP **Manufacturer:** Wilkins **Model:** 475XLV
**Size:** 10 **Orientation:** VUVU **Meters:**
**Manual:** 9 **0.25% Pb:** Yes **Spare Parts Only:** No
**Approved:** 18-Feb-2010 **Renewed:** 18-Feb-2016 **Bypass:**
**Shutoffs:** ppp,qqq,sss,ttt,www,ssss,uuuu,vvvv,xxxx,yyyy,aaaaa

---

**Type:** RP **Manufacturer:** Wilkins **Model:** 475XLVMS
**Size:** 2 1/2 **Orientation:** VUVU **Meters:**
**Manual:** 9 **0.25% Pb:** No **Spare Parts Only:** No
**Approved:** 14-Apr-2010 **Renewed:** 14-Apr-2016 **Bypass:**
**Shutoffs:** ee,ff,ll,mm,tt,uu,yy,zz,zzz,dddd

---

**Type:** RP **Manufacturer:** Wilkins **Model:** 475XLVMS
**Size:** 2 1/2 **Orientation:** VUVU **Meters:**
**Manual:** 9 **0.25% Pb:** Yes **Spare Parts Only:** No
**Approved:** 14-Apr-2010 **Renewed:** 14-Apr-2016 **Bypass:**
**Shutoffs:** (gg),hh,ppp,qqq,ssss,uuuu,vvvv,xxxx,yyyy,aaaaa


2018 © University of Southern California

**Type:** RP **Manufacturer:** Wilkins **Model:** 475XLVMS
**Size:** 3 **Orientation:** VUVU **Meters:**
**Manual:** 9 **0.25% Pb:** No **Spare Parts Only:** No
**Approved:** 14-Apr-2010 **Renewed:** 14-Apr-2016 **Bypass:**
**Shutoffs:** ee,ff,ll,mm,tt,uu,yy,zz,zzz,dddd

---

**Type:** RP **Manufacturer:** Wilkins **Model:** 475XLVMS
**Size:** 3 **Orientation:** VUVU **Meters:**
**Manual:** 9 **0.25% Pb:** Yes **Spare Parts Only:** No
**Approved:** 14-Apr-2010 **Renewed:** 14-Apr-2016 **Bypass:**
**Shutoffs:** (gg),hh,ppp,qqq,ssss,uuuu,vvvv,xxxx,yyyy,aaaaa

---

**Type:** RP **Manufacturer:** Wilkins **Model:** 475XLVMS
**Size:** 4 **Orientation:** VUVU **Meters:**
**Manual:** 9 **0.25% Pb:** No **Spare Parts Only:** No
**Approved:** 14-Apr-2010 **Renewed:** 14-Apr-2016 **Bypass:**
**Shutoffs:** zzz,dddd,eeee

---

**Type:** RP **Manufacturer:** Wilkins **Model:** 475XLVMS
**Size:** 4 **Orientation:** VUVU **Meters:**
**Manual:** 9 **0.25% Pb:** Yes **Spare Parts Only:** No
**Approved:** 14-Apr-2010 **Renewed:** 14-Apr-2016 **Bypass:**
**Shutoffs:** (ppp),qqq,sss,ttt,www,yyy,ssss,uuuu,vvvv,xxxx,yyyy,aaaaa

---

**Type:** RP **Manufacturer:** Wilkins **Model:** 475XLVMS
**Size:** 6 **Orientation:** VUVU **Meters:**
**Manual:** 9 **0.25% Pb:** No **Spare Parts Only:** No
**Approved:** 14-Apr-2010 **Renewed:** 14-Apr-2016 **Bypass:**
**Shutoffs:** zzz,dddd,eeee

---

**Type:** RP **Manufacturer:** Wilkins **Model:** 475XLVMS
**Size:** 6 **Orientation:** VUVU **Meters:**
**Manual:** 9 **0.25% Pb:** Yes **Spare Parts Only:** No
**Approved:** 14-Apr-2010 **Renewed:** 14-Apr-2016 **Bypass:**
**Shutoffs:** (ppp),qqq,sss,ttt,www,yyy,ssss,uuuu,vvvv,xxxx,yyyy,aaaaa

---

**Type:** RP **Manufacturer:** Wilkins **Model:** 475XLVMS
**Size:** 8 **Orientation:** VUVU **Meters:**
**Manual:** 9 **0.25% Pb:** No **Spare Parts Only:** No
**Approved:** 18-Feb-2010 **Renewed:** 18-Feb-2016 **Bypass:**
**Shutoffs:** zzz,dddd,eeee

**Type:** RP
**Manufacturer:** Wilkins
**Model:** 475XLVMS
**Size:** 8
**Orientation:** VUVU
**Meters:**
**Manual:** 9
**0.25% Pb:** Yes
**Spare Parts Only:** No
**Approved:** 18-Feb-2010
**Renewed:** 18-Feb-2016
**Bypass:**
**Shutoffs:** ppp,qqq,sss,ttt,www,yyy,ssss,uuuu,vvvv,xxxx,yyyy,aaaaa

---

**Type:** RP
**Manufacturer:** Wilkins
**Model:** 475XLVMS
**Size:** 10
**Orientation:** H
**Meters:**
**Manual:** 9
**0.25% Pb:** No
**Spare Parts Only:** No
**Approved:** 18-Feb-2010
**Renewed:** 18-Feb-2016
**Bypass:**
**Shutoffs:** zzz,dddd,eeee

---

**Type:** RP
**Manufacturer:** Wilkins
**Model:** 475XLVMS
**Size:** 10
**Orientation:** H
**Meters:**
**Manual:** 9
**0.25% Pb:** Yes
**Spare Parts Only:** No
**Approved:** 18-Feb-2010
**Renewed:** 18-Feb-2016
**Bypass:**
**Shutoffs:** ppp,qqq,sss,ttt,www,ssss,uuuu,vvvv,xxxx,yyyy,aaaaa

---

**Type:** RP
**Manufacturer:** Wilkins
**Model:** 575
**Size:** 3/4
**Orientation:** H
**Meters:**
**Manual:** 5
**0.25% Pb:** No
**Spare Parts Only:** Yes
**Approved:** 28-Apr-1976
**Renewed:** 28-Apr-2018
**Bypass:**

---

**Type:** RP
**Manufacturer:** Wilkins
**Model:** 575
**Size:** 1
**Orientation:** H
**Meters:**
**Manual:** 5
**0.25% Pb:** No
**Spare Parts Only:** Yes
**Approved:** 28-Apr-1976
**Renewed:** 28-Apr-2018
**Bypass:**

---

**Type:** RP
**Manufacturer:** Wilkins
**Model:** 575
**Size:** 2 1/2
**Orientation:** H
**Meters:**
**Manual:** 7
**0.25% Pb:** No
**Spare Parts Only:** Yes
**Approved:** 25-Sep-1986
**Renewed:** 25-Sep-2016
**Bypass:**
**Shutoffs:** gg,ee,tt,yy

---

**Type:** RP
**Manufacturer:** Wilkins
**Model:** 575
**Size:** 3
**Orientation:** H
**Meters:**
**Manual:** 5
**0.25% Pb:** No
**Spare Parts Only:** Yes
**Approved:** 20-Aug-1979
**Renewed:** 20-Aug-2018
**Bypass:**
**Shutoffs:** gg,ee,tt,yy


2018 © University of Southern California

**Type:** RP
**Size:** 4
**Manual:** 5
**Approved:** 08-Jun-1980
**Shutoffs:** gg,ee,tt,yy
**Manufacturer:** Wilkins
**Orientation:** H
**0.25% Pb:** No
**Renewed:** 08-Jun-2016
**Model:** 575
**Meters:**
**Spare Parts Only:** Yes
**Bypass:**

---

**Type:** RP
**Size:** 6
**Manual:** 6
**Approved:** 06-Jul-1981
**Shutoffs:** gg,ee,tt,yy
**Manufacturer:** Wilkins
**Orientation:** H
**0.25% Pb:** No
**Renewed:** 06-Jul-2017
**Model:** 575
**Meters:**
**Spare Parts Only:** Yes
**Bypass:**

---

**Type:** RP
**Size:** 1 1/4
**Manual:** 5
**Approved:** 11-Oct-1976
**Shutoffs:** ii
**Manufacturer:** Wilkins
**Orientation:** H
**0.25% Pb:** No
**Renewed:** 11-Oct-2018
**Model:** 575 (MOD-III)
**Meters:**
**Spare Parts Only:** Yes
**Bypass:**

---

**Type:** RP
**Size:** 1 1/2
**Manual:** 5
**Approved:** 11-Oct-1976
**Shutoffs:** ii
**Manufacturer:** Wilkins
**Orientation:** H
**0.25% Pb:** No
**Renewed:** 11-Oct-2018
**Model:** 575 (MOD-III)
**Meters:**
**Spare Parts Only:** Yes
**Bypass:**

---

**Type:** RP
**Size:** 2
**Manual:** 5
**Approved:** 11-Oct-1976
**Shutoffs:** ii
**Manufacturer:** Wilkins
**Orientation:** H
**0.25% Pb:** No
**Renewed:** 11-Oct-2018
**Model:** 575 (MOD-III)
**Meters:**
**Spare Parts Only:** Yes
**Bypass:**

---

**Type:** RP
**Size:** 3/4
**Manual:** 7
**Approved:** 17-Apr-1987
**Shutoffs:** ii
**Manufacturer:** Wilkins
**Orientation:** H
**0.25% Pb:** No
**Renewed:** 17-Apr-2017
**Model:** 575A
**Meters:**
**Spare Parts Only:** Yes
**Bypass:**

---

**Type:** RP
**Size:** 1
**Manual:** 7
**Approved:** 17-Apr-1987
**Shutoffs:** ii
**Manufacturer:** Wilkins
**Orientation:** H
**0.25% Pb:** No
**Renewed:** 17-Apr-2017
**Model:** 575A
**Meters:**
**Spare Parts Only:** Yes
**Bypass:**

2018 © University of Southern California

**Type:** RP
**Manufacturer:** Wilkins
**Model:** 575M10
**Size:** 10
**Orientation:** H
**Meters:**
**Manual:** 6
**0.25% Pb:** No
**Spare Parts Only:** Yes
**Approved:** 01-Jun-1983
**Renewed:** 01-Jun-2016
**Bypass:**
**Shutoffs:** gg,ee,tt,yy
**Notes:** 6"x6"x10" manifold, formerly MBC-10"

---

**Type:** RP
**Manufacturer:** Wilkins
**Model:** 575M8
**Size:** 8
**Orientation:** H
**Meters:**
**Manual:** 6
**0.25% Pb:** No
**Spare Parts Only:** Yes
**Approved:** 11-Apr-1983
**Renewed:** 11-Apr-2016
**Bypass:**
**Shutoffs:** gg,ee,tt,yy
**Notes:** 4"x4"x8" manifold, formerly MBC-8"

---

**Type:** RP
**Manufacturer:** Wilkins
**Model:** 975
**Size:** 3/4
**Orientation:** H
**Meters:**
**Manual:** 8
**0.25% Pb:** No
**Spare Parts Only:** Yes
**Approved:** 18-Jul-1991
**Renewed:** 18-Jul-2018
**Bypass:**
**Shutoffs:** ii

---

**Type:** RP
**Manufacturer:** Wilkins
**Model:** 975
**Size:** 1
**Orientation:** H
**Meters:**
**Manual:** 8
**0.25% Pb:** No
**Spare Parts Only:** Yes
**Approved:** 18-Jul-1991
**Renewed:** 18-Jul-2018
**Bypass:**
**Shutoffs:** ii

---

**Type:** RP
**Manufacturer:** Wilkins
**Model:** 975
**Size:** 1 1/4
**Orientation:** H
**Meters:**
**Manual:** 8
**0.25% Pb:** No
**Spare Parts Only:** Yes
**Approved:** 18-Jul-1991
**Renewed:** 18-Jul-2018
**Bypass:**
**Shutoffs:** ii

---

**Type:** RP
**Manufacturer:** Wilkins
**Model:** 975
**Size:** 1 1/2
**Orientation:** H
**Meters:**
**Manual:** 8
**0.25% Pb:** No
**Spare Parts Only:** Yes
**Approved:** 18-Jul-1991
**Renewed:** 18-Jul-2018
**Bypass:**
**Shutoffs:** ii


2018 © University of Southern California

**Type:** RP
**Manufacturer:** Wilkins
**Model:** 975
**Size:** 2
**Orientation:** H
**Meters:**
**Manual:** 8
**0.25% Pb:** No
**Spare Parts Only:** Yes
**Approved:** 18-Jul-1991
**Renewed:** 18-Jul-2018
**Bypass:**
**Shutoffs:** ii

---

**Type:** RP
**Manufacturer:** Wilkins
**Model:** 975
**Size:** 2 1/2
**Orientation:** H
**Meters:**
**Manual:** 8
**0.25% Pb:** No
**Spare Parts Only:** Yes
**Approved:** 26-Nov-1991
**Renewed:** 26-Nov-2015
**Bypass:**
**Shutoffs:** gg,ee,ff,hh,tt,uu,yy,zz,ssss,tttt,vvvv,wwww,yyyy,zzzz

---

**Type:** RP
**Manufacturer:** Wilkins
**Model:** 975
**Size:** 3
**Orientation:** H
**Meters:**
**Manual:** 8
**0.25% Pb:** No
**Spare Parts Only:** Yes
**Approved:** 08-Nov-1991
**Renewed:** 08-Nov-2015
**Bypass:**
**Shutoffs:** gg,ee,ff,hh,tt,uu,yy,zz,ssss,tttt,vvvv,wwww,yyyy,zzzz

---

**Type:** RP
**Manufacturer:** Wilkins
**Model:** 975
**Size:** 4
**Orientation:** H
**Meters:**
**Manual:** 8
**0.25% Pb:** No
**Spare Parts Only:** Yes
**Approved:** 08-Nov-1991
**Renewed:** 08-Nov-2015
**Bypass:**
**Shutoffs:** gg,ee,ff,hh,tt,uu,yy,zz,ppp,ssss,tttt,vvvv,wwww,yyyy,zzzz

---

**Type:** RP
**Manufacturer:** Wilkins
**Model:** 975
**Size:** 6
**Orientation:** H
**Meters:**
**Manual:** 8
**0.25% Pb:** No
**Spare Parts Only:** Yes
**Approved:** 08-Nov-1991
**Renewed:** 08-Nov-2015
**Bypass:**
**Shutoffs:** gg,ee,ff,hh,tt,uu,yy,zz,ppp,ssss,tttt,vvvv,wwww,yyyy,zzzz

---

**Type:** RP
**Manufacturer:** Wilkins
**Model:** 975
**Size:** 8
**Orientation:** H
**Meters:**
**Manual:** 8
**0.25% Pb:** No
**Spare Parts Only:** Yes
**Approved:** 06-Feb-1995
**Renewed:** 06-Feb-2016
**Bypass:**
**Shutoffs:**
(ppp),qqq,sss,ttt,www,yyy,zzz,dddd,eeee,ssss,uuuu,vvvv,xxxx,yyyy,aaaaa,kkkkk,lllll,gggggg,iiiiii,jjjjjj,llllll,mmmmmm,ooooo
o

**Type:** RP
**Manufacturer:** Wilkins
**Model:** 975
**Size:** 10
**Orientation:** H
**Meters:**
**Manual:** 8
**0.25% Pb:** No
**Spare Parts Only:** Yes
**Approved:** 06-Feb-1995
**Renewed:** 06-Feb-2016
**Bypass:**
**Shutoffs:** (gg),ee,ff,hh,tt,uu,yy,zz,ppp,ssss,tttt,vvvv,wwww,yyyy,zzzz

---

**Type:** RP
**Manufacturer:** Wilkins
**Model:** 975A
**Size:** 3/4
**Orientation:** H
**Meters:**
**Manual:** 8
**0.25% Pb:** No
**Spare Parts Only:** Yes
**Approved:** 18-Jul-1991
**Renewed:** 18-Jul-2018
**Bypass:**
**Shutoffs:** ii

---

**Type:** RP
**Manufacturer:** Wilkins
**Model:** 975A
**Size:** 1
**Orientation:** H
**Meters:**
**Manual:** 8
**0.25% Pb:** No
**Spare Parts Only:** Yes
**Approved:** 18-Jul-1991
**Renewed:** 18-Jul-2018
**Bypass:**
**Shutoffs:** ii

---

**Type:** RP
**Manufacturer:** Wilkins
**Model:** 975A
**Size:** 1 1/4
**Orientation:** H
**Meters:**
**Manual:** 8
**0.25% Pb:** No
**Spare Parts Only:** Yes
**Approved:** 18-Jul-1991
**Renewed:** 18-Jul-2018
**Bypass:**
**Shutoffs:** ii

---

**Type:** RP
**Manufacturer:** Wilkins
**Model:** 975A
**Size:** 1 1/2
**Orientation:** H
**Meters:**
**Manual:** 8
**0.25% Pb:** No
**Spare Parts Only:** Yes
**Approved:** 18-Jul-1991
**Renewed:** 18-Jul-2018
**Bypass:**
**Shutoffs:** ii

---

**Type:** RP
**Manufacturer:** Wilkins
**Model:** 975A
**Size:** 2
**Orientation:** H
**Meters:**
**Manual:** 8
**0.25% Pb:** No
**Spare Parts Only:** Yes
**Approved:** 18-Jul-1991
**Renewed:** 18-Jul-2018
**Bypass:**
**Shutoffs:** ii

---

**Type:** RP
**Manufacturer:** Wilkins
**Model:** 975BMS
**Size:** 2 1/2
**Orientation:** H
**Meters:**
**Manual:** 8
**0.25% Pb:** No
**Spare Parts Only:** Yes
**Approved:** 17-Jun-1997
**Renewed:** 17-Jun-2018
**Bypass:**
**Shutoffs:** (gg),ee,ff,hh,tt,uu,yy,zz,ssss,tttt,vvvv,wwww,yyyy,zzzz


2018 © University of Southern California

**Type:** RP **Manufacturer:** Wilkins **Model:** 975BMS
**Size:** 3 **Orientation:** H **Meters:**
**Manual:** 8 **0.25% Pb:** No **Spare Parts Only:** Yes
**Approved:** 17-Jun-1997 **Renewed:** 17-Jun-2018 **Bypass:**
**Shutoffs:** (gg),ee,ff,hh,tt,uu,yy,zz,ssss,tttt,vvvv,wwww,yyyy,zzzz

---

**Type:** RP **Manufacturer:** Wilkins **Model:** 975BMS
**Size:** 4 **Orientation:** H **Meters:**
**Manual:** 8 **0.25% Pb:** No **Spare Parts Only:** Yes
**Approved:** 17-Jun-1997 **Renewed:** 17-Jun-2018 **Bypass:**
**Shutoffs:** gg,ee,ff,hh,tt,uu,yy,zz,ssss,tttt,vvvv,wwww,yyyy,zzzz

---

**Type:** RP **Manufacturer:** Wilkins **Model:** 975BMS
**Size:** 6 **Orientation:** H **Meters:**
**Manual:** 8 **0.25% Pb:** No **Spare Parts Only:** Yes
**Approved:** 17-Jun-1997 **Renewed:** 17-Jun-2018 **Bypass:**
**Shutoffs:** gg,ee,ff,hh,tt,uu,yy,zz,ssss,tttt,vvvv,wwww,yyyy,zzzz

---

**Type:** RP **Manufacturer:** Wilkins **Model:** 975BMS
**Size:** 8 **Orientation:** H **Meters:**
**Manual:** 8 **0.25% Pb:** No **Spare Parts Only:** Yes
**Approved:** 17-Jun-1997 **Renewed:** 17-Jun-2018 **Bypass:**
**Shutoffs:** (gg),ee,ff,hh,tt,uu,yy,zz,ppp,ssss,tttt,vvvv,wwww,yyyy,zzzz

---

**Type:** RP **Manufacturer:** Wilkins **Model:** 975BMS
**Size:** 10 **Orientation:** H **Meters:**
**Manual:** 8 **0.25% Pb:** No **Spare Parts Only:** Yes
**Approved:** 17-Jun-1997 **Renewed:** 17-Jun-2018 **Bypass:**
**Shutoffs:** (gg),ee,ff,hh,tt,uu,yy,zz,ppp,ssss,tttt,vvvv,wwww,yyyy,zzzz

---

**Type:** RP **Manufacturer:** Wilkins **Model:** 975MS
**Size:** 2 1/2 **Orientation:** H **Meters:**
**Manual:** 8 **0.25% Pb:** No **Spare Parts Only:** Yes
**Approved:** 05-May-1995 **Renewed:** 05-May-2016 **Bypass:**
**Shutoffs:** (gg),ee,ff,hh,tt,uu,yy,zz,ssss,tttt,vvvv,wwww,yyyy,zzzz

---

**Type:** RP **Manufacturer:** Wilkins **Model:** 975MS
**Size:** 3 **Orientation:** H **Meters:**
**Manual:** 8 **0.25% Pb:** No **Spare Parts Only:** Yes
**Approved:** 05-May-1995 **Renewed:** 05-May-2016 **Bypass:**
**Shutoffs:** (gg),ee,ff,hh,tt,uu,yy,zz,ssss,tttt,vvvv,wwww,yyyy,zzzz

**Type:** RP **Manufacturer:** Wilkins **Model:** 975MS
**Size:** 4 **Orientation:** H **Meters:**
**Manual:** 8 **0.25% Pb:** No **Spare Parts Only:** Yes
**Approved:** 05-May-1995 **Renewed:** 05-May-2016 **Bypass:**
**Shutoffs:** gg,ee,ff,hh,tt,uu,yy,zz,ssss,tttt,vvvv,wwww,yyyy,zzzz

---

**Type:** RP **Manufacturer:** Wilkins **Model:** 975MS
**Size:** 6 **Orientation:** H **Meters:**
**Manual:** 8 **0.25% Pb:** No **Spare Parts Only:** Yes
**Approved:** 05-May-1995 **Renewed:** 05-May-2016 **Bypass:**
**Shutoffs:** gg,ee,ff,hh,tt,uu,yy,zz,ssss,tttt,vvvv,wwww,yyyy,zzzz

---

**Type:** RP **Manufacturer:** Wilkins **Model:** 975MS
**Size:** 8 **Orientation:** H **Meters:**
**Manual:** 8 **0.25% Pb:** No **Spare Parts Only:** Yes
**Approved:** 05-Dec-1996 **Renewed:** 05-Dec-2017 **Bypass:**
**Shutoffs:** (gg),ee,ff,hh,tt,uu,yy,zz,ppp,ssss,tttt,vvvv,wwww,yyyy,zzzz

---

**Type:** RP **Manufacturer:** Wilkins **Model:** 975MS
**Size:** 10 **Orientation:** H **Meters:**
**Manual:** 8 **0.25% Pb:** No **Spare Parts Only:** Yes
**Approved:** 05-Dec-1996 **Renewed:** 05-Dec-2017 **Bypass:**
**Shutoffs:** (gg),ee,ff,hh,tt,uu,yy,zz,ppp,ssss,tttt,vvvv,wwww,yyyy,zzzz

---

**Type:** RP **Manufacturer:** Wilkins **Model:** 975XL
**Size:** 1/4 **Orientation:** H **Meters:**
**Manual:** 8 **0.25% Pb:** No **Spare Parts Only:** No
**Approved:** 12-Jul-1994 **Renewed:** 12-Jul-2018 **Bypass:**
**Shutoffs:** (ii)
**Notes:** Testcocks: Female Threaded End or 45 degree male SAE flare

---

**Type:** RP **Manufacturer:** Wilkins **Model:** 975XL
**Size:** 3/8 **Orientation:** H **Meters:**
**Manual:** 8 **0.25% Pb:** No **Spare Parts Only:** No
**Approved:** 12-Jul-1994 **Renewed:** 12-Jul-2018 **Bypass:**
**Shutoffs:** (ii)
**Notes:** Testcocks: Female Threaded End or 45 degree male SAE flare


2018 © University of Southern California

**Type:** RP
**Manufacturer:** Wilkins
**Model:** 975XL
**Size:** 1/2
**Orientation:** H
**Meters:**
**Manual:** 8
**0.25% Pb:** No
**Spare Parts Only:** No
**Approved:** 12-Jul-1994
**Renewed:** 12-Jul-2018
**Bypass:**
**Shutoffs:** (ii)
**Notes:** Testcocks: Female Threaded End or 45 degree male SAE flare

---

**Type:** RP
**Manufacturer:** Wilkins
**Model:** 975XL
**Size:** 3/4
**Orientation:** H
**Meters:**
**Manual:** 8
**0.25% Pb:** No
**Spare Parts Only:** No
**Approved:** 02-Nov-1992
**Renewed:** 02-Nov-2016
**Bypass:**
**Shutoffs:** (ii),ooo
**Notes:** Testcocks: Female Threaded End or 45 degree male SAE flare

---

**Type:** RP
**Manufacturer:** Wilkins
**Model:** 975XL
**Size:** 1
**Orientation:** H
**Meters:**
**Manual:** 8
**0.25% Pb:** No
**Spare Parts Only:** No
**Approved:** 02-Nov-1992
**Renewed:** 02-Nov-2016
**Bypass:**
**Shutoffs:** (ii),ooo
**Notes:** Testcocks: Female Threaded End or 45 degree male SAE flare

---

**Type:** RP
**Manufacturer:** Wilkins
**Model:** 975XL
**Size:** 1 1/4
**Orientation:** H
**Meters:**
**Manual:** 8
**0.25% Pb:** No
**Spare Parts Only:** No
**Approved:** 02-Nov-1992
**Renewed:** 02-Nov-2016
**Bypass:**
**Shutoffs:** (ii),ooo,ggg

---

**Type:** RP
**Manufacturer:** Wilkins
**Model:** 975XL
**Size:** 1 1/2
**Orientation:** H
**Meters:**
**Manual:** 8
**0.25% Pb:** No
**Spare Parts Only:** No
**Approved:** 02-Nov-1992
**Renewed:** 02-Nov-2016
**Bypass:**
**Shutoffs:** (ii),ooo

---

**Type:** RP
**Manufacturer:** Wilkins
**Model:** 975XL
**Size:** 2
**Orientation:** H
**Meters:**
**Manual:** 8
**0.25% Pb:** No
**Spare Parts Only:** No
**Approved:** 02-Nov-1992
**Renewed:** 02-Nov-2016
**Bypass:**
**Shutoffs:** (ii),bbb,ooo,bbbbb,ccccc,pppppp

**Type:** RP
**Manufacturer:** Wilkins
**Model:** 975XL2
**Size:** 1/4
**Orientation:** H
**Meters:**
**Manual:** 8
**0.25% Pb:** Yes
**Spare Parts Only:** No
**Approved:** 01-Oct-2009
**Renewed:** 01-Oct-2018
**Bypass:**
**Shutoffs:** (iiii)
**Notes:** Testcocks: Female Threaded End or 45 degree male SAE flare

---

**Type:** RP
**Manufacturer:** Wilkins
**Model:** 975XL2
**Size:** 3/8
**Orientation:** H
**Meters:**
**Manual:** 8
**0.25% Pb:** Yes
**Spare Parts Only:** No
**Approved:** 01-Oct-2009
**Renewed:** 01-Oct-2018
**Bypass:**
**Shutoffs:** (iiii)
**Notes:** Testcocks: Female Threaded End or 45 degree male SAE flare

---

**Type:** RP
**Manufacturer:** Wilkins
**Model:** 975XL2
**Size:** 1/2
**Orientation:** H
**Meters:**
**Manual:** 8
**0.25% Pb:** Yes
**Spare Parts Only:** No
**Approved:** 01-Oct-2009
**Renewed:** 01-Oct-2018
**Bypass:**
**Shutoffs:** (iiii)
**Notes:** Testcocks: Female Threaded End or 45 degree male SAE flare

---

**Type:** RP
**Manufacturer:** Wilkins
**Model:** 975XL2
**Size:** 3/4
**Orientation:** H
**Meters:**
**Manual:** 8
**0.25% Pb:** Yes
**Spare Parts Only:** No
**Approved:** 29-Jul-2009
**Renewed:** 29-Jul-2018
**Bypass:**
**Shutoffs:** (iiii)
**Notes:** Testcocks: Female Threaded End or 45 degree male SAE flare

---

**Type:** RP
**Manufacturer:** Wilkins
**Model:** 975XL2
**Size:** 1
**Orientation:** H
**Meters:**
**Manual:** 8
**0.25% Pb:** Yes
**Spare Parts Only:** No
**Approved:** 29-Jul-2009
**Renewed:** 29-Jul-2018
**Bypass:**
**Shutoffs:** (iiii)
**Notes:** Testcocks: Female Threaded End or 45 degree male SAE flare

---

**Type:** RP
**Manufacturer:** Wilkins
**Model:** 975XL2
**Size:** 1 1/4
**Orientation:** H
**Meters:**
**Manual:** 8
**0.25% Pb:** Yes
**Spare Parts Only:** No
**Approved:** 21-Aug-2009
**Renewed:** 21-Aug-2018
**Bypass:**
**Shutoffs:** (iiii)


2018 © University of Southern California

**Type:** RP
**Size:** 1 1/2
**Manual:** 8
**Approved:** 21-Aug-2009
**Shutoffs:** (iiii)
**Manufacturer:** Wilkins
**Orientation:** H
**0.25% Pb:** Yes
**Renewed:** 21-Aug-2018
**Model:** 975XL2
**Meters:**
**Spare Parts Only:** No
**Bypass:**

---

**Type:** RP
**Size:** 2
**Manual:** 8
**Approved:** 21-Aug-2009
**Shutoffs:** (iiii),pppppp
**Manufacturer:** Wilkins
**Orientation:** H
**0.25% Pb:** Yes
**Renewed:** 21-Aug-2018
**Model:** 975XL2
**Meters:**
**Spare Parts Only:** No
**Bypass:**

---

**Type:** RP
**Size:** 3/4
**Manual:** 8
**Approved:** 09-Sep-2010
**Shutoffs:** (iiii)
**Manufacturer:** Wilkins
**Orientation:** H
**0.25% Pb:** Yes
**Renewed:** 09-Sep-2016
**Model:** 975XL2BMS
**Meters:**
**Spare Parts Only:** No
**Bypass:**

---

**Type:** RP
**Size:** 1
**Manual:** 8
**Approved:** 09-Sep-2010
**Shutoffs:** (iiii)
**Manufacturer:** Wilkins
**Orientation:** H
**0.25% Pb:** Yes
**Renewed:** 09-Sep-2016
**Model:** 975XL2BMS
**Meters:**
**Spare Parts Only:** No
**Bypass:**

---

**Type:** RP
**Size:** 1 1/4
**Manual:** 8
**Approved:** 09-Sep-2010
**Shutoffs:** (iiii)
**Manufacturer:** Wilkins
**Orientation:** H
**0.25% Pb:** Yes
**Renewed:** 09-Sep-2016
**Model:** 975XL2BMS
**Meters:**
**Spare Parts Only:** No
**Bypass:**

---

**Type:** RP
**Size:** 1 1/2
**Manual:** 8
**Approved:** 09-Sep-2010
**Shutoffs:** (iiii)
**Manufacturer:** Wilkins
**Orientation:** H
**0.25% Pb:** Yes
**Renewed:** 09-Sep-2016
**Model:** 975XL2BMS
**Meters:**
**Spare Parts Only:** No
**Bypass:**

---

**Type:** RP
**Size:** 2
**Manual:** 8
**Approved:** 09-Sep-2010
**Shutoffs:** (iiii)
**Manufacturer:** Wilkins
**Orientation:** H
**0.25% Pb:** Yes
**Renewed:** 09-Sep-2016
**Model:** 975XL2BMS
**Meters:**
**Spare Parts Only:** No
**Bypass:**

**Type:** RP
**Manufacturer:** Wilkins
**Model:** 975XL2MS
**Size:** 3/4
**Orientation:** H
**Meters:**
**Manual:** 8
**0.25% Pb:** Yes
**Spare Parts Only:** No
**Approved:** 09-Sep-2010
**Renewed:** 09-Sep-2016
**Bypass:**
**Shutoffs:** (iiii)
**Notes:** Testcocks: Female Threaded End or 45 degree male SAE flare

---

**Type:** RP
**Manufacturer:** Wilkins
**Model:** 975XL2MS
**Size:** 1
**Orientation:** H
**Meters:**
**Manual:** 8
**0.25% Pb:** Yes
**Spare Parts Only:** No
**Approved:** 09-Sep-2010
**Renewed:** 09-Sep-2016
**Bypass:**
**Shutoffs:** (iiii)
**Notes:** Testcocks: Female Threaded End or 45 degree male SAE flare

---

**Type:** RP
**Manufacturer:** Wilkins
**Model:** 975XL2MS
**Size:** 1 1/4
**Orientation:** H
**Meters:**
**Manual:** 8
**0.25% Pb:** Yes
**Spare Parts Only:** No
**Approved:** 09-Sep-2010
**Renewed:** 09-Sep-2016
**Bypass:**
**Shutoffs:** (iiii)

---

**Type:** RP
**Manufacturer:** Wilkins
**Model:** 975XL2MS
**Size:** 1 1/2
**Orientation:** H
**Meters:**
**Manual:** 8
**0.25% Pb:** Yes
**Spare Parts Only:** No
**Approved:** 09-Sep-2010
**Renewed:** 09-Sep-2016
**Bypass:**
**Shutoffs:** (iiii)

---

**Type:** RP
**Manufacturer:** Wilkins
**Model:** 975XL2MS
**Size:** 2
**Orientation:** H
**Meters:**
**Manual:** 8
**0.25% Pb:** Yes
**Spare Parts Only:** No
**Approved:** 09-Sep-2010
**Renewed:** 09-Sep-2016
**Bypass:**
**Shutoffs:** (iiii)

---

**Type:** RP
**Manufacturer:** Wilkins
**Model:** 975XL2SE
**Size:** 3/4
**Orientation:** VUVD
**Meters:**
**Manual:** 9
**0.25% Pb:** Yes
**Spare Parts Only:** No
**Approved:** 22-Feb-2011
**Renewed:** 22-Feb-2017
**Bypass:**
**Shutoffs:** (iiii)
**Notes:** Testcocks: Female Threaded End or 45 degree male SAE flare


2018 © University of Southern California

**Type:** RP
**Manufacturer:** Wilkins
**Model:** 975XL2SE
**Size:** 3/4
**Orientation:** VUVU
**Meters:**
**Manual:** 9
**0.25% Pb:** Yes
**Spare Parts Only:** No
**Approved:** 22-Feb-2011
**Renewed:** 22-Feb-2017
**Bypass:**
**Shutoffs:** (iiii)
**Notes:** Testcocks: Female Threaded End or 45 degree male SAE flare

---

**Type:** RP
**Manufacturer:** Wilkins
**Model:** 975XL2SE
**Size:** 1
**Orientation:** VUVD
**Meters:**
**Manual:** 9
**0.25% Pb:** Yes
**Spare Parts Only:** No
**Approved:** 22-Feb-2011
**Renewed:** 22-Feb-2017
**Bypass:**
**Shutoffs:** (iiii)
**Notes:** Testcocks: Female Threaded End or 45 degree male SAE flare

---

**Type:** RP
**Manufacturer:** Wilkins
**Model:** 975XL2SE
**Size:** 1
**Orientation:** VUVU
**Meters:**
**Manual:** 9
**0.25% Pb:** Yes
**Spare Parts Only:** No
**Approved:** 22-Feb-2011
**Renewed:** 22-Feb-2017
**Bypass:**
**Shutoffs:** (iiii)
**Notes:** Testcocks: Female Threaded End or 45 degree male SAE flare

---

**Type:** RP
**Manufacturer:** Wilkins
**Model:** 975XL2SE
**Size:** 1 1/4
**Orientation:** VUVD
**Meters:**
**Manual:** 9
**0.25% Pb:** Yes
**Spare Parts Only:** No
**Approved:** 22-Feb-2011
**Renewed:** 22-Feb-2017
**Bypass:**
**Shutoffs:** (iiii)

---

**Type:** RP
**Manufacturer:** Wilkins
**Model:** 975XL2SE
**Size:** 1 1/4
**Orientation:** VUVU
**Meters:**
**Manual:** 9
**0.25% Pb:** Yes
**Spare Parts Only:** No
**Approved:** 22-Feb-2011
**Renewed:** 22-Feb-2017
**Bypass:**
**Shutoffs:** (iiii)

---

**Type:** RP
**Manufacturer:** Wilkins
**Model:** 975XL2SE
**Size:** 1 1/2
**Orientation:** VUVD
**Meters:**
**Manual:** 9
**0.25% Pb:** Yes
**Spare Parts Only:** No
**Approved:** 22-Feb-2011
**Renewed:** 22-Feb-2017
**Bypass:**
**Shutoffs:** (iiii)

**Type:** RP
**Manufacturer:** Wilkins
**Model:** 975XL2SE
**Size:** 1 1/2
**Orientation:** VUVU
**Meters:**
**Manual:** 9
**0.25% Pb:** Yes
**Spare Parts Only:** No
**Approved:** 22-Feb-2011
**Renewed:** 22-Feb-2017
**Bypass:**
**Shutoffs:** (iiii)

---

**Type:** RP
**Manufacturer:** Wilkins
**Model:** 975XL2SE
**Size:** 2
**Orientation:** VUVD
**Meters:**
**Manual:** 9
**0.25% Pb:** Yes
**Spare Parts Only:** No
**Approved:** 22-Feb-2011
**Renewed:** 22-Feb-2017
**Bypass:**
**Shutoffs:** (iiii)

---

**Type:** RP
**Manufacturer:** Wilkins
**Model:** 975XL2SE
**Size:** 2
**Orientation:** VUVU
**Meters:**
**Manual:** 9
**0.25% Pb:** Yes
**Spare Parts Only:** No
**Approved:** 22-Feb-2011
**Renewed:** 22-Feb-2017
**Bypass:**
**Shutoffs:** (iiii)

---

**Type:** RP
**Manufacturer:** Wilkins
**Model:** 975XL2SEU
**Size:** 3/4
**Orientation:** VUVD
**Meters:**
**Manual:** 9
**0.25% Pb:** Yes
**Spare Parts Only:** No
**Approved:** 29-Mar-2011
**Renewed:** 29-Mar-2017
**Bypass:**
**Shutoffs:** (mmmmm)
**Notes:** Testcocks: Female Threaded End or 45 degree male SAE flare

---

**Type:** RP
**Manufacturer:** Wilkins
**Model:** 975XL2SEU
**Size:** 3/4
**Orientation:** VUVU
**Meters:**
**Manual:** 9
**0.25% Pb:** Yes
**Spare Parts Only:** No
**Approved:** 29-Mar-2011
**Renewed:** 29-Mar-2017
**Bypass:**
**Shutoffs:** (mmmmm)
**Notes:** Testcocks: Female Threaded End or 45 degree male SAE flare

---

**Type:** RP
**Manufacturer:** Wilkins
**Model:** 975XL2SEU
**Size:** 1
**Orientation:** VUVD
**Meters:**
**Manual:** 9
**0.25% Pb:** Yes
**Spare Parts Only:** No
**Approved:** 29-Mar-2011
**Renewed:** 29-Mar-2017
**Bypass:**
**Shutoffs:** (mmmmm)
**Notes:** Testcocks: Female Threaded End or 45 degree male SAE flare


2018 © University of Southern California

**Type:** RP
**Manufacturer:** Wilkins
**Model:** 975XL2SEU
**Size:** 1
**Orientation:** VUVU
**Meters:**
**Manual:** 9
**0.25% Pb:** Yes
**Spare Parts Only:** No
**Approved:** 29-Mar-2011
**Renewed:** 29-Mar-2017
**Bypass:**
**Shutoffs:** (mmmmm)
**Notes:** Testcocks: Female Threaded End or 45 degree male SAE flare

---

**Type:** RP
**Manufacturer:** Wilkins
**Model:** 975XL2SEU
**Size:** 1 1/4
**Orientation:** VUVD
**Meters:**
**Manual:** 9
**0.25% Pb:** Yes
**Spare Parts Only:** No
**Approved:** 22-Feb-2011
**Renewed:** 22-Feb-2017
**Bypass:**
**Shutoffs:** (mmmmm)

---

**Type:** RP
**Manufacturer:** Wilkins
**Model:** 975XL2SEU
**Size:** 1 1/4
**Orientation:** VUVU
**Meters:**
**Manual:** 9
**0.25% Pb:** Yes
**Spare Parts Only:** No
**Approved:** 22-Feb-2011
**Renewed:** 22-Feb-2017
**Bypass:**
**Shutoffs:** (mmmmm)

---

**Type:** RP
**Manufacturer:** Wilkins
**Model:** 975XL2SEU
**Size:** 1 1/2
**Orientation:** VUVD
**Meters:**
**Manual:** 9
**0.25% Pb:** Yes
**Spare Parts Only:** No
**Approved:** 22-Feb-2011
**Renewed:** 22-Feb-2017
**Bypass:**
**Shutoffs:** (mmmmm)

---

**Type:** RP
**Manufacturer:** Wilkins
**Model:** 975XL2SEU
**Size:** 1 1/2
**Orientation:** VUVU
**Meters:**
**Manual:** 9
**0.25% Pb:** Yes
**Spare Parts Only:** No
**Approved:** 22-Feb-2011
**Renewed:** 22-Feb-2017
**Bypass:**
**Shutoffs:** (mmmmm)

---

**Type:** RP
**Manufacturer:** Wilkins
**Model:** 975XL2SEU
**Size:** 2
**Orientation:** VUVD
**Meters:**
**Manual:** 9
**0.25% Pb:** Yes
**Spare Parts Only:** No
**Approved:** 22-Feb-2011
**Renewed:** 22-Feb-2017
**Bypass:**
**Shutoffs:** (mmmmm)

**Type:** RP
**Manufacturer:** Wilkins
**Model:** 975XL2SEU
**Size:** 2
**Orientation:** VUVU
**Meters:**
**Manual:** 9
**0.25% Pb:** Yes
**Spare Parts Only:** No
**Approved:** 22-Feb-2011
**Renewed:** 22-Feb-2017
**Bypass:**
**Shutoffs:** (mmmmm)

---

**Type:** RP
**Manufacturer:** Wilkins
**Model:** 975XL2TCU
**Size:** 1/2
**Orientation:** H
**Meters:**
**Manual:** 8
**0.25% Pb:** Yes
**Spare Parts Only:** No
**Approved:** 09-Sep-2010
**Renewed:** 09-Sep-2016
**Bypass:**
**Shutoffs:** (iiii)
**Notes:** Testcocks: Female Threaded End or 45 degree male SAE flare

---

**Type:** RP
**Manufacturer:** Wilkins
**Model:** 975XL2TCU
**Size:** 3/4
**Orientation:** H
**Meters:**
**Manual:** 8
**0.25% Pb:** Yes
**Spare Parts Only:** No
**Approved:** 09-Sep-2010
**Renewed:** 09-Sep-2016
**Bypass:**
**Shutoffs:** (iiii)
**Notes:** Testcocks: Female Threaded End or 45 degree male SAE flare

---

**Type:** RP
**Manufacturer:** Wilkins
**Model:** 975XL2TCU
**Size:** 1
**Orientation:** H
**Meters:**
**Manual:** 8
**0.25% Pb:** Yes
**Spare Parts Only:** No
**Approved:** 09-Sep-2010
**Renewed:** 09-Sep-2016
**Bypass:**
**Shutoffs:** (iiii)
**Notes:** Testcocks: Female Threaded End or 45 degree male SAE flare

---

**Type:** RP
**Manufacturer:** Wilkins
**Model:** 975XL2TCU
**Size:** 1 1/4
**Orientation:** H
**Meters:**
**Manual:** 8
**0.25% Pb:** Yes
**Spare Parts Only:** No
**Approved:** 09-Sep-2010
**Renewed:** 09-Sep-2016
**Bypass:**
**Shutoffs:** (iiii)

---

**Type:** RP
**Manufacturer:** Wilkins
**Model:** 975XL2TCU
**Size:** 1 1/2
**Orientation:** H
**Meters:**
**Manual:** 8
**0.25% Pb:** Yes
**Spare Parts Only:** No
**Approved:** 09-Sep-2010
**Renewed:** 09-Sep-2016
**Bypass:**
**Shutoffs:** (iiii)


2018 © University of Southern California

**Type:** RP
**Manufacturer:** Wilkins
**Model:** 975XL2TCU
**Size:** 2
**Orientation:** H
**Meters:**
**Manual:** 8
**0.25% Pb:** Yes
**Spare Parts Only:** No
**Approved:** 09-Sep-2010
**Renewed:** 09-Sep-2016
**Bypass:**
**Shutoffs:** (iiii)

---

**Type:** RP
**Manufacturer:** Wilkins
**Model:** 975XL2U
**Size:** 3/4
**Orientation:** H
**Meters:**
**Manual:** 8
**0.25% Pb:** Yes
**Spare Parts Only:** No
**Approved:** 22-Feb-2011
**Renewed:** 22-Feb-2017
**Bypass:**
**Shutoffs:** (mmmmm)
**Notes:** Testcocks: Female Threaded End or 45 degree male SAE flare

---

**Type:** RP
**Manufacturer:** Wilkins
**Model:** 975XL2U
**Size:** 1
**Orientation:** H
**Meters:**
**Manual:** 8
**0.25% Pb:** Yes
**Spare Parts Only:** No
**Approved:** 22-Feb-2011
**Renewed:** 22-Feb-2017
**Bypass:**
**Shutoffs:** (mmmmm)
**Notes:** Testcocks: Female Threaded End or 45 degree male SAE flare

---

**Type:** RP
**Manufacturer:** Wilkins
**Model:** 975XL2U
**Size:** 1 1/2
**Orientation:** H
**Meters:**
**Manual:** 8
**0.25% Pb:** Yes
**Spare Parts Only:** No
**Approved:** 22-Feb-2011
**Renewed:** 22-Feb-2017
**Bypass:**
**Shutoffs:** (mmmmm)

---

**Type:** RP
**Manufacturer:** Wilkins
**Model:** 975XL2U
**Size:** 2
**Orientation:** H
**Meters:**
**Manual:** 8
**0.25% Pb:** Yes
**Spare Parts Only:** No
**Approved:** 22-Feb-2011
**Renewed:** 22-Feb-2017
**Bypass:**
**Shutoffs:** (mmmmm)

---

**Type:** RP
**Manufacturer:** Wilkins
**Model:** 975XL2V
**Size:** 3/4
**Orientation:** VUVD
**Meters:**
**Manual:** 9
**0.25% Pb:** Yes
**Spare Parts Only:** No
**Approved:** 22-Feb-2011
**Renewed:** 22-Feb-2017
**Bypass:**
**Shutoffs:** (iiii)
**Notes:** Testcocks: Female Threaded End or 45 degree male SAE flare

**Type:** RP
**Manufacturer:** Wilkins
**Model:** 975XL2V
**Size:** 3/4
**Orientation:** VUVU
**Meters:**
**Manual:** 9
**0.25% Pb:** Yes
**Spare Parts Only:** No
**Approved:** 22-Feb-2011
**Renewed:** 22-Feb-2017
**Bypass:**
**Shutoffs:** (iiii)
**Notes:** Testcocks: Female Threaded End or 45 degree male SAE flare

---

**Type:** RP
**Manufacturer:** Wilkins
**Model:** 975XL2V
**Size:** 1
**Orientation:** VUVD
**Meters:**
**Manual:** 9
**0.25% Pb:** Yes
**Spare Parts Only:** No
**Approved:** 22-Feb-2011
**Renewed:** 22-Feb-2017
**Bypass:**
**Shutoffs:** (iiii)
**Notes:** Testcocks: Female Threaded End or 45 degree male SAE flare

---

**Type:** RP
**Manufacturer:** Wilkins
**Model:** 975XL2V
**Size:** 1
**Orientation:** VUVU
**Meters:**
**Manual:** 9
**0.25% Pb:** Yes
**Spare Parts Only:** No
**Approved:** 22-Feb-2011
**Renewed:** 22-Feb-2017
**Bypass:**
**Shutoffs:** (iiii)
**Notes:** Testcocks: Female Threaded End or 45 degree male SAE flare

---

**Type:** RP
**Manufacturer:** Wilkins
**Model:** 975XLBF
**Size:** 2
**Orientation:** H
**Meters:**
**Manual:** 8
**0.25% Pb:** No
**Spare Parts Only:** No
**Approved:** 22-Feb-2011
**Renewed:** 22-Feb-2017
**Bypass:**
**Shutoffs:** (bbbbb),pppppp

---

**Type:** RP
**Manufacturer:** Wilkins
**Model:** 975XLBFSS
**Size:** 2
**Orientation:** H
**Meters:**
**Manual:** 8
**0.25% Pb:** No
**Spare Parts Only:** No
**Approved:** 22-Feb-2011
**Renewed:** 22-Feb-2017
**Bypass:**
**Shutoffs:** (ccccc),pppppp

---

**Type:** RP
**Manufacturer:** Wilkins
**Model:** 975XLBMS
**Size:** 3/4
**Orientation:** H
**Meters:**
**Manual:** 8
**0.25% Pb:** No
**Spare Parts Only:** No
**Approved:** 09-May-1997
**Renewed:** 09-May-2018
**Bypass:**
**Shutoffs:** (ii),ooo


2018 © University of Southern California

**Type:** RP
**Manufacturer:** Wilkins
**Model:** 975XLBMS
**Size:** 1
**Orientation:** H
**Meters:**
**Manual:** 8
**0.25% Pb:** No
**Spare Parts Only:** No
**Approved:** 09-May-1997
**Renewed:** 09-May-2018
**Bypass:**
**Shutoffs:** (ii),ooo

---

**Type:** RP
**Manufacturer:** Wilkins
**Model:** 975XLBMS
**Size:** 1 1/4
**Orientation:** H
**Meters:**
**Manual:** 8
**0.25% Pb:** No
**Spare Parts Only:** No
**Approved:** 09-May-1997
**Renewed:** 09-May-2018
**Bypass:**
**Shutoffs:** (ii),ooo

---

**Type:** RP
**Manufacturer:** Wilkins
**Model:** 975XLBMS
**Size:** 1 1/2
**Orientation:** H
**Meters:**
**Manual:** 8
**0.25% Pb:** No
**Spare Parts Only:** No
**Approved:** 09-May-1997
**Renewed:** 09-May-2018
**Bypass:**
**Shutoffs:** (ii),ooo

---

**Type:** RP
**Manufacturer:** Wilkins
**Model:** 975XLBMS
**Size:** 2
**Orientation:** H
**Meters:**
**Manual:** 8
**0.25% Pb:** No
**Spare Parts Only:** No
**Approved:** 09-May-1997
**Renewed:** 09-May-2018
**Bypass:**
**Shutoffs:** (ii),ooo

---

**Type:** RP
**Manufacturer:** Wilkins
**Model:** 975XLD
**Size:** 3/4
**Orientation:** H
**Meters:**
**Manual:** 9
**0.25% Pb:** No
**Spare Parts Only:** No
**Approved:** 08-Oct-2002
**Renewed:** 08-Oct-2017
**Bypass:**
**Shutoffs:** (ii),ooo
**Notes:** Testcocks: Female Threaded End or 45 degree male SAE flare

---

**Type:** RP
**Manufacturer:** Wilkins
**Model:** 975XLD
**Size:** 3/4
**Orientation:** H
**Meters:**
**Manual:** 10
**0.25% Pb:** Yes
**Spare Parts Only:** No
**Approved:** 03-Jul-2013
**Renewed:** 03-Jul-2016
**Bypass:**
**Shutoffs:** (iiii)
**Notes:** Testcocks: Female Threaded End or 45 degree male SAE flare

**Type:** RP
**Manufacturer:** Wilkins
**Model:** 975XLMS
**Size:** 3/4
**Orientation:** H
**Meters:**
**Manual:** 8
**0.25% Pb:** No
**Spare Parts Only:** No
**Approved:** 30-Aug-1994
**Renewed:** 30-Aug-2018
**Bypass:**
**Shutoffs:** (ii),ooo

---

**Type:** RP
**Manufacturer:** Wilkins
**Model:** 975XLMS
**Size:** 1
**Orientation:** H
**Meters:**
**Manual:** 8
**0.25% Pb:** No
**Spare Parts Only:** No
**Approved:** 30-Aug-1994
**Renewed:** 30-Aug-2018
**Bypass:**
**Shutoffs:** (ii),ooo

---

**Type:** RP
**Manufacturer:** Wilkins
**Model:** 975XLMS
**Size:** 1 1/4
**Orientation:** H
**Meters:**
**Manual:** 8
**0.25% Pb:** No
**Spare Parts Only:** No
**Approved:** 30-Aug-1994
**Renewed:** 30-Aug-2018
**Bypass:**
**Shutoffs:** (ii),ooo

---

**Type:** RP
**Manufacturer:** Wilkins
**Model:** 975XLMS
**Size:** 1 1/2
**Orientation:** H
**Meters:**
**Manual:** 8
**0.25% Pb:** No
**Spare Parts Only:** No
**Approved:** 30-Aug-1994
**Renewed:** 30-Aug-2018
**Bypass:**
**Shutoffs:** (ii),ooo

---

**Type:** RP
**Manufacturer:** Wilkins
**Model:** 975XLMS
**Size:** 2
**Orientation:** H
**Meters:**
**Manual:** 8
**0.25% Pb:** No
**Spare Parts Only:** No
**Approved:** 30-Aug-1994
**Renewed:** 30-Aug-2018
**Bypass:**
**Shutoffs:** (ii),ooo

---

**Type:** RP
**Manufacturer:** Wilkins
**Model:** 975XLSE
**Size:** 3/4
**Orientation:** VUVD
**Meters:**
**Manual:** 9
**0.25% Pb:** No
**Spare Parts Only:** No
**Approved:** 16-Oct-2000
**Renewed:** 16-Oct-2018
**Bypass:**
**Shutoffs:** (ii),ooo
**Notes:** Testcocks: Female Threaded End or 45 degree male SAE flare


2018 © University of Southern California

**Type:** RP
**Manufacturer:** Wilkins
**Model:** 975XLSE
**Size:** 3/4
**Orientation:** VUVU
**Meters:**
**Manual:** 9
**0.25% Pb:** No
**Spare Parts Only:** No
**Approved:** 16-Oct-2000
**Renewed:** 16-Oct-2018
**Bypass:**
**Shutoffs:** (ii),ooo
**Notes:** Testcocks: Female Threaded End or 45 degree male SAE flare

---

**Type:** RP
**Manufacturer:** Wilkins
**Model:** 975XLSE
**Size:** 1
**Orientation:** VUVD
**Meters:**
**Manual:** 9
**0.25% Pb:** No
**Spare Parts Only:** No
**Approved:** 16-Oct-2000
**Renewed:** 16-Oct-2018
**Bypass:**
**Shutoffs:** (ii),ooo
**Notes:** Testcocks: Female Threaded End or 45 degree male SAE flare

---

**Type:** RP
**Manufacturer:** Wilkins
**Model:** 975XLSE
**Size:** 1
**Orientation:** VUVU
**Meters:**
**Manual:** 9
**0.25% Pb:** No
**Spare Parts Only:** No
**Approved:** 16-Oct-2000
**Renewed:** 16-Oct-2018
**Bypass:**
**Shutoffs:** (ii),ooo
**Notes:** Testcocks: Female Threaded End or 45 degree male SAE flare

---

**Type:** RP
**Manufacturer:** Wilkins
**Model:** 975XLSE
**Size:** 1 1/4
**Orientation:** VUVD
**Meters:**
**Manual:** 9
**0.25% Pb:** No
**Spare Parts Only:** No
**Approved:** 04-Nov-1999
**Renewed:** 04-Nov-2017
**Bypass:**
**Shutoffs:** (ii),ooo

---

**Type:** RP
**Manufacturer:** Wilkins
**Model:** 975XLSE
**Size:** 1 1/4
**Orientation:** VUVU
**Meters:**
**Manual:** 9
**0.25% Pb:** No
**Spare Parts Only:** No
**Approved:** 04-Nov-1999
**Renewed:** 04-Nov-2017
**Bypass:**
**Shutoffs:** (ii),ooo

---

**Type:** RP
**Manufacturer:** Wilkins
**Model:** 975XLSE
**Size:** 1 1/2
**Orientation:** VUVD
**Meters:**
**Manual:** 9
**0.25% Pb:** No
**Spare Parts Only:** No
**Approved:** 04-Nov-1999
**Renewed:** 04-Nov-2017
**Bypass:**
**Shutoffs:** (ii),ooo

**Type:** RP
**Manufacturer:** Wilkins
**Model:** 975XLSE
**Size:** 1 1/2
**Orientation:** VUVU
**Meters:**
**Manual:** 9
**0.25% Pb:** No
**Spare Parts Only:** No
**Approved:** 04-Nov-1999
**Renewed:** 04-Nov-2017
**Bypass:**
**Shutoffs:** (ii),ooo

---

**Type:** RP
**Manufacturer:** Wilkins
**Model:** 975XLSE
**Size:** 2
**Orientation:** VUVD
**Meters:**
**Manual:** 9
**0.25% Pb:** No
**Spare Parts Only:** No
**Approved:** 04-Nov-1999
**Renewed:** 04-Nov-2017
**Bypass:**
**Shutoffs:** (ii),ooo

---

**Type:** RP
**Manufacturer:** Wilkins
**Model:** 975XLSE
**Size:** 2
**Orientation:** VUVU
**Meters:**
**Manual:** 9
**0.25% Pb:** No
**Spare Parts Only:** No
**Approved:** 04-Nov-1999
**Renewed:** 04-Nov-2017
**Bypass:**
**Shutoffs:** (ii).ooo

---

**Type:** RP
**Manufacturer:** Wilkins
**Model:** 975XLSEU
**Size:** 3/4
**Orientation:** VUVD
**Meters:**
**Manual:** 9
**0.25% Pb:** No
**Spare Parts Only:** No
**Approved:** 16-Oct-2000
**Renewed:** 16-Oct-2018
**Bypass:**
**Shutoffs:** (ggg),xxx
**Notes:** Testcocks: Female Threaded End or 45 degree male SAE flare

---

**Type:** RP
**Manufacturer:** Wilkins
**Model:** 975XLSEU
**Size:** 3/4
**Orientation:** VUVU
**Meters:**
**Manual:** 9
**0.25% Pb:** No
**Spare Parts Only:** No
**Approved:** 16-Oct-2000
**Renewed:** 16-Oct-2018
**Bypass:**
**Shutoffs:** (ggg),xxx
**Notes:** Testcocks: Female Threaded End or 45 degree male SAE flare

---

**Type:** RP
**Manufacturer:** Wilkins
**Model:** 975XLSEU
**Size:** 1
**Orientation:** VUVD
**Meters:**
**Manual:** 9
**0.25% Pb:** No
**Spare Parts Only:** No
**Approved:** 16-Oct-2000
**Renewed:** 16-Oct-2018
**Bypass:**
**Shutoffs:** (ggg),xxx
**Notes:** Testcocks: Female Threaded End or 45 degree male SAE flare


2018 © University of Southern California

**Type:** RP
**Manufacturer:** Wilkins
**Model:** 975XLSEU
**Size:** 1
**Orientation:** VUVU
**Meters:**
**Manual:** 9
**0.25% Pb:** No
**Spare Parts Only:** No
**Approved:** 16-Oct-2000
**Renewed:** 16-Oct-2018
**Bypass:**
**Shutoffs:** (ggg),xxx
**Notes:** Testcocks: Female Threaded End or 45 degree male SAE flare

---

**Type:** RP
**Manufacturer:** Wilkins
**Model:** 975XLSEU
**Size:** 1 1/4
**Orientation:** VUVD
**Meters:**
**Manual:** 9
**0.25% Pb:** No
**Spare Parts Only:** No
**Approved:** 27-Mar-2000
**Renewed:** 27-Mar-2018
**Bypass:**
**Shutoffs:** (ggg),xxx

---

**Type:** RP
**Manufacturer:** Wilkins
**Model:** 975XLSEU
**Size:** 1 1/4
**Orientation:** VUVU
**Meters:**
**Manual:** 9
**0.25% Pb:** No
**Spare Parts Only:** No
**Approved:** 27-Mar-2000
**Renewed:** 27-Mar-2018
**Bypass:**
**Shutoffs:** (ggg),xxx

---

**Type:** RP
**Manufacturer:** Wilkins
**Model:** 975XLSEU
**Size:** 1 1/2
**Orientation:** VUVD
**Meters:**
**Manual:** 9
**0.25% Pb:** No
**Spare Parts Only:** No
**Approved:** 27-Mar-2000
**Renewed:** 27-Mar-2018
**Bypass:**
**Shutoffs:** (ggg),xxx

---

**Type:** RP
**Manufacturer:** Wilkins
**Model:** 975XLSEU
**Size:** 1 1/2
**Orientation:** VUVU
**Meters:**
**Manual:** 9
**0.25% Pb:** No
**Spare Parts Only:** No
**Approved:** 27-Mar-2000
**Renewed:** 27-Mar-2018
**Bypass:**
**Shutoffs:** (ggg),xxx

---

**Type:** RP
**Manufacturer:** Wilkins
**Model:** 975XLSEU
**Size:** 2
**Orientation:** VUVD
**Meters:**
**Manual:** 9
**0.25% Pb:** No
**Spare Parts Only:** No
**Approved:** 27-Mar-2000
**Renewed:** 27-Mar-2018
**Bypass:**
**Shutoffs:** (ggg),xxx

**Type:** RP
**Manufacturer:** Wilkins
**Model:** 975XLSEU
**Size:** 2
**Orientation:** VUVU
**Meters:**
**Manual:** 9
**0.25% Pb:** No
**Spare Parts Only:** No
**Approved:** 27-Mar-2000
**Renewed:** 27-Mar-2018
**Bypass:**
**Shutoffs:** (ggg),xxx

---

**Type:** RP
**Manufacturer:** Wilkins
**Model:** 975XLST
**Size:** 3/8
**Orientation:** H
**Meters:**
**Manual:** 9
**0.25% Pb:** Yes
**Spare Parts Only:** No
**Approved:** 19-Nov-2002
**Renewed:** 19-Nov-2017
**Bypass:**
**Shutoffs:** (ggggg)

---

**Type:** RP
**Manufacturer:** Wilkins
**Model:** 975XLST
**Size:** 1/2
**Orientation:** H
**Meters:**
**Manual:** 9
**0.25% Pb:** Yes
**Spare Parts Only:** No
**Approved:** 19-Nov-2002
**Renewed:** 19-Nov-2017
**Bypass:**
**Shutoffs:** (ggggg)

---

**Type:** RP
**Manufacturer:** Wilkins
**Model:** 975XLTCU
**Size:** 1/2
**Orientation:** H
**Meters:**
**Manual:** 8
**0.25% Pb:** No
**Spare Parts Only:** No
**Approved:** 05-Apr-2007
**Renewed:** 05-Apr-2016
**Bypass:**
**Shutoffs:** (ii),ooo
**Notes:** Testcocks: Female Threaded End or 45 degree male SAE flare

---

**Type:** RP
**Manufacturer:** Wilkins
**Model:** 975XLTCU
**Size:** 3/4
**Orientation:** H
**Meters:**
**Manual:** 8
**0.25% Pb:** No
**Spare Parts Only:** No
**Approved:** 27-Jun-2006
**Renewed:** 27-Jun-2018
**Bypass:**
**Shutoffs:** (ii),ooo,xxx
**Notes:** Testcocks: Female Threaded End or 45 degree male SAE flare

---

**Type:** RP
**Manufacturer:** Wilkins
**Model:** 975XLTCU
**Size:** 1
**Orientation:** H
**Meters:**
**Manual:** 8
**0.25% Pb:** No
**Spare Parts Only:** No
**Approved:** 27-Jun-2006
**Renewed:** 27-Jun-2018
**Bypass:**
**Shutoffs:** (ii),ooo,xxx
**Notes:** Testcocks: Female Threaded End or 45 degree male SAE flare


2018 © University of Southern California

**Type:** RP
**Manufacturer:** Wilkins
**Model:** 975XLTCU
**Size:** 1 1/4
**Orientation:** H
**Meters:**
**Manual:** 8
**0.25% Pb:** No
**Spare Parts Only:** No
**Approved:** 27-Jun-2006
**Renewed:** 27-Jun-2018
**Bypass:**
**Shutoffs:** (ii),ooo,xxx

---

**Type:** RP
**Manufacturer:** Wilkins
**Model:** 975XLTCU
**Size:** 1 1/2
**Orientation:** H
**Meters:**
**Manual:** 8
**0.25% Pb:** No
**Spare Parts Only:** No
**Approved:** 27-Jun-2006
**Renewed:** 27-Jun-2018
**Bypass:**
**Shutoffs:** (ii),ooo,xxx

---

**Type:** RP
**Manufacturer:** Wilkins
**Model:** 975XLTCU
**Size:** 2
**Orientation:** H
**Meters:**
**Manual:** 8
**0.25% Pb:** No
**Spare Parts Only:** No
**Approved:** 27-Jun-2006
**Renewed:** 27-Jun-2018
**Bypass:**
**Shutoffs:** (ii),ooo,xxx

---

**Type:** RP
**Manufacturer:** Wilkins
**Model:** 975XLU
**Size:** 3/4
**Orientation:** H
**Meters:**
**Manual:** 8
**0.25% Pb:** No
**Spare Parts Only:** No
**Approved:** 02-Sep-1993
**Renewed:** 02-Sep-2017
**Bypass:**
**Shutoffs:** (ggg),xxx
**Notes:** Testcocks: Female Threaded End or 45 degree male SAE flare

---

**Type:** RP
**Manufacturer:** Wilkins
**Model:** 975XLU
**Size:** 1
**Orientation:** H
**Meters:**
**Manual:** 8
**0.25% Pb:** No
**Spare Parts Only:** No
**Approved:** 02-Sep-1993
**Renewed:** 02-Sep-2017
**Bypass:**
**Shutoffs:** (ggg),xxx
**Notes:** Testcocks: Female Threaded End or 45 degree male SAE flare

---

**Type:** RP
**Manufacturer:** Wilkins
**Model:** 975XLU
**Size:** 1 1/2
**Orientation:** H
**Meters:**
**Manual:** 8
**0.25% Pb:** No
**Spare Parts Only:** No
**Approved:** 02-Sep-1993
**Renewed:** 02-Sep-2017
**Bypass:**
**Shutoffs:** (ggg),xxx

**Type:** RP
**Manufacturer:** Wilkins
**Model:** 975XLU
**Size:** 2
**Orientation:** H
**Meters:**
**Manual:** 8
**0.25% Pb:** No
**Spare Parts Only:** No
**Approved:** 02-Sep-1993
**Renewed:** 02-Sep-2017
**Bypass:**
**Shutoffs:** (ggg),xxx

---

**Type:** RP
**Manufacturer:** Wilkins
**Model:** 975XLV
**Size:** 3/4
**Orientation:** VUVD
**Meters:**
**Manual:** 9
**0.25% Pb:** No
**Spare Parts Only:** No
**Approved:** 07-Jan-2001
**Renewed:** 07-Jan-2016
**Bypass:**
**Shutoffs:** (ii),ooo

---

**Type:** RP
**Manufacturer:** Wilkins
**Model:** 975XLV
**Size:** 3/4
**Orientation:** VUVU
**Meters:**
**Manual:** 9
**0.25% Pb:** No
**Spare Parts Only:** No
**Approved:** 07-Jan-2001
**Renewed:** 07-Jan-2016
**Bypass:**
**Shutoffs:** (ii),ooo

---

**Type:** RP
**Manufacturer:** Wilkins
**Model:** 975XLV
**Size:** 1
**Orientation:** VUVD
**Meters:**
**Manual:** 9
**0.25% Pb:** No
**Spare Parts Only:** No
**Approved:** 07-Jan-2001
**Renewed:** 07-Jan-2016
**Bypass:**
**Shutoffs:** (ii),ooo

---

**Type:** RP
**Manufacturer:** Wilkins
**Model:** 975XLV
**Size:** 1
**Orientation:** VUVU
**Meters:**
**Manual:** 9
**0.25% Pb:** No
**Spare Parts Only:** No
**Approved:** 07-Jan-2001
**Renewed:** 07-Jan-2016
**Bypass:**
**Shutoffs:** (ii),ooo

---

**Type:** RP
**Manufacturer:** Wilkins
**Model:** MBC-10"
**Size:** 10
**Orientation:**
**Meters:**
**Manual:**
**0.25% Pb:** No
**Spare Parts Only:** No
**Approved:**
**Renewed:**
**Bypass:**
**Notes:** 6"x6"x10" manifold, Model designation changed to 575M10

---

**Type:** RP
**Manufacturer:** Wilkins
**Model:** MBC-8"
**Size:** 8
**Orientation:**
**Meters:**
**Manual:**
**0.25% Pb:** No
**Spare Parts Only:** No
**Approved:**
**Renewed:**
**Bypass:**
**Notes:** 6"x6"x10" manifold,Model designation changed to 575M8


2018 © University of Southern California

**Type:** RPDA
**Manufacturer:** Ames
**Model:** 5000
**Size:** 4
**Orientation:** H
**Meters:** (M),A,B,C,D,E,F,G,H,I,J,K,L,N,O,P,Q,T
**Manual:** 8
**0.25% Pb:** No
**Spare Parts Only:** Yes
**Approved:** 28-Dec-1989
**Renewed:** 20-Dec-2016
**Bypass:** Conbraco 4020402 3/4 (H)
**Shutoffs:** (uu),ee,ff,gg,hh,ll,mm,oo,pp,tt,ccc,ddd,ffff,gggg

---

**Type:** RPDA
**Manufacturer:** Ames
**Model:** 5000
**Size:** 6
**Orientation:** H
**Meters:** (K),A,B,C,D,E,F,G,H,I,J,L,M,N,O,P,Q,T
**Manual:** 8
**0.25% Pb:** No
**Spare Parts Only:** Yes
**Approved:** 28-Dec-1989
**Renewed:** 20-Dec-2016
**Bypass:** Conbraco 4020402 3/4 (H)
**Shutoffs:** (uu),ee,ff,gg,hh,ll,mm,oo,pp,tt,ccc,ddd,ffff,gggg

---

**Type:** RPDA
**Manufacturer:** Ames
**Model:** 5000
**Size:** 8
**Orientation:** H
**Meters:** (K),A,B,C,D,E,F,G,H,I,J,L,M,N,O,P,Q,T
**Manual:** 8
**0.25% Pb:** No
**Spare Parts Only:** Yes
**Approved:** 01-Jul-1989
**Renewed:** 01-Jul-2016
**Bypass:** Conbraco 4020402 3/4 (H)
**Shutoffs:** (uu),ee,ff,gg,hh,ll,mm,oo,pp,tt,ccc,ddd,ffff,gggg

---

**Type:** RPDA
**Manufacturer:** Ames
**Model:** 5000
**Size:** 10
**Orientation:** H
**Meters:** (M),A,B,C,D,E,F,G,H,I,J,K,L,N,O,P,Q,T
**Manual:** 8
**0.25% Pb:** No
**Spare Parts Only:** Yes
**Approved:** 19-Mar-1990
**Renewed:** 19-Mar-2017
**Bypass:** Conbraco 4020402 3/4 (H)
**Shutoffs:** uu,ee,ff,gg,hh,ll,mm,oo,pp,tt,ccc,ddd,ffff,gggg

---

**Type:** RPDA
**Manufacturer:** Ames
**Model:** 5000CIV
**Size:** 2 1/2
**Orientation:** H
**Meters:** (H),C,D,E,F,G,I,J,K,L,M,N,O,P,Q,T
**Manual:** 8
**0.25% Pb:** No
**Spare Parts Only:** Yes
**Approved:** 07-Jul-2000
**Renewed:** 07-Jul-2018
**Bypass:** Watts 909QT 3/4 (H)
**Shutoffs:** (pp),hh,mm,uu

---

**Type:** RPDA
**Manufacturer:** Ames
**Model:** 5000CIV
**Size:** 3
**Orientation:** H
**Meters:** (N),B,C,D,E,F,G,H,I,J,K,L,M,O,P,Q,T
**Manual:** 8
**0.25% Pb:** No
**Spare Parts Only:** Yes
**Approved:** 07-Jul-2000
**Renewed:** 07-Jul-2018
**Bypass:** Watts 909QT 3/4 (H)
**Shutoffs:** (pp),hh,mm,uu,eee

**Type:** RPDA
**Manufacturer:** Ames
**Model:** 5000CIV
**Size:** 4
**Orientation:** H
**Meters:** (N),B,C,D,E,F,G,H,I,J,K,L,M,O,P,Q,T
**Manual:** 8
**0.25% Pb:** No
**Spare Parts Only:** Yes
**Approved:** 07-Jul-2000
**Renewed:** 07-Jul-2018
**Bypass:** Watts 909QT 3/4 (H)
**Shutoffs:** (pp),hh,mm,uu,eee

---

**Type:** RPDA
**Manufacturer:** Ames
**Model:** 5000CIV
**Size:** 6
**Orientation:** H
**Meters:** (N),B,C,D,E,F,G,H,I,J,K,L,M,O,P,Q,T
**Manual:** 8
**0.25% Pb:** No
**Spare Parts Only:** Yes
**Approved:** 07-Jul-2000
**Renewed:** 07-Jul-2018
**Bypass:** Watts 909QT 3/4 (H)
**Shutoffs:** (pp),hh,mm,uu,eee

---

**Type:** RPDA
**Manufacturer:** Ames
**Model:** 5000CIV
**Size:** 8
**Orientation:** H
**Meters:** (N),B,C,D,E,F,G,H,I,J,K,L,M,O,P,Q,T
**Manual:** 8
**0.25% Pb:** No
**Spare Parts Only:** Yes
**Approved:** 07-Jul-2000
**Renewed:** 07-Jul-2018
**Bypass:** Watts 909QT 3/4 (H)
**Shutoffs:** (pp),hh,mm,uu,eee

---

**Type:** RPDA
**Manufacturer:** Ames
**Model:** 5000CIV
**Size:** 10
**Orientation:** H
**Meters:** (N),B,C,D,E,F,G,H,I,J,K,L,M,O,P,Q,T
**Manual:** 8
**0.25% Pb:** No
**Spare Parts Only:** Yes
**Approved:** 07-Jul-2000
**Renewed:** 07-Jul-2018
**Bypass:** Watts 909QT 3/4 (H)
**Shutoffs:** (pp),hh,mm,uu,eee

---

**Type:** RPDA
**Manufacturer:** Ames
**Model:** Colt 500-GV
**Size:** 2 1/2
**Orientation:** H
**Meters:** (N),H,I,J,K,L,M,N,O,P,Q
**Manual:** 9
**0.25% Pb:** No
**Spare Parts Only:** No
**Approved:** 20-Jun-2006
**Renewed:** 20-Jun-2018
**Bypass:** Watts 919QT 3/4" (H)
**Shutoffs:** (zzz)

---

**Type:** RPDA
**Manufacturer:** Ames
**Model:** Colt 500-GV
**Size:** 3
**Orientation:** H
**Meters:** (N),H,I,J,K,L,M,N,O,P,Q
**Manual:** 9
**0.25% Pb:** No
**Spare Parts Only:** No
**Approved:** 20-Jun-2006
**Renewed:** 20-Jun-2018
**Bypass:** Watts 919QT 3/4" (H)
**Shutoffs:** (zzz)


2018 © University of Southern California

**Type:** RPDA
**Size:** 4
**Manual:** 9
**Approved:** 20-Jun-2006
**Shutoffs:** (zzz)
**Manufacturer:** Ames
**Orientation:** H
**0.25% Pb:** No
**Renewed:** 20-Jun-2018
**Model:** Colt 500-GV
**Meters:** (N),H,I,J,K,L,M,N,O,P,Q
**Spare Parts Only:** No
**Bypass:** Watts 919QT 3/4" (H)

---

**Type:** RPDA
**Size:** 6
**Manual:** 9
**Approved:** 20-Jun-2006
**Shutoffs:** (zzz)
**Manufacturer:** Ames
**Orientation:** H
**0.25% Pb:** No
**Renewed:** 20-Jun-2018
**Model:** Colt 500-GV
**Meters:** (N),H,I,J,K,L,M,N,O,P,Q
**Spare Parts Only:** No
**Bypass:** Watts 919QT 3/4" (H)

---

**Type:** RPDA
**Size:** 8
**Manual:** 9
**Approved:** 15-Nov-2010
**Shutoffs:** (zzz)
**Manufacturer:** Ames
**Orientation:** H
**0.25% Pb:** No
**Renewed:** 15-Nov-2016
**Model:** Colt 500-GV
**Meters:** (N),H,I,J,K,L,M,N,O,P,Q
**Spare Parts Only:** No
**Bypass:** Watts 919QT 3/4" (H)

---

**Type:** RPDA
**Size:** 10
**Manual:** 9
**Approved:** 27-Sep-2010
**Shutoffs:** (zzz)
**Manufacturer:** Ames
**Orientation:** H
**0.25% Pb:** No
**Renewed:** 27-Sep-2016
**Model:** Colt 500-GV
**Meters:** (N),H,I,J,K,L,M,N,O,P,Q
**Spare Parts Only:** No
**Bypass:** Watts 919QT 3/4" (H)

---

**Type:** RPDA
**Size:** 2 1/2
**Manual:** 9
**Approved:** 24-Jun-2013
**Shutoffs:** (yyy)
**Manufacturer:** Ames
**Orientation:** VUVD
**0.25% Pb:** No
**Renewed:** 24-Jun-2016
**Model:** Colt 500NBF
**Meters:** (N),H,I,J,K,L,M,N,O,P,Q
**Spare Parts Only:** No
**Bypass:** Watts 919QT 3/4" (H)

---

**Type:** RPDA
**Size:** 3
**Manual:** 9
**Approved:** 28-May-2009
**Shutoffs:** (yyy)
**Manufacturer:** Ames
**Orientation:** VUVD
**0.25% Pb:** No
**Renewed:** 28-May-2018
**Model:** Colt 500NBF
**Meters:** (N),H,I,J,K,L,M,N,O,P,Q
**Spare Parts Only:** No
**Bypass:** Watts 919QT 3/4" (H)

---

**Type:** RPDA
**Size:** 4
**Manual:** 9
**Approved:** 28-May-2009
**Shutoffs:** (yyy)
**Manufacturer:** Ames
**Orientation:** VUVD
**0.25% Pb:** No
**Renewed:** 28-May-2018
**Model:** Colt 500NBF
**Meters:** (N),H,I,J,K,L,M,N,O,P,Q
**Spare Parts Only:** No
**Bypass:** Watts 919QT 3/4" (H)

**Type:** RPDA
**Size:** 8
**Manual:** 9
**Approved:** 14-Jun-2013
**Shutoffs:** (yyy)
**Manufacturer:** Ames
**Orientation:** VUVD
**0.25% Pb:** No
**Renewed:** 14-Jun-2016
**Model:** Colt 500NBF
**Meters:** (N),H,I,J,K,L,M,N,O,P,Q
**Spare Parts Only:** No
**Bypass:** Watts 919QT 3/4" (H)

---

**Type:** RPDA
**Size:** 2 1/2
**Manual:** 9
**Approved:** 28-May-2009
**Shutoffs:** (zzz)
**Manufacturer:** Ames
**Orientation:** VUVD
**0.25% Pb:** No
**Renewed:** 28-May-2018
**Model:** Colt 500NGV
**Meters:** (N),H,I,J,K,L,M,N,O,P,Q
**Spare Parts Only:** No
**Bypass:** Watts 919QT 3/4" (H)

---

**Type:** RPDA
**Size:** 3
**Manual:** 9
**Approved:** 07-Apr-2009
**Shutoffs:** (zzz)
**Manufacturer:** Ames
**Orientation:** VUVD
**0.25% Pb:** No
**Renewed:** 07-Apr-2018
**Model:** Colt 500NGV
**Meters:** (N),H,I,J,K,L,M,N,O,P,Q
**Spare Parts Only:** No
**Bypass:** Watts 919QT 3/4" (H)

---

**Type:** RPDA
**Size:** 4
**Manual:** 9
**Approved:** 07-Apr-2009
**Shutoffs:** (zzz)
**Manufacturer:** Ames
**Orientation:** VUVD
**0.25% Pb:** No
**Renewed:** 07-Apr-2018
**Model:** Colt 500NGV
**Meters:** (N),H,I,J,K,L,M,N,O,P,Q
**Spare Parts Only:** No
**Bypass:** Watts 919QT 3/4" (H)

---

**Type:** RPDA
**Size:** 6
**Manual:** 9
**Approved:** 15-Nov-2010
**Shutoffs:** (zzz)
**Manufacturer:** Ames
**Orientation:** VUVD
**0.25% Pb:** No
**Renewed:** 15-Nov-2016
**Model:** Colt 500NGV
**Meters:** (N),H,I,J,K,L,M,N,O,P,Q
**Spare Parts Only:** No
**Bypass:** Watts 919QT 3/4" (H)

---

**Type:** RPDA
**Size:** 8
**Manual:** 9
**Approved:** 14-Jun-2013
**Shutoffs:** (zzz)
**Manufacturer:** Ames
**Orientation:** VUVD
**0.25% Pb:** No
**Renewed:** 14-Jun-2016
**Model:** Colt 500NGV
**Meters:** (N),H,I,J,K,L,M,N,O,P,Q
**Spare Parts Only:** No
**Bypass:** Watts 919QT 3/4" (H)

---

**Type:** RPDA
**Size:** 2 1/2
**Manual:** 9
**Approved:** 24-Jun-2013
**Shutoffs:** (yyy)
**Manufacturer:** Ames
**Orientation:** VUVU
**0.25% Pb:** No
**Renewed:** 24-Jun-2016
**Model:** Colt 500ZBF
**Meters:** (N),H,I,J,K,L,M,N,O,P,Q
**Spare Parts Only:** No
**Bypass:** Watts 919QT 3/4" (H)


2018 © University of Southern California

**Type:** RPDA
**Size:** 3
**Manual:** 9
**Approved:** 24-Jun-2013
**Shutoffs:** (yyy)
**Manufacturer:** Ames
**Orientation:** VUVU
**0.25% Pb:** No
**Renewed:** 24-Jun-2016
**Model:** Colt 500ZBF
**Meters:** (N),H,I,J,K,L,M,N,O,P,Q
**Spare Parts Only:** No
**Bypass:** Watts 919QT 3/4" (H)

---

**Type:** RPDA
**Size:** 4
**Manual:** 9
**Approved:** 24-Jun-2013
**Shutoffs:** (yyy)
**Manufacturer:** Ames
**Orientation:** VUVU
**0.25% Pb:** No
**Renewed:** 24-Jun-2016
**Model:** Colt 500ZBF
**Meters:** (N),H,I,J,K,L,M,N,O,P,Q
**Spare Parts Only:** No
**Bypass:** Watts 919QT 3/4" (H)

---

**Type:** RPDA
**Size:** 8
**Manual:** 9
**Approved:** 14-Jun-2013
**Shutoffs:** (yyy)
**Manufacturer:** Ames
**Orientation:** VUVU
**0.25% Pb:** No
**Renewed:** 14-Jun-2016
**Model:** Colt 500ZBF
**Meters:** (N),H,I,J,K,L,M,N,O,P,Q
**Spare Parts Only:** No
**Bypass:** Watts 919QT 3/4" (H)

---

**Type:** RPDA
**Size:** 2 1/2
**Manual:** 9
**Approved:** 24-Jun-2013
**Shutoffs:** (zzz)
**Manufacturer:** Ames
**Orientation:** VUVU
**0.25% Pb:** No
**Renewed:** 24-Jun-2016
**Model:** Colt 500ZGV
**Meters:** (N),H,I,J,K,L,M,N,O,P,Q
**Spare Parts Only:** No
**Bypass:** Watts 919QT 3/4" (H)

---

**Type:** RPDA
**Size:** 3
**Manual:** 9
**Approved:** 24-Jun-2013
**Shutoffs:** (zzz)
**Manufacturer:** Ames
**Orientation:** VUVU
**0.25% Pb:** No
**Renewed:** 24-Jun-2016
**Model:** Colt 500ZGV
**Meters:** (N),H,I,J,K,L,M,N,O,P,Q
**Spare Parts Only:** No
**Bypass:** Watts 919QT 3/4" (H)

---

**Type:** RPDA
**Size:** 4
**Manual:** 9
**Approved:** 24-Jun-2013
**Shutoffs:** (zzz)
**Manufacturer:** Ames
**Orientation:** VUVU
**0.25% Pb:** No
**Renewed:** 24-Jun-2016
**Model:** Colt 500ZGV
**Meters:** (N),H,I,J,K,L,M,N,O,P,Q
**Spare Parts Only:** No
**Bypass:** Watts 919QT 3/4" (H)

---

**Type:** RPDA
**Size:** 8
**Manual:** 9
**Approved:** 14-Jun-2013
**Shutoffs:** (zzz)
**Manufacturer:** Ames
**Orientation:** VUVU
**0.25% Pb:** No
**Renewed:** 14-Jun-2016
**Model:** Colt 500ZGV
**Meters:** (N),H,I,J,K,L,M,N,O,P,Q
**Spare Parts Only:** No
**Bypass:** Watts 919QT 3/4" (H)

**Type:** RPDA
**Manufacturer:** Ames
**Model:** LFColt 500-GV
**Size:** 2 1/2
**Orientation:** H
**Meters:** (O)
**Manual:** 9
**0.25% Pb:** Yes
**Spare Parts Only:** No
**Approved:** 08-Jan-2014
**Renewed:** 08-Jan-2017
**Bypass:** Watts LF919QT 3/4" (H)
**Shutoffs:** (zzz)
**Notes:** Lead free compliant version identified with NSF61 mark on meter

---

**Type:** RPDA
**Manufacturer:** Ames
**Model:** LFColt 500-GV
**Size:** 3
**Orientation:** H
**Meters:** (O)
**Manual:** 9
**0.25% Pb:** Yes
**Spare Parts Only:** No
**Approved:** 08-Jan-2014
**Renewed:** 08-Jan-2017
**Bypass:** Watts LF919QT 3/4" (H)
**Shutoffs:** (zzz)
**Notes:** Lead free compliant version identified with NSF61 mark on meter

---

**Type:** RPDA
**Manufacturer:** Ames
**Model:** LFColt 500-GV
**Size:** 4
**Orientation:** H
**Meters:** (O)
**Manual:** 9
**0.25% Pb:** Yes
**Spare Parts Only:** No
**Approved:** 08-Jan-2014
**Renewed:** 08-Jan-2017
**Bypass:** Watts LF919QT 3/4" (H)
**Shutoffs:** (zzz)
**Notes:** Lead free compliant version identified with NSF61 mark on meter

---

**Type:** RPDA
**Manufacturer:** Ames
**Model:** LFColt 500-GV
**Size:** 6
**Orientation:** H
**Meters:** (O)
**Manual:** 9
**0.25% Pb:** Yes
**Spare Parts Only:** No
**Approved:** 08-Jan-2014
**Renewed:** 08-Jan-2017
**Bypass:** Watts LF919QT 3/4" (H)
**Shutoffs:** (zzz)
**Notes:** Lead free compliant version identified with NSF61 mark on meter

---

**Type:** RPDA
**Manufacturer:** Ames
**Model:** LFColt 500GV
**Size:** 2 1/2
**Orientation:** H
**Meters:** (O)
**Manual:** 9
**0.25% Pb:** Yes
**Spare Parts Only:** No
**Approved:** 08-Jan-2014
**Renewed:** 08-Jan-2017
**Bypass:** Watts LF919QT 3/4" (H)
**Shutoffs:** (zzz)
**Notes:** Lead free compliant version identified with NSF61 mark on meter

---

**Type:** RPDA
**Manufacturer:** Ames
**Model:** LFColt 500GV
**Size:** 3
**Orientation:** H
**Meters:** (O)
**Manual:** 9
**0.25% Pb:** Yes
**Spare Parts Only:** No
**Approved:** 08-Jan-2014
**Renewed:** 08-Jan-2017
**Bypass:** Watts LF919QT 3/4" (H)
**Shutoffs:** (zzz)
**Notes:** Lead free compliant version identified with NSF61 mark on meter


2018 © University of Southern California

**Type:** RPDA
**Manufacturer:** Ames
**Model:** LFColt 500GV
**Size:** 4
**Orientation:** H
**Meters:** (O)
**Manual:** 9
**0.25% Pb:** Yes
**Spare Parts Only:** No
**Approved:** 08-Jan-2014
**Renewed:** 08-Jan-2017
**Bypass:** Watts LF919QT 3/4" (H)
**Shutoffs:** (zzz)
**Notes:** Lead free compliant version identified with NSF61 mark on meter

---

**Type:** RPDA
**Manufacturer:** Ames
**Model:** LFColt 500GV
**Size:** 6
**Orientation:** H
**Meters:** (O)
**Manual:** 9
**0.25% Pb:** Yes
**Spare Parts Only:** No
**Approved:** 08-Jan-2014
**Renewed:** 08-Jan-2017
**Bypass:** Watts LF919QT 3/4" (H)
**Shutoffs:** (zzz)
**Notes:** Lead free compliant version identified with NSF61 mark on meter

---

**Type:** RPDA
**Manufacturer:** Ames
**Model:** LFColt 500GV
**Size:** 8
**Orientation:** H
**Meters:** (M)
**Manual:** 9
**0.25% Pb:** Yes
**Spare Parts Only:** No
**Approved:** 13-Aug-2015
**Renewed:** 13-Aug-2018
**Bypass:** Watts LF919QT 3/4" (H)
**Shutoffs:** (zzz)
**Notes:** Lead free compliant version identified with NSF61 mark on meter

---

**Type:** RPDA
**Manufacturer:** Ames
**Model:** LFColt 500GV
**Size:** 10
**Orientation:** H
**Meters:** (M)
**Manual:** 9
**0.25% Pb:** Yes
**Spare Parts Only:** No
**Approved:** 12-Oct-2015
**Renewed:** 12-Oct-2018
**Bypass:** Watts LF919QT 3/4" (H)
**Shutoffs:** (zzz)
**Notes:** Lead free compliant version identified with NSF61 mark on meter

---

**Type:** RPDA
**Manufacturer:** Ames
**Model:** LFColt 500NBF
**Size:** 2 1/2
**Orientation:** VUVD
**Meters:** (O)
**Manual:** 9
**0.25% Pb:** Yes
**Spare Parts Only:** No
**Approved:** 08-Jan-2014
**Renewed:** 08-Jan-2017
**Bypass:** Watts LF919QT 3/4" (H)
**Shutoffs:** (zzz)
**Notes:** Lead free compliant version identified with NSF61 mark on meter

---

**Type:** RPDA
**Manufacturer:** Ames
**Model:** LFColt 500NBF
**Size:** 3
**Orientation:** VUVD
**Meters:** (O)
**Manual:** 9
**0.25% Pb:** Yes
**Spare Parts Only:** No
**Approved:** 08-Jan-2014
**Renewed:** 08-Jan-2017
**Bypass:** Watts LF919QT 3/4" (H)
**Shutoffs:** (zzz)
**Notes:** Lead free compliant version identified with NSF61 mark on meter

**Type:** RPDA
**Manufacturer:** Ames
**Model:** LFColt 500NBF
**Size:** 4
**Orientation:** VUVD
**Meters:** (O)
**Manual:** 9
**0.25% Pb:** Yes
**Spare Parts Only:** No
**Approved:** 08-Jan-2014
**Renewed:** 08-Jan-2017
**Bypass:** Watts LF919QT 3/4" (H)
**Shutoffs:** (zzz)
**Notes:** Lead free compliant version identified with NSF61 mark on meter

---

**Type:** RPDA
**Manufacturer:** Ames
**Model:** LFColt 500NGV
**Size:** 2 1/2
**Orientation:** VUVD
**Meters:** (O)
**Manual:** 9
**0.25% Pb:** Yes
**Spare Parts Only:** No
**Approved:** 08-Jan-2014
**Renewed:** 08-Jan-2017
**Bypass:** Watts LF919QT 3/4" (H)
**Shutoffs:** (zzz)
**Notes:** Lead free compliant version identified with NSF61 mark on meter

---

**Type:** RPDA
**Manufacturer:** Ames
**Model:** LFColt 500NGV
**Size:** 3
**Orientation:** VUVD
**Meters:** (O)
**Manual:** 9
**0.25% Pb:** Yes
**Spare Parts Only:** No
**Approved:** 08-Jan-2014
**Renewed:** 08-Jan-2017
**Bypass:** Watts LF919QT 3/4" (H)
**Shutoffs:** (zzz)
**Notes:** Lead free compliant version identified with NSF61 mark on meter

---

**Type:** RPDA
**Manufacturer:** Ames
**Model:** LFColt 500NGV
**Size:** 4
**Orientation:** VUVD
**Meters:** (O)
**Manual:** 9
**0.25% Pb:** Yes
**Spare Parts Only:** No
**Approved:** 08-Jan-2014
**Renewed:** 08-Jan-2017
**Bypass:** Watts LF919QT 3/4" (H)
**Shutoffs:** (zzz)
**Notes:** Lead free compliant version identified with NSF61 mark on meter

---

**Type:** RPDA
**Manufacturer:** Ames
**Model:** LFColt 500ZBF
**Size:** 2 1/2
**Orientation:** VUVD
**Meters:** (O)
**Manual:** 9
**0.25% Pb:** Yes
**Spare Parts Only:** No
**Approved:** 08-Jan-2014
**Renewed:** 08-Jan-2017
**Bypass:** Watts LF919QT 3/4" (H)
**Shutoffs:** (zzz)
**Notes:** Lead free compliant version identified with NSF61 mark on meter

---

**Type:** RPDA
**Manufacturer:** Ames
**Model:** LFColt 500ZBF
**Size:** 3
**Orientation:** VUVD
**Meters:** (O)
**Manual:** 9
**0.25% Pb:** Yes
**Spare Parts Only:** No
**Approved:** 08-Jan-2014
**Renewed:** 08-Jan-2017
**Bypass:** Watts LF919QT 3/4" (H)
**Shutoffs:** (zzz)
**Notes:** Lead free compliant version identified with NSF61 mark on meter


2018 © University of Southern California

**Type:** RPDA
**Manufacturer:** Ames
**Model:** LFColt 500ZBF
**Size:** 4
**Orientation:** VUVD
**Meters:** (O)
**Manual:** 9
**0.25% Pb:** Yes
**Spare Parts Only:** No
**Approved:** 08-Jan-2014
**Renewed:** 08-Jan-2017
**Bypass:** Watts LF919QT 3/4" (H)
**Shutoffs:** (zzz)
**Notes:** Lead free compliant version identified with NSF61 mark on meter

---

**Type:** RPDA
**Manufacturer:** Ames
**Model:** LFColt 500ZGV
**Size:** 2 1/2
**Orientation:** VUVD
**Meters:** (O)
**Manual:** 9
**0.25% Pb:** Yes
**Spare Parts Only:** No
**Approved:** 08-Jan-2014
**Renewed:** 08-Jan-2017
**Bypass:** Watts LF919QT 3/4" (H)
**Shutoffs:** (zzz)
**Notes:** Lead free compliant version identified with NSF61 mark on meter

---

**Type:** RPDA
**Manufacturer:** Ames
**Model:** LFColt 500ZGV
**Size:** 3
**Orientation:** VUVD
**Meters:** (O)
**Manual:** 9
**0.25% Pb:** Yes
**Spare Parts Only:** No
**Approved:** 08-Jan-2014
**Renewed:** 08-Jan-2017
**Bypass:** Watts LF919QT 3/4" (H)
**Shutoffs:** (zzz)
**Notes:** Lead free compliant version identified with NSF61 mark on meter

---

**Type:** RPDA
**Manufacturer:** Ames
**Model:** LFColt 500ZGV
**Size:** 4
**Orientation:** VUVD
**Meters:** (O)
**Manual:** 9
**0.25% Pb:** Yes
**Spare Parts Only:** No
**Approved:** 08-Jan-2014
**Renewed:** 08-Jan-2017
**Bypass:** Watts LF919QT 3/4" (H)
**Shutoffs:** (zzz)
**Notes:** Lead free compliant version identified with NSF61 mark on meter

---

**Type:** RPDA
**Manufacturer:** Ames
**Model:** LFMaxim 500GV
**Size:** 2 1/2
**Orientation:** H
**Meters:** (O)
**Manual:** 9
**0.25% Pb:** Yes
**Spare Parts Only:** No
**Approved:** 08-Jan-2014
**Renewed:** 08-Jan-2017
**Bypass:** Watts LF919QT 3/4" (H)
**Shutoffs:** (zzz)
**Notes:** Lead free compliant version identified with NSF61 mark on meter

---

**Type:** RPDA
**Manufacturer:** Ames
**Model:** LFMaxim 500GV
**Size:** 3
**Orientation:** H
**Meters:** (O)
**Manual:** 9
**0.25% Pb:** Yes
**Spare Parts Only:** No
**Approved:** 08-Jan-2014
**Renewed:** 08-Jan-2017
**Bypass:** Watts LF919QT 3/4" (H)
**Shutoffs:** (zzz)
**Notes:** Lead free compliant version identified with NSF61 mark on meter

**Type:** RPDA
**Manufacturer:** Ames
**Model:** LFMaxim 500GV
**Size:** 4
**Orientation:** H
**Meters:** (O)
**Manual:** 9
**0.25% Pb:** Yes
**Spare Parts Only:** No
**Approved:** 08-Jan-2014
**Renewed:** 08-Jan-2017
**Bypass:** Watts LF919QT 3/4" (H)
**Shutoffs:** (zzz)
**Notes:** Lead free compliant version identified with NSF61 mark on meter

---

**Type:** RPDA
**Manufacturer:** Ames
**Model:** LFMaxim 500GV
**Size:** 6
**Orientation:** H
**Meters:** (M)
**Manual:** 9
**0.25% Pb:** Yes
**Spare Parts Only:** No
**Approved:** 13-Aug-2015
**Renewed:** 13-Aug-2018
**Bypass:** Watts LF919QT 3/4" (H)
**Shutoffs:** (zzz)
**Notes:** Lead free compliant version identified with NSF61 mark on meter

---

**Type:** RPDA
**Manufacturer:** Ames
**Model:** LFMaxim 500GV
**Size:** 8
**Orientation:** H
**Meters:** (M)
**Manual:** 9
**0.25% Pb:** Yes
**Spare Parts Only:** No
**Approved:** 12-Oct-2015
**Renewed:** 12-Oct-2018
**Bypass:** Watts LF919QT 3/4" (H)
**Shutoffs:** (zzz)
**Notes:** Lead free compliant version identified with NSF61 mark on meter

---

**Type:** RPDA
**Manufacturer:** Ames
**Model:** LFMaxim 500GV
**Size:** 10
**Orientation:** H
**Meters:** (M)
**Manual:** 9
**0.25% Pb:** Yes
**Spare Parts Only:** No
**Approved:** 12-Oct-2015
**Renewed:** 12-Oct-2018
**Bypass:** Watts LF919QT 3/4" (H)
**Shutoffs:** (zzz)
**Notes:** Lead free compliant version identified with NSF61 mark on meter

---

**Type:** RPDA
**Manufacturer:** Ames
**Model:** LFMaxim 500NBF
**Size:** 2 1/2
**Orientation:** VUVD
**Meters:** (O)
**Manual:** 9
**0.25% Pb:** Yes
**Spare Parts Only:** No
**Approved:** 08-Jan-2014
**Renewed:** 08-Jan-2017
**Bypass:** Watts LF919QT 3/4" (H)
**Shutoffs:** (zzz)
**Notes:** Lead free compliant version identified with NSF61 mark on meter

---

**Type:** RPDA
**Manufacturer:** Ames
**Model:** LFMaxim 500NBF
**Size:** 3
**Orientation:** VUVD
**Meters:** (O)
**Manual:** 9
**0.25% Pb:** Yes
**Spare Parts Only:** No
**Approved:** 08-Jan-2014
**Renewed:** 08-Jan-2017
**Bypass:** Watts LF919QT 3/4" (H)
**Shutoffs:** (zzz)
**Notes:** Lead free compliant version identified with NSF61 mark on meter


2018 © University of Southern California

**Type:** RPDA
**Manufacturer:** Ames
**Model:** LFMaxim 500NGV
**Size:** 2 1/2
**Orientation:** VUVD
**Meters:** (O)
**Manual:** 9
**0.25% Pb:** Yes
**Spare Parts Only:** No
**Approved:** 08-Jan-2014
**Renewed:** 08-Jan-2017
**Bypass:** Watts LF919QT 3/4" (H)
**Shutoffs:** (zzz)
**Notes:** Lead free compliant version identified with NSF61 mark on meter

---

**Type:** RPDA
**Manufacturer:** Ames
**Model:** LFMaxim 500NGV
**Size:** 3
**Orientation:** VUVD
**Meters:** (O)
**Manual:** 9
**0.25% Pb:** Yes
**Spare Parts Only:** No
**Approved:** 08-Jan-2014
**Renewed:** 08-Jan-2017
**Bypass:** Watts LF919QT 3/4" (H)
**Shutoffs:** (zzz)
**Notes:** Lead free compliant version identified with NSF61 mark on meter

---

**Type:** RPDA
**Manufacturer:** Ames
**Model:** LFMaxim 500ZBF
**Size:** 2 1/2
**Orientation:** VUVD
**Meters:** (O)
**Manual:** 9
**0.25% Pb:** Yes
**Spare Parts Only:** No
**Approved:** 08-Jan-2014
**Renewed:** 08-Jan-2017
**Bypass:** Watts LF919QT 3/4" (H)
**Shutoffs:** (zzz)
**Notes:** Lead free compliant version identified with NSF61 mark on meter

---

**Type:** RPDA
**Manufacturer:** Ames
**Model:** LFMaxim 500ZBF
**Size:** 3
**Orientation:** VUVD
**Meters:** (O)
**Manual:** 9
**0.25% Pb:** Yes
**Spare Parts Only:** No
**Approved:** 08-Jan-2014
**Renewed:** 08-Jan-2017
**Bypass:** Watts LF919QT 3/4" (H)
**Shutoffs:** (zzz)
**Notes:** Lead free compliant version identified with NSF61 mark on meter

---

**Type:** RPDA
**Manufacturer:** Ames
**Model:** LFMaxim 500ZGV
**Size:** 2 1/2
**Orientation:** VUVD
**Meters:** (O)
**Manual:** 9
**0.25% Pb:** Yes
**Spare Parts Only:** No
**Approved:** 08-Jan-2014
**Renewed:** 08-Jan-2017
**Bypass:** Watts LF919QT 3/4" (H)
**Shutoffs:** (zzz)
**Notes:** Lead free compliant version identified with NSF61 mark on meter

---

**Type:** RPDA
**Manufacturer:** Ames
**Model:** LFMaxim 500ZGV
**Size:** 3
**Orientation:** VUVD
**Meters:** (O)
**Manual:** 9
**0.25% Pb:** Yes
**Spare Parts Only:** No
**Approved:** 08-Jan-2014
**Renewed:** 08-Jan-2017
**Bypass:** Watts LF919QT 3/4" (H)
**Shutoffs:** (zzz)
**Notes:** Lead free compliant version identified with NSF61 mark on meter

**Type:** RPDA
**Size:** 2 1/2
**Manual:** 9
**Approved:** 20-Jun-2006
**Shutoffs:** (zzz)
**Manufacturer:** Ames
**Orientation:** H
**0.25% Pb:** No
**Renewed:** 20-Jun-2018
**Model:** Maxim 500-GV
**Meters:** (N),H,I,J,K,L,M,N,O,P,Q
**Spare Parts Only:** No
**Bypass:** Watts 919QT 3/4" (H)

---

**Type:** RPDA
**Size:** 3
**Manual:** 9
**Approved:** 20-Jun-2006
**Shutoffs:** (zzz)
**Manufacturer:** Ames
**Orientation:** H
**0.25% Pb:** No
**Renewed:** 20-Jun-2018
**Model:** Maxim 500-GV
**Meters:** (N),H,I,J,K,L,M,N,O,P,Q
**Spare Parts Only:** No
**Bypass:** Watts 919QT 3/4" (H)

---

**Type:** RPDA
**Size:** 4
**Manual:** 9
**Approved:** 20-Jun-2006
**Shutoffs:** (zzz)
**Manufacturer:** Ames
**Orientation:** H
**0.25% Pb:** No
**Renewed:** 20-Jun-2018
**Model:** Maxim 500-GV
**Meters:** (N),H,I,J,K,L,M,N,O,P,Q
**Spare Parts Only:** No
**Bypass:** Watts 919QT 3/4" (H)

---

**Type:** RPDA
**Size:** 6
**Manual:** 9
**Approved:** 15-Nov-2010
**Shutoffs:** (zzz)
**Manufacturer:** Ames
**Orientation:** H
**0.25% Pb:** No
**Renewed:** 15-Nov-2016
**Model:** Maxim 500-GV
**Meters:** (N),H,I,J,K,L,M,N,O,P,Q
**Spare Parts Only:** No
**Bypass:** Watts 919QT 3/4" (H)

---

**Type:** RPDA
**Size:** 8
**Manual:** 9
**Approved:** 27-Sep-2010
**Shutoffs:** (zzz)
**Manufacturer:** Ames
**Orientation:** H
**0.25% Pb:** No
**Renewed:** 27-Sep-2016
**Model:** Maxim 500-GV
**Meters:** (N),H,I,J,K,L,M,N,O,P,Q
**Spare Parts Only:** No
**Bypass:** Watts 919QT 3/4" (H)

---

**Type:** RPDA
**Size:** 10
**Manual:** 9
**Approved:** 27-Sep-2010
**Shutoffs:** (zzz)
**Manufacturer:** Ames
**Orientation:** H
**0.25% Pb:** No
**Renewed:** 27-Sep-2016
**Model:** Maxim 500-GV
**Meters:** (N),H,I,J,K,L,M,N,O,P,Q
**Spare Parts Only:** No
**Bypass:** Watts 919QT 3/4" (H)

---

**Type:** RPDA
**Size:** 2 1/2
**Manual:** 9
**Approved:** 24-Jun-2013
**Shutoffs:** (yyy)
**Manufacturer:** Ames
**Orientation:** VUVD
**0.25% Pb:** No
**Renewed:** 24-Jun-2016
**Model:** Maxim 500NBF
**Meters:** (N),H,I,J,K,L,M,N,O,P,Q
**Spare Parts Only:** No
**Bypass:** Watts 919QT 3/4" (H)


2018 © University of Southern California

**Type:** RPDA
**Size:** 3
**Manual:** 9
**Approved:** 07-Apr-2009
**Shutoffs:** (yyy)
**Manufacturer:** Ames
**Orientation:** VUVD
**0.25% Pb:** No
**Renewed:** 07-Apr-2018
**Model:** Maxim 500NBF
**Meters:** (N),H,I,J,K,L,M,N,O,P,Q
**Spare Parts Only:** No
**Bypass:** Watts 919QT 3/4" (H)

---

**Type:** RPDA
**Size:** 4
**Manual:** 9
**Approved:** 15-Nov-2010
**Shutoffs:** (yyy)
**Manufacturer:** Ames
**Orientation:** VUVD
**0.25% Pb:** No
**Renewed:** 15-Nov-2016
**Model:** Maxim 500NBF
**Meters:** (N),H,I,J,K,L,M,N,O,P,Q
**Spare Parts Only:** No
**Bypass:** Watts 919QT 3/4" (H)

---

**Type:** RPDA
**Size:** 6
**Manual:** 9
**Approved:** 14-Jun-2013
**Shutoffs:** (yyy)
**Manufacturer:** Ames
**Orientation:** VUVD
**0.25% Pb:** No
**Renewed:** 14-Jun-2016
**Model:** Maxim 500NBF
**Meters:** (N),H,I,J,K,L,M,N,O,P,Q
**Spare Parts Only:** No
**Bypass:** Watts 919QT 3/4" (H)

---

**Type:** RPDA
**Size:** 2 1/2
**Manual:** 9
**Approved:** 07-Apr-2009
**Shutoffs:** (zzz)
**Manufacturer:** Ames
**Orientation:** VUVD
**0.25% Pb:** No
**Renewed:** 07-Apr-2018
**Model:** Maxim 500NGV
**Meters:** (N),H,I,J,K,L,M,N,O,P,Q
**Spare Parts Only:** No
**Bypass:** Watts 919QT 3/4" (H)

---

**Type:** RPDA
**Size:** 3
**Manual:** 9
**Approved:** 07-Apr-2009
**Shutoffs:** (zzz)
**Manufacturer:** Ames
**Orientation:** VUVD
**0.25% Pb:** No
**Renewed:** 07-Apr-2018
**Model:** Maxim 500NGV
**Meters:** (N),H,I,J,K,L,M,N,O,P,Q
**Spare Parts Only:** No
**Bypass:** Watts 919QT 3/4" (H)

---

**Type:** RPDA
**Size:** 4
**Manual:** 9
**Approved:** 15-Nov-2010
**Shutoffs:** (zzz)
**Manufacturer:** Ames
**Orientation:** VUVD
**0.25% Pb:** No
**Renewed:** 15-Nov-2016
**Model:** Maxim 500NGV
**Meters:** (N),H,I,J,K,L,M,N,O,P,Q
**Spare Parts Only:** No
**Bypass:** Watts 919QT 3/4" (H)

---

**Type:** RPDA
**Size:** 6
**Manual:** 9
**Approved:** 14-Jun-2013
**Shutoffs:** (zzz)
**Manufacturer:** Ames
**Orientation:** VUVD
**0.25% Pb:** No
**Renewed:** 14-Jun-2016
**Model:** Maxim 500NGV
**Meters:** (N),H,I,J,K,L,M,N,O,P,Q
**Spare Parts Only:** No
**Bypass:** Watts 919QT 3/4" (H)

**Type:** RPDA
**Size:** 2 1/2
**Manual:** 9
**Approved:** 24-Jun-2013
**Shutoffs:** (yyy)
**Manufacturer:** Ames
**Orientation:** VUVU
**0.25% Pb:** No
**Renewed:** 24-Jun-2016
**Model:** Maxim 500ZBF
**Meters:** (N),H,I,J,K,L,M,N,O,P,Q
**Spare Parts Only:** No
**Bypass:** Watts 919QT 3/4" (H)

---

**Type:** RPDA
**Size:** 3
**Manual:** 9
**Approved:** 24-Jun-2013
**Shutoffs:** (yyy)
**Manufacturer:** Ames
**Orientation:** VUVU
**0.25% Pb:** No
**Renewed:** 24-Jun-2016
**Model:** Maxim 500ZBF
**Meters:** (N),H,I,J,K,L,M,N,O,P,Q
**Spare Parts Only:** No
**Bypass:** Watts 919QT 3/4" (H)

---

**Type:** RPDA
**Size:** 6
**Manual:** 9
**Approved:** 14-Jun-2013
**Shutoffs:** (yyy)
**Manufacturer:** Ames
**Orientation:** VUVU
**0.25% Pb:** No
**Renewed:** 14-Jun-2016
**Model:** Maxim 500ZBF
**Meters:** (N),H,I,J,K,L,M,N,O,P,Q
**Spare Parts Only:** No
**Bypass:** Watts 919QT 3/4" (H)

---

**Type:** RPDA
**Size:** 2 1/2
**Manual:** 9
**Approved:** 24-Jun-2013
**Shutoffs:** (zzz)
**Manufacturer:** Ames
**Orientation:** VUVU
**0.25% Pb:** No
**Renewed:** 24-Jun-2016
**Model:** Maxim 500ZGV
**Meters:** (N),H,I,J,K,L,M,N,O,P,Q
**Spare Parts Only:** No
**Bypass:** Watts 919QT 3/4" (H)

---

**Type:** RPDA
**Size:** 3
**Manual:** 9
**Approved:** 24-Jun-2013
**Shutoffs:** (zzz)
**Manufacturer:** Ames
**Orientation:** VUVU
**0.25% Pb:** No
**Renewed:** 24-Jun-2016
**Model:** Maxim 500ZGV
**Meters:** (N),H,I,J,K,L,M,N,O,P,Q
**Spare Parts Only:** No
**Bypass:** Watts 919QT 3/4" (H)

---

**Type:** RPDA
**Size:** 6
**Manual:** 9
**Approved:** 14-Jun-2013
**Shutoffs:** (zzz)
**Manufacturer:** Ames
**Orientation:** VUVU
**0.25% Pb:** No
**Renewed:** 14-Jun-2016
**Model:** Maxim 500ZGV
**Meters:** (N),H,I,J,K,L,M,N,O,P,Q
**Spare Parts Only:** No
**Bypass:** Watts 919QT 3/4" (H)

---

**Type:** RPDA
**Size:** 3
**Manual:**
**Approved:**
**Manufacturer:** Apollo/Conbraco
**Orientation:**
**0.25% Pb:** No
**Renewed:**
**Model:** 4070003
**Meters:**
**Spare Parts Only:** No
**Bypass:**
**Notes:** model designation changed to RPDA40


2018 © University of Southern California

**Type:** RPDA
**Manufacturer:** Apollo/Conbraco
**Model:** 40700C3
**Size:** 3
**Orientation:**
**Meters:**
**Manual:**
**0.25% Pb:** No
**Spare Parts Only:** No
**Approved:**
**Renewed:**
**Bypass:**
**Notes:** model designation changed to RPDA40

---

**Type:** RPDA
**Manufacturer:** Apollo/Conbraco
**Model:** 40700C3
**Size:** 3
**Orientation:**
**Meters:**
**Manual:**
**0.25% Pb:** No
**Spare Parts Only:** No
**Approved:**
**Renewed:**
**Bypass:**
**Notes:** model designation changed to RPDA40

---

**Type:** RPDA
**Manufacturer:** Apollo/Conbraco
**Model:** 4070A03
**Size:** 4
**Orientation:**
**Meters:**
**Manual:**
**0.25% Pb:** No
**Spare Parts Only:** No
**Approved:**
**Renewed:**
**Bypass:**
**Notes:** model designation changed to RPDA40

---

**Type:** RPDA
**Manufacturer:** Apollo/Conbraco
**Model:** 4070AE3
**Size:** 4
**Orientation:**
**Meters:**
**Manual:**
**0.25% Pb:** No
**Spare Parts Only:** No
**Approved:**
**Renewed:**
**Bypass:**
**Notes:** model designation changed to RPDA40

---

**Type:** RPDA
**Manufacturer:** Apollo/Conbraco
**Model:** 4070C03
**Size:** 6
**Orientation:**
**Meters:**
**Manual:**
**0.25% Pb:** No
**Spare Parts Only:** No
**Approved:**
**Renewed:**
**Bypass:**
**Notes:** model designation changed to RPDA40

---

**Type:** RPDA
**Manufacturer:** Apollo/Conbraco
**Model:** 4070CC3
**Size:** 6
**Orientation:**
**Meters:**
**Manual:**
**0.25% Pb:** No
**Spare Parts Only:** No
**Approved:**
**Renewed:**
**Bypass:**
**Notes:** model designation changed to RPDA40

---

**Type:** RPDA
**Manufacturer:** Apollo/Conbraco
**Model:** 4070CE3
**Size:** 6
**Orientation:**
**Meters:**
**Manual:**
**0.25% Pb:** No
**Spare Parts Only:** No
**Approved:**
**Renewed:**
**Bypass:**
**Notes:** model designation changed to RPDA40

**Type:** RPDA
**Manufacturer:** Apollo/Conbraco
**Model:** 4070E03
**Size:** 8
**Orientation:**
**Meters:**
**Manual:**
**0.25% Pb:** No
**Spare Parts Only:** No
**Approved:**
**Renewed:**
**Bypass:**
**Notes:** model designation changed to RPDA40

---

**Type:** RPDA
**Manufacturer:** Apollo/Conbraco
**Model:** 4070EC3
**Size:** 8
**Orientation:**
**Meters:**
**Manual:**
**0.25% Pb:** No
**Spare Parts Only:** No
**Approved:**
**Renewed:**
**Bypass:**
**Notes:** model designation changed to RPDA40

---

**Type:** RPDA
**Manufacturer:** Apollo/Conbraco
**Model:** 4070EE3
**Size:** 8
**Orientation:**
**Meters:**
**Manual:**
**0.25% Pb:** No
**Spare Parts Only:** No
**Approved:**
**Renewed:**
**Bypass:**
**Notes:** model designation changed to RPDA40

---

**Type:** RPDA
**Manufacturer:** Apollo/Conbraco
**Model:** 4070G03
**Size:** 10
**Orientation:**
**Meters:**
**Manual:**
**0.25% Pb:** No
**Spare Parts Only:** No
**Approved:**
**Renewed:**
**Bypass:**
**Notes:** model designation changed to RPDA40

---

**Type:** RPDA
**Manufacturer:** Apollo/Conbraco
**Model:** 4070GC3
**Size:** 10
**Orientation:**
**Meters:**
**Manual:**
**0.25% Pb:** No
**Spare Parts Only:** No
**Approved:**
**Renewed:**
**Bypass:**
**Notes:** model designation changed to RPDA40

---

**Type:** RPDA
**Manufacturer:** Apollo/Conbraco
**Model:** 4070GE3
**Size:** 10
**Orientation:**
**Meters:**
**Manual:**
**0.25% Pb:** No
**Spare Parts Only:** No
**Approved:**
**Renewed:**
**Bypass:**
**Notes:** model designation changed to RPDA40

---

**Type:** RPDA
**Manufacturer:** Apollo/Conbraco
**Model:** 407AC3
**Size:** 4
**Orientation:**
**Meters:**
**Manual:**
**0.25% Pb:** No
**Spare Parts Only:** No
**Approved:**
**Renewed:**
**Bypass:**
**Notes:** model designation changed to RPDA40


2018 © University of Southern California

**Type:** RPDA
**Manufacturer:** Apollo/Conbraco
**Model:** RPDALF4A
**Size:** 2 1/2
**Orientation:** H
**Meters:** (P),O
**Manual:** 10
**0.25% Pb:** Yes
**Spare Parts Only:** No
**Approved:** 10-Jun-2014
**Renewed:** 10-Jun-2017
**Bypass:** Apollo RPLF4A 1/2" (H)
**Shutoffs:** (yyy), cccc, dddd, mmmm, nnnn, xxxxx, yyyyy, zzzzz, aaaaaa

---

**Type:** RPDA
**Manufacturer:** Apollo/Conbraco
**Model:** RPDALF4A
**Size:** 3
**Orientation:** H
**Meters:** (P),O
**Manual:** 10
**0.25% Pb:** Yes
**Spare Parts Only:** No
**Approved:** 10-Jun-2014
**Renewed:** 10-Jun-2017
**Bypass:** Apollo RPLF4A 1/2" (H)
**Shutoffs:** (yyy), cccc, dddd, mmmm, nnnn, xxxxx, yyyyy, zzzzz, aaaaaa

---

**Type:** RPDA
**Manufacturer:** Apollo/Conbraco
**Model:** RPDALF4A
**Size:** 4
**Orientation:** H
**Meters:** (P),G,H,I,J,K,L,M,N,O,Q,T
**Manual:** 10
**0.25% Pb:** Yes
**Spare Parts Only:** No
**Approved:** 24-Jun-2013
**Renewed:** 24-Jun-2016
**Bypass:** Apollo RPLF4A 1/2" (H)
**Shutoffs:** (yyy), cccc, dddd, mmmm, nnnn, xxxxx, yyyyy, zzzzz, aaaaaa

---

**Type:** RPDA
**Manufacturer:** Apollo/Conbraco
**Model:** RPDALF4A
**Size:** 6
**Orientation:** H
**Meters:** (P),G,H,I,J,K,L,M,N,O,Q,T
**Manual:** 10
**0.25% Pb:** Yes
**Spare Parts Only:** No
**Approved:** 24-Jun-2013
**Renewed:** 24-Jun-2016
**Bypass:** Apollo RPLF4A 1/2" (H)
**Shutoffs:** (yyy), cccc, dddd, mmmm, nnnn, xxxxx, yyyyy, zzzzz, aaaaaa

---

**Type:** RPDA
**Manufacturer:** Apollo/Conbraco
**Model:** RPDALF4A
**Size:** 8
**Orientation:** H
**Meters:** (M),G,H,I,J,K,L,N,O,P,Q,T
**Manual:** 10
**0.25% Pb:** Yes
**Spare Parts Only:** No
**Approved:** 22-Feb-2018
**Renewed:**
**Bypass:** Apollo RPLF4A 1/2" (H)
**Shutoffs:** (yyy), cccc, dddd, mmmm, nnnn, xxxxx, yyyyy, zzzzz, aaaaaa

---

**Type:** RPDA
**Manufacturer:** Apollo/Conbraco
**Model:** RPDALF4AN
**Size:** 2 1/2
**Orientation:** VUVD
**Meters:** (M),G,H,I,J,K,L,N,O,P,Q,T
**Manual:** 10
**0.25% Pb:** Yes
**Spare Parts Only:** No
**Approved:** 12-May-2016
**Renewed:**
**Bypass:** Apollo RPLF4A 1/2" (H)
**Shutoffs:** (yyy), cccc, dddd, mmmm, nnnn, xxxxx, yyyyy, zzzzz, aaaaaa

---

**Type:** RPDA
**Manufacturer:** Apollo/Conbraco
**Model:** RPDALF4AN
**Size:** 2 1/2
**Orientation:** VUVU
**Meters:** (M),G,H,I,J,K,L,N,O,P,Q,T
**Manual:** 10
**0.25% Pb:** Yes
**Spare Parts Only:** No
**Approved:** 12-May-2016
**Renewed:**
**Bypass:** Apollo RPLF4A 1/2" (H)
**Shutoffs:** (yyy), cccc, dddd, mmmm, nnnn, xxxxx, yyyyy, zzzzz, aaaaaa

**Type:** RPDA
**Manufacturer:** Apollo/Conbraco
**Model:** RPDALF4AN
**Size:** 3
**Orientation:** VUVD
**Meters:** (M),G,H,I,J,K,L,N,O,P,Q,T
**Manual:** 10
**0.25% Pb:** Yes
**Spare Parts Only:** No
**Approved:** 12-May-2016
**Renewed:**
**Bypass:** Apollo RPLF4A 1/2" (H)
**Shutoffs:** (yyy), cccc, dddd, mmmm, nnnn, xxxxx, yyyyy, zzzzz, aaaaaa

---

**Type:** RPDA
**Manufacturer:** Apollo/Conbraco
**Model:** RPDALF4AN
**Size:** 3
**Orientation:** VUVU
**Meters:** (M),G,H,I,J,K,L,N,O,P,Q,T
**Manual:** 10
**0.25% Pb:** Yes
**Spare Parts Only:** No
**Approved:** 12-May-2016
**Renewed:**
**Bypass:** Apollo RPLF4A 1/2" (H)
**Shutoffs:** (yyy), cccc, dddd, mmmm, nnnn, xxxxx, yyyyy, zzzzz, aaaaaa

---

**Type:** RPDA
**Manufacturer:** Apollo/Conbraco
**Model:** RPDALF4AN
**Size:** 4
**Orientation:** VUVD
**Meters:** (P),G,H,I,J,K,L,M,N,O,Q,T
**Manual:** 10
**0.25% Pb:** Yes
**Spare Parts Only:** No
**Approved:** 10-Jun-2014
**Renewed:** 10-Jun-2017
**Bypass:** Apollo RPLF4A 1/2" (H)
**Shutoffs:** (yyy), cccc, dddd, mmmm, nnnn, xxxxx, yyyyy, zzzzz, aaaaaa

---

**Type:** RPDA
**Manufacturer:** Apollo/Conbraco
**Model:** RPDALF4AN
**Size:** 4
**Orientation:** VUVU
**Meters:** (P),G,H,I,J,K,L,M,N,O,Q,T
**Manual:** 10
**0.25% Pb:** Yes
**Spare Parts Only:** No
**Approved:** 11-Jun-2014
**Renewed:** 11-Jun-2017
**Bypass:** Apollo RPLF4A 1/2" (H)
**Shutoffs:** (yyy), cccc, dddd, mmmm, nnnn, xxxxx, yyyyy, zzzzz, aaaaaa

---

**Type:** RPDA
**Manufacturer:** Apollo/Conbraco
**Model:** RPDALF4AN
**Size:** 6
**Orientation:** VUVD
**Meters:** (M),G,H,I,J,K,L,N,O,P,Q,T
**Manual:** 10
**0.25% Pb:** Yes
**Spare Parts Only:** No
**Approved:** 12-May-2015
**Renewed:** 12-May-2018
**Bypass:** Apollo RPLF4A 1/2" (H)
**Shutoffs:** (yyy), cccc, dddd, mmmm, nnnn, xxxxx, yyyyy, zzzzz, aaaaaa

---

**Type:** RPDA
**Manufacturer:** Apollo/Conbraco
**Model:** RPDALF4AN
**Size:** 6
**Orientation:** VUVU
**Meters:** (M),G,H,I,J,K,L,N,O,P,Q,T
**Manual:** 10
**0.25% Pb:** Yes
**Spare Parts Only:** No
**Approved:** 12-May-2015
**Renewed:** 12-May-2018
**Bypass:** Apollo RPLF4A 1/2" (H)
**Shutoffs:** (yyy), cccc, dddd, mmmm, nnnn, xxxxx, yyyyy, zzzzz, aaaaaa

---

**Type:** RPDA
**Manufacturer:** Apollo/Conbraco
**Model:** RPDALF4AN
**Size:** 8
**Orientation:** VUVD
**Meters:** (M),G,H,I,J,K,L,N,O,P,Q,T
**Manual:** 10
**0.25% Pb:** Yes
**Spare Parts Only:** No
**Approved:** 22-Feb-2018
**Renewed:**
**Bypass:** Apollo RPLF4A 1/2" (H)
**Shutoffs:** (yyy), cccc, dddd, mmmm, nnnn, xxxxx, yyyyy, zzzzz, aaaaaa


2018 © University of Southern California

**Type:** RPDA
**Manufacturer:** Apollo/Conbraco
**Model:** RPDALF4AN
**Size:** 8
**Orientation:** VUVU
**Meters:** (M),G,H,I,J,K,L,N,O,P,Q,T
**Manual:** 10
**0.25% Pb:** Yes
**Spare Parts Only:** No
**Approved:** 22-Feb-2018
**Renewed:**
**Bypass:** Apollo RPLF4A 1/2" (H)
**Shutoffs:** (yyy), cccc, dddd, mmmm, nnnn, xxxxx, yyyyy, zzzzz, aaaaaa

---

**Type:** RPDA
**Manufacturer:** Apollo/Conbraco
**Model:** RPDALF4AR
**Size:** 2 1/2
**Orientation:** H
**Meters:** (M),G,H,I,J,K,L,N,O,Q,T
**Manual:** 10
**0.25% Pb:** Yes
**Spare Parts Only:** No
**Approved:** 21-Dec-2015
**Renewed:**
**Bypass:** Apollo RPLF4A 1/2"
**Shutoffs:** (cccc), dddd, mmmm, nnnn, xxxxx, yyyyy, zzzzz, aaaaaa
**Notes:** Integral Stainless Steel grooved spool between the #2 ck and #2 SOV - assembly length: min. 34" and max. 47 1/8"

---

**Type:** RPDA
**Manufacturer:** Apollo/Conbraco
**Model:** RPDALF4AR
**Size:** 3
**Orientation:** H
**Meters:** (M),G,H,I,J,K,L,N,O,Q,T
**Manual:** 10
**0.25% Pb:** Yes
**Spare Parts Only:** No
**Approved:** 21-Dec-2015
**Renewed:**
**Bypass:** Apollo RPLF4A 1/2"
**Shutoffs:** (cccc), dddd, mmmm, nnnn, xxxxx, yyyyy, zzzzz, aaaaaa
**Notes:** Integral Stainless Steel grooved spool between the #2 ck and #2 SOV - assembly length: min. 35" and max. 48 1/8"

---

**Type:** RPDA
**Manufacturer:** Apollo/Conbraco
**Model:** RPDALF4AR
**Size:** 4
**Orientation:** H
**Meters:** (M),G,H,I,J,K,L,N,O,Q,T
**Manual:** 10
**0.25% Pb:** Yes
**Spare Parts Only:** No
**Approved:** 21-Dec-2015
**Renewed:**
**Bypass:** Apollo RPLF4A 1/2"
**Shutoffs:** (cccc), dddd, mmmm, nnnn, xxxxx, yyyyy, zzzzz, aaaaaa
**Notes:** Integral Stainless Steel grooved spool between the #2 ck and #2 SOV - assembly length: min. 37 3/8" and max. 62 1/4"

---

**Type:** RPDA
**Manufacturer:** Apollo/Conbraco
**Model:** RPDALF4AR
**Size:** 6
**Orientation:** H
**Meters:** (M),G,H,I,J,K,L,N,O,Q,T
**Manual:** 10
**0.25% Pb:** Yes
**Spare Parts Only:** No
**Approved:** 21-Dec-2015
**Renewed:**
**Bypass:** Apollo RPLF4A 1/2"
**Shutoffs:** (cccc), dddd, mmmm, nnnn, xxxxx, yyyyy, zzzzz, aaaaaa
**Notes:** Integral Stainless Steel grooved spool between the #2 ck and #2 SOV - assembly length: min. 46" and max. 71 1/4"

**Type:** RPDA
**Manufacturer:** Apollo/Conbraco
**Model:** RPDALF4AR
**Size:** 8
**Orientation:** H
**Meters:** (M),G,H,I,J,K,L,N,O,P,Q,T
**Manual:** 10
**0.25% Pb:** Yes
**Spare Parts Only:** No
**Approved:** 22-Feb-2018
**Renewed:**
**Bypass:** Apollo RPLF4A 1/2" (H)
**Shutoffs:** (xxxxx), cccc, dddd, mmmm, nnnn, yyyyy, zzzzz, aaaaaa
**Notes:** Integral Stainless Steel grooved spool between the #2 ck and #2 SOV - assembly length: min. 55 3/4" and max. 86"

---

**Type:** RPDA
**Manufacturer:** Cla-Val
**Model:** 18-4
**Size:** 10
**Orientation:** H
**Meters:** (H),A,B,C,D,E,F,G,I,J,K,L,M,N,O,P,Q,T
**Manual:** 8
**0.25% Pb:** No
**Spare Parts Only:** Yes
**Approved:** 23-Aug-1990
**Renewed:** 23-Aug-2017
**Bypass:** Cla-Val RP2 3/4 (H)
**Shutoffs:** hh,gg,qq,rr

---

**Type:** RPDA
**Manufacturer:** Conbraco
**Model:**
**Size:**
**Orientation:**
**Meters:**
**Manual:**
**0.25% Pb:** No
**Spare Parts Only:** No
**Approved:**
**Renewed:**
**Bypass:**
**Notes:** See Apollo/Conbraco

---

**Type:** RPDA
**Manufacturer:** Febco
**Model:** 826 Type YD
**Size:** 2 1/2
**Orientation:**
**Meters:**
**Manual:**
**0.25% Pb:** No
**Spare Parts Only:** No
**Approved:**
**Renewed:**
**Bypass:**
**Notes:** model designation changed to 826YD

---

**Type:** RPDA
**Manufacturer:** Febco
**Model:** 826 Type YD
**Size:** 3
**Orientation:**
**Meters:**
**Manual:**
**0.25% Pb:** No
**Spare Parts Only:** No
**Approved:**
**Renewed:**
**Bypass:**
**Notes:** model designation changed to 826YD

---

**Type:** RPDA
**Manufacturer:** Febco
**Model:** 826 Type YD
**Size:** 4
**Orientation:**
**Meters:**
**Manual:**
**0.25% Pb:** No
**Spare Parts Only:** No
**Approved:**
**Renewed:**
**Bypass:**
**Notes:** model designation changed to 826YD


2018 © University of Southern California

**Type:** RPDA
**Manufacturer:** Febco
**Model:** 826 Type YD
**Size:** 6
**Orientation:**
**Meters:**
**Manual:**
**0.25% Pb:** No
**Spare Parts Only:** No
**Approved:**
**Renewed:**
**Bypass:**
**Notes:** model designation changed to 826YD

---

**Type:** RPDA
**Manufacturer:** Febco
**Model:** 826 Type YD
**Size:** 8
**Orientation:**
**Meters:**
**Manual:**
**0.25% Pb:** No
**Spare Parts Only:** No
**Approved:**
**Renewed:**
**Bypass:**
**Notes:** model designation changed to 826YD

---

**Type:** RPDA
**Manufacturer:** Febco
**Model:** 826 Type YD
**Size:** 10
**Orientation:**
**Meters:**
**Manual:**
**0.25% Pb:** No
**Spare Parts Only:** No
**Approved:**
**Renewed:**
**Bypass:**
**Notes:** model designation changed to 826YD

---

**Type:** RPDA
**Manufacturer:** Febco
**Model:** 826YD
**Size:** 2 1/2
**Orientation:** H
**Meters:** (M),B,C,D,E,F,G,H,I,J,K,L,N,O,P,Q,T
**Manual:** 8
**0.25% Pb:** No
**Spare Parts Only:** Yes
**Approved:** 11-Nov-1988
**Renewed:** 11-Nov-2015
**Bypass:** Febco 825Y 3/4 (H)
**Shutoffs:** (ff),mm,oo,pp,uu,zzz,ffff,gggg
**Notes:** formerly 826 Type YD

---

**Type:** RPDA
**Manufacturer:** Febco
**Model:** 826YD
**Size:** 3
**Orientation:** H
**Meters:** (M),B,C,D,E,F,G,H,I,J,K,L,N,O,P,Q,T
**Manual:** 8
**0.25% Pb:** No
**Spare Parts Only:** Yes
**Approved:** 11-Nov-1988
**Renewed:** 11-Nov-2015
**Bypass:** Febco 825Y 3/4 (H)
**Shutoffs:** (ff),mm,oo,pp,uu,zzz,ffff,gggg
**Notes:** formerly 826 Type YD

---

**Type:** RPDA
**Manufacturer:** Febco
**Model:** 826YD
**Size:** 4
**Orientation:** H
**Meters:** (M),B,C,D,E,F,G,H,I,J,K,L,N,O,P,Q,T
**Manual:** 8
**0.25% Pb:** No
**Spare Parts Only:** Yes
**Approved:** 14-Oct-1988
**Renewed:** 14-Oct-2018
**Bypass:** Febco 825Y 3/4 (H)
**Shutoffs:** (ff),mm,oo,pp,uu,zzz,ffff,gggg
**Notes:** formerly 826 Type YD

**Type:** RPDA
**Manufacturer:** Febco
**Model:** 826YD
**Size:** 6
**Orientation:** H
**Meters:** (M),B,C,D,E,F,G,H,I,J,K,L,N,O,P,Q,T
**Manual:** 8
**0.25% Pb:** No
**Spare Parts Only:** Yes
**Approved:** 01-Mar-1990
**Renewed:** 01-Mar-2017
**Bypass:** Febco 825Y 3/4 (H)
**Shutoffs:** (ff),mm,oo,pp,uu,zzz,ffff,gggg
**Notes:** formerly 826 Type YD

---

**Type:** RPDA
**Manufacturer:** Febco
**Model:** 826YD
**Size:** 8
**Orientation:** H
**Meters:** (M),B,C,D,E,F,G,H,I,J,K,L,N,O,P,Q,T
**Manual:** 8
**0.25% Pb:** No
**Spare Parts Only:** Yes
**Approved:** 22-Jun-1990
**Renewed:** 22-Jun-2017
**Bypass:** Febco 825Y 3/4 (H)
**Shutoffs:** (ff),mm,oo,pp,uu,zzz,ffff,gggg
**Notes:** formerly 826 Type YD

---

**Type:** RPDA
**Manufacturer:** Febco
**Model:** 826YD
**Size:** 10
**Orientation:** H
**Meters:** (M),B,C,D,E,F,G,H,I,J,K,L,N,O,P,Q,T
**Manual:** 8
**0.25% Pb:** No
**Spare Parts Only:** No
**Approved:** 22-Jun-1990
**Renewed:** 22-Jun-2017
**Bypass:** Febco 825Y 3/4 (H)
**Shutoffs:** (ff),mm,oo,pp,uu,zzz,ffff,gggg
**Notes:** formerly 826 Type YD

---

**Type:** RPDA
**Manufacturer:** Neptune
**Model:**
**Size:**
**Orientation:**
**Meters:**
**Manual:**
**0.25% Pb:** No
**Spare Parts Only:** No
**Approved:**
**Renewed:**
**Bypass:**
**Notes:** See Wilkins

---

**Type:** RPDA
**Manufacturer:** Watts
**Model:** 909DDC
**Size:** 6
**Orientation:**
**Meters:**
**Manual:**
**0.25% Pb:** No
**Spare Parts Only:** No
**Approved:**
**Renewed:**
**Bypass:**
**Notes:** model designation changed to 909RPDA

---

**Type:** RPDA
**Manufacturer:** Watts
**Model:** 909DDCM2
**Size:** 3
**Orientation:**
**Meters:**
**Manual:**
**0.25% Pb:** No
**Spare Parts Only:** No
**Approved:**
**Renewed:**
**Bypass:**
**Notes:** model designation changed to 909RPDA


2018 © University of Southern California

**Type:** RPDA
**Manufacturer:** Watts
**Model:** 909RPDA
**Size:** 2 1/2
**Orientation:** H
**Meters:** (H),C,D,E,F,G,I,J,K,L,M,O,P,Q,T
**Manual:** 8
**0.25% Pb:** No
**Spare Parts Only:** No
**Approved:** 16-Jun-1999
**Renewed:** 16-Jun-2017
**Bypass:** Watts 909QT 3/4 (H)
**Shutoffs:** (pp),hh,mm,uu,zz,ffff,gggg

---

**Type:** RPDA
**Manufacturer:** Watts
**Model:** 909RPDA
**Size:** 3
**Orientation:** H
**Meters:** (N),B,C,D,E,F,G,H,I,J,K,L,M,O,P,Q,T
**Manual:** 8
**0.25% Pb:** No
**Spare Parts Only:** No
**Approved:** 05-Oct-1988
**Renewed:** 05-Oct-2018
**Bypass:** Watts 909QT 3/4 (H)
**Shutoffs:** (pp),hh,mm,uu,zz,eee,ffff,gggg
**Notes:** formerly 909DDCM2

---

**Type:** RPDA
**Manufacturer:** Watts
**Model:** 909RPDA
**Size:** 4
**Orientation:** H
**Meters:** (N),B,C,D,E,F,G,H,I,J,K,L,M,O,P,Q,T
**Manual:** 8
**0.25% Pb:** No
**Spare Parts Only:** No
**Approved:** 09-Feb-1988
**Renewed:** 01-Feb-2018
**Bypass:** Watts 909QT 3/4 (H)
**Shutoffs:** (pp),hh,mm,uu,zz,eee,ffff,gggg

---

**Type:** RPDA
**Manufacturer:** Watts
**Model:** 909RPDA
**Size:** 6
**Orientation:** H
**Meters:** (N),B,C,D,E,F,G,H,I,J,K,L,M,O,P,Q,T
**Manual:** 8
**0.25% Pb:** No
**Spare Parts Only:** No
**Approved:** 05-Oct-1988
**Renewed:** 05-Oct-2018
**Bypass:** Watts 909QT 3/4 (H)
**Shutoffs:** (pp),hh,mm,uu,zz,eee,ffff,gggg
**Notes:** formerly 909DDC

---

**Type:** RPDA
**Manufacturer:** Watts
**Model:** 909RPDA
**Size:** 8
**Orientation:** H
**Meters:** (N),B,C,D,E,F,G,H,I,J,K,L,M,O,P,Q,T
**Manual:** 8
**0.25% Pb:** No
**Spare Parts Only:** No
**Approved:** 14-Feb-1988
**Renewed:** 14-Feb-2018
**Bypass:** Watts 909QT 3/4 (H)
**Shutoffs:** (pp),hh,mm,uu,zz,eee,ffff,gggg

**Type:** RPDA
**Manufacturer:** Watts
**Model:** 909RPDA
**Size:** 10
**Orientation:** H
**Meters:** (N),B,C,D,E,F,G,H,I,J,K,L,M,O,P,Q,T
**Manual:** 8
**0.25% Pb:** No
**Spare Parts Only:** No
**Approved:** 15-Feb-1988
**Renewed:** 15-Feb-2018
**Bypass:** Watts 909QT 3/4 (H)
**Shutoffs:** (pp),hh,mm,uu,zz,eee,ffff,gggg

---

**Type:** RPDA
**Manufacturer:** Watts
**Model:** 957NRPDA-BF
**Size:** 2 1/2
**Orientation:** VUVD
**Meters:** (N),H,I,J,K,L,M,N,O,P,Q
**Manual:** 9
**0.25% Pb:** No
**Spare Parts Only:** No
**Approved:** 24-Jun-2013
**Renewed:** 24-Jun-2016
**Bypass:** Watts 919QT 3/4" (H)
**Shutoffs:** (yyy)

---

**Type:** RPDA
**Manufacturer:** Watts
**Model:** 957NRPDA-BF
**Size:** 3
**Orientation:** VUVD
**Meters:** (N),H,I,J,K,L,M,N,O,P,Q
**Manual:** 9
**0.25% Pb:** No
**Spare Parts Only:** No
**Approved:** 07-Apr-2009
**Renewed:** 07-Apr-2018
**Bypass:** Watts 919QT 3/4" (H)
**Shutoffs:** (yyy)

---

**Type:** RPDA
**Manufacturer:** Watts
**Model:** 957NRPDA-BF
**Size:** 4
**Orientation:** VUVD
**Meters:** (N),H,I,J,K,L,M,N,O,P,Q
**Manual:** 9
**0.25% Pb:** No
**Spare Parts Only:** No
**Approved:** 07-Apr-2009
**Renewed:** 07-Apr-2018
**Bypass:** Watts 919QT 3/4" (H)
**Shutoffs:** (yyy)

---

**Type:** RPDA
**Manufacturer:** Watts
**Model:** 957NRPDA-BF
**Size:** 8
**Orientation:** VUVD
**Meters:** (N),H,I,J,K,L,M,N,O,P,Q
**Manual:** 9
**0.25% Pb:** No
**Spare Parts Only:** No
**Approved:** 14-Jun-2013
**Renewed:** 14-Jun-2016
**Bypass:** Watts 919QT 3/4" (H)
**Shutoffs:** (yyy)

---

**Type:** RPDA
**Manufacturer:** Watts
**Model:** 957NRPDA-GV
**Size:** 2 1/2
**Orientation:** VUVD
**Meters:** (N),H,I,J,K,L,M,N,O,P,Q
**Manual:** 9
**0.25% Pb:** No
**Spare Parts Only:** No
**Approved:** 07-Apr-2009
**Renewed:** 07-Apr-2018
**Bypass:** Watts 919QT 3/4" (H)
**Shutoffs:** (zzz)


2018 © University of Southern California

**Type:** RPDA
**Size:** 3
**Manual:** 9
**Approved:** 07-Apr-2009
**Shutoffs:** (zzz)
**Manufacturer:** Watts
**Orientation:** VUVD
**0.25% Pb:** No
**Renewed:** 07-Apr-2018
**Model:** 957NRPDA-GV
**Meters:** (N),H,I,J,K,L,M,N,O,P,Q
**Spare Parts Only:** No
**Bypass:** Watts 919QT 3/4" (H)

---

**Type:** RPDA
**Size:** 4
**Manual:** 9
**Approved:** 07-Apr-2009
**Shutoffs:** (zzz)
**Manufacturer:** Watts
**Orientation:** VUVD
**0.25% Pb:** No
**Renewed:** 07-Apr-2018
**Model:** 957NRPDA-GV
**Meters:** (N),H,I,J,K,L,M,N,O,P,Q
**Spare Parts Only:** No
**Bypass:** Watts 919QT 3/4" (H)

---

**Type:** RPDA
**Size:** 6
**Manual:** 9
**Approved:** 15-Nov-2010
**Shutoffs:** (zzz)
**Manufacturer:** Watts
**Orientation:** VUVD
**0.25% Pb:** No
**Renewed:** 15-Nov-2016
**Model:** 957NRPDA-GV
**Meters:** (N),H,I,J,K,L,M,N,O,P,Q
**Spare Parts Only:** No
**Bypass:** Watts 919QT 3/4" (H)

---

**Type:** RPDA
**Size:** 8
**Manual:** 9
**Approved:** 14-Jun-2013
**Shutoffs:** (zzz)
**Manufacturer:** Watts
**Orientation:** VUVD
**0.25% Pb:** No
**Renewed:** 14-Jun-2016
**Model:** 957NRPDA-GV
**Meters:** (N),H,I,J,K,L,M,N,O,P,Q
**Spare Parts Only:** No
**Bypass:** Watts 919QT 3/4" (H)

---

**Type:** RPDA
**Size:** 2 1/2
**Manual:** 9
**Approved:** 20-Jun-2006
**Shutoffs:** (zzz)
**Manufacturer:** Watts
**Orientation:** H
**0.25% Pb:** No
**Renewed:** 20-Jun-2018
**Model:** 957RPDA-GV
**Meters:** (N), H, I J, K L, M, N, O, P, Q
**Spare Parts Only:** No
**Bypass:** Watts 919QT 3/4" (H)

---

**Type:** RPDA
**Size:** 3
**Manual:** 9
**Approved:** 20-Jun-2006
**Shutoffs:** (zzz)
**Manufacturer:** Watts
**Orientation:** H
**0.25% Pb:** No
**Renewed:** 20-Jun-2018
**Model:** 957RPDA-GV
**Meters:** (N), H, I J, K L, M, N, O, P, Q
**Spare Parts Only:** No
**Bypass:** Watts 919QT 3/4" (H)

---

**Type:** RPDA
**Size:** 4
**Manual:** 9
**Approved:** 20-Jun-2006
**Shutoffs:** (zzz)
**Manufacturer:** Watts
**Orientation:** H
**0.25% Pb:** No
**Renewed:** 20-Jun-2018
**Model:** 957RPDA-GV
**Meters:** (N), H, I J, K L, M, N, O, P, Q
**Spare Parts Only:** No
**Bypass:** Watts 919QT 3/4" (H)

**Type:** RPDA
**Size:** 6
**Manual:** 9
**Approved:** 20-Jun-2006
**Shutoffs:** (zzz)
**Manufacturer:** Watts
**Orientation:** H
**0.25% Pb:** No
**Renewed:** 20-Jun-2018
**Model:** 957RPDA-GV
**Meters:** (N), H, I J, K L, M, N, O, P, Q
**Spare Parts Only:** No
**Bypass:** Watts 919QT 3/4" (H)

---

**Type:** RPDA
**Size:** 8
**Manual:** 9
**Approved:** 15-Nov-2010
**Shutoffs:** (zzz)
**Manufacturer:** Watts
**Orientation:** H
**0.25% Pb:** No
**Renewed:** 15-Nov-2016
**Model:** 957RPDA-GV
**Meters:** (N),H,I,J,K,L,M,N,O,P,Q
**Spare Parts Only:** No
**Bypass:** Watts 919QT 3/4" (H)

---

**Type:** RPDA
**Size:** 10
**Manual:** 9
**Approved:** 27-Sep-2010
**Shutoffs:** (zzz)
**Manufacturer:** Watts
**Orientation:** H
**0.25% Pb:** No
**Renewed:** 27-Sep-2016
**Model:** 957RPDA-GV
**Meters:** (N), H, I J, K L, M, N, O, P, Q
**Spare Parts Only:** No
**Bypass:** Watts 919QT 3/4" (H)

---

**Type:** RPDA
**Size:** 2 1/2
**Manual:** 9
**Approved:** 24-Jun-2013
**Shutoffs:** (yyy)
**Manufacturer:** Watts
**Orientation:** VUVU
**0.25% Pb:** No
**Renewed:** 24-Jun-2016
**Model:** 957ZRPDA-BF
**Meters:** (N),H,I,J,K,L,M,N,O,P,Q
**Spare Parts Only:** No
**Bypass:** Watts 919QT 3/4" (H)

---

**Type:** RPDA
**Size:** 3
**Manual:** 9
**Approved:** 24-Jun-2013
**Shutoffs:** (yyy)
**Manufacturer:** Watts
**Orientation:** VUVU
**0.25% Pb:** No
**Renewed:** 24-Jun-2016
**Model:** 957ZRPDA-BF
**Meters:** (N),H,I,J,K,L,M,N,O,P,Q
**Spare Parts Only:** No
**Bypass:** Watts 919QT 3/4" (H)

---

**Type:** RPDA
**Size:** 4
**Manual:** 9
**Approved:** 24-Jun-2013
**Shutoffs:** (yyy)
**Manufacturer:** Watts
**Orientation:** VUVU
**0.25% Pb:** No
**Renewed:** 24-Jun-2016
**Model:** 957ZRPDA-BF
**Meters:** (N),H,I,J,K,L,M,N,O,P,Q
**Spare Parts Only:** No
**Bypass:** Watts 919QT 3/4" (H)

---

**Type:** RPDA
**Size:** 8
**Manual:** 9
**Approved:** 14-Jun-2013
**Shutoffs:** (yyy)
**Manufacturer:** Watts
**Orientation:** VUVU
**0.25% Pb:** No
**Renewed:** 14-Jun-2016
**Model:** 957ZRPDA-BF
**Meters:** (N),H,I,J,K,L,M,N,O,P,Q
**Spare Parts Only:** No
**Bypass:** Watts 919QT 3/4" (H)


2018 © University of Southern California

**Type:** RPDA
**Size:** 2 1/2
**Manual:** 9
**Approved:** 24-Jun-2013
**Shutoffs:** (zzz)
**Manufacturer:** Watts
**Orientation:** VUVU
**0.25% Pb:** No
**Renewed:** 24-Jun-2016
**Model:** 957ZRPDA-GV
**Meters:** (N),H,I,J,K,L,M,N,O,P,Q
**Spare Parts Only:** No
**Bypass:** Watts 919QT 3/4" (H)

---

**Type:** RPDA
**Size:** 3
**Manual:** 9
**Approved:** 24-Jun-2013
**Shutoffs:** (zzz)
**Manufacturer:** Watts
**Orientation:** VUVU
**0.25% Pb:** No
**Renewed:** 24-Jun-2016
**Model:** 957ZRPDA-GV
**Meters:** (N),H,I,J,K,L,M,N,O,P,Q
**Spare Parts Only:** No
**Bypass:** Watts 919QT 3/4" (H)

---

**Type:** RPDA
**Size:** 4
**Manual:** 9
**Approved:** 24-Jun-2013
**Shutoffs:** (zzz)
**Manufacturer:** Watts
**Orientation:** VUVU
**0.25% Pb:** No
**Renewed:** 24-Jun-2016
**Model:** 957ZRPDA-GV
**Meters:** (N),H,I,J,K,L,M,N,O,P,Q
**Spare Parts Only:** No
**Bypass:** Watts 919QT 3/4" (H)

---

**Type:** RPDA
**Size:** 8
**Manual:** 9
**Approved:** 14-Jun-2013
**Shutoffs:** (zzz)
**Manufacturer:** Watts
**Orientation:** VUVU
**0.25% Pb:** No
**Renewed:** 14-Jun-2016
**Model:** 957ZRPDA-GV
**Meters:** (N),H,I,J,K,L,M,N,O,P,Q
**Spare Parts Only:** No
**Bypass:** Watts 919QT 3/4" (H)

---

**Type:** RPDA
**Size:** 2 1/2
**Manual:** 9
**Approved:** 24-Jun-2013
**Shutoffs:** (yyy)
**Manufacturer:** Watts
**Orientation:** VUVD
**0.25% Pb:** No
**Renewed:** 24-Jun-2016
**Model:** 967NRPDA-BF
**Meters:** (N),H,I,J,K,L,M,N,O,P,Q
**Spare Parts Only:** No
**Bypass:** Watts 919QT 3/4" (H)

---

**Type:** RPDA
**Size:** 3
**Manual:** 9
**Approved:** 07-Apr-2009
**Shutoffs:** (yyy)
**Manufacturer:** Watts
**Orientation:** VUVD
**0.25% Pb:** No
**Renewed:** 07-Apr-2018
**Model:** 967NRPDA-BF
**Meters:** (N),H,I,J,K,L,M,N,O,P,Q
**Spare Parts Only:** No
**Bypass:** Watts 919QT 3/4" (H)

---

**Type:** RPDA
**Size:** 4
**Manual:** 9
**Approved:** 15-Nov-2010
**Shutoffs:** (yyy)
**Manufacturer:** Watts
**Orientation:** VUVD
**0.25% Pb:** No
**Renewed:** 15-Nov-2016
**Model:** 967NRPDA-BF
**Meters:** (N),H,I,J,K,L,M,N,O,P,Q
**Spare Parts Only:** No
**Bypass:** Watts 919QT 3/4" (H)

**Type:** RPDA
**Size:** 6
**Manual:** 9
**Approved:** 14-Jun-2013
**Shutoffs:** (yyy)
**Manufacturer:** Watts
**Orientation:** VUVD
**0.25% Pb:** No
**Renewed:** 14-Jun-2016
**Model:** 967NRPDA-BF
**Meters:** (N),H,I,J,K,L,M,N,O,P,Q
**Spare Parts Only:** No
**Bypass:** Watts 919QT 3/4" (H)

---

**Type:** RPDA
**Size:** 2 1/2
**Manual:** 9
**Approved:** 07-Apr-2009
**Shutoffs:** (zzz)
**Manufacturer:** Watts
**Orientation:** VUVD
**0.25% Pb:** No
**Renewed:** 07-Apr-2018
**Model:** 967NRPDA-GV
**Meters:** (N),H,I,J,K,L,M,N,O,P,Q
**Spare Parts Only:** No
**Bypass:** Watts 919QT 3/4" (H)

---

**Type:** RPDA
**Size:** 3
**Manual:** 9
**Approved:** 07-Apr-2009
**Shutoffs:** (zzz)
**Manufacturer:** Watts
**Orientation:** VUVD
**0.25% Pb:** No
**Renewed:** 07-Apr-2018
**Model:** 967NRPDA-GV
**Meters:** (N),H,I,J,K,L,M,N,O,P,Q
**Spare Parts Only:** No
**Bypass:** Watts 919QT 3/4" (H)

---

**Type:** RPDA
**Size:** 4
**Manual:** 9
**Approved:** 15-Nov-2010
**Shutoffs:** (zzz)
**Manufacturer:** Watts
**Orientation:** VUVD
**0.25% Pb:** No
**Renewed:** 15-Nov-2016
**Model:** 967NRPDA-GV
**Meters:** (N),H,I,J,K,L,M,N,O,P,Q
**Spare Parts Only:** No
**Bypass:** Watts 919QT 3/4" (H)

---

**Type:** RPDA
**Size:** 6
**Manual:** 9
**Approved:** 14-Jun-2013
**Shutoffs:** (zzz)
**Manufacturer:** Watts
**Orientation:** VUVD
**0.25% Pb:** No
**Renewed:** 14-Jun-2016
**Model:** 967NRPDA-GV
**Meters:** (N),H,I,J,K,L,M,N,O,P,Q
**Spare Parts Only:** No
**Bypass:** Watts 919QT 3/4" (H)

---

**Type:** RPDA
**Size:** 2 1/2
**Manual:** 9
**Approved:** 20-Jun-2006
**Shutoffs:** (zzz)
**Manufacturer:** Watts
**Orientation:** H
**0.25% Pb:** No
**Renewed:** 20-Jun-2018
**Model:** 967RPDA-GV
**Meters:** (N), H, I J, K L, M, N, O, P, Q
**Spare Parts Only:** No
**Bypass:** Watts 919QT 3/4" (H)

---

**Type:** RPDA
**Size:** 3
**Manual:** 9
**Approved:** 20-Jun-2006
**Shutoffs:** (zzz)
**Manufacturer:** Watts
**Orientation:** H
**0.25% Pb:** No
**Renewed:** 20-Jun-2018
**Model:** 967RPDA-GV
**Meters:** (N), H, I J, K L, M, N, O, P, Q
**Spare Parts Only:** No
**Bypass:** Watts 919QT 3/4" (H)


2018 © University of Southern California

**Type:** RPDA
**Size:** 4
**Manual:** 9
**Approved:** 20-Jun-2006
**Shutoffs:** (zzz)
**Manufacturer:** Watts
**Orientation:** H
**0.25% Pb:** No
**Renewed:** 20-Jun-2018
**Model:** 967RPDA-GV
**Meters:** (N), H, I J, K L, M, N, O, P, Q
**Spare Parts Only:** No
**Bypass:** Watts 919QT 3/4" (H)

---

**Type:** RPDA
**Size:** 6
**Manual:** 9
**Approved:** 15-Nov-2010
**Shutoffs:** (zzz)
**Manufacturer:** Watts
**Orientation:** H
**0.25% Pb:** No
**Renewed:** 15-Nov-2016
**Model:** 967RPDA-GV
**Meters:** (N),H,I,J,K,L,M,N,O,P,Q
**Spare Parts Only:** No
**Bypass:** Watts 919QT 3/4" (H)

---

**Type:** RPDA
**Size:** 8
**Manual:** 9
**Approved:** 27-Sep-2010
**Shutoffs:** (zzz)
**Manufacturer:** Watts
**Orientation:** H
**0.25% Pb:** No
**Renewed:** 27-Sep-2016
**Model:** 967RPDA-GV
**Meters:** (N), H, I J, K L, M, N, O, P, Q
**Spare Parts Only:** No
**Bypass:** Watts 919QT 3/4" (H)

---

**Type:** RPDA
**Size:** 10
**Manual:** 9
**Approved:** 27-Sep-2010
**Shutoffs:** (zzz)
**Manufacturer:** Watts
**Orientation:** H
**0.25% Pb:** No
**Renewed:** 27-Sep-2016
**Model:** 967RPDA-GV
**Meters:** (N), H, I J, K L, M, N, O, P, Q
**Spare Parts Only:** No
**Bypass:** Watts 919QT 3/4" (H)

---

**Type:** RPDA
**Size:** 2 1/2
**Manual:** 9
**Approved:** 24-Jun-2013
**Shutoffs:** (yyy)
**Manufacturer:** Watts
**Orientation:** VUVU
**0.25% Pb:** No
**Renewed:** 24-Jun-2016
**Model:** 967ZRPDA-BF
**Meters:** (N),H,I,J,K,L,M,N,O,P,Q
**Spare Parts Only:** No
**Bypass:** Watts 919QT 3/4" (H)

---

**Type:** RPDA
**Size:** 3
**Manual:** 9
**Approved:** 24-Jun-2013
**Shutoffs:** (yyy)
**Manufacturer:** Watts
**Orientation:** VUVU
**0.25% Pb:** No
**Renewed:** 24-Jun-2016
**Model:** 967ZRPDA-BF
**Meters:** (N),H,I,J,K,L,M,N,O,P,Q
**Spare Parts Only:** No
**Bypass:** Watts 919QT 3/4" (H)

---

**Type:** RPDA
**Size:** 6
**Manual:** 9
**Approved:** 14-Jun-2013
**Shutoffs:** (yyy)
**Manufacturer:** Watts
**Orientation:** VUVU
**0.25% Pb:** No
**Renewed:** 14-Jun-2016
**Model:** 967ZRPDA-BF
**Meters:** (N),H,I,J,K,L,M,N,O,P,Q
**Spare Parts Only:** No
**Bypass:** Watts 919QT 3/4" (H)

**Type:** RPDA
**Size:** 2 1/2
**Manual:** 9
**Approved:** 24-Jun-2013
**Shutoffs:** (zzz)

**Manufacturer:** Watts
**Orientation:** VUVU
**0.25% Pb:** No
**Renewed:** 24-Jun-2016

**Model:** 967ZRPDA-GV
**Meters:** (N),H,I,J,K,L,M,N,O,P,Q
**Spare Parts Only:** No
**Bypass:** Watts 919QT 3/4" (H)

---

**Type:** RPDA
**Size:** 3
**Manual:** 9
**Approved:** 24-Jun-2013
**Shutoffs:** (zzz)

**Manufacturer:** Watts
**Orientation:** VUVU
**0.25% Pb:** No
**Renewed:** 24-Jun-2016

**Model:** 967ZRPDA-GV
**Meters:** (N),H,I,J,K,L,M,N,O,P,Q
**Spare Parts Only:** No
**Bypass:** Watts 919QT 3/4" (H)

---

**Type:** RPDA
**Size:** 6
**Manual:** 9
**Approved:** 14-Jun-2013
**Shutoffs:** (zzz)

**Manufacturer:** Watts
**Orientation:** VUVU
**0.25% Pb:** No
**Renewed:** 14-Jun-2016

**Model:** 967ZRPDA-GV
**Meters:** (N),H,I,J,K,L,M,N,O,P,Q
**Spare Parts Only:** No
**Bypass:** Watts 919QT 3/4" (H)

---

**Type:** RPDA
**Size:** 4
**Manual:** 8
**Approved:** 01-Nov-1992
**Shutoffs:** pp,hh,mm,uu,zz

**Manufacturer:** Watts
**Orientation:** H
**0.25% Pb:** No
**Renewed:** 11-Nov-2016

**Model:** 990RPDA
**Meters:** (H),A,B,C,D,E,F,G,I,J,K,L,M,N,O,P,Q,T
**Spare Parts Only:** Yes
**Bypass:** Watts 009QT 3/4 (H)

---

**Type:** RPDA
**Size:** 8
**Manual:** 8
**Approved:** 13-Jan-1993
**Shutoffs:** oo,gg,hh,ll,mm,pp,tt,uu

**Manufacturer:** Watts
**Orientation:** H
**0.25% Pb:** No
**Renewed:** 13-Jan-2017

**Model:** 990RPDA
**Meters:** (H),D,E,F,G,I,J,K,L,M,N,O,P,Q,T
**Spare Parts Only:** Yes
**Bypass:** Watts 009QT 3/4 (H)

---

**Type:** RPDA
**Size:** 4
**Manual:** 8
**Approved:** 01-Nov-1992
**Shutoffs:** oo

**Manufacturer:** Watts
**Orientation:** H
**0.25% Pb:** No
**Renewed:** 11-Nov-2016

**Model:** 992RPDA
**Meters:** (H),A,B,C,D,E,F,G,I,J,K,L,M,N,O,P,Q,T
**Spare Parts Only:** Yes
**Bypass:** Watts 009QT 3/4 (H)


2018 © University of Southern California

**Type:** RPDA
**Manufacturer:** Watts
**Model:** 992RPDA
**Size:** 10
**Orientation:** H
**Meters:** (H),D,E,F,G,I,J,K,L,M,N,O,P,Q,T
**Manual:** 8
**0.25% Pb:** No
**Spare Parts Only:** Yes
**Approved:** 13-Jan-1993
**Renewed:** 13-Jan-2017
**Bypass:** Watts 009QT 3/4 (H)
**Shutoffs:** oo

---

**Type:** RPDA
**Manufacturer:** Watts
**Model:** LF957NRPDA-BF
**Size:** 2 1/2
**Orientation:** VUVD
**Meters:** (O)
**Manual:** 9
**0.25% Pb:** Yes
**Spare Parts Only:** No
**Approved:** 08-Jan-2014
**Renewed:** 08-Jan-2017
**Bypass:** Watts LF919QT 3/4" (H)
**Shutoffs:** (zzz)
**Notes:** Lead free compliant version identified with NSF61 mark on meter

---

**Type:** RPDA
**Manufacturer:** Watts
**Model:** LF957NRPDA-BF
**Size:** 3
**Orientation:** VUVD
**Meters:** (O)
**Manual:** 9
**0.25% Pb:** Yes
**Spare Parts Only:** No
**Approved:** 08-Jan-2014
**Renewed:** 08-Jan-2017
**Bypass:** Watts LF919QT 3/4" (H)
**Shutoffs:** (zzz)
**Notes:** Lead free compliant version identified with NSF61 mark on meter

---

**Type:** RPDA
**Manufacturer:** Watts
**Model:** LF957NRPDA-BF
**Size:** 4
**Orientation:** VUVD
**Meters:** (O)
**Manual:** 9
**0.25% Pb:** Yes
**Spare Parts Only:** No
**Approved:** 08-Jan-2014
**Renewed:** 08-Jan-2017
**Bypass:** Watts LF919QT 3/4" (H)
**Shutoffs:** (zzz)
**Notes:** Lead free compliant version identified with NSF61 mark on meter

---

**Type:** RPDA
**Manufacturer:** Watts
**Model:** LF957NRPDA-GV
**Size:** 2 1/2
**Orientation:** VUVD
**Meters:** (O)
**Manual:** 9
**0.25% Pb:** Yes
**Spare Parts Only:** No
**Approved:** 08-Jan-2014
**Renewed:** 08-Jan-2017
**Bypass:** Watts LF919QT 3/4" (H)
**Shutoffs:** (zzz)
**Notes:** Lead free compliant version identified with NSF61 mark on meter

---

**Type:** RPDA
**Manufacturer:** Watts
**Model:** LF957NRPDA-GV
**Size:** 3
**Orientation:** VUVD
**Meters:** (O)
**Manual:** 9
**0.25% Pb:** Yes
**Spare Parts Only:** No
**Approved:** 08-Jan-2014
**Renewed:** 08-Jan-2017
**Bypass:** Watts LF919QT 3/4" (H)
**Shutoffs:** (zzz)
**Notes:** Lead free compliant version identified with NSF61 mark on meter

**Type:** RPDA
**Manufacturer:** Watts
**Model:** LF957NRPDA-GV
**Size:** 4
**Orientation:** VUVD
**Meters:** (O)
**Manual:** 9
**0.25% Pb:** Yes
**Spare Parts Only:** No
**Approved:** 08-Jan-2014
**Renewed:** 08-Jan-2017
**Bypass:** Watts LF919QT 3/4" (H)
**Shutoffs:** (zzz)
**Notes:** Lead free compliant version identified with NSF61 mark on meter

---

**Type:** RPDA
**Manufacturer:** Watts
**Model:** LF957RPDA-GV
**Size:** 2 1/2
**Orientation:** H
**Meters:** (O)
**Manual:** 9
**0.25% Pb:** Yes
**Spare Parts Only:** No
**Approved:** 15-May-2014
**Renewed:** 15-May-2017
**Bypass:** Watts LF919QT 3/4" (H)
**Shutoffs:** (zzz)
**Notes:** Water meter identified with NSF61 mark

---

**Type:** RPDA
**Manufacturer:** Watts
**Model:** LF957RPDA-GV
**Size:** 3
**Orientation:** H
**Meters:** (O)
**Manual:** 9
**0.25% Pb:** Yes
**Spare Parts Only:** No
**Approved:** 15-May-2014
**Renewed:** 15-May-2017
**Bypass:** Watts LF919QT 3/4" (H)
**Shutoffs:** (zzz)
**Notes:** Water meter identified with NSF61 mark

---

**Type:** RPDA
**Manufacturer:** Watts
**Model:** LF957RPDA-GV
**Size:** 4
**Orientation:** H
**Meters:** (O)
**Manual:** 9
**0.25% Pb:** Yes
**Spare Parts Only:** No
**Approved:** 15-May-2014
**Renewed:** 15-May-2017
**Bypass:** Watts LF919QT 3/4" (H)
**Shutoffs:** (zzz)
**Notes:** Water meter identified with NSF61 mark

---

**Type:** RPDA
**Manufacturer:** Watts
**Model:** LF957RPDA-GV
**Size:** 6
**Orientation:** H
**Meters:** (O)
**Manual:** 9
**0.25% Pb:** Yes
**Spare Parts Only:** No
**Approved:** 15-May-2014
**Renewed:** 15-May-2017
**Bypass:** Watts LF919QT 3/4" (H)
**Shutoffs:** (zzz)
**Notes:** Water meter identified with NSF61 mark

---

**Type:** RPDA
**Manufacturer:** Watts
**Model:** LF957RPDAGV
**Size:** 8
**Orientation:** H
**Meters:** (M)
**Manual:** 9
**0.25% Pb:** Yes
**Spare Parts Only:** No
**Approved:** 13-Aug-2015
**Renewed:** 13-Aug-2018
**Bypass:** Watts LF919QT 3/4" (H)
**Shutoffs:** (zzz)
**Notes:** Water meter identified with NSF61 mark


2018 © University of Southern California

**Type:** RPDA
**Manufacturer:** Watts
**Model:** LF957RPDAGV
**Size:** 10
**Orientation:** H
**Meters:** (M)
**Manual:** 9
**0.25% Pb:** Yes
**Spare Parts Only:** No
**Approved:** 21-Sep-2015
**Renewed:** 21-Sep-2018
**Bypass:** Watts LF919QT 3/4" (H)
**Shutoffs:** (zzz)
**Notes:** Lead free compliant version identified with NSF61 mark on meter

---

**Type:** RPDA
**Manufacturer:** Watts
**Model:** LF957ZRPDA-BF
**Size:** 2 1/2
**Orientation:** VUVD
**Meters:** (O)
**Manual:** 9
**0.25% Pb:** Yes
**Spare Parts Only:** No
**Approved:** 08-Jan-2014
**Renewed:** 08-Jan-2017
**Bypass:** Watts LF919QT 3/4" (H)
**Shutoffs:** (zzz)
**Notes:** Lead free compliant version identified with NSF61 mark on meter

---

**Type:** RPDA
**Manufacturer:** Watts
**Model:** LF957ZRPDA-BF
**Size:** 3
**Orientation:** VUVD
**Meters:** (O)
**Manual:** 9
**0.25% Pb:** Yes
**Spare Parts Only:** No
**Approved:** 08-Jan-2014
**Renewed:** 08-Jan-2017
**Bypass:** Watts LF919QT 3/4" (H)
**Shutoffs:** (zzz)
**Notes:** Lead free compliant version identified with NSF61 mark on meter

---

**Type:** RPDA
**Manufacturer:** Watts
**Model:** LF957ZRPDA-BF
**Size:** 4
**Orientation:** VUVD
**Meters:** (O)
**Manual:** 9
**0.25% Pb:** Yes
**Spare Parts Only:** No
**Approved:** 08-Jan-2014
**Renewed:** 08-Jan-2017
**Bypass:** Watts LF919QT 3/4" (H)
**Shutoffs:** (zzz)
**Notes:** Lead free compliant version identified with NSF61 mark on meter

---

**Type:** RPDA
**Manufacturer:** Watts
**Model:** LF957ZRPDA-GV
**Size:** 2 1/2
**Orientation:** VUVD
**Meters:** (O)
**Manual:** 9
**0.25% Pb:** Yes
**Spare Parts Only:** No
**Approved:** 08-Jan-2014
**Renewed:** 08-Jan-2017
**Bypass:** Watts LF919QT 3/4" (H)
**Shutoffs:** (zzz)
**Notes:** Lead free compliant version identified with NSF61 mark on meter

---

**Type:** RPDA
**Manufacturer:** Watts
**Model:** LF957ZRPDA-GV
**Size:** 3
**Orientation:** VUVD
**Meters:** (O)
**Manual:** 9
**0.25% Pb:** Yes
**Spare Parts Only:** No
**Approved:** 08-Jan-2014
**Renewed:** 08-Jan-2017
**Bypass:** Watts LF919QT 3/4" (H)
**Shutoffs:** (zzz)
**Notes:** Lead free compliant version identified with NSF61 mark on meter

**Type:** RPDA **Manufacturer:** Watts **Model:** LF957ZRPDA-GV
**Size:** 4 **Orientation:** VUVD **Meters:** (O)
**Manual:** 9 **0.25% Pb:** Yes **Spare Parts Only:** No
**Approved:** 08-Jan-2014 **Renewed:** 08-Jan-2017 **Bypass:** Watts LF919QT 3/4" (H)
**Shutoffs:** (zzz)
**Notes:** Lead free compliant version identified with NSF61 mark on meter

---

**Type:** RPDA **Manufacturer:** Wilkins **Model:** 375ADA
**Size:** 2 1/2 **Orientation:** H **Meters:** (M),H,I,J,K,L,N,O,P,Q
**Manual:** 9 **0.25% Pb:** No **Spare Parts Only:** No
**Approved:** 20-Oct-2008 **Renewed:** 20-Oct-2017 **Bypass:** Wilkins 975XLD 3/4 (H)
**Shutoffs:** (qqq),ttt,www,yyy,zzz,uuuu,vvvv,xxxx,yyyy,kkkkk,lllll,iiiiii,jjjjjj,llllll,mmmmmm

---

**Type:** RPDA **Manufacturer:** Wilkins **Model:** 375ADA
**Size:** 2 1/2 **Orientation:** H **Meters:** (O), M
**Manual:** 9 **0.25% Pb:** Yes **Spare Parts Only:** No
**Approved:** 18-Feb-2014 **Renewed:** 18-Feb-2017 **Bypass:** Wilkins 975XLD 3/4 (H)
**Shutoffs:** (qqq),ttt,www,yyy,uuuu,vvvv,xxxx,yyyy,kkkkk,lllll,iiiiii,jjjjjj,llllll,mmmmmm
**Notes:** Lead free compliant version: Starting Serial # Y09616; By-pass Assembly Starting Serial # 3863325 and identified with NSF61 mark on meter

---

**Type:** RPDA **Manufacturer:** Wilkins **Model:** 375ADA
**Size:** 3 **Orientation:** H **Meters:** (M),H,I,J,K,L,N,O,P,Q
**Manual:** 9 **0.25% Pb:** No **Spare Parts Only:** No
**Approved:** 20-Oct-2008 **Renewed:** 20-Oct-2017 **Bypass:** Wilkins 975XLD 3/4 (H)
**Shutoffs:** (qqq),ttt,www,yyy,zzz,uuuu,vvvv,xxxx,yyyy,kkkkk,lllll,iiiiii,jjjjjj,llllll,mmmmmm

---

**Type:** RPDA **Manufacturer:** Wilkins **Model:** 375ADA
**Size:** 3 **Orientation:** H **Meters:** (O), M
**Manual:** 9 **0.25% Pb:** Yes **Spare Parts Only:** No
**Approved:** 18-Feb-2014 **Renewed:** 18-Feb-2017 **Bypass:** Wilkins 975XLD 3/4 (H)
**Shutoffs:** (qqq),ttt,www,yyy,uuuu,vvvv,xxxx,yyyy,kkkkk,lllll,iiiiii,jjjjjj,llllll,mmmmmm
**Notes:** Lead free compliant version: Starting Serial # Y09616; By-pass Assembly Starting Serial # 3863325 and identified with NSF61 mark on meter

---

**Type:** RPDA **Manufacturer:** Wilkins **Model:** 375ADA
**Size:** 4 **Orientation:** H **Meters:** (M),B,C,D,E,F,G,H,I,J,K,L,N,O,P,Q,T
**Manual:** 9 **0.25% Pb:** No **Spare Parts Only:** No
**Approved:** 02-Jun-2004 **Renewed:** 02-Jun-2016 **Bypass:** Wilkins 975XLD 3/4" (H)
**Shutoffs:** (qqq),ttt,www,yyy,zzz,eeee,uuuu,vvvv,xxxx,yyyy,kkkkk,lllll,iiiiii,jjjjjj,llllll,mmmmmm


2018 © University of Southern California

**Type:** RPDA **Manufacturer:** Wilkins **Model:** 375ADA
**Size:** 4 **Orientation:** H **Meters:** (O), M
**Manual:** 9 **0.25% Pb:** Yes **Spare Parts Only:** No
**Approved:** 18-Feb-2014 **Renewed:** 18-Feb-2017 **Bypass:** Wilkins 975XLD 3/4" (H)
**Shutoffs:** (qqq),ttt,www,yyy,xxxx,yyyy,kkkkk,lllll,llllll,mmmmmm
**Notes:** Lead free compliant version: Starting Serial # Y09616; By-pass Assembly Starting Serial # 3863325 and identified with NSF61 mark on meter

---

**Type:** RPDA **Manufacturer:** Wilkins **Model:** 375ADA
**Size:** 6 **Orientation:** H **Meters:** (M),C,D,E,F,G,H,I,J,K,L,N,O,P,Q,T
**Manual:** 9 **0.25% Pb:** No **Spare Parts Only:** No
**Approved:** 25-Nov-2003 **Renewed:** 25-Nov-2015 **Bypass:** Wilkins 975XLD 3/4 (H)
**Shutoffs:** (qqq),ttt,www,yyy,zzz,eeee,uuuu,vvvv,xxxx,yyyy,kkkkk,lllll,iiiiii,jjjjjj,llllll,mmmmmm

---

**Type:** RPDA **Manufacturer:** Wilkins **Model:** 375ADA
**Size:** 6 **Orientation:** H **Meters:** (O), M
**Manual:** 9 **0.25% Pb:** Yes **Spare Parts Only:** No
**Approved:** 18-Feb-2014 **Renewed:** 18-Feb-2017 **Bypass:** Wilkins 975XLD 3/4 (H)
**Shutoffs:** (qqq),ttt,www,yyy,xxxx,yyyy,kkkkk,lllll,llllll,mmmmmm
**Notes:** Lead free compliant version: Starting Serial # Y09616; By-pass Assembly Starting Serial # 3863325 and identified with NSF61 mark on meter

---

**Type:** RPDA **Manufacturer:** Wilkins **Model:** 375ADA
**Size:** 8 **Orientation:** H **Meters:** (N),G,H,I,J,K,L,N,O,P,Q,T
**Manual:** 9 **0.25% Pb:** No **Spare Parts Only:** No
**Approved:** 15-Jun-2004 **Renewed:** 15-Jun-2016 **Bypass:** Wilkins 975XLD 3/4" (H)
**Shutoffs:** (qqq),ttt,www,yyy,zzz,eeee,uuuu,vvvv,xxxx,yyyy,kkkkk,lllll,iiiiii,jjjjjj,llllll,mmmmmm

---

**Type:** RPDA **Manufacturer:** Wilkins **Model:** 375ADA
**Size:** 8 **Orientation:** H **Meters:** (O), M
**Manual:** 9 **0.25% Pb:** Yes **Spare Parts Only:** No
**Approved:** 18-Feb-2014 **Renewed:** 18-Feb-2017 **Bypass:** Wilkins 975XLD 3/4" (H)
**Shutoffs:** (qqq),ttt,www,yyy,xxxx,yyyy,kkkkk,lllll,llllll,mmmmmm
**Notes:** Lead free compliant version: Starting Serial # Y09616; By-pass Assembly Starting Serial # 3863325 and identified with NSF61 mark on meter

**Type:** RPDA **Manufacturer:** Wilkins **Model:** 375ADA
**Size:** 10 **Orientation:** H **Meters:** (N),H,I,J,K,L,M,N,O,P,Q
**Manual:** 9 **0.25% Pb:** No **Spare Parts Only:** No
**Approved:** 11-Mar-2009 **Renewed:** 11-Mar-2018 **Bypass:** Wilkins 975XLD 3/4" (H)
**Shutoffs:** (qqq),ttt,www,yyy,zzz,eeee,uuuu,vvvv,xxxx,yyyy,kkkkk,lllll,iiiiii,jjjjjj,llllll,mmmmmm

**Type:** RPDA **Manufacturer:** Wilkins **Model:** 375ADA
**Size:** 10 **Orientation:** H **Meters:** (O), M
**Manual:** 9 **0.25% Pb:** Yes **Spare Parts Only:** No
**Approved:** 18-Feb-2014 **Renewed:** 18-Feb-2017 **Bypass:** Wilkins 975XLD 3/4" (H)
**Shutoffs:** (qqq),ttt,www,yyy,xxxx,yyyy,kkkkk,lllll,llllll,mmmmmm
**Notes:** Lead free compliant version: Starting Serial # Y09616; By-pass Assembly Starting Serial # 3863325 and identified with NSF61 mark on meter

---

**Type:** RPDA **Manufacturer:** Wilkins **Model:** 375ADAR
**Size:** 2 1/2 **Orientation:** H **Meters:** (M),H,I,J,K,L,N,O,P,Q
**Manual:** 9 **0.25% Pb:** No **Spare Parts Only:** No
**Approved:** 16-Jun-2010 **Renewed:** 16-Jun-2016 **Bypass:** Wilkins 975XLD 3/4 (H)
**Shutoffs:** (qqq),ttt,www,yyy,zzz,uuuu,vvvv,xxxx,yyyy,kkkkk,lllll,iiiiii,jjjjjj,llllll,mmmmmm
**Notes:** Integral grooved spool between the #2 ck and #2 SOV - assembly length: min. 34 1/4" and max. 47 1/8"

---

**Type:** RPDA **Manufacturer:** Wilkins **Model:** 375ADAR
**Size:** 2 1/2 **Orientation:** H **Meters:** (O), M
**Manual:** 9 **0.25% Pb:** Yes **Spare Parts Only:** No
**Approved:** 18-Feb-2014 **Renewed:** 18-Feb-2017 **Bypass:** Wilkins 975XLD 3/4 (H)
**Shutoffs:** (qqq),ttt,www,yyy,uuuu,vvvv,xxxx,yyyy,kkkkk,lllll,iiiiii,jjjjjj,llllll,mmmmmm
**Notes:** Integral grooved spool between the #2 ck and #2 SOV - assembly length: min. 34 1/4" and max. 47 1/8" and Lead free compliant version: Starting Serial # T00466; By-pass Assembly Starting Serial # 3863325 and identified with NSF61 mark on meter

---

**Type:** RPDA **Manufacturer:** Wilkins **Model:** 375ADAR
**Size:** 3 **Orientation:** H **Meters:** (M),H,I,J,K,L,N,O,P,Q
**Manual:** 9 **0.25% Pb:** No **Spare Parts Only:** No
**Approved:** 16-Jun-2010 **Renewed:** 16-Jun-2016 **Bypass:** Wilkins 975XLD 3/4 (H)
**Shutoffs:** (qqq),ttt,www,yyy,zzz,uuuu,vvvv,xxxx,yyyy,kkkkk,lllll,iiiiii,jjjjjj,llllll,mmmmmm
**Notes:** Integral grooved spool between the #2 ck and #2 SOV - assembly length: min. 34 3/4" and max. 48 1/8"

---

**Type:** RPDA **Manufacturer:** Wilkins **Model:** 375ADAR
**Size:** 3 **Orientation:** H **Meters:** (O), M
**Manual:** 9 **0.25% Pb:** Yes **Spare Parts Only:** No
**Approved:** 18-Feb-2014 **Renewed:** 18-Feb-2017 **Bypass:** Wilkins 975XLD 3/4 (H)
**Shutoffs:** (qqq),ttt,www,yyy,uuuu,vvvv,xxxx,yyyy,kkkkk,lllll,iiiiii,jjjjjj,llllll,mmmmmm
**Notes:** Integral grooved spool between the #2 ck and #2 SOV - assembly length: min. 34 3/4" and max. 48 1/8" and Lead free compliant version: Starting Serial # T00466; By-pass Assembly Starting Serial # 3863325 and identified with NSF61 mark on meter


2018 © University of Southern California

**Type:** RPDA | **Manufacturer:** Wilkins | **Model:** 375ADAR
**Size:** 4 | **Orientation:** H | **Meters:** (M),A,B,C,D,E,F,G,H,I,J,K,L,N,O,P,Q,T
**Manual:** 9 | **0.25% Pb:** No | **Spare Parts Only:** No
**Approved:** 25-Mar-2010 | **Renewed:** 25-Mar-2016 | **Bypass:** Wilkins 975XLD 3/4 (H)
**Shutoffs:** (qqq),ttt,www,yyy,zzz,eeee,uuuu,vvvv,xxxx,yyyy,kkkkk,lllll,iiiiii,jjjjjj,llllll,mmmmmm
**Notes:** Integral grooved spool between the #2 ck and #2 SOV - assembly length: min. 35 3/4" and max. 62 1/4"

---

**Type:** RPDA | **Manufacturer:** Wilkins | **Model:** 375ADAR
**Size:** 4 | **Orientation:** H | **Meters:** (O), M
**Manual:** 9 | **0.25% Pb:** Yes | **Spare Parts Only:** No
**Approved:** 18-Feb-2014 | **Renewed:** 18-Feb-2017 | **Bypass:** Wilkins 975XLD 3/4 (H)
**Shutoffs:** (qqq),ttt,www,yyy,xxxx,yyyy,kkkkk,lllll,llllll,mmmmmm
**Notes:** Integral grooved spool between the #2 ck and #2 SOV - assembly length: min. 35 3/4" and max. 62 1/4" and Lead free compliant version: Starting Serial # T00466; By-pass Assembly Starting Serial # 3863325 and identified with NSF61 mark on meter

---

**Type:** RPDA | **Manufacturer:** Wilkins | **Model:** 375ADAR
**Size:** 6 | **Orientation:** H | **Meters:** (M),A,B,C,D,E,F,G,H,I,J,K,L,N,O,P,Q,T
**Manual:** 9 | **0.25% Pb:** No | **Spare Parts Only:** No
**Approved:** 25-Mar-2010 | **Renewed:** 25-Mar-2016 | **Bypass:** Wilkins 975XLD 3/4 (H)
**Shutoffs:** (qqq),ttt,www,yyy,zzz,eeee,uuuu,vvvv,xxxx,yyyy,kkkkk,lllll,iiiiii,jjjjjj,llllll,mmmmmm
**Notes:** Integral grooved spool between the #2 ck and #2 SOV - assembly length: min. 42 1/2" and max. 71 1/4"

---

**Type:** RPDA | **Manufacturer:** Wilkins | **Model:** 375ADAR
**Size:** 6 | **Orientation:** H | **Meters:** (O), M
**Manual:** 9 | **0.25% Pb:** Yes | **Spare Parts Only:** No
**Approved:** 18-Feb-2014 | **Renewed:** 18-Feb-2017 | **Bypass:** Wilkins 975XLD 3/4 (H)
**Shutoffs:** (qqq),ttt,www,yyy,xxxx,yyyy,kkkkk,lllll,llllll,mmmmmm
**Notes:** Integral grooved spool between the #2 ck and #2 SOV - assembly length: min. 42 1/2" and max. 71 1/4" and Lead free compliant version: Starting Serial # T00466; By-pass Assembly Starting Serial # 3863325 and identified with NSF61 mark on meter

---

**Type:** RPDA | **Manufacturer:** Wilkins | **Model:** 375ADAR
**Size:** 8 | **Orientation:** H | **Meters:** (M),A,B,C,D,E,F,G,H,I,J,K,L,N,O,P,Q,T
**Manual:** 9 | **0.25% Pb:** No | **Spare Parts Only:** No
**Approved:** 25-Mar-2010 | **Renewed:** 25-Mar-2016 | **Bypass:** Wilkins 975XLD 3/4 (H)
**Shutoffs:** (qqq),ttt,www,yyy,zzz,eeee,uuuu,vvvv,xxxx,yyyy,kkkkk,lllll,iiiiii,jjjjjj,llllll,mmmmmm
**Notes:** Integral grooved spool between the #2 ck and #2 SOV - assembly length: min. 57 7/8" and max. 86"

**Type:** RPDA **Manufacturer:** Wilkins **Model:** 375ADAR
**Size:** 8 **Orientation:** H **Meters:** (O), M
**Manual:** 9 **0.25% Pb:** Yes **Spare Parts Only:** No
**Approved:** 18-Feb-2014 **Renewed:** 18-Feb-2017 **Bypass:** Wilkins 975XLD 3/4 (H)
**Shutoffs:** (qqq),ttt,www,yyy,xxxx,yyyy,kkkkk,llllll,llllll,mmmmmm
**Notes:** Integral grooved spool between the #2 ck and #2 SOV - assembly length: min. 57 7/8" and max. 86" and Lead free compliant version: Starting Serial # T00466; By-pass Assembly Starting Serial # 3863325 and identified with NSF61 mark on meter

---

**Type:** RPDA **Manufacturer:** Wilkins **Model:** 375ADAR
**Size:** 10 **Orientation:** H **Meters:** (M),A,B,C,D,E,F,G,H,I,J,K,L,N,O,P,Q,T
**Manual:** 9 **0.25% Pb:** No **Spare Parts Only:** No
**Approved:** 25-Mar-2010 **Renewed:** 25-Mar-2016 **Bypass:** Wilkins 975XLD 3/4 (H)
**Shutoffs:** (qqq),ttt,www,yyy,zzz,eeee,uuuu,vvvv,xxxx,yyyy,kkkkk,llllll,iiiiii,jjjjjj,llllll,mmmmmm
**Notes:** Integral grooved spool between the #2 ck and #2 SOV - assembly length: min. 61 3/8" and max. 100 5/8"

---

**Type:** RPDA **Manufacturer:** Wilkins **Model:** 375ADAR
**Size:** 10 **Orientation:** H **Meters:** (O), M
**Manual:** 9 **0.25% Pb:** Yes **Spare Parts Only:** No
**Approved:** 18-Feb-2014 **Renewed:** 18-Feb-2017 **Bypass:** Wilkins 975XLD 3/4 (H)
**Shutoffs:** (qqq),ttt,www,yyy,xxxx,yyyy,kkkkk,llllll,llllll,mmmmmm
**Notes:** Integral grooved spool between the #2 ck and #2 SOV - assembly length: min. 61 3/8" and max. 100 5/8" and Lead free compliant version: Starting Serial # T00466; By-pass Assembly Starting Serial # 3863325 and identified with NSF61 mark on meter

---

**Type:** RPDA **Manufacturer:** Wilkins **Model:** 375ASTDA
**Size:** 2 1/2 **Orientation:** H **Meters:** (M),H,I,J,K,L,N,O,P,Q
**Manual:** 10 **0.25% Pb:** No **Spare Parts Only:** No
**Approved:** 14-Jun-2013 **Renewed:** 14-Jun-2016 **Bypass:** Wilkins 975XLD 3/4 (H)
**Shutoffs:** (yyy),qqq,ttt,uuuu,vvvv,xxxx,yyyy,kkkkk,llllll,iiiiii,jjjjjj,llllll,mmmmmm

---

**Type:** RPDA **Manufacturer:** Wilkins **Model:** 375ASTDA
**Size:** 2 1/2 **Orientation:** H **Meters:** (O), M
**Manual:** 10 **0.25% Pb:** Yes **Spare Parts Only:** No
**Approved:** 20-Feb-2014 **Renewed:** 20-Feb-2017 **Bypass:** Wilkins 975XLD 3/4 (H)
**Shutoffs:** (yyy),qqq,ttt,uuuu,vvvv,xxxx,yyyy,kkkkk,llllll,iiiiii,jjjjjj,llllll,mmmmmm
**Notes:** Lead free compliant version: By-pass Assembly Starting Serial # 3863325 and identified with NSF61 mark on meter


2018 © University of Southern California

**Type:** RPDA **Manufacturer:** Wilkins **Model:** 375ASTDA
**Size:** 3 **Orientation:** H **Meters:** (M),H,I,J,K,L,N,O,P,Q
**Manual:** 10 **0.25% Pb:** No **Spare Parts Only:** No
**Approved:** 14-Jun-2013 **Renewed:** 14-Jun-2016 **Bypass:** Wilkins 975XLD 3/4 (H)
**Shutoffs:** (yyy),qqq,ttt,uuuu,vvvv,xxxx,yyyy,kkkkk,lllll,iiiiii,jjjjjj,llllll,mmmmmm

---

**Type:** RPDA **Manufacturer:** Wilkins **Model:** 375ASTDA
**Size:** 3 **Orientation:** H **Meters:** (O), M
**Manual:** 10 **0.25% Pb:** Yes **Spare Parts Only:** No
**Approved:** 20-Feb-2014 **Renewed:** 20-Feb-2017 **Bypass:** Wilkins 975XLD 3/4 (H)
**Shutoffs:** (yyy),qqq,ttt,uuuu,vvvv,xxxx,yyyy,kkkkk,lllll,iiiiii,jjjjjj,llllll,mmmmmm
**Notes:** Lead free compliant version: By-pass Assembly Starting Serial # 3863325 and identified with NSF61 mark on meter

---

**Type:** RPDA **Manufacturer:** Wilkins **Model:** 375ASTDA
**Size:** 4 **Orientation:** H **Meters:** (M),H,I,J,K,L,N,O,P,Q
**Manual:** 10 **0.25% Pb:** No **Spare Parts Only:** No
**Approved:** 14-Jun-2013 **Renewed:** 14-Jun-2016 **Bypass:** Wilkins 975XLD 3/4" (H)
**Shutoffs:** (yyy),qqq,ttt,uuuu,vvvv,xxxx,yyyy,kkkkk,lllll,iiiiii,jjjjjj,llllll,mmmmmm

---

**Type:** RPDA **Manufacturer:** Wilkins **Model:** 375ASTDA
**Size:** 4 **Orientation:** H **Meters:** (O), M
**Manual:** 10 **0.25% Pb:** Yes **Spare Parts Only:** No
**Approved:** 20-Feb-2014 **Renewed:** 20-Feb-2017 **Bypass:** Wilkins 975XLD 3/4" (H)
**Shutoffs:** (yyy),qqq,ttt,uuuu,vvvv,xxxx,yyyy,kkkkk,lllll,iiiiii,jjjjjj,llllll,mmmmmm
**Notes:** Lead free compliant version: By-pass Assembly Starting Serial # 3863325 and identified with NSF61 mark on meter

---

**Type:** RPDA **Manufacturer:** Wilkins **Model:** 375ASTDA
**Size:** 6 **Orientation:** H **Meters:** (O), M
**Manual:** 10 **0.25% Pb:** Yes **Spare Parts Only:** No
**Approved:** 18-Sep-2014 **Renewed:** 18-Sep-2017 **Bypass:** Wilkins 975XLD 3/4" (H)
**Shutoffs:** (yyyy),ttt,www,yyy,uuuu,vvvv,xxxx,kkkkk,lllll,iiiiii,jjjjjj,llllll,mmmmmm

---

**Type:** RPDA **Manufacturer:** Wilkins **Model:** 375ASTDA
**Size:** 8 **Orientation:** H **Meters:** (O), M
**Manual:** 10 **0.25% Pb:** Yes **Spare Parts Only:** No
**Approved:** 18-Sep-2014 **Renewed:** 18-Sep-2017 **Bypass:** Wilkins 975XLD 3/4" (H)
**Shutoffs:** (yyyy),ttt,www,yyy,uuuu,vvvv,xxxx,kkkkk,lllll,iiiiii,jjjjjj,llllll,mmmmmm

**Type:** RPDA **Manufacturer:** Wilkins **Model:** 375ASTDA
**Size:** 10 **Orientation:** H **Meters:** (O)
**Manual:** 10 **0.25% Pb:** Yes **Spare Parts Only:** No
**Approved:** 18-Sep-2014 **Renewed:** 18-Sep-2017 **Bypass:** Wilkins 975XLD 3/4" (H)
**Shutoffs:** (yyyy),ttt,www,yyy,uuuu,vvvv,xxxx,kkkkk,lllll,iiiiii,jjjjjj,llllll,mmmmmm

---

**Type:** RPDA **Manufacturer:** Wilkins **Model:** 375ASTDAR
**Size:** 2 1/2 **Orientation:** H **Meters:** (O), M
**Manual:** 10 **0.25% Pb:** Yes **Spare Parts Only:** No
**Approved:** 09-Oct-2014 **Renewed:** 09-Oct-2017 **Bypass:** Wilkins 975XLD 3/4" (H)
**Shutoffs:** (yyyy),ttt,www,yyy,uuuu,vvvv,xxxx,kkkkk,lllll,iiiiii,jjjjjj,llllll,mmmmmm
**Notes:** Integral grooved spool between the #2 ck and #2 SOV - assembly length: min. 31" and max. 47 1/8"

---

**Type:** RPDA **Manufacturer:** Wilkins **Model:** 375ASTDAR
**Size:** 3 **Orientation:** H **Meters:** (O), M
**Manual:** 10 **0.25% Pb:** Yes **Spare Parts Only:** No
**Approved:** 09-Oct-2014 **Renewed:** 09-Oct-2017 **Bypass:** Wilkins 975XLD 3/4" (H)
**Shutoffs:** (yyyy),ttt,www,yyy,uuuu,vvvv,xxxx,kkkkk,lllll,iiiiii,jjjjjj,llllll,mmmmmm
**Notes:** Integral grooved spool between the #2 ck and #2 SOV - assembly length: min. 31 1/2" and max. 48 1/8"

---

**Type:** RPDA **Manufacturer:** Wilkins **Model:** 375ASTDAR
**Size:** 4 **Orientation:** H **Meters:** (O), M
**Manual:** 10 **0.25% Pb:** Yes **Spare Parts Only:** No
**Approved:** 09-Oct-2014 **Renewed:** 09-Oct-2017 **Bypass:** Wilkins 975XLD 3/4" (H)
**Shutoffs:** (yyyy),ttt,www,yyy,uuuu,vvvv,xxxx,kkkkk,lllll,iiiiii,jjjjjj,llllll,mmmmmm
**Notes:** Integral grooved spool between the #2 ck and #2 SOV - assembly length: min. 32 5/8" and max. 62 1/4"

---

**Type:** RPDA **Manufacturer:** Wilkins **Model:** 375ASTDAR
**Size:** 6 **Orientation:** H **Meters:** (O), M
**Manual:** 10 **0.25% Pb:** Yes **Spare Parts Only:** No
**Approved:** 18-Sep-2014 **Renewed:** 18-Sep-2017 **Bypass:** Wilkins 975XLD 3/4" (H)
**Shutoffs:** (yyyy),ttt,www,yyy,uuuu,vvvv,xxxx,kkkkk,lllll,iiiiii,jjjjjj,llllll,mmmmmm
**Notes:** Integral grooved spool between the #2 ck and #2 SOV - assembly length: min. 39" and max. 71 1/4"

---

**Type:** RPDA **Manufacturer:** Wilkins **Model:** 375ASTDAR
**Size:** 8 **Orientation:** H **Meters:** (O), M
**Manual:** 10 **0.25% Pb:** Yes **Spare Parts Only:** No
**Approved:** 18-Sep-2014 **Renewed:** 18-Sep-2017 **Bypass:** Wilkins 975XLD 3/4" (H)
**Shutoffs:** (yyyy),ttt,www,yyy,uuuu,vvvv,xxxx,kkkkk,lllll,iiiiii,jjjjjj,llllll,mmmmmm
**Notes:** Integral grooved spool between the #2 ck and #2 SOV - assembly length: min. 48 3/4" and max. 86"


2018 © University of Southern California

**Type:** RPDA **Manufacturer:** Wilkins **Model:** 375ASTDAR
**Size:** 10 **Orientation:** H **Meters:** (O)
**Manual:** 10 **0.25% Pb:** Yes **Spare Parts Only:** No
**Approved:** 18-Sep-2014 **Renewed:** 18-Sep-2017 **Bypass:** Wilkins 975XLD 3/4" (H)
**Shutoffs:** (yyyy),ttt,www,yyy,uuuu,vvvv,xxxx,kkkkk,lllll,iiiiii,jjjjjj,llllll,mmmmmm
**Notes:** Integral grooved spool between the #2 ck and #2 SOV - assembly length: min. 52 5/8" and max. 100 5/8"

---

**Type:** RPDA **Manufacturer:** Wilkins **Model:** 375DA
**Size:** 2 1/2 **Orientation:** H **Meters:** (M),C,D,E,F,G,H,I,J,K,L,N,O,P,Q,T
**Manual:** 9 **0.25% Pb:** No **Spare Parts Only:** No
**Approved:** 08-Oct-2002 **Renewed:** 08-Oct-2017 **Bypass:** Wilkins 975XLD 3/4 (H)
**Shutoffs:** (hh),ff,mm,uu,zz,vvvv,wwww,yyyy,zzzz,kkkkk,jjjjjj,kkkkkk,mmmmmm,nnnnnn

---

**Type:** RPDA **Manufacturer:** Wilkins **Model:** 375DA
**Size:** 2 1/2 **Orientation:** H **Meters:** (O), M
**Manual:** 9 **0.25% Pb:** Yes **Spare Parts Only:** No
**Approved:** 18-Feb-2014 **Renewed:** 18-Feb-2017 **Bypass:** Wilkins 975XLD 3/4 (H)
**Shutoffs:** (hh),qqq,vvv,www,yyyy,zzzz,kkkkk,mmmmmm,nnnnnn
**Notes:** Lead free compliant version: Starting Serial # M08452; By-pass Assembly Starting Serial # 3863325 and identified with NSF61 mark on meter

---

**Type:** RPDA **Manufacturer:** Wilkins **Model:** 375DA
**Size:** 3 **Orientation:** H **Meters:** (M),C,D,E,F,G,H,I,J,K,L,N,O,P,Q,T
**Manual:** 9 **0.25% Pb:** No **Spare Parts Only:** No
**Approved:** 08-Oct-2002 **Renewed:** 08-Oct-2017 **Bypass:** Wilkins 975XLD 3/4 (H)
**Shutoffs:** (hh),ff,mm,uu,zz,vvvv,wwww,yyyy,zzzz,kkkkk,jjjjjj,kkkkkk,mmmmmm,nnnnnn

---

**Type:** RPDA **Manufacturer:** Wilkins **Model:** 375DA
**Size:** 3 **Orientation:** H **Meters:** (O), M
**Manual:** 9 **0.25% Pb:** Yes **Spare Parts Only:** No
**Approved:** 18-Feb-2014 **Renewed:** 18-Feb-2017 **Bypass:** Wilkins 975XLD 3/4 (H)
**Shutoffs:** (hh),qqq,vvv,www,yyyy,zzzz,kkkkk,mmmmmm,nnnnnn
**Notes:** Lead free compliant version: Starting Serial # M08452; By-pass Assembly Starting Serial # 3863325 and identified with NSF61 mark on meter

**Type:** RPDA | **Manufacturer:** Wilkins | **Model:** 375DA
**Size:** 4 | **Orientation:** H | **Meters:** (M),C,D,E,F,G,H,I,J,K,L,N,O,P,Q,T
**Manual:** 9 | **0.25% Pb:** No | **Spare Parts Only:** No
**Approved:** 13-Dec-2000 | **Renewed:** 13-Dec-2015 | **Bypass:** Wilkins 975XLD 3/4 (H)
**Shutoffs:** (hh),ff,mm,uu,zz,qqq,vvv,www.zzz,eeee,vvvv,wwww,yyyy,zzzz,kkkkk,jjjjjj,kkkkkk,mmmmmm,nnnnnn

---

**Type:** RPDA | **Manufacturer:** Wilkins | **Model:** 375DA
**Size:** 4 | **Orientation:** H | **Meters:** (O), M
**Manual:** 9 | **0.25% Pb:** Yes | **Spare Parts Only:** No
**Approved:** 18-Feb-2014 | **Renewed:** 18-Feb-2017 | **Bypass:** Wilkins 975XLD 3/4 (H)
**Shutoffs:** (hh),qqq,vvv,www,yyyy,zzzz,kkkkk,mmmmmm,nnnnnn
**Notes:** Lead free compliant version: Starting Serial # M08452; By-pass Assembly Starting Serial # 3863325 and identified with NSF61 mark on meter

---

**Type:** RPDA | **Manufacturer:** Wilkins | **Model:** 375DA
**Size:** 6 | **Orientation:** H | **Meters:** (N),C,D,E,F,G,H,I,J,K,L,M,O,P,Q,T
**Manual:** 9 | **0.25% Pb:** No | **Spare Parts Only:** No
**Approved:** 31-May-2001 | **Renewed:** 31-May-2016 | **Bypass:** Wilkins 975XLD 3/4 (H)
**Shutoffs:** (hh),ff,mm,uu,zz,qqq,vvv,www.zzz,eeee,vvvv,wwww,yyyy,zzzz,kkkkk,jjjjjj,kkkkkk,mmmmmm,nnnnnn

---

**Type:** RPDA | **Manufacturer:** Wilkins | **Model:** 375DA
**Size:** 6 | **Orientation:** H | **Meters:** (O), M
**Manual:** 9 | **0.25% Pb:** Yes | **Spare Parts Only:** No
**Approved:** 18-Feb-2014 | **Renewed:** 18-Feb-2017 | **Bypass:** Wilkins 975XLD 3/4 (H)
**Shutoffs:** (hh),qqq,vvv,www,yyyy,zzzz,kkkkk,mmmmmm,nnnnnn
**Notes:** Lead free compliant version: Starting Serial # M08452; By-pass Assembly Starting Serial # 3863325 and identified with NSF61 mark on meter

---

**Type:** RPDA | **Manufacturer:** Wilkins | **Model:** 375DA
**Size:** 8 | **Orientation:** H | **Meters:** (N),G,H,I,J,K,L,M,O,P,Q,T
**Manual:** 9 | **0.25% Pb:** No | **Spare Parts Only:** No
**Approved:** 15-Jun-2004 | **Renewed:** 15-Jun-2016 | **Bypass:** Wilkins 975XLD 3/4" (H)
**Shutoffs:** (hh),ff,mm,uu,zz,qqq,vvv,www.zzz,eeee,vvvv,wwww,yyyy,zzzz,kkkkk,jjjjjj,kkkkkk,mmmmmm,nnnnnn


2018 © University of Southern California

**Type:** RPDA **Manufacturer:** Wilkins **Model:** 375DA
**Size:** 8 **Orientation:** H **Meters:** (O), M
**Manual:** 9 **0.25% Pb:** Yes **Spare Parts Only:** No
**Approved:** 18-Feb-2014 **Renewed:** 18-Feb-2017 **Bypass:** Wilkins 975XLD 3/4" (H)
**Shutoffs:** (hh),qqq,vvv,www,yyyy,zzzz,kkkkk,mmmmmm,nnnnnn
**Notes:** Lead free compliant version: Starting Serial # M08452; By-pass Assembly Starting Serial # 3863325 and identified with NSF61 mark on meter

---

**Type:** RPDA **Manufacturer:** Wilkins **Model:** 375DA
**Size:** 10 **Orientation:** H **Meters:** (N),G,H,I,J,K,L,M,O,P,Q,T
**Manual:** 9 **0.25% Pb:** No **Spare Parts Only:** No
**Approved:** 22-Nov-2004 **Renewed:** 22-Nov-2016 **Bypass:** Wilkins 975XLD 3/4" (H)
**Shutoffs:** (hh),ff,mm,uu,zz,qqq,vvv,www.zzz,eeee,vvvv,wwww,yyyy,zzzz,kkkkk,jjjjjj,kkkkkk,mmmmmm,nnnnnn

---

**Type:** RPDA **Manufacturer:** Wilkins **Model:** 375DA
**Size:** 10 **Orientation:** H **Meters:** (O), M
**Manual:** 9 **0.25% Pb:** Yes **Spare Parts Only:** No
**Approved:** 18-Feb-2014 **Renewed:** 18-Feb-2017 **Bypass:** Wilkins 975XLD 3/4" (H)
**Shutoffs:** (hh),qqq,vvv,www,yyyy,zzzz,kkkkk,mmmmmm,nnnnnn
**Notes:** Lead free compliant version: Starting Serial # M08452; By-pass Assembly Starting Serial # 3863325 and identified with NSF61 mark on meter

---

**Type:** RPDA **Manufacturer:** Wilkins **Model:** 475DA
**Size:** 4 **Orientation:** VUVD **Meters:** (N),F,G,H,I,J,K,L,M,O,P,Q,T
**Manual:** 9 **0.25% Pb:** No **Spare Parts Only:** No
**Approved:** 20-Mar-2001 **Renewed:** 20-Mar-2016 **Bypass:** Wilkins 975XLD 3/4 (H)
**Shutoffs:** (qqq),ttt,www,yyy,zzz,eeee,uuuu,vvvv,xxxx,yyyy,kkkkk,lllll,iiiiii,jjjjjj,llllll,mmmmmm

---

**Type:** RPDA **Manufacturer:** Wilkins **Model:** 475DA
**Size:** 4 **Orientation:** VUVD **Meters:** (O), M
**Manual:** 9 **0.25% Pb:** Yes **Spare Parts Only:** No
**Approved:** 18-Feb-2014 **Renewed:** 18-Feb-2017 **Bypass:** Wilkins 975XLD 3/4 (H)
**Shutoffs:** (hh),qqq,vvv,www,yyyy,zzzz,kkkkk,mmmmmm,nnnnnn
**Notes:** Lead free compliant version: Starting Serial # R04847; By-pass Assembly Starting Serial # 3863325 and identified with NSF61 mark on meter

---

**Type:** RPDA **Manufacturer:** Wilkins **Model:** 475DA
**Size:** 6 **Orientation:** VUVD **Meters:** (N),F,G,H,I,J,K,L,M,O,P,Q,T
**Manual:** 9 **0.25% Pb:** No **Spare Parts Only:** No
**Approved:** 31-May-2001 **Renewed:** 31-May-2016 **Bypass:** Wilkins 975XLD 3/4 (H)
**Shutoffs:** (qqq),ttt,www,yyy,zzz,eeee,uuuu,vvvv,xxxx,yyyy,kkkkk,lllll,iiiiii,jjjjjj,llllll,mmmmmm

**Type:** RPDA **Manufacturer:** Wilkins **Model:** 475DA
**Size:** 6 **Orientation:** VUVD **Meters:** (O), M
**Manual:** 9 **0.25% Pb:** Yes **Spare Parts Only:** No
**Approved:** 18-Feb-2014 **Renewed:** 18-Feb-2017 **Bypass:** Wilkins 975XLD 3/4 (H)
**Shutoffs:** (hh),qqq,vvv,www,yyyy,zzzz,kkkkk,mmmmmm,nnnnnn
**Notes:** Lead free compliant version: Starting Serial # R04847; By-pass Assembly Starting Serial # 3863325 and identified with NSF61 mark on meter

---

**Type:** RPDA **Manufacturer:** Wilkins **Model:** 475DA
**Size:** 8 **Orientation:** VUVD **Meters:** (M),B,C,D,E,F,G,H,I,J,K,L,N,O,P,Q,T
**Manual:** 9 **0.25% Pb:** No **Spare Parts Only:** No
**Approved:** 11-Aug-2004 **Renewed:** 11-Aug-2016 **Bypass:** Wilkins 975XLD 3/4 (H)
**Shutoffs:** (qqq),ttt,www,yyy,zzz,eeee,uuuu,vvvv,xxxx,yyyy,kkkkk,lllll,iiiiii,jjjjjj,llllll,mmmmmm

---

**Type:** RPDA **Manufacturer:** Wilkins **Model:** 475DA
**Size:** 8 **Orientation:** VUVD **Meters:** (O), M
**Manual:** 9 **0.25% Pb:** Yes **Spare Parts Only:** No
**Approved:** 18-Feb-2014 **Renewed:** 18-Feb-2017 **Bypass:** Wilkins 975XLD 3/4 (H)
**Shutoffs:** (hh),qqq,vvv,www,yyyy,zzzz,mmmmmm,nnnnnn
**Notes:** Lead free compliant version: Starting Serial # R04847; By-pass Assembly Starting Serial # 3863325 and identified with NSF61 mark on meter

---

**Type:** RPDA **Manufacturer:** Wilkins **Model:** 475DAV
**Size:** 4 **Orientation:** VUVU **Meters:** (N),F,G,H,I,J,K,L,M,O,P,Q,T
**Manual:** 9 **0.25% Pb:** No **Spare Parts Only:** No
**Approved:** 20-Mar-2001 **Renewed:** 20-Mar-2016 **Bypass:** Wilkins 975XLD 3/4 (H)
**Shutoffs:** (qqq),mm,ttt,www,yyy,zzz,eeee,uuuu,vvvv,xxxx,yyyy,kkkkk,lllll,iiiiii,jjjjjj,llllll,mmmmmm

---

**Type:** RPDA **Manufacturer:** Wilkins **Model:** 475DAV
**Size:** 4 **Orientation:** VUVU **Meters:** (O), M
**Manual:** 9 **0.25% Pb:** Yes **Spare Parts Only:** No
**Approved:** 18-Feb-2014 **Renewed:** 18-Feb-2017 **Bypass:** Wilkins 975XLD 3/4 (H)
**Shutoffs:** (hh),qqq,vvv,www,yyyy,zzzz,kkkkk,mmmmmm,nnnnnn
**Notes:** Lead free compliant version: Starting Serial # R04847; By-pass Assembly Starting Serial # 3863325 and identified with NSF61 mark on meter

**Type:** RPDA **Manufacturer:** Wilkins **Model:** 475DAV
**Size:** 6 **Orientation:** VUVU **Meters:** (N),F,G,H,I,J,K,L,M,O,P,Q,T
**Manual:** 9 **0.25% Pb:** No **Spare Parts Only:** No
**Approved:** 20-Jul-2004 **Renewed:** 20-Jul-2016 **Bypass:** Wilkins 975XLD 3/4 (H)
**Shutoffs:** (qqq),mm,ttt,www,yyy,zzz,eeee,uuuu,vvvv,xxxx,yyyy,kkkkk,lllll,iiiiii,jjjjjj,llllll,mmmmmm


2018 © University of Southern California

**Type:** RPDA **Manufacturer:** Wilkins **Model:** 475DAV
**Size:** 6 **Orientation:** VUVU **Meters:** (O), M
**Manual:** 9 **0.25% Pb:** Yes **Spare Parts Only:** No
**Approved:** 18-Feb-2014 **Renewed:** 18-Feb-2017 **Bypass:** Wilkins 975XLD 3/4 (H)
**Shutoffs:** (hh),qqq,vvv,www,yyyy,zzzz,kkkkk,mmmmmm,nnnnnn
**Notes:** Lead free compliant version: Starting Serial # R04847; By-pass Assembly Starting Serial # 3863325 and identified with NSF61 mark on meter

---

**Type:** RPDA **Manufacturer:** Wilkins **Model:** 475DAV
**Size:** 8 **Orientation:** VUVU **Meters:** (M),B,C,D,E,F,G,H,I,J,K,L,N,O,P,Q,T
**Manual:** 9 **0.25% Pb:** No **Spare Parts Only:** No
**Approved:** 24-Apr-2004 **Renewed:** 24-Apr-2016 **Bypass:** Wilkins 975XLD 3/4 (H)
**Shutoffs:** (qqq),mm,ttt,www,yyy,zzz,eeee,uuuu,vvvv,xxxx,yyyy,kkkkk,lllll,iiiiii,jjjjjj,llllll,mmmmmm

---

**Type:** RPDA **Manufacturer:** Wilkins **Model:** 475DAV
**Size:** 8 **Orientation:** VUVU **Meters:** (O), M
**Manual:** 9 **0.25% Pb:** Yes **Spare Parts Only:** No
**Approved:** 18-Feb-2014 **Renewed:** 18-Feb-2017 **Bypass:** Wilkins 975XLD 3/4 (H)
**Shutoffs:** (hh),qqq,vvv,www,yyyy,zzzz,mmmmmm,nnnnnn
**Notes:** Lead free compliant version: Starting Serial # R04847; By-pass Assembly Starting Serial # 3863325 and identified with NSF61 mark on meter

---

**Type:** RPDA **Manufacturer:** Wilkins **Model:** 975DA
**Size:** 2 1/2 **Orientation:** H **Meters:** (M),A,B,C,D,E,F,G,H,I,J,K,L,N,O,P,Q,T
**Manual:** 8 **0.25% Pb:** No **Spare Parts Only:** Yes
**Approved:** 01-Feb-1994 **Renewed:** 01-Feb-2018 **Bypass:** Wilkins 975 3/4 (H)
**Shutoffs:** (hh),ff,uu,zz,vvvv,wwww,yyyy,zzzz

---

**Type:** RPDA **Manufacturer:** Wilkins **Model:** 975DA
**Size:** 3 **Orientation:** H **Meters:** (M),A,B,C,D,E,F,G,H,I,J,K,L,N,O,P,Q,T
**Manual:** 8 **0.25% Pb:** No **Spare Parts Only:** Yes
**Approved:** 01-Feb-1994 **Renewed:** 01-Feb-2018 **Bypass:** Wilkins 975 3/4 (H)
**Shutoffs:** (hh),ff,uu,zz,vvvv,wwww,yyyy,zzzz

**Type:** RPDA
**Manufacturer:** Wilkins
**Model:** 975DA
**Size:** 4
**Orientation:** H
**Meters:** (M),A,B,C,D,E,F,G,H,I,J,K,L,N,O,P,Q,T
**Manual:** 8
**0.25% Pb:** No
**Spare Parts Only:** Yes
**Approved:** 01-Nov-1993
**Renewed:** 01-Nov-2017
**Bypass:** Wilkins 975 3/4 (H)
**Shutoffs:** hh,ff,mm,uu,zz,vvvv,wwww,yyyy,zzzz

---

**Type:** RPDA
**Manufacturer:** Wilkins
**Model:** 975DA
**Size:** 6
**Orientation:** H
**Meters:** (M),A,B,C,D,E,F,G,H,I,J,K,L,N,O,P,Q,T
**Manual:** 8
**0.25% Pb:** No
**Spare Parts Only:** Yes
**Approved:** 14-Mar-1994
**Renewed:** 14-Mar-2018
**Bypass:** Wilkins 975 3/4 (H)
**Shutoffs:** hh,ff,mm,uu,zz,vvvv,wwww,yyyy,zzzz

---

**Type:** RPDA
**Manufacturer:** Wilkins
**Model:** 975DA
**Size:** 8
**Orientation:** H
**Meters:** (M),A,B,C,D,E,F,G,H,I,J,K,L,N,O,P,Q,T
**Manual:** 8
**0.25% Pb:** No
**Spare Parts Only:** Yes
**Approved:** 05-Dec-1996
**Renewed:** 05-Dec-2017
**Bypass:** Wilkins 975 3/4 (H)
**Shutoffs:** (hh),ff,uu,zz,vvvv,wwww,yyyy.zzzz

---

**Type:** RPDA
**Manufacturer:** Wilkins
**Model:** 975DA
**Size:** 10
**Orientation:** H
**Meters:** (M),A,B,C,D,E,F,G,H,I,J,K,L,N,O,P,Q,T
**Manual:** 8
**0.25% Pb:** No
**Spare Parts Only:** Yes
**Approved:** 05-Dec-1996
**Renewed:** 05-Dec-2017
**Bypass:** Wilkins 975 3/4 (H)
**Shutoffs:** (hh),ff,uu,zz,vvvv,wwww,yyyy.zzzz

---

**Type:** RPDA-II
**Manufacturer:** Apollo/Conbraco
**Model:** RPDA24A
**Size:** 1 1/2
**Orientation:** H
**Meters:** (M),G,H,I,J,K,L,N,O,P,Q,T
**Manual:** 10
**0.25% Pb:** No
**Spare Parts Only:** No
**Approved:** 31-Oct-2016
**Renewed:**
**Bypass:** Apollo 1/2" Model CVA4A (HVD)
**Shutoffs:** (dddddd)

---

**Type:** RPDA-II
**Manufacturer:** Apollo/Conbraco
**Model:** RPDA24A
**Size:** 2
**Orientation:** H
**Meters:** (M),G,H,I,J,K,L,N,O,P,Q,T
**Manual:** 10
**0.25% Pb:** No
**Spare Parts Only:** No
**Approved:** 31-Oct-2016
**Renewed:**
**Bypass:** Apollo 1/2" Model CVA4A (HVD)
**Shutoffs:** (dddddd)


2018 © University of Southern California

**Type:** RPDA-II
**Manufacturer:** Apollo/Conbraco
**Model:** RPDA2LF4A
**Size:** 1 1/2
**Orientation:** H
**Meters:** (M),G,H,I,J,K,L,N,O,P,Q,T
**Manual:** 10
**0.25% Pb:** No
**Spare Parts Only:** No
**Approved:** 31-Oct-2016
**Renewed:**
**Bypass:** Apollo 1/2" Model CVALF4A (HVD)
**Shutoffs:** (eeeeee)

---

**Type:** RPDA-II
**Manufacturer:** Apollo/Conbraco
**Model:** RPDA2LF4A
**Size:** 2
**Orientation:** H
**Meters:** (M),G,H,I,J,K,L,N,O,P,Q,T
**Manual:** 10
**0.25% Pb:** No
**Spare Parts Only:** No
**Approved:** 31-Oct-2016
**Renewed:**
**Bypass:** Apollo 1/2" Model CVALF4A (HVD)
**Shutoffs:** (eeeeee)

---

**Type:** RPDA-II
**Manufacturer:** Apollo/Conbraco
**Model:** RPDA2LF4A
**Size:** 2 1/2
**Orientation:** H
**Meters:** (M),G,H,I,J,K,L,N,O,P,Q,T
**Manual:** 10
**0.25% Pb:** No
**Spare Parts Only:** No
**Approved:** 15-Dec-2017
**Renewed:**
**Bypass:** Apollo 1/2" Model CVALF4A (HVD)
**Shutoffs:** (xxxxx),yyy,yyyyy,zzzzz,aaaaaa

---

**Type:** RPDA-II
**Manufacturer:** Apollo/Conbraco
**Model:** RPDA2LF4A
**Size:** 3
**Orientation:** H
**Meters:** (M),G,H,I,J,K,L,N,O,P,Q,T
**Manual:** 10
**0.25% Pb:** No
**Spare Parts Only:** No
**Approved:** 15-Dec-2017
**Renewed:**
**Bypass:** Apollo 1/2" Model CVALF4A (HVD)
**Shutoffs:** (xxxxx),yyy,yyyyy,zzzzz,aaaaaa

---

**Type:** RPDA-II
**Manufacturer:** Apollo/Conbraco
**Model:** RPDA2LF4A
**Size:** 4
**Orientation:** H
**Meters:** (M),G,H,I,J,K,L,N,O,P,Q,T
**Manual:** 10
**0.25% Pb:** No
**Spare Parts Only:** No
**Approved:** 15-Dec-2017
**Renewed:**
**Bypass:** Apollo 1/2" Model CVALF4A (HVD)
**Shutoffs:** (xxxxx),yyy,yyyyy,zzzzz,aaaaaa

---

**Type:** RPDA-II
**Manufacturer:** Apollo/Conbraco
**Model:** RPDA2LF4A
**Size:** 6
**Orientation:** H
**Meters:** (M),G,H,I,J,K,L,N,O,P,Q,T
**Manual:** 10
**0.25% Pb:** No
**Spare Parts Only:** No
**Approved:** 15-Dec-2017
**Renewed:**
**Bypass:** Apollo 1/2" Model CVALF4A (HVD)
**Shutoffs:** (xxxxx),yyy,yyyyy,zzzzz,aaaaaa

**Type:** RPDA-II
**Manufacturer:** Apollo/Conbraco
**Model:** RPDA2LF4A
**Size:** 8
**Orientation:** H
**Meters:** (M),G,H,I,J,K,L,N,O,P,Q,T
**Manual:** 10
**0.25% Pb:** No
**Spare Parts Only:** No
**Approved:** 15-Dec-2017
**Renewed:**
**Bypass:** Apollo 1/2" Model CVALF4A (HVD)
**Shutoffs:** (xxxxx),yyy,yyyyy,zzzzz,aaaaaa

---

**Type:** RPDA-II
**Manufacturer:** Apollo/Conbraco
**Model:** RPDA2LF4AR
**Size:** 2 1/2
**Orientation:** H
**Meters:** (M),G,H,I,J,K,L,N,O,P,Q,T
**Manual:** 10
**0.25% Pb:** No
**Spare Parts Only:** No
**Approved:** 27-Mar-2018
**Renewed:**
**Bypass:** Apollo 1/2" Model CVALF4A (HVD)
**Shutoffs:** (xxxxx),zzz,cccc,dddd,kkkk,llll,mmmm,nnnn,yyyyy,zzzzz,aaaaaa
**Notes:** Integral Stainless Steel grooved spool between the #2 ck and #2 SOV - assembly length: min. 34" and max. 47 1/8"

---

**Type:** RPDA-II
**Manufacturer:** Apollo/Conbraco
**Model:** RPDA2LF4AR
**Size:** 3
**Orientation:** H
**Meters:** (M),G,H,I,J,K,L,N,O,P,Q,T
**Manual:** 10
**0.25% Pb:** No
**Spare Parts Only:** No
**Approved:** 27-Mar-2018
**Renewed:**
**Bypass:** Apollo 1/2" Model CVALF4A (HVD)
**Shutoffs:** (xxxxx),zzz,cccc,dddd,kkkk,llll,mmmm,nnnn,yyyyy,zzzzz,aaaaaa
**Notes:** Integral Stainless Steel grooved spool between the #2 ck and #2 SOV - assembly length: min. 35" and max. 48 1/8"

---

**Type:** RPDA-II
**Manufacturer:** Apollo/Conbraco
**Model:** RPDA2LF4AR
**Size:** 4
**Orientation:** H
**Meters:** (M),G,H,I,J,K,L,N,O,P,Q,T
**Manual:** 10
**0.25% Pb:** No
**Spare Parts Only:** No
**Approved:** 27-Mar-2018
**Renewed:**
**Bypass:** Apollo 1/2" Model CVALF4A (HVD)
**Shutoffs:** (xxxxx),zzz,cccc,dddd,kkkk,llll,mmmm,nnnn,yyyyy,zzzzz,aaaaaa
**Notes:** Integral Stainless Steel grooved spool between the #2 ck and #2 SOV - assembly length: min. 37 3/8" and max. 62 1/4"

---

**Type:** RPDA-II
**Manufacturer:** Apollo/Conbraco
**Model:** RPDA2LF4AR
**Size:** 6
**Orientation:** H
**Meters:** (M),G,H,I,J,K,L,N,O,P,Q,T
**Manual:** 10
**0.25% Pb:** No
**Spare Parts Only:** No
**Approved:** 27-Mar-2018
**Renewed:**
**Bypass:** Apollo 1/2" Model CVALF4A (HVD)
**Shutoffs:** (xxxxx),zzz,cccc,dddd,kkkk,llll,mmmm,nnnn,yyyyy,zzzzz,aaaaaa
**Notes:** Integral Stainless Steel grooved spool between the #2 ck and #2 SOV - assembly length: min. 46" and max. 71 1/4"


2018 © University of Southern California

**Type:** RPDA-II
**Size:** 8
**Manual:** 10
**Approved:** 27-Mar-2018
**Manufacturer:** Apollo/Conbraco
**Orientation:** H
**0.25% Pb:** No
**Renewed:**
**Model:** RPDA2LF4AR
**Meters:** (M),G,H,I,J,K,L,N,O,P,Q,T
**Spare Parts Only:** No
**Bypass:** Apollo 1/2" Model CVALF4A (HVD)
**Shutoffs:** (xxxxx),zzz,cccc,dddd,kkkk,llll,mmmm,nnnn,yyyyy,zzzzz,aaaaaa
**Notes:** Integral Stainless Steel grooved spool between the #2 ck and #2 SOV - assembly length: min. 55 3/4" and max. 86"

---

**Type:** RPDA-II
**Size:** 2 1/2
**Manual:** 10
**Approved:** 20-Jan-2017
**Shutoffs:** (int)
**Manufacturer:** Backflow Direct
**Orientation:** H
**0.25% Pb:** Yes
**Renewed:**
**Model:** Deringer 50
**Meters:** (O),G,H,I,J,K,L,M,N,Q,T
**Spare Parts Only:** No
**Bypass:** Backflow Direct 1/2" CV(HVD)

---

**Type:** RPDA-II
**Size:** 3
**Manual:** 10
**Approved:** 20-Jan-2017
**Shutoffs:** (int)
**Manufacturer:** Backflow Direct
**Orientation:** H
**0.25% Pb:** Yes
**Renewed:**
**Model:** Deringer 50
**Meters:** (O),G,H,I,J,K,L,M,N,Q,T
**Spare Parts Only:** No
**Bypass:** Backflow Direct 1/2" CV(HVD)

---

**Type:** RPDA-II
**Size:** 4
**Manual:** 10
**Approved:** 20-Jan-2017
**Shutoffs:** (int)
**Manufacturer:** Backflow Direct
**Orientation:** H
**0.25% Pb:** Yes
**Renewed:**
**Model:** Deringer 50
**Meters:** (O),G,H,I,J,K,L,M,N,Q,T
**Spare Parts Only:** No
**Bypass:** Backflow Direct 1/2" CV(HVD)

---

**Type:** RPDA-II
**Size:** 8
**Manual:** 10
**Approved:** 27-Jun-2017
**Shutoffs:** (int)
**Manufacturer:** Backflow Direct
**Orientation:** H
**0.25% Pb:** Yes
**Renewed:**
**Model:** Deringer 50
**Meters:** (O),G,H,I,J,K,L,M,N,Q,T
**Spare Parts Only:** No
**Bypass:** Backflow Direct 1/2" CV(HVD)

---

**Type:** RPDA-II
**Size:** 2 1/2
**Manual:** 10
**Approved:** 24-Oct-2018
**Shutoffs:** (ssssss), tttttt
**Manufacturer:** Backflow Direct
**Orientation:** H
**0.25% Pb:** Yes
**Renewed:**
**Model:** Deringer 50G
**Meters:** (O),G,H,I,J,K,L,M,N,Q,T
**Spare Parts Only:** No
**Bypass:** Backflow Direct 1/2" CV(HVD)

**Type:** RPDA-II
**Manufacturer:** Backflow Direct
**Model:** Deringer 50G
**Size:** 3
**Orientation:** H
**Meters:** (O),G,H,I,J,K,L,M,N,Q,T
**Manual:** 10
**0.25% Pb:** Yes
**Spare Parts Only:** No
**Approved:** 24-Oct-2018
**Renewed:**
**Bypass:** Backflow Direct 1/2" CV(HVD)
**Shutoffs:** (ssssss), tttttt

---

**Type:** RPDA-II
**Manufacturer:** Backflow Direct
**Model:** Deringer 50G
**Size:** 4
**Orientation:** H
**Meters:** (O),G,H,I,J,K,L,M,N,Q,T
**Manual:** 10
**0.25% Pb:** Yes
**Spare Parts Only:** No
**Approved:** 24-Oct-2018
**Renewed:**
**Bypass:** Backflow Direct 1/2" CV(HVD)
**Shutoffs:** (ssssss), tttttt

---

**Type:** RPDA-II
**Manufacturer:** Backflow Direct
**Model:** Deringer 50X
**Size:** 6
**Orientation:** H
**Meters:** (O),G,H,I,J,K,L,M,N,Q,T
**Manual:** 10
**0.25% Pb:** Yes
**Spare Parts Only:** No
**Approved:** 27-Jun-2017
**Renewed:**
**Bypass:** Backflow Direct 1/2" CV(HVD)
**Shutoffs:** (int)

---

**Type:** RPDA-II
**Manufacturer:** Febco
**Model:** LF866
**Size:** 2 1/2
**Orientation:** H
**Meters:** (O),G,H,I,J,K,L,M,N,P,Q,T
**Manual:** 10
**0.25% Pb:** Yes
**Spare Parts Only:** No
**Approved:** 20-Mar-2015
**Renewed:** 20-Mar-2018
**Bypass:** Watts 3/4" LF619 (H)
**Shutoffs:** (mm), ll,oo,pp,zzz,cccc,dddd,eeee,ffff,gggg,nnnnn

---

**Type:** RPDA-II
**Manufacturer:** Febco
**Model:** LF866
**Size:** 3
**Orientation:** H
**Meters:** (O),G,H,I,J,K,L,M,N,P,Q,T
**Manual:** 10
**0.25% Pb:** Yes
**Spare Parts Only:** No
**Approved:** 20-Mar-2015
**Renewed:** 20-Mar-2018
**Bypass:** Watts 3/4" LF619 (H)
**Shutoffs:** (mm), ll,oo,pp,zzz,cccc,dddd,eeee,ffff,gggg,nnnnn

---

**Type:** RPDA-II
**Manufacturer:** Febco
**Model:** LF866
**Size:** 4
**Orientation:** H
**Meters:** (O),G,H,I,J,K,L,M,N,P,Q,T
**Manual:** 10
**0.25% Pb:** Yes
**Spare Parts Only:** No
**Approved:** 26-Jan-2015
**Renewed:** 26-Jan-2018
**Bypass:** Watts 3/4" LF619 (H)
**Shutoffs:** (mm), ll,oo,pp,zzz,cccc,dddd,eeee,ffff,gggg,nnnnn

---

**Type:** RPDA-II
**Manufacturer:** Febco
**Model:** LF866
**Size:** 6
**Orientation:** H
**Meters:** (O),G,H,I,J,K,L,M,N,P,Q,T
**Manual:** 10
**0.25% Pb:** Yes
**Spare Parts Only:** No
**Approved:** 13-Mar-2015
**Renewed:** 13-Mar-2018
**Bypass:** Watts 3/4" LF619 (H)
**Shutoffs:** (mm), ll,oo,pp,zzz,cccc,dddd,eeee,ffff,gggg,nnnnn


2018 © University of Southern California

**Type:** RPDA-II **Manufacturer:** Febco **Model:** LF866
**Size:** 8 **Orientation:** H **Meters:** (O),G,H,I,J,K,L,M,N,P,Q,T
**Manual:** 10 **0.25% Pb:** Yes **Spare Parts Only:** No
**Approved:** 07-Jul-2015 **Renewed:** 07-Jul-2018 **Bypass:** Watts 3/4" LF619 (H)
**Shutoffs:** (mm), ll,oo,pp,zzz,cccc,dddd,eeee,ffff,gggg,nnnnn

---

**Type:** RPDA-II **Manufacturer:** Febco **Model:** LF866
**Size:** 10 **Orientation:** H **Meters:** (O),G,H,I,J,K,L,M,N,P,Q,T
**Manual:** 10 **0.25% Pb:** Yes **Spare Parts Only:** No
**Approved:** 07-Jul-2015 **Renewed:** 07-Jul-2018 **Bypass:** Watts 3/4" LF619 (H)
**Shutoffs:** (mm), ll,oo,pp,zzz,cccc,dddd,eeee,ffff,gggg,nnnnn

---

**Type:** RPDA-II **Manufacturer:** Febco **Model:** LF886V
**Size:** 2 1/2 **Orientation:** VUVD **Meters:** (O),G,H,I,J,K,L,M,N,P,Q,T
**Manual:** 10 **0.25% Pb:** Yes **Spare Parts Only:** No
**Approved:** 20-Mar-2015 **Renewed:** 20-Mar-2018 **Bypass:** Watts 3/4" LF619 (HVU)
**Shutoffs:** (mm), ll,oo,pp,zzz,cccc,dddd,eeee,ffff,gggg,nnnnn

---

**Type:** RPDA-II **Manufacturer:** Febco **Model:** LF886V
**Size:** 2 1/2 **Orientation:** VUVU **Meters:** (O),G,H,I,J,K,L,M,N,P,Q,T
**Manual:** 10 **0.25% Pb:** Yes **Spare Parts Only:** No
**Approved:** 20-Mar-2015 **Renewed:** 20-Mar-2018 **Bypass:** Watts 3/4" LF619 (HVD)
**Shutoffs:** (mm), ll,oo,pp,zzz,cccc,dddd,eeee,ffff,gggg,nnnnn

---

**Type:** RPDA-II **Manufacturer:** Febco **Model:** LF886V
**Size:** 3 **Orientation:** VUVD **Meters:** (O),G,H,I,J,K,L,M,N,P,Q,T
**Manual:** 10 **0.25% Pb:** Yes **Spare Parts Only:** No
**Approved:** 20-Mar-2015 **Renewed:** 20-Mar-2018 **Bypass:** Watts 3/4" LF619 (HVU)
**Shutoffs:** (mm), ll,oo,pp,zzz,cccc,dddd,eeee,ffff,gggg,nnnnn

---

**Type:** RPDA-II **Manufacturer:** Febco **Model:** LF886V
**Size:** 3 **Orientation:** VUVU **Meters:** (O),G,H,I,J,K,L,M,N,P,Q,T
**Manual:** 10 **0.25% Pb:** Yes **Spare Parts Only:** No
**Approved:** 20-Mar-2015 **Renewed:** 20-Mar-2018 **Bypass:** Watts 3/4" LF619 (HVD)
**Shutoffs:** (mm), ll,oo,pp,zzz,cccc,dddd,eeee,ffff,gggg,nnnnn

---

**Type:** RPDA-II **Manufacturer:** Febco **Model:** LF886V
**Size:** 4 **Orientation:** VUVD **Meters:** (O),G,H,I,J,K,L,M,N,P,Q,T
**Manual:** 10 **0.25% Pb:** Yes **Spare Parts Only:** No
**Approved:** 26-Jan-2015 **Renewed:** 26-Jan-2018 **Bypass:** Watts 3/4" LF619 (HVU)
**Shutoffs:** (mm), ll,oo,pp,zzz,cccc,dddd,eeee,ffff,gggg,nnnnn

**Type:** RPDA-II **Manufacturer:** Febco **Model:** LF886V
**Size:** 4 **Orientation:** VUVU **Meters:** (O),G,H,I,J,K,L,M,N,P,Q,T
**Manual:** 10 **0.25% Pb:** Yes **Spare Parts Only:** No
**Approved:** 26-Jan-2015 **Renewed:** 26-Jan-2018 **Bypass:** Watts 3/4" LF619 (HVD)
**Shutoffs:** (mm), ll,oo,pp,zzz,cccc,dddd,eeee,ffff,gggg,nnnnn

---

**Type:** RPDA-II **Manufacturer:** Febco **Model:** LF886V
**Size:** 6 **Orientation:** VUVD **Meters:** (O),G,H,I,J,K,L,M,N,P,Q,T
**Manual:** 10 **0.25% Pb:** Yes **Spare Parts Only:** No
**Approved:** 26-Jan-2015 **Renewed:** 26-Jan-2018 **Bypass:** Watts 3/4" LF619 (HVU)
**Shutoffs:** (mm), ll,oo,pp,zzz,cccc,dddd,eeee,ffff,gggg,nnnnn

---

**Type:** RPDA-II **Manufacturer:** Febco **Model:** LF886V
**Size:** 6 **Orientation:** VUVU **Meters:** (O),J,K,L,M,N,P,Q
**Manual:** 10 **0.25% Pb:** Yes **Spare Parts Only:** No
**Approved:** 26-Jan-2015 **Renewed:** 26-Jan-2018 **Bypass:** Watts 3/4" LF619 (HVD)
**Shutoffs:** (mm), ll,oo,pp,zzz,cccc,dddd,eeee,ffff,gggg,nnnnn

---

**Type:** RPDA-II **Manufacturer:** Febco **Model:** LF886V
**Size:** 8 **Orientation:** VUVD **Meters:** (O)
**Manual:** 10 **0.25% Pb:** Yes **Spare Parts Only:** No
**Approved:** 07-Jul-2015 **Renewed:** 07-Jul-2018 **Bypass:** Watts 3/4" LF619 (HVU)
**Shutoffs:** (mm), ll,oo,pp,zzz,cccc,dddd,eeee,ffff,gggg,nnnnn

---

**Type:** RPDA-II **Manufacturer:** Febco **Model:** LF886V
**Size:** 8 **Orientation:** VUVU **Meters:** (O)
**Manual:** 10 **0.25% Pb:** Yes **Spare Parts Only:** No
**Approved:** 07-Jul-2015 **Renewed:** 07-Jul-2018 **Bypass:** Watts 3/4" LF619 (HVD)
**Shutoffs:** (mm), ll,oo,pp,zzz,cccc,dddd,eeee,ffff,gggg,nnnnn

---

**Type:** RPDA-II **Manufacturer:** Febco **Model:** LF886V
**Size:** 10 **Orientation:** VUVD **Meters:** (O),G,H,I,J,K,L,M,N,P,Q,T
**Manual:** 10 **0.25% Pb:** Yes **Spare Parts Only:** No
**Approved:** 29-May-2018 **Renewed:** **Bypass:** Watts 3/4" LF619 (HVU)
**Shutoffs:** (mm),ll,oo,pp,zzz,cccc,dddd,eeee,ffff,gggg,nnnnn

---

**Type:** RPDA-II **Manufacturer:** Febco **Model:** LF886V
**Size:** 10 **Orientation:** VUVU **Meters:** (O),G,H,I,J,K,L,M,N,P,Q,T
**Manual:** 10 **0.25% Pb:** Yes **Spare Parts Only:** No
**Approved:** 29-May-2018 **Renewed:** **Bypass:** Watts 3/4" LF619 (HVD)
**Shutoffs:** (mm),ll,oo,pp,zzz,cccc,dddd,eeee,ffff,gggg,nnnnn


2018 © University of Southern California

**Type:** SVB
**Size:** 3/8
**Manual:** 9
**Approved:** 18-Nov-1998
**Shutoffs:** (vv),xx,ooo,hhhh,pppp

**Manufacturer:** Watts
**Orientation:** VUH
**0.25% Pb:** No
**Renewed:** 18-Nov-2016

**Model:** 008PCQT
**Meters:**
**Spare Parts Only:** Yes
**Bypass:**

---

**Type:** SVB
**Size:** 1/2
**Manual:** 9
**Approved:** 18-Nov-1998
**Shutoffs:** (vv),xx,ooo,hhhh,pppp,rrrrr

**Manufacturer:** Watts
**Orientation:** VUH
**0.25% Pb:** No
**Renewed:** 18-Nov-2016

**Model:** 008PCQT
**Meters:**
**Spare Parts Only:** Yes
**Bypass:**

---

**Type:** SVB
**Size:** 3/4
**Manual:** 9
**Approved:** 19-Jun-2000
**Shutoffs:** (vv),xx,ooo,hhhh,pppp,rrrrr

**Manufacturer:** Watts
**Orientation:** VUH
**0.25% Pb:** No
**Renewed:** 19-Jun-2018

**Model:** 008PCQT
**Meters:**
**Spare Parts Only:** Yes
**Bypass:**

---

**Type:** SVB
**Size:** 1
**Manual:** 9
**Approved:** 19-Jun-2000
**Shutoffs:** (vv),xx,ooo,hhhh,pppp,rrrrr

**Manufacturer:** Watts
**Orientation:** VUH
**0.25% Pb:** No
**Renewed:** 19-Jun-2018

**Model:** 008PCQT
**Meters:**
**Spare Parts Only:** Yes
**Bypass:**

---

**Type:** SVB
**Size:** 3/8
**Manual:** 9
**Approved:** 13-Mar-2015
**Shutoffs:** (vv),xx,ooo,hhhh,pppp

**Manufacturer:** Watts
**Orientation:** VUH
**0.25% Pb:** Yes
**Renewed:** 13-Mar-2018

**Model:** LF008PCQT
**Meters:**
**Spare Parts Only:** No
**Bypass:**

---

**Type:** SVB
**Size:** 1/2
**Manual:** 9
**Approved:** 13-Mar-2015
**Shutoffs:** (vv),xx,ooo,hhhh,pppp,rrrrr

**Manufacturer:** Watts
**Orientation:** VUH
**0.25% Pb:** Yes
**Renewed:** 13-Mar-2018

**Model:** LF008PCQT
**Meters:**
**Spare Parts Only:** No
**Bypass:**

---

**Type:** SVB
**Size:** 3/4
**Manual:** 9
**Approved:** 13-Mar-2015
**Shutoffs:** (vv),xx,ooo,hhhh,pppp,rrrrr

**Manufacturer:** Watts
**Orientation:** VUH
**0.25% Pb:** Yes
**Renewed:** 13-Mar-2018

**Model:** LF008PCQT
**Meters:**
**Spare Parts Only:** No
**Bypass:**

**Type:** SVB
**Manufacturer:** Watts
**Model:** LF008PCQT
**Size:** 1
**Orientation:** VUH
**Meters:**
**Manual:** 9
**0.25% Pb:** Yes
**Spare Parts Only:** No
**Approved:** 13-Mar-2015
**Renewed:** 13-Mar-2018
**Bypass:**
**Shutoffs:** (vv),xx,ooo,hhhh,pppp,rrrrr

---

**Type:** SVB
**Manufacturer:** Wilkins
**Model:** 460
**Size:** 3/8
**Orientation:** VUH
**Meters:**
**Manual:** 9
**0.25% Pb:** No
**Spare Parts Only:** No
**Approved:** 09-Mar-2007
**Renewed:** 09-Mar-2016
**Bypass:**
**Shutoffs:** (ooo),ii

---

**Type:** SVB
**Manufacturer:** Wilkins
**Model:** 460
**Size:** 1/2
**Orientation:** VUH
**Meters:**
**Manual:** 9
**0.25% Pb:** No
**Spare Parts Only:** No
**Approved:** 09-Mar-2007
**Renewed:** 09-Mar-2016
**Bypass:**
**Shutoffs:** (ooo),ii

---

**Type:** SVB
**Manufacturer:** Wilkins
**Model:** 460
**Size:** 3/4
**Orientation:** VUH
**Meters:**
**Manual:** 9
**0.25% Pb:** No
**Spare Parts Only:** No
**Approved:** 08-May-2008
**Renewed:** 08-May-2017
**Bypass:**
**Shutoffs:** (ooo),ii

---

**Type:** SVB
**Manufacturer:** Wilkins
**Model:** 460
**Size:** 1
**Orientation:** VUH
**Meters:**
**Manual:** 9
**0.25% Pb:** No
**Spare Parts Only:** No
**Approved:** 08-May-2008
**Renewed:** 02-May-2017
**Bypass:**
**Shutoffs:** (ooo),ii

---

**Type:** SVB
**Manufacturer:** Wilkins
**Model:** 460XL
**Size:** 3/8
**Orientation:** VUH
**Meters:**
**Manual:** 9
**0.25% Pb:** Yes
**Spare Parts Only:** No
**Approved:** 21-Mar-2011
**Renewed:** 21-Mar-2017
**Bypass:**
**Shutoffs:** (iiii)
**Notes:** Testcocks: Female Threaded End or 45 degree male SAE flare


2018 © University of Southern California

**Type:** SVB
**Manufacturer:** Wilkins
**Model:** 460XL
**Size:** 1/2
**Orientation:** VUH
**Meters:**
**Manual:** 9
**0.25% Pb:** Yes
**Spare Parts Only:** No
**Approved:** 21-Mar-2011
**Renewed:** 21-Mar-2017
**Bypass:**
**Shutoffs:** (iiii)
**Notes:** Testcocks: Female Threaded End or 45 degree male SAE flare

---

**Type:** SVB
**Manufacturer:** Wilkins
**Model:** 460XL
**Size:** 3/4
**Orientation:** VUH
**Meters:**
**Manual:** 9
**0.25% Pb:** Yes
**Spare Parts Only:** No
**Approved:** 21-Mar-2011
**Renewed:** 21-Mar-2017
**Bypass:**
**Shutoffs:** (iiii)
**Notes:** Testcocks: Female Threaded End or 45 degree male SAE flare

---

**Type:** SVB
**Manufacturer:** Wilkins
**Model:** 460XL
**Size:** 1
**Orientation:** VUH
**Meters:**
**Manual:** 9
**0.25% Pb:** Yes
**Spare Parts Only:** No
**Approved:** 21-Mar-2011
**Renewed:** 21-Mar-2017
**Bypass:**
**Shutoffs:** (iiii)
**Notes:** Testcocks: Female Threaded End or 45 degree male SAE flare

# Manufacturers of Approved Backflow Prevention Assemblies

Ames Fire & Waterworks - A Watts Water Technologies Company
http://www.amesfirewater.com/
1485 Tanforan Ave
Woodland, CA 95776
(530) 666-5320

Apollo/Conbraco Industries, Inc.
http://www.apollovalves.com/
P. O. Box 247
Matthews, NC 28105
(704) 847-9191

A.R.I. FLOW CONTROL ACCESSORIES
http://www.arivalves.com
Kibbutz Kfar Charuv
M.P. South Golan
ISRAEL, 12932
972-4-6761800 or 972-4-6761988

Backflow Direct
www.backflowdirect.com
2484 Mercantile Dr
Rancho Cordova, CA 95742
(916) 760-4524

Cla-Val Company
http://www.cla-val.com/
P. O. Box 1325
Newport Beach, CA 92659-0325
(949) 722-4800

FEBCO - A Watts Water Technologies Company
http://www.febcoonline.com
P. O. Box 8070
Fresno, CA 93747
(559) 252-0791

Watts - A Watts Water Technologies Company
http://www.wattsreg.com/
815 Chestnut Street
North Andover, MA 01845
(978) 688-1811

Wilkins Regulator Company
http://www.zurn.com/products/water-safety/backflow-prevention
1747 Commerce Way
Paso Robles, CA 93446
(800) 817-8177


2018 © University of Southern California