CITY OF EVERETT

Design and Construction
Standards and Specifications for Development

Approved by:

Dave H. Davis, P.E. Public Works Director

Ryan L. Sass, P.E. City Engineer

City Officials:

Mayor Ray Stephanson

Council Members

Cassie Franklin (Position 4)
Paul Roberts(Position 1)
Scott Bader (Position 5)
Jeff Moore (Position 2)
Brenda Stonecipher (Position 6)
Scott Murphy (Position 3)
Judy Tuohy (Position 7)

Distributed By:

Public Works Department
3200 Cedar Street
Everett, WA 98201

FOREWARD

The Design and Construction Standards and Specifications for Development are prepared by the Public Works Department of the City of Everett in accordance with Ordinance 898-82. This document is intended to be used in conjunction with the current WSDOT Standard Specifications for Road, Bridge and Municipal Construction and current city policies and procedures.

This edition and updates apply whenever any public or private work is performed within the street rights of way or public easements of the City of Everett including work performed by private parties at their own expense under authority granted by ordinance of the City Council or permit process of the Public Works Department.

A document such as this is constantly being updated due to new technology, environmental considerations, federal and state regulatory requirements, changes in policy or procedures and methods of design and construction. Updates to this manual will be posted to the City web page (www.everettwa.org) as they are approved and the version posted on the City Web Site shall be considered the most current for Public Works and private development.

Paper copies of this document may be obtained at the address below for $25.00 per copy.

City of Everett
Public Works Department
3200 Cedar Street
Everett, Washington 98201
(425) 257-8800

Sincerely,

Ryan L. Sass, P.E.
City Engineer

Design and Construction Standards & Specifications For Development

Volume I

Specifications

Volume II

Standard Drawings

Prepared by:
City of Everett Washington
Public Works Department

July 2016

Design and Construction Standards & Specifications For Development

Volume I

Design & Construction Specifications

SECTION 1 - GENERAL CONSIDERATIONS
SECTION 2 - SMALL PARCEL EROSION AND SEDIMENT C
SECTION 3 - STREETS AND RELATED WORK ONTROL
SECTION 3 -STREETS AND RELATED WORK
SECTION 4 - STORM AND SURFACE WATER
SECTION 5 - WATER DISTRIBUTION
SECTION 6 - SANITARY SEWERS

Prepared by:
City of Everett Washington
Public Works Department

July 2016

TABLE OF CONTENTS

SECTION 1 - GENERAL CONSIDERATIONS

SECTION	DESCRIPTION	PAGE
1-1	STANDARDS	1-1
1-2	REFERENCES	1-1
1-3	AS-BUILT DRAWINGS	1-2
1-4	CITY PERFORMED WORK	1-2
1-5	CONTROL OF NOISE	1-2
1-6	GUARANTEES	1-3
1-6.1	Performance	1-3
1-6.2	Warranty	1-3
1-7	PERMITS	1-4
1-8	LEGAL RELATIONS	1-4
1-9	MODIFICATIONS OF STANDARDS	1-4
1-10	PLAN REVIEW	1-4
1-10.1	Format and Required Data	1-5
1-10.2	Required Drawings	1-6
1-10.3	Scale of Drawings	1-6
1-10.4	Size of Drawings	1-6
1-11	PROTECTION OF PROPERTY AND UTILITIES	1-7
1-11.1	Property	1-7
1-11.2	Utilities	1-7
1-12	SITE MAINTENANCE	1-7
1-13	TRAFFIC CONTROL	1-7
1-13.1	General	1-7
1-13.2	Detours and Road Closures	1-8
1-13.3	Flagger(s), Barricades and Signs	1-8
1-13.4	Placement of Construction Signs on Sidewalks and Pedestrian Pathways	1-9
1-14	CONTROL AND INSPECTION	1-9
1-14.1	General	1-9
1-14.2	Materials, Sampling and Testing	1-9
1-14.2(1)	Developments	1-9
1-14.2(2)	City Forces and City Contractors	1-9
1-14.2(3)	Notification of Inspection	1-9
1-15	ASBESTOS CONTROL	1-10
1-16	LANDSCAPING	1-10

SECTION 2 - SMALL PARCEL EROSION AND SEDIMENT CONTROL

SECTION	DESCRIPTION	PAGE
2-1	GENERAL	2-1
2-2	SMALL PARCEL EROSION AND SEDIMENT CONTROL	2-1
2-2.1	Small Parcel Erosion and Sediment Control Plans (SPESCP)	2-1
2-2.2	Small Parcel BMPs	2-2
2-2.2(1)	BMP ES.10 Planned Clearing and Grading	2-2
2-2.2(2)	BMP ES.20 Excavated Basement Soil	2-2
2-2.2(3)	BMP ES.30 Backfilling	2-2
2-2.2(4)	BMP ES.40 Removal of Excess Soil	2-2
2-2.2(5)	BMP ES.50 Management of Soil Banks	2-2
2-2.2(6)	BMP ES.60 Construction Road Access	2-3
2-2.2(7)	BMP ES.70 Soil Stabilization	2-3
2-2.2(8)	BMP ES.80 Street Cleaning	2-3

SECTION 3 - STREETS AND RELATED WORK

SECTION	DESCRIPTION	PAGE
3-1	GENERAL REQUIREMENTS	3-1
3-2	ROADWAY TYPES AND GEOMETRICS	3-1
3-2.1	General	3-1
3-2.2	Horizontal Alignment	3-1
3-2.2(1)	Curb Return Radii	3-1
3-2.2(2)	Local Streets	3-1
3-2.2(3)	Other Streets	3-1
3-2.2(4)	Trucks and Buses	3-2
3-2.3	Intersections	3-2
3-2.4	Street Ends	3-2
3-3	EASEMENTS	3-2
3-4	FIRE DEPARTMENT ACCESS	3-2
3-5	PARKING LOTS	3-3
3-5.1	General	3-3
3-5.2	Construction	3-3
3-5.3	Handicap Requirements	3-4
3-5.4	Illumination	3-4
3-5.5	Pedestrian Concerns	3-4
3-6	THROAT LENGTH REQUIREMENTS	3-5
3-7	TRAFFIC CONTROL SIGNING AND STRIPING	3.5
3-8	TRAFFIC STUDIES	3-6
3-9	UNDERGROUND UTILITIES	3-7
3-9.1	General	3-7
3-9.2	Trench Excavation	3-8
3-9.3	Trench Backfill	3-8
3-9.4	Compaction	3-9
3-9.5	Trenching Longitudinal to Roadway	3-9
3-9.6	Trenching Transverse to Roadway	3-9
3-9.7	Jacking, Auguring or Tunneling	3-9
3-10	SURVEYING AND MONUMENTATION	3-10
3-10.1	Descriptions	3-10
3-10.2	Materials	3-10
3-10.3	Construction Requirements	3-10
3-11	STREET ILLUMINATION	3-11
3-12	GUARDRAIL	3-11

SECTION 3 -STREETS AND RELATED WORK

SECTION	DESCRIPTION	PAGE
3-13	MAILBOXES	3-11
3-14	PAVEMENT PATCHING	3-12
3-14.1	Description	3-12
3-14.2	Materials	3-12
3-14.3	Cement Concrete Pavement Resurfaced with Asphalt Concrete	3-12
3-14.4	Asphalt Concrete on Granular Base	3-12
3-14.5	Untreated Roadway Surface	3-13
3-14.6	Temporary Pavement Patching	3-13
3-14.7	Construction Requirements	3-13
3-14.7(1)	General	3-13
3-14.7(2)	Cement Concrete Pavement	3-14
3-15	ROCKERIES AND ROCKWALLS	3-14
3-15.1	Description	3-14
3-15.2	Materials	3-14
3-15.3	General	3-15
3-15.4	Construction Requirements	3-15
3-16	METAL HAND RAILINGS	3-16
3-16.1	Description	3-16
3-16.2	Materials	3-16
3-16.3	Fabrication	3-16
3-16.4	Installation	3-17
3-17	CEMENT CONCRETE SIDEWALKS	3-17
3-17.1	Description	3-17
3-17.2	Materials	3-17
3-17.3	Construction Requirements	3-18
3-17.3(1)	General	3-18
3-17.3(2)	Forms and Fine Grading	3-18
3-17.3(3)	Placing and Finishing Concrete	3-18
3-17.3(4)	Curing and Protection	3-19
3-17.3(5)	Curing and Hot Weather	3-19
3-17.3(6)	Cold Weather Work	3-19
3-17.3(7)	Through and Contraction Joints	3-20
3-17.3(8)	Curb Ramps	3-20
3-18	CURB AND GUTTER	3-21
3-18.1	Description	3-21
3-18.2	Materials	3-21
3-18.3	Placing Concrete	3-21
3-18.4	Curing	3-22

SECTION 3 - STREETS AND RELATED WORK

SECTION	DESCRIPTION	PAGE
3-19	CEMENT CONCRETE DRIVEWAYS	3-22
3-19.1	Description	3-22
3-19.2	Materials	3-22
3-19.3	Construction Requirements	3-22
3-19.3(1)	General	3-22
3-19.3(2)	Commercial Driveways	3-23
3-19.3(3)	Residential Driveways	3-24
3-19.3(4)	Intersection Type Criteria	3-24
3-19.3(5)	Excavation and Subgrade	3-24
3-19.3(6)	Forms and Fine Grading	3-24
3-19.3(7)	Placing and Finishing	3-24
3-19.3(8)	Curing and Protection	3-25
3-20	PROPORTIONING OF MATERIALS	3-25
3-20.1	Controlled Density Fill	3-25
3-20.2	Gravel Borrow	3-26
3-20.4	Spawning Gravel	3-26
3-20.5	Crushed Surfacing	3-26
3-20.6	Foundation Material Class A	3-26
3-20.7	Quarry Spalls	3-26
3-20.8	Non-Shrink Aggregate	3-26

SECTION 4 - STORM AND SURFACE WATER

SECTION	DESCRIPTION	PAGE
4-1	GENERAL	4-1
4-2	STORM DRAINAGE CONVEYANCE SYSTEM DESIGN CRITERIA	4-1
4.2.1	Overview	4-1
4-2.2	Design Flow and Route Requirements	4-1
4-2.3	Pipe Systems	4-2
4-2.3(1)	Pipe Materials	4-2
4-2.3(2)	Pipe Sizes, Slopes and Velocities	4-2
4-2.3(3)	Structures	4-3
4-2.3(4)	Pipe Alignment/Connections/Cover	4-3
4-2.3(5)	Frames/LIDS/Grates/Covers	4-4
4-2.3(6)	Restrictor Devices	4-5
4-2.3(7)	Debris Barriers	4-5
4-2.3(8)	Drainage Easements	4-5
4-2.4	CULVERT DESIGN	4-5
4-2.4(1)	Headwater	4-5
4-2.4(2)	Inlet	4-5
4-2.4(3)	Outlets	4-6
4-2.4(4)	Fish Passage	4-6
4-2.5	OUTFALL DESIGN CRITERIA	4-6
4-2.5(1)	General	4-6
4-2.5(2)	Outfall Systems Traversing Steep Slopes	4-6
4-2.6	OPEN CHANNEL DESIGN CRITERIA	4-7
4-2.6(1)	Artificial Channels	4-7
4-2.6(2)	Rock-Lining	4-7
4-2.6(3)	Riprap Filters	4-8
4-2.7	REQUIRED NOTES FOR STORM DRAINAGE PLANS	4-8
Fig. 4-2.1	Median Stone Size Selection for Riprap Design	4-9
Table 4-2.1	Outlet Protection	4-10
Table 4-2.2	Channel Protections	4-11

SECTION 5 - WATER DISTRIBUTION

SECTION	DESCRIPTION	PAGE
5-1	GENERAL	5-1
5-2	CONSTRUCTION PLANS	5-2
5-2.1	Required Notes on Plans	5-3
5-3	BACKFLOW PREVENTION	5-3
5-4	EXISTING UTILITIES	5-4
5-5	FIRE FLOW	5-4
5-6	PIPE AND FITTINGS FOR WATER MAINS	5-4
5-6.1	Description	5-4
5-6.2	Materials	5-4
5-6.3	Joints and Fittings	5-5
5-7	TRENCH EXCAVATION, BEDDING AND BACKFILL FOR WATER MAINS	5-5
5-7.1	Description	5-5
5-7.2	General	5-6
5-7.3	Grade and Alignment	5-6
5-7.4	Trench Excavation	5-6
5-7.4(1)	General	5-6
5-7.4(2)	Trench Widths	5-6
5-7.4(3)	Cribbing and Sheeting-Shoring	5-7
5-7.4(4)	Unsuitable Material	5-7
5-7.4(5)	Bedding the Pipe	5-7
5-7.4(6)	Backfilling Trenches	5-7
5-7.4(7)	Compaction of Backfill	5-8
5-8	CONSTRUCTION REQUIREMENTS	5-8
5-8.1	Dewatering of Trench	5-8
5-8.2	Handling of Pipe	5-8
5-8.3	Cutting Pipe	5-9
5-8.4	Laying Pipe on Curves	5-9
5-8.5	Connections to Existing Mains	5-9
5-8.6	Looped Mains	5-10
5-9	SERVICE LINES	5-10
5-9.1	General	5-10
5-9.2	Materials	5-10
5-9.3	Connections	5-11
5-10	VALVES FOR WATER MAINS	5-11
5-10.1	General	5-11

SECTION 5 - WATER DISTRIBUTION

SECTION	DESCRIPTION	PAGE
5-10.2	Air and Vacuum Release Valves	5-11
5-10.3	Butterfly Valves	5-11
5-10.4	Check Valves	5-11
5-10.5	Gate Valves	5-12
5-10.6	Valve Boxes	5-12
5-10.7	Valve Marker Posts	5-12
5-11	HYDRANTS	5-12
5-11.1	General	5-12
5-11.2	Adapter Requirements	5-12
5-11.3	Cap Requirements	5-13
5-11.4	Hydrant Guard Posts	5-13
5-12	PRESSURE REDUCING STATIONS	5-13
5-13	THRUST RESTRAINT	5-13
5-14	HYDROSTATIC PRESSURE TEST	5-14
5-15	DISINFECTION OF WATER MAINS	5-15
5-15.1	Flushing	5-15
5-15.2	Disinfectant Concentration and Retention Period (Contact Interval)	5-16
5-15.3	Form of Applied Chlorine	5-17
5-15.4	Point of Application	5-17
5-15.5	Preventing Reverse Flow	5-18
5-15.6	Chlorinating Valves, Hydrants, and Appurtenances	5-18
5-15.7	Chlorinating Connections to Existing Water Mains and Water Service Connections	5-18
5-15.8	Final Flushing and Testing	5-18
5-15.9	Sample Collection Taps	5-19
5-15.10	Repetition of Flushing and Testing	5-19
5-16	UNDERGROUND UTILITIES	5-19
5-17	WATER SERVICES FOR FIRE PROTECTION	5-19

SECTION 6 – SANITARY SEWERS

SECTION	DESCRIPTION	PAGE
6-1	GENERAL	6-1
6-2	ALIGNMENT TOLERANCE	6-1
6-3	CONSTRUCTION PLANS	6-1
6-3.1	Required Notes on Plans	6-2
6-4	EASEMENTS	6-2
6-5	LIFT (PUMP) STATIONS	6-2
6-6	MANHOLES	6-3
6-6.1	Description	6-3
6-6.2	Materials	6-3
6-6.3	Construction Requirements	6-3
6-6.3(1)	Bedding	6-3
6-6.3(2)	Joints	6-4
6-6.3(3)	Manhole Channels	6-4
6-6.3(4)	Manhole Pipe Connections	6-4
6-6.3(5)	Ladder	6-4
6-6.3(6)	Connections to Existing Manholes	6-4
6-6.3(7)	Spacing	6-5
6-7	SEWER MAIN	6-5
6-7.1	Materials	6-5
6-7.2	General	6-5
6-7.3	Underground Utilities	6-6
6-7.4	Pipe Bedding	6-6
6-7.5	Laying Sewer Pipe	6-6
6-7.6	Plugs and Connections	6-6
6-7.7	Jointing	6-7
6-7.8	Jacking, Auguring or Tunneling	6-7
6-7.9	Size	6-7
6-7.10	Slope	6-7
6-7.11	Septic Tanks	6-7
6-7.12	Pavement Patching	6-7
6-7.13	Cleaning Testing	6-8
6-8	SIDE SEWERS	6-8
6-8.1	Description	6-8
6-8.2	Materials	6-8
6-8.3	General	6-8
6-8.4	Excavation, Bedding, Backfill and Compaction	6-9
6-8.5	Size	6-9

SECTION 6 - SANITARY SEWERS

SECTION	DESCRIPTION	PAGE
6-8.6	Slope	6-9
6-8.7	Fittings	6-9
6-8.8	Cleanouts	6-9
6-8.9	Testing	6-9
6-9	TELEVISION INSPECTION	6-10

SECTION 1 - GENERAL CONSIDERATIONS

1-1 STANDARDS

These City of Everett Design and Construction Standards and Specifications, hereinafter referred to as the "Standards", shall apply whenever any public or private work is performed within the street rights-of-way in the City of Everett, including work performed by private parties at their own expense under authority granted by ordinance of the City Council permit process. Except where these Standards provide otherwise, design, construction and materials shall conform to the appropriate standards of the current edition of the following publications produced separated by the Washington State Department of Transportation (WSDOT) or jointly by WSDOT and the Washington State Chapter of the American Public Workers Association (APWA).

A. WSDOT/APWA Standard Specifications for Road, Bridge and Municipal Construction, hereinafter referred to as the "WSDOT/APWA Standard Specifications".

B. WSDOT/APWA Standard Plans for Road, Bridge and Municipal Construction, hereinafter referred to as "WSDOT/APWA Standard Plans".

1-2 REFERENCES

These Standards are intended to be consistent with the most currently adopted provisions of the following:

A. Everett Municipal Codes
B. City of Everett Drainage Plan
C. City Stormwater Management Manual
D. State of Washington Shoreline Management Act
E. State and National Environmental Policy Acts
F. City Design Standards – Washington State
G. International Building Code
H. International Residential Code
I. National Electrical Code
J. Uniform Plumbing Code
K. International Mechanical Code
L. AWWA Standards
M. WSDOT Design Manual
N. WSDOT Traffic Manual
O. WSDOT Utilities Manual
P. WSDOT Construction Manual
Q. A Policy on Geometric Design of Highways and Streets (AASHTO)
R. Manual on Uniform Traffic Control Devices (MUTCD)

1-3 AS-BUILT DRAWINGS

Prior to the acceptance of the work, the developer/contractor shall furnish the City Engineer one neatly and legibly marked set of the city approved, wet stamped plotter paper drawings of significant permanent items showing any and all changes in the final locations of all items of work including, but not limited to, curb and gutter, storm drain lines, water lines, sewer lines, catch basins, manholes, fire hydrants, valves, new and existing utilities and all other miscellaneous items included in the work. Marking of the drawings shall represent all changes, vertical and horizontal, and be done at the time the material and equipment is installed.

The city would prefer a computer file of the as-builts submitted in conjunction with the paper copy. The computer file should be capable of being imported to AutoCAD. Please refer to Section 1-10.1 of these Standards for information on plan format.

As-built drawings shall be required whether for private or public construction in accordance with the following:

Private Development

A. Plats – Final plat approval shall be withheld until after the as-builts have been submitted and approved.

B. Commercial – Final approval and installation of water meters will be withheld until the as-builts have been submitted and approved.

Public Construction

As-built drawings shall be considered an item on the contractor's punch list. Until all items on the punch list are completed, the project will not be sent to the City Council for approval. Final acceptance will be withheld until the as-built drawings are submitted and approved.

1-4 CITY PERFORMED WORK

When work is to be performed by the city, the city will provide all the material required for the said work. The cost for the material and the work performed shall be at the developer's expense. Any requests for city work should be scheduled at least one week in advance.

1-5 CONTROL OF NOISE

The city shall establish regulations for control of noise in residentially zoned property. For the purpose of regulating potentially disruptive or annoying noise, Ordinance No. 1556-89 states that all residentially zoned lands fall within Noise Control District No. 1.

Under the City's Noise Ordinance, construction related noise has limitations during the hours before 7 a.m. and after 10 p.m. on weekdays and before 8 a.m. and after 6 p.m. on weekends and state recognized holidays. Due to citizen concerns about construction noise in neighborhoods, and given the city's intent to limit the occurrence of public disturbance noise, construction sites will be monitored and violators are subject to fines.

Construction contractors are responsible for notifying subcontractors of the city's noise regulations.

1-6 GUARANTEES

Performance and warranty guarantees will be required for all public works improvements, unless waived by the City Engineer. Work to be performed by any state agency or unit of local government shall be exempt from providing guarantees based on Chapter 35A.21.250 R.C.W.

Acceptable methods of guarantees will be as follows:

A. Bond
B. Assignment of Funds (Performance)
C. Set-aside Letter (Warranty)
D. Cash Deposit

Standard documents as approved by the city for the above items are available from the Public Works Department.

1-6.1 PERFORMANCE

Performance guarantees will be required for all improvements located in the public rights-of-way and as required by city ordinance as detailed on the approved plans and as noted in the follow summary:

Street/Alley	Drainage (private)	Utilities (public)
Estimated cost plus 20%; construct improvements prior to building permit issuance; for a plat construct all improvements prior to final plat approval.	For properties one acre or more with drainage abatements facilities, estimated cost plus 20%.	Estimated cost plus 20%; construct improvements prior to occupancy; for a plat construct prior to final plat approval.

The initial guarantee and subsequent extensions as approved will be limited to one year increments. If time extensions are approved, the guarantee amount shall be revised to reflect inflation and/or other cost impacts.

The developer shall provide an estimate, prepared by a licensed engineer, of the improvements based on the approved plans. The estimate shall be itemized by description, quantities and costs. The submitted data will be reviewed by public works for adequacy of quantities and comprehensiveness of estimates. The estimate shall be reviewed to reflect the city's cost to complete the improvements.

1-6.2 WARRANTY

Warranty guarantees will be required at the time of final acceptance of the public improvements and/or improvements required by city ordinance. The guarantee amount will be 10% of the documented final cost of the improvements. The warranty guarantee is required prior to release of the performance guarantee. Methods of posting warranty guarantee shall be the same as for performance guarantee and shall be for the lengths of time as listed below:

Street/Alley	Drainage (private)	Utilities (public)
One Year	Two Years (will be extended for 1 year if city elects to assume maintenance.)	One Year

1-7 PERMITS

A public works permit is required for all work within the public right-of-way and city utility easements, and for all sewer, water, and drainage improvements, including fill and excavation, parking lot construction and/or paving on private property.

The approved applicant's copy of the public works permit, together with a set of plans approved by the Public Works Department shall be available on the job site whenever work is being done on any portion of the project.

Any questions regarding information about permits and the approved prices should be directed to the building counter located on the second floor of the Service Center Building at 3200 Cedar Street in Everett.

1-8 LEGAL RELATIONS AND RESPONSIBILITIES

The contractor at all times shall comply with all Federal and State laws, local laws and ordinances, and any regulations which in any manner affect the project.

The contractor shall release, indemnify and promise to defend and save harmless the city, its officers, employees and agents from and against any and all liability, loss, damage, and expense, actions and claims, including costs and reasonable attorneys' fees incurred by the city in defense thereof, asserting or arising directly or indirectly on account of any violation of laws, ordinances or regulations whether such violations are by the contractor, his subcontractors, his employees, or his agents.

1-9 MODIFICATIONS OF STANDARDS

Modifications from these Standards may be granted by the City Engineer upon evidence that such modifications are in the public interest, that they are based upon sound engineering judgment, and that requirements for safety, function, appearance, environment, and maintainability are fully met. Desired modifications must be approved prior to construction.

1-10 PLAN REVIEW

The Public Works Department has established basic standards for improvement plans so plan checking can be processed efficiently. See each section for specific requirements over and above the following standards. Plans must meet these standards before they will be accepted. Requirements for plans will be divided into two general categories.

A. Minor Projects: Work not requiring public right-of-way improvements. For example, small site projects such as a new house or duplex, garage addition, house addition or remodel.

B. Major Projects: Work involving street improvements, drainage, water and sewer improvements. Plan for major projects must be drawn by a registered civil engineer licensed in the State of Washington.

1-10.1 FORMAT AND REQUIRED DATA

A. All public works plans for street improvements and utility systems shall be prepared in a plan/profile format either with sheets printed in half plan and half profile or with separate sheets for plan view and profile views.

B. In addition to paper plan and profile sheets, it is required that all plans for major projects should be submitted with a computer file that can be imported to AutoCAD. Major projects are as defined in Section 1-10 A above or as otherwise identified by the City Engineer. Copies of the city specified format for AutoCAD are available at the building counter located on the second floor of the Public Works Service Center at 3200 Cedar Street, Everett, Washington.

C. Plans shall be prepared with all utilities, both new and existing, shown on all sets of plans. For example, on the sanitary sewer sets, the water and storm drains shall be shown with the sanitary sewer portions being heavily highlighted. Other utilities are also to be shown in profile views where crossings occur.

D. Whenever possible, use notes specifying city standard numbers for common items such as catch basins, restrictors, fire hydrant assemblies, etc.

E. Show the existing channelization of all streets that front the proposed development. Show all curb cuts on both the adjacent properties and the properties across the street that front on the proposed development.

F. Show complete data for curb radii, utility locations (new and existing), curb elevations, street stationing, street widths, existing adjacent improvements, elevations of existing street improvements, and utilities, etc.

G. All elevations and grades on public works plans shall be to the 1988 N.A.V.D. (North American Vertical Datum).

H. A summary of quantities for all work within the public right-of-way or in easements granted to the city shall be listed on the title sheet or on the first sheet of all plans or sets of plans. The following list can be used as a guideline for the items to be listed but is to be supplemented as necessary for a particular project:

1.	Asphalt Concrete Pavement (Roadway)	S.Y.
2.	Cement Concrete Pavement (Roadway)	S.Y.
3.	Asphalt Concrete Pavement (Alley)	S.Y.
4.	Cement Concrete Pavement (Alley)	S.Y.
5.	Cement Concrete Curb & Gutter – Type “A-1”	L.F.
6.	Cement Concrete Sidewalk	S.F.
7.	Cement Concrete Driveway Approaches	S.F.
8.	Ductile Iron Water Main (Size)	L.F.
9.	Gate Valves (Size)	EA.
10.	Butterfly Valves (Size)	EA.
11.	Concrete or PVC Sewer Main (Size)	L.F.
12.	Concrete or PVC Side Sewer (Size)	L.F.
13.	Sewer Manholes (Type)	EA.
14.	Concrete Storm Drain Pipe (Size)	L.F.
15.	Catch Basins (Type)	EA.
16.	Traffic Regulatory Signs (Type)	EA.
17.	Street Name Signs	EA.
18.	Fire Hydrant Assemblies	EA.
19.	Water Main Blow-Offs	EA.

I. A "Driveway Schedule" which lists all of the driveways, both residential and commercial, being constructed and shall include the following information pertaining to each driveway, in tabular form:

   1. Location of driveway
   2. Surface type
   3. Width
   4. Profile grade (may require separate sketch)
   5. Length

J. Plans shall show any environmental features such as wetlands, streams, steep slopes and any associated buffers for each.

1-10.2 REQUIRED DRAWINGS

The following plans for public works improvements and utilities shall be prepared:

A. Erosion Control & Grading Plan
B. Grading Plan
C. Storm Drain or Drainage Plan (Drainage & Street Plans may be combined together).
D. Water System Plan
E. Sanitary Sewer Plan
F. Street Improvements*
G. Landscaping Plan

* A separate cross section plan sheet is required for all new street construction. Distance between stations shall be determined by City Engineer based on site topography.

For many minor projects, some or all the above required sheets may be condensed into one plan sheet. If an extension or either a sewer main, water main, or storm drain main is required, a separate sheet will be required for that work.

1-10.3 SCALE OF DRAWINGS

All plans are to be drawn utilizing an engineer's scale.

The acceptable scale for public works improvement plans shall be 1"=40' or larger for plan view (horizontal) and 1"=5' for profile view (vertical). A larger scale such as 1"=20' for the plan view may be used on smaller projects when greater clarity can be attained.

1-10.4 SIZE OF DRAWINGS

A. Minor Projects: Plans must be drawn or printed on paper that is relatively heavy, such as blueprint quality or standard drafting paper. Plans drawn on tissue paper, poster board or cardboard will not be accepted. The minimum acceptable size is to be 8-1/2"x11", with the maximum acceptable size being 24"x36".

B. Major Projects: Plans must be plotted on 20# bond or other appropriate drafting paper. Plans shall be no less than 22"x34" and no larger than 24"x36".

1-11 PROTECTION OF PROPERTY AND UTILITIES

1-11.1 PROPERTY

The contractor shall protect and preserve from damage, interference and destruction all private and public property on or in the vicinity of the work. If such property is damaged or destroyed or its use interfered with by the contractor or his agents, it shall be restored immediately to its former condition by the contractor at his expense and such interference terminated.

1-11.2 UTILITIES

The contractor shall protect from damage private and public utilities, including telephone and telegraph lines, power lines, sewer and water lines, railroad tracks and appurtenances, highway lighting and signal systems, and similar facilities. Before beginning excavation, the contractor shall provide notice of commencement to all owners of underground facilities through the one number locator service, phone number 1-800-424-5555, if available; if not he shall give notice to all individual utility owners. Such notice shall not be less than 2 nor more than 10 business days before the scheduled date of excavation.

1-12 SITE MAINTENANCE

The developer and contractor shall schedule and control his work so as to prevent all hazards to public safety, health and welfare.

Streets shall be kept free of dirt and debris on a continuous basis.

Pedestrian facilities shall be kept free of obstruction, and an accessible route shall be maintained at all times.

On existing street, two way traffic shall be maintained at all times unless detour plans have been approved in advance by the City Traffic Engineer.

Pedestrian and vehicular access to occupied buildings shall be maintained at all times except where approval from the building owner has been obtained.

Adherence to the project's erosion and sediment control plan will be required. Features contained therein, such as silt fences, check dams and sedimentation ponds shall be maintained in good working order to the satisfaction of the public works inspector.

1-13 TRAFFIC CONTROL

1-13.1 GENERAL

Traffic control for all projects shall comply with Chapter 6 of MUTCD. The contractor shall be responsible to furnish and maintain all required labor and materials as needed to the satisfaction of the City Engineer.

The contractor shall conduct his operations as to offer the least possible obstruction and inconvenience to the public, and he shall have under construction no greater length or amount of work than he can prosecute properly with regard to the rights of the public. He shall not open up sections of the work and leave them unfinished, but he shall finish the work as he goes insofar as practicable.

Unless otherwise approved in writing by the City Engineer, all public traffic shall be permitted to pass through the work with as little inconvenience and delay as possible. The contractor shall keep existing roads and streets adjacent to or within the limits of the project open to and maintained in a good and safe condition for traffic at all times. The contractor shall remove any deposits or debris and shall repair any damage resulting from his operations. Construction shall be conducted so as to cause as little inconvenience as possible to abutting property owners. Convenient access to driveways, houses and buildings along the line of work shall be maintained.

Construction signs shall not be placed on sidewalks or pedestrian pathways impeding wheelchair or pedestrian traffic. If the work entails removing panels of sidewalk, then place sidewalk closed signs in advance of the work area and provide accessible pedestrian detour route. This will allow the handicapped and pedestrians to utilize an alternate route.

If the road construction activities require advanced warning signs, then signs will be placed in accordance with the MUTCD manual and WORK ZONE TRAFFIC CONTROL book.

Signs and traffic control devices should not be a hazard to pedestrians. Signs located near or adjacent to sidewalk should have a 7-foot clearance. In the event that sidewalks on both sides of the project are closed, then pedestrians should be guided around the construction site.

If your signing crews are in doubt, have them contact the appropriate City of Everett Inspectors.

1-13.2 DETOURS AND ROAD CLOSURES

Approval must be received from the city traffic engineer for all detours and road closures. A formal traffic control plan complying with the MUTCD shall be submitted to public works for review and approval by the traffic engineer prior to any work proceeding.

1-13.3 FLAGGERS, BARRICADES AND SIGNS

Flagger(s), barricades, signs shall conform to the Standards established in the latest edition of the "Manual on Uniform Traffic Control Devices" (MUTCD). Standard Plan No's 701A through 701L show typical traffic control conditions. Standard Plan No. 702 shows typical traffic control devices. Should the contractor deviate from these Standard Plans, he or she should prepare a signing plan showing the necessary construction signing, barricades and flagger(s) required for the project and submit the plan(s) to the public works for approval by the City Engineer in advance of the time the signing and barricades will be required. All equipment and materials required for traffic control shall be furnished, installed and maintained by the contractor to the satisfaction of the City Engineer.

During construction activity at signalized locations, an off-duty, uniformed police officer shall be required at all times the signal or beacon is turned off or when the traffic signal indicator is countermanded, or if the engineer determines it is necessary for traffic control. Officers are also required for new traffic signal work.

The uniformed police officer shall be provided by the contractor. For information on police officer availability, call the City of Everett Police Department at 259-0400.

1-13.4 PLACEMENT OF CONSTRUCTION SIGNS ON SIDEWALKS AND PEDESTRIAN PATHWAYS

Construction signs shall not be placed on sidewalks or pedestrian pathways impeding wheelchair or pedestrian traffic. If the work entails removing panels or sidewalk, then place sidewalk closed signs in advance of the work area and provide an alternate accessible route. This will allow the handicapped and pedestrians to utilize an alternate route.

If the road construction activities require advanced warning signs, then signs will be placed in accordance with the MUTCD manual and WORK ZONE TRAFFIC CONTROL book.

Signs and traffic control devices should not be a hazard to pedestrians. Signs located near or adjacent to sidewalk should have a 7-foot clearance. In the event that sidewalks on both sides of the project are closed, then pedestrians should be guided around the construction site.

If your signing crews are in doubt, have them contact the appropriate City of Everett inspectors.

1-14 CONTROL AND INSPECTION

1-14-.1 GENERAL

Work performed in construction or improvements within the city, whether by a private developer, a city contractor or city forces, shall be done in accordance with the approved plans and specifications and to the satisfaction of the City Engineer.

No work may be started until such plans are approved. Any revision to such plans shall be approved by the City Engineer prior to performance of the work.

The City Engineer will have authority to enforce these Standards as well as other referenced or pertinent specifications and will appoint project engineers, assistances and inspectors as necessary to inspect the work for compliance.

1-14.2 MATERIALS SAMPLING & TESTING

1-14.2(1) DEVELOPMENTS

It shall be the responsibility of the developer to provide test reports certified by a professional engineer licensed in the State of Washington to verify compliance of materials used in the project. Sampling and/or testing shall be at a frequency and magnitude determined by the City Engineer or designated representative. Copies of all test reports shall be furnished to the City Engineer. All costs incurred for testing or sampling, as required, shall be the responsibility of the developer.

1-14.2(2) CITY FORCES & CITY CONTRACTORS

Construction work performed by city forces and city contractors shall be inspected by city inspectors. Sampling and testing shall be performed by city inspectors or by a professional laboratory.

1-14.2(3) NOTIFICATION OF INSPECTION

The developer shall notify the city of inspection needs in a timely manner. In general, a minimum of 24 hours advance notice will be required. Failure to notify in time may oblige the city to arrange appropriate

sampling and testing after-the-fact, with certification by a qualified private testing laboratory. Costs of such testing and certification shall be borne by the developer.

1-15 ASBESTOS CONTROL

Asbestos containing material (ACM) may be encountered during a construction project in the form of asbestos cement pipe, pipe insulation, or as insulation in a structure that is being demolished. It can be found in pipe for water and sewer mains, electrical conduits, drainage pipe, and vent pipes, etc. Normal breakage and crushing of the material can cause an asbestos fiber release which presents a serious respiratory hazard. It is imperative that asbestos fiber release be controlled. Citations, by regulatory agencies, for an asbestos fiber release carry substantial fines.

Only employees certified by the State of Washington as a Certified Asbestos Worker may work on ACM during construction, demolition, repair, maintenance, renovation, salvage, or disposal of ACM.

The contractor shall have all asbestos removed from the site and property disposed of by a State licensed asbestos contractor in accordance with the practices specified by the State of Washington Department of Ecology, the Snohomish County Solid Waste Division and all other pertinent State and Federal Regulations. See WAC 296-62-077.

1-16 LANDSCAPING

The development of landscaping and erosion control is to conform to the basic concepts and principles set forth in the City of Everett Zoning Code. Landscaping shall be required on all projects to provide visual orientation for traffic safety; to create physical delineation of parking areas and to furnish definition and scale of the entire complex by interval plantings and to insure the preservation of land values by creating an environmental quality which complements the objectives of the respective land uses in any zone. A copy of the Zoning Code is available for review at the building counter, second floor of the Service Center located at 3200 Cedar Street in Everett.

SECTION 2 - SMALL PARCEL EROSION AND SEDIMENT CONTROL

2-1 GENERAL

This section of the Standards covers erosion and sediment control for small parcels, where land alteration activities will disturb less than one acre of land. Projects which will disturb one acre of land or more must refer to the City of Everett's Stormwater Management Manual for large parcel erosion and sediment control requirements.

Land alteration activities are those activities which are commonly referred to as clearing (the act of vegetation removal from the land surface, often referred to as land clearing); grubbing (the act of root vegetation removal from beneath the surface of the earth, usually in conjunction with clearing); excavation (the mechanical removal of earth material); filling (deposition of earth material placed by artificial means); grading (excavation of filling or combination thereof); and stockpiling (temporary deposition of earth material placed by artificial means).

2-2 SMALL PARCEL EROSION AND SEDIMENT CONTROL

2-2.1. SMALL PARCEL EROSION AND SEDIMENT CONTROL PLANS (SPESCP)

A SPESCP illustrates the Best Management Practices (BMPs) and strategies for controlling erosion and sediment on a small parcel during construction. The applicant developing a small parcel shall submit two copies of a site improvement and drainage plan on 8 ½" by 11" paper showing the following:

- Name, address, and phone number of owner or contact person.
- North arrow, lot number and plat, address, date, and street name fronting structure.
- Footprint of all proposed structures and any existing structures on the site.
- Location of any environmentally sensitive areas (as identified in the City of Everett Zoning Code) on or immediately adjacent to the site, including streams, wetlands, steep slopes, and their required buffers.
- Arrows or topographical contours showing the slope of the site.
- Methods to convey runoff away from the proposed structures and construction activity.
- Proposed location and erosion protection of excavated basement soil stockpiles (if applicable).
- Methods to stabilize disturbed areas of the site and to protect adjacent properties and/or streets from sediment (these methods may include plastic covering, mulching, seeding, planting, sodding, vegetative buffer strips, sediment barriers or filter fences, and dikes).
- A construction vehicle access (limited to one route, whenever possible) using gravel or crushed rock applied to the driveway area, with truck traffic restricted to this one route.
- A note calling for periodic street cleaning to remove any sediment tracked off the site
- A note calling for routine inspection and maintenance of all installed erosion and sediment control BMPs, especially after storms.
- A note calling for appropriate measures to be taken to stop sediments from entering waterways if the proposed BMPs fail.
- Call out the number of square feet of rooftops and the number of square feet of other impervious surfaces such as driveways and parking areas.

- Show connection to nearest stream, if possible, or state distance to stream.
- A note indicating that bare and/or disturbed soils shall remain uncovered and/or unstabilized for no more than 2 days from October 1 through April 30, and for no more than 7 days from May 1 through September 30.

2-2.2 SMALL PARCEL BMPs

2-2.2(1) BMP ES.10 PLANNED CLEARING AND GRADING

Clearing and grading of the site should be planned properly. It is important to clear only the areas needed, thus keeping exposed areas to a minimum. Clearing should be phased so that only those areas that are actively being worked are uncovered. Clearing limits should be flagged and reviewed by the appropriate city official in the lot or area prior to the initiation of clearing.

2-2.2(2) BMP ES.20 EXCAVATED BASEMENT SOIL

Excavated basement soil should be located a reasonable distance behind the curb, such as in the backyard or side yard area. This practice will increase the distance eroded soil must travel to reach the storm sewer system. Soil piles should be covered until the soil is either used or removed. Piles should be situated so that sediment does not erode into the street, adjoining yards and does not enter surface water.

2-2.2(3) BMP ES.30 BACKFILLING

Basement walls should be backfilled as soon as possible and the lot rough graded. This practice will eliminate large soil mounds which are highly erodible and prepares the lot for temporary cover, which will further reduce erosion potential.

2-2.2(4) BMP ES.40 REMOVAL OF EXCESS SOIL

Excess soil should be removed from the site as soon as possible after backfilling. This practice will eliminate any sediment loss from surplus fill.

2-2.2(5) BMP ES.50 MANAGEMENT OF SOIL BANKS

If a lot has a soil bank higher than the curb, the bank should be located several feet behind the curb and a shallow trench should be excavated between the bank and the curb. This practice will help prevent any eroded sediment from entering the street.

2-2.2(6)BMP ES.60 CONSTRUCTION ROAD ACCESS

Gravel or crushed rock shall be applied to the driveway area and vehicle traffic restricted to this one route. Driveway paving can be installed directly over the gravel. This measure will help prevent soil from adhering to tires and stop soil from washing into the street. This construction access requires periodic inspection and maintenance including washing, top-dressing with additional stone, reworking and compaction.

2-2.2(7) BMP ES.70 SOIL STABILIZATION

Soil stabilization measures protect soil from the erosive forces of raindrop impact and flowing water. Acceptable measures include establishing vegetation by sodding or seeding, mulching with two tons of straw per acre or approved equal, plastic or other impervious covering staked to the ground or anchored with rocks or sandbags, and the early application of gravel base on areas to be paved.

2-2.2(8) BMP ES.80 STREET CLEANING

Periodic street cleaning shall be provided to remove any sediment that may have been tracked out. Sediment should be removed by shoveling or sweeping and carefully removed to a suitable disposal area where it will not be re-eroded. Additional street cleaning may be required as directed by the city public works inspector. Special care should be taken to reduce sediments from entering storm drains connected to salmon streams. The use of vacuum sweepers is encouraged.

Additional street cleaning may be required as directed by the City Public Works inspector. Special care should be taken to reduce sediments from entering storm drain connected to salmon streams. The use of vacuum sweepers are encouraged.

SECTION 3 - STREETS AND RELATED WORK

3-1 GENERAL REQUIREMENTS

All work performed in the design, preparation of plans and in the construction or improvement of city streets and all appurtenances, whether public or private shall be the responsibility of the developer or contractor and done to the satisfaction of the City Engineer and in accordance with the plans and specifications approved by the city for the work.

It is emphasized that no permits will be issued to start work until plans for that work are approved. Any revisions to the plans shall be approved by the City Engineer before being implemented. A set of "as-built" drawings (Mylars) will be required at the completion of the project and prior to final acceptance of the work. See individual utility sections for more specific "as-built" requirements.

City Ordinances and Standards establish policy for the installation of street improvements. Specific application will be determined at the time of permit application and/or issuance.

3-2 ROADWAY TYPES AND GEOMETRICS

3-2.1 GENERAL

City of Everett roadways are classified functionally as indicated in Standard Plan No. 300. Criteria for minimum right-of-way and roadway widths and other geometrics shall be as listed for given classifications.

Structural sections and roadway appurtenances shall be as shown on Standard Plan Nos. 301 and 302.

The City Engineer may require the second lift asphalt to be bonded and delayed for up to one year.

Typical utility locations for design purposes are shown on Standard Plan No. 322.

3-2.2 HORIZONTAL ALIGNMENT

3-2.2(1) CURB RETURN RADII

For the intersection of two local streets, the minimum allowable curb radius shall be 25 feet, which is to be measured from the radius point to the face of curb.

For the intersection of a local street with any collector or arterial, the minimum radius shall be 30 feet.

3-2.2 (2) LOCAL STREETS

For the intersection of two local streets, the minimum allowable curb radius shall be 25 feet, which is to be measured from the radius point to the face of curb.

For the intersection of a local street with any collector or arterial, the minimum radius shall be 30 feet.

3-2.2(3) OTHER STREETS

On all other street intersections, the minimum allowable radii shall be 30 feet.

3-2.2(4) TRUCKS AND BUSES

Radii of 40 feet or more should be provided where large truck combinations and buses turn frequently. Larger radii are also desirable where speed reductions would cause problems.

3-2.3 INTERSECTIONS

Angle of Intersection	80° to 90°
Minimum Centerline Radius	N/A
Minimum Curb Radius	25 feet

3-2.4 STREET ENDS

Cul-de-sacs shall be provided at all permanent street ends, and on any temporary dead end location when the length of the street is more than 150 feet in length. Cul-de-sacs shall be per Standard Plan No. 304.

On temporary dead ends, when the street is less than 200 feet in length, the required turnaround area may be a hammerhead type of design per Standard Plan No. 323.

3-3 EASEMENTS

A nonexclusive easement shall be reserved for and granted to all utilities serving subject plat and their respective successors and assigns, over, under and upon the exterior 10 feet parallel with adjoining the street frontage of all lots and common areas in which to install, lay, construct, renew, operate and maintain underground conduits, cables, pipes, and wires; together with other necessary facilities and equipment, for the purpose of serving this subdivision and other property with utility service, together with the right to enter upon the lots at all times for the purposes herein stated.

3-4 FIRE DEPARTMENT ACCESS

As required by the fire chief, every building constructed shall be accessible to the Fire Department, both during and after construction, by way of access roadways approved by the Fire Department. The roadway shall have at least 20 feet of unobstructed width, shall have adequate roadway turning radius, and be capable of supporting the imposed loads of fire apparatus. The minimum allowable vertical clearance shall be 13 feet 6 inches. All required fire access roads must be in service prior to commencement of construction.

When access roads cannot be installed due to topography, waterways, nonnegotiable grades or other similar conditions, the chief is authorized to require additional fire protection as specified in Section 10.501(b) of the Uniform Fire Code. Such devices or appliances may consist of automatic fire alarm systems, automatic sprinkler or water spray systems, standpipe and hose, fixed or portable fire extinguishers, suitable fire blankets, breathing apparatus, manual or automatic covers, carbon dioxide, foam, halogenated or dry chemical or other special fire-extinguishing systems. Where such systems are provided, they shall be designed and installed in accordance with the applicable Uniform Fire Code Standards.

The following definitions shall apply:

A. **Fire Lane:** That portion of the Fire Department access to areas or structures which is required by the provisions of Chapter 46.44 of the Everett Municipal Code. Generally, this access is in larger complexes and constitute continuous loops around buildings or complexes.

B. **Fire Access Road:** That portion of the Fire Department access to areas or structures which is required by the provisions of Section 10.207 of the Uniform Fire Code, 1991 edition or subsequent revision. This type of access may be provided to almost any type of property.

C. **Access Easement:** That portion of a "fire access road" as defined above which is provided by the granting of a permanent easement over one or more properties in order to provide permanent access to other projects.

D. **Short Plat Access:** That portion of Fire Department access into short plats regulated by Title 18 of the Everett Municipal Code.

Temporary access roads in use during building construction shall be constructed for all weather driving conditions. At no time during the construction of the project should the roadway surface consist primarily of dirt, mud, sand, or other material that, in the opinion of the Fire Chief, may impair fire fighting or rescue operations. The required 20 foot width must be maintained so that the driving surface is recognizable day or night.

The required width of any fire apparatus access road shall not be obstructed in any manner, including parking of vehicles. Minimum required widths and clearances established under this section shall be maintained at all times. The required cul-de-sac turnaround for fire apparatus shall be per Standard Drawing No. 304.

3-5 PARKING LOTS

3-5.1 GENERAL

Off street parking lots shall be constructed in conformance with the requirements for number of stalls and landscaping as noted in the Zoning Code. Additionally, if all of the following are met, a maximum of 15% of the required number of stalls may be sized for compact cars, as shown on Standard Plan Nos. 334A and 334B. Aisle widths may be required to be widened if multiple utility lines are located within the aisle corridor.

A. The parking lot contains 20 or more parking spaces.

B. The parking area is defined as long term parking, i.e., more than 3-4 hours and does not involve packages. For example, a shopping center could not meet this criterion, but an apartment complex could.

C. The compact stalls are located together and are not intermixed with the standard parking stalls.

3-5.2 CONSTRUCTION

All parking lot construction shall be inspected by the Public Works Department for conformance to plans for size, layout, drainage control and structural section. The minimum acceptable structural section for parking lots shall be 2 inches compacted depth HMA Class ½" PG 64-22 asphalt pavement placed over 4 inches of Crushed Surfacing Base Course, unless otherwise approved by the City Engineer. Prior to placing any surfacing material on the roadway, it will be the responsibility of the developer/contractor to provide density test reports certified by a professional engineer registered in the State of Washington.

Crushed Surfacing Base Course shall be compacted to 95% maximum density. Density testing for asphalt pavement including the necessity and frequency of core samples will be determined by the engineer on a case by case basis.

3-5.3 HANDICAP REQUIREMENTS

Handicap parking stalls shall meet the requirements of Washington State Regulations for Barrier Free Facilities (WAC 51-30) and the Americans with Disabilities Act (ADA) as applicable.

Safe, convenient handicap access is required from the street to all buildings on site. This is in addition to safe, convenient handicap access between buildings. See Section 3-5.5.

3-5.4 ILLUMINATION

Parking lot illumination shall be provided for all parking lots containing more than ten (10) parking spaces, and shall be designed and constructed so as to:

A. Provide security lighting to all parking spaces.

B. Provide using full-cutoff luminaires to minimize off site lighting impacts.

C. Minimize illumination of salmonid bearing streams to minimize potential predation.

3-5.5 PEDESTRIAN CONCERNS

Pedestrian walkways may be required within commercial parking lots as determined by city traffic engineer.

Internal vehicle and pedestrian circulation for parking lots shall be approved by the planning director and traffic engineer. Parking lot circulation shall allow for access so pedestrians and wheelchairs can easily gain access from public sidewalks and bus stops to building entrances through the use of pedestrian paths which are physically separated from vehicle traffic and maneuvering areas. In shopping center parking lots containing more than 100 spaces, such pedestrian/wheelchair paths shall be a minimum of 5 feet wide and constructed in a manner that they cannot be used as a holding area for shopping carts.

Access driveways for parking areas shall be located so as to cause the least possible conflict with vehicular and pedestrian traffic on public rights-of-way.

The traffic engineer may require joint use of driveways by more than one property.

3-6 THROAT LENGTH REQUIREMENTS

The throat length is the unobstructed storage length requirement measured from the inside face of curb to the first driveway or parking stall. Distances may be reduced for multiple driveways as approved by the City Engineer. Minimum throat lengths for each particular land use are as shown on the following table:

MINIMUM THROAT LENGTHS

Land Use	Size		Min Throat Length Collector (ft)	Min Throat Length Arterial (ft)
Light Industrial	<	100,000 sq. ft	25	50
		100,001-500,000 sq. ft	50	100
	>	500,000 sq. ft.	50	200
Discount Store	<	30,000 sq. ft.	25	50
	>	30,000 sq. ft.	25	75
Shopping Center	<	250,000 sq. ft.	25	50
		250,001-500,000 sq. ft.	50	75
		500,001-750,000 sq. ft.	75	200
	>	750,000 sq.ft.	125	250
Supermarket	<	20,000 sq. ft.	50	75
	>	20,000 sq. ft.	75	125
Apartments	<	50 units	25	25
		50-100 units	25	50
		100-200 units	50	75
	>	200 units	75	125
Quality Restaurant	<	15,000 sq. ft.	25	50
	>	15,000 sq. ft.	25	75
Drive-in Restaurant	<	2,0000 sq. ft	25	75
	>	2,0000 sq. ft.	50	100
General Office	<	50,000 sq. ft.	25	50
		50,001-100,000 sq. ft.	25	75
		100,001-200,000 sq. ft.	50	100
		200,001-500,000 sq. ft.	100	150
	>	500,000 sq. ft.	125	250
Motel	<	150 rooms	25	75
	>	150 rooms	25	100

3-7 TRAFFIC CONTROL SIGNING AND STRIPING

All traffic control devices, signing, striping and other pavement delineation shall conform to the Manual on Uniform Traffic Control Devices (MUTCD). It shall be the developer's responsibility to furnish all materials and labor as required to install all traffic control as required by the city traffic engineer. All shown on the street improvement plans prior to plan approval.

3-8 TRAFFIC STUDIES

A. Responsibility for Traffic Studies

All traffic studies are governed by the Traffic Mitigation Ordinance and all rules adopted pursuant thereto. The applicant is urged to contact the City Traffic Engineer prior to beginning a traffic study.

Traffic studies are required by the city for all developments in the city that develop 50 or more "peak hour" trips in ether the A.M. or P.M. peak hour, or deemed necessary by the city's traffic engineer. Developments that develop less than the 50 trip threshold have the option of paying a fee of $80.00 per daily or preparing a traffic study to outline the impacts and mitigations. The primary responsibility for assessing the traffic impacts associated with a proposed development will rest with the developer, with the city serving in a review capacity.

The study is the responsibility of the applicant and must be prepared by a registered professional engineer with adequate experience in transportation traffic and/or transportation planning.

B. Traffic Study Format

1. Land Use:

   A brief description of the size of the land parcel, general terrain features and location within the city must be included in this section. In addition, the roadways that afford access to the site, and are included in the study area, must also be identified.

2. Existing and Proposed Uses:

   The existing and proposed uses of the site must be identified. The intent of the traffic study is to evaluate the traffic impacts due to the development. If the final use is not clear, the land use with the greatest overall traffic impact must be assumed for the study.

3. Project Trip Generation and Distribution

   The project trip generation is to be determined by the latest approved edition of the ITE Trip Generation Manual, unless otherwise required or approved by the city traffic engineer.

   The developments peak hour trips are to be distributed through the street network to a level of 10 peak hour trips.

4. Existing and Projected Volumes:

   Existing traffic volumes including turning movement counts will be provided by the city when available. Growth shall be calculated at 4% per year compounded annually.

   Separate graphics shall be provided for the existing volumes, for the site generated volumes, and for the cumulative SEPA project volumes. An additional graphic shall be provided compiling all of the information at the horizon year. Volumes including turning movements shall be shown throughout the study area for normal and peak hours.

5. The following Tables should be provided in the study:

Table A

LEVELS OF SERVICE (LOS)				
Intersection	**Existing**	**1998 w/project**	**1998 w/o projects**	**1998 w/mitigations**

Table B

VOLUME					
Roadway Section Intersection	**Project a.m. p.m. (1)**	**Existing a.m. p.m. (2)**	**1998 a.m. p.m. (3)**	**Proj. Vol. as % of Diff. 1/(302)**	**Proj. Vol. as % of Total 1/3**

NOTE: The horizon year is normally 5 years from the date of project application. A horizon year of 1998 is used here for illustrative purposes only.

6. Traffic Accidents:

   Traffic accident information may be required for affected street corridors and intersections. The study period will normally be 3 years. Information is available from the city.

   Estimates of increased or decreased accident potential must be evaluated for the development, particularly if the proposed development might impact existing traffic safety problems in the study area. Safety mitigation measures must be included where necessary.

7. Recommendations:

   In the event that analysis indicates unacceptable Levels of Service (LOS) in the study area, a description and cost estimate of the proposed improvements to return intersection to an acceptable LOS is required. The cost estimates should be all inclusive and include any additional right-or-way as required.

8. The Study shall also analyze the interface of entrances and exits with the city street system. The study shall also make recommendations regarding site circulation for both vehicles and pedestrians including handicap access.

3-9 UNDERGROUND UTILITIES

3-9.1 GENERAL

1. The WSDOT/APWA Standard Specifications shall apply unless otherwise stated below.

2. When trenching through existing pavement, the open cut shall be a neat line made by either saw cutting or jackhammering a continuous line. Saw cutting will be required unless the cut is made prior to reconstruction or an overlay.

3. Temporary pavement patch shall be accomplished by using cold mix (MC 250), ATB or steel plates.
4. Permanent pavement patch shall be as specified on Standard Drawing No. 316.

5. Where trench excavation equals or exceeds a depth of 4 feet, the developer/contractor shall provide, construct, maintain and remove, as required, safety systems that meet the requirements of the Washington Industrial Safety and Health Act, RCW 49.17, including WAC 296-155. The trench safety systems shall be designed by a qualified person, and meet accepted engineering requirements (see WAC 296-155-660).

6. The developer/contractor shall furnish, install, and operate all necessary equipment to keep excavations above the foundation level free from water during construction, and shall dewater and dispose of the water so as not to cause injury to public or private property or nuisance to the public. Sufficient pumping equipment in good working condition shall be available at all times for all emergencies, including power outage, and shall have available at all times competent workmen for the operation of the pumping equipment. Water pumped from the trench shall be disposed of using best management practices and shall not be pumped into streams nor to storm drains near streams.

7. Compaction tests will be required to ensure adequate compaction on all lifts. All compaction tests shall be considered by a licensed testing laboratory at the expense of the developer/contractor. See Section 3-4.4 of these Specifications.

8. Reference to the City Engineer below means the city's representative on site.

9. Water setting of backfill in trenches is not permitted.

3-9.2 TRENCH EXCAVATION

The length of trench excavation in advance of pipe laying shall be kept to a minimum and in no case shall exceed 150 feet unless specifically authorized by the City Engineer. The maximum permissible trench width between the foundation level to the top of the pipe shall be 40 inches for pipe 15 inches or smaller inside diameter; or 1-1/2 I.D. plus 18 inches for pipe 18 inches or larger. If the maximum trench width is exceeded without written authorization of the City Engineer, the developer/contractor will be required to provide pipe of higher strength classification or to provide a higher class of bedding, as required by the City Engineer.

3-9.3 TRENCH BACKFILL

Suitable native material excavated during trenching shall be used for trench backfill unless notified by the City Engineer that the native material is unsuitable. The City Engineer or his representative will examine excavated native material at the time of excavation to determine its suitability for use as backfill. Native material will be considered suitable for trench backfill if it is:

a) Capable of attaining the degree of compaction specified in Section 3-9.4 Compaction.
b) Within reasonable tolerance of optimum moisture content.
c) Reasonably free of organic material, clay, frozen lumps, rocks or other deleterious matter.

Unsuitable backfill material shall be removed from the site and hauled to an approved disposal site. The City Engineer shall be provided with the location of all disposal sites to be used and also copies of the permits and approvals for such disposal sites.

Imported material shall meet the requirements of Gravel Borrow as specified in Section 3-20.2 of these Standards or Crushed Surfacing Top Course as specified in Section 9-03.3(3) of the WSDOT/APWA Standard Specifications and Section 3-20.5 of these Standards.

3-9.4 COMPACTION

Trench backfill shall be spread in layers and compacted by mechanical tampers of the impact type approved by the City Engineer. The backfill material shall be placed in successive layers with the first layer not to exceed 2 feet above the pipe, and the following layers not exceeding 12 inches in loose thickness with each layer being compacted to the density specified below:

a) Improved areas such as street and sidewalks shall be compacted to 90% of maximum dry density to within 3 feet of subgrade. The last 3 feet shall be compacted to 95% of maximum dry density.

b) Unimproved area or landscape areas shall be compacted to 90% of maximum dry density.

3-9.5 TRENCHING LONGITUDINAL TO ROADWAY

Sewer, water and storm lines that are within the roadway section and longitudinal to the roadway shall be backfilled with native material or Gravel Borrow as approved by the City Engineer to the pavement patch level or subgrade, whichever applies. All other utility cuts such as gas, telephone, power, and cable TV shall be backfilled with controlled density fill.

3-9.6 TRENCHING TRANSVERSE TO ROADWAY

Utility trenching that crosses transversely to the roadway alignment will generally not be permitted unless it can be shown that alternatives such as jacking, auguring or tunneling are not feasible or unless the utility can be installed just prior to reconstruction or an overlay of the road. Should an open cut be approved, the trench shall be backfilled with controlled density fill. When high ground water levels are encountered, relief drains shall be installed at 15 feet intervals to prevent damming. The relief drains shall be 3 inch PVC and placed at a minimum 3 feet from finished grade or as otherwise approved by the City Engineer.

3-9.7 JACKING, AUGERING, OR TUNNELING

Tunneling may be ordered by the City Engineer under pavements, buildings, railroad tracks, etc. The developer/contractor shall install the pipe by jacking, auguring or tunneling, or installing the pipe in a casing pipe by a combination of these methods.

When use of a casing pipe is required, the developer/contractor shall be responsible to select the gauge and size required, unless otherwise indicated on the drawings, and consistent with his jacking or auguring operation, and shall be set to line and grade. During jacking or auguring operations, particular care shall be exercised to prevent caving ahead of the pipe which will cause voids outside the pipe. When the carrier pipe is installed within a casing pipe, the carrier pipe shall be skidded into position in an acceptable manner and to the line and grade as designated. The annular space between the casing and the pipe shall be filled with controlled density fill or as otherwise approved.

The faces of the jacking pit shall be constructed by driving steel sheets, or installing timber lagging as the excavation proceeds. The sheets, or lagging, shall extend a minimum of 5 feet below the bottom of the pit except at the entrance of the utility. Prior to jacking or auguring activities, shop drawings describing these activities, including dimensioning of pit length and size of underground borings and complete description of shoring, shall be submitted to the City Engineer for approval.

3-10 SURVEYING AND MONUMENTATION

3-10.1 DESCRIPTION

This work shall consist of all the surveying and monumentation required to construct the project as described in the plans and these Specifications.

It shall be the responsibility of the developer/contractor to furnish materials and install monuments and castings in accordance with the drawings and where directed by the engineer. All survey work shall be performed by or under the direct supervision, of a Professional Land Surveyor (PLS) licensed in the State of Washington. Monument and monument case and cover shall be supplied and installed per Standard Plan No. 313.

Surveying, as required to construct a given project per the approved plans, shall be furnished by the developer at no expense to the city. It is required that survey stakes be set for new curb and gutter construction, for both horizontal and vertical control. Additionally, any water, storm drain, or sanitary sewer mains which are to be constructed in easements are to have survey offset stakes set prior to starting that work, and any deviation from that staked line must be left uncovered and resurveyed to realign easement as required and for corrected as-built information.

3-10.2 MATERIALS

Materials for monumentation shall be Class 3000 concrete or commercial concrete per Section 6-12 of the WSDOT/APWA Standard Specifications and the monument case and covers shall be gray iron castings conforming to the requirements of AASHTO M 105, Class 30B. The cover and seat shall be machined so as to have perfect contact around the entire circumference and full width of bearing surface.

3-10.3 CONSTRUCTION REQUIREMENTS

Monuments shall be located at all centerline intersections of intersecting streets. Curved streets shall be monumented at centerline PI's (point of intersection), if it falls within the street pavement, otherwise the PC (point of curvature) and PT (point of tangency) of the curve shall be monumented.

It shall be the developer's/contractor's responsibility to provide the surveying required to establish or perpetuate land corner monumentation as may be required on the project.

All land corner surveying shall conform to the requirements of RCW 58.09. If the developer's or contractor's surveyor replaces or restores an existing or obliterated "General Land Office" (GLO) corner(s), it shall be their responsibility to file "Land Corner Records" for these monuments with the Snohomish County Auditor's Office.

When all land corners have been established, replaced or restored and monumented as described herein, the surveyor shall certify this information with a letter to the City Engineer. This certification letter shall include the location of the monumented corner(s) and that all land corner(s) have been monumented as described herein.

The city reserves the right to check survey points and/or the correct locations and elevations of new construction. These spot-checks will not change the requirements for normal checking and testing as described elsewhere, and do not relieve the contractor of the responsibility of producing a finished product that is in accordance with the contract. If unacceptable errors are found due to errors or omissions by the contractor's survey activities, then the contractor shall correct these error including removing and replacing improvements and pay all expenses incurred by the city including the re-survey.

3-11 STREET ILLUMINATION

Street lights shall be provided in plats and for commercial developments. Street light poles shall be aluminum with a concrete base. Special ornamental poles may be installed with approval of the City Traffic Engineer. The luminaires may be supplied and maintained by Snohomish County PUD. Special luminaires, which are not supplied by the PUD, must be approved by the City Traffic Engineer. All street light wiring, conduit and service connections shall be located underground.

Street light locations must be approved by the City Traffic Engineer.

The installation of special luminaires, not provided by the PUD, shall be the responsibility of the developer. The luminaires shall be full cut –off type and street light locations shall attempt to minimize illumination of salmonid streams to reduce the risk of predation.

3-12 GUARDRAILS

Unenclosed floor and roof openings, open and glazed sides of stairways, landings and ramps, balconies or porches, which are more than 30 inches above grade or floor below, and roofs used for other than service of the building shall be protected by a guardrail. See Sections 1712 and 3306 of the latest edition of the Uniform Building Code for specific requirements.

For Safety Rail see Section 3-16 of these Standards and Standard Drawing Nos. 325, 325A and 326.

Roadway guardrails shall conform to WSDOT/APWA Standard Plan C-1, Beam Guardrail Type 1. Guardrail anchors shall conform to WSDOT/APWA Standard Plan C-6, Guardrail Anchor Type 1. For local streets, end treatment shall conform to WSDOT/APWA Standard Plan C-6, Guardrail Anchor Type 1. For Principal arterials, Minor arterials, collector arterials, or other locations where the end of the guardrail is subject to head-on impacts, a crash tested guardrail terminal shall conform to WSDOT/APWA Standard Plan C-4b and C-4e. All concrete barrier and bridge rails shall have guardrail transition sections with appropriate end treatments. Redirectional landforms are not allowed for permanent installations.

3-13 MAILBOXES

New residential developments shall have mailboxes installed similar to Standard Plan Nos. 320 and 321A, or gang box supplied by the U.S. Postal Service similar to Standard Plan No. 321.

A. When mailboxes are located adjacent to the sidewalk, the sidewalk shall be widened to provide a clear width of not less than 5 feet from back of curb to any portion of the mailbox structure, per Standard Plan No. 321.

B. In the case of new road construction or reconstruction requiring mailboxes to be moved back or rearranged, the builder shall coordinate with the U.S. Postal Service through the Everett Postmaster in the main Post Office in Everett, for acceptable box locations and to ensure uninterrupted mail service. Approved locations for mailboxes shall be shown on street construction plans.

3-14 PAVEMENT PATCHING

3-14.1 DESCRIPTION

This work shall consist of the patching of various types of pavement cuts, the performances of which shall be in accordance with these Specifications, the WSDOT/APWA Standard Specifications and Standard Plan No. 315.

3-14.2 MATERIALS

All materials shall conform to the requirements specified for material in other sections of the WSDOT/APWA Standard Specifications as follows:

A. Asphalt concrete pavement patch shall be HMA Class ½" PG 64-22 meeting the requirements of Section 5-04.

B. Asphalt for temporary patch shall be MC 250 meeting the requirements of Section 9-02.

C. Cement concrete pavement patch shall be Class 4000 HES meeting the requirements of Section 6-02.

D. Crushed Surfacing Top Course shall meet the requirements of Section 9-03.0(3).

3-14.3 CEMENT CONCRETE PAVEMENT RESURFACED WITH ASPHALT CONCRETE

Streets which have cement concrete pavements surfaced with asphalt concrete shall be patched as shown on Standard Drawing No. 316.

The cement concrete portion of the patch shall be Class 4000, HES. The thickness shall be 1 inch thicker than the existing concrete base or 6 inches, whichever is greater. The top surface of the concrete patch shall match the top surface of the existing concrete base; in no case shall the top of the concrete be higher than the top of the existing concrete base. Brush finishing will not be required. Joints shall be placed to match existing or as directed by the engineer.

Asphalt concrete plant mix shall not be placed until 3 days after the cement concrete base has been placed or otherwise permitted by the engineer. The asphalt concrete plant mix shall not be placed until the concrete base has received a tack coat of CRS-2 at a rate of 0.12 to 0.20 gallons per square yard. The edges of the existing asphalt and castings shall also be painted with the tack coat. The asphalt concrete pavement shall then be placed, leveled, and compacted to conform to the surface of the existing asphalt pavement. Immediately, thereafter, all joints between the new and original asphalt pavement shall be painted with CSS-1 asphalt emulsion and covered with dry sand before the asphalt solidifies.

Asphalt shall be compacted to 92% of maximum density as determined by WSDOT Test Method 705.

3-14.4 ASPHALT CONCRETE ON GRANULAR BASE

After the Crushed Surfacing Top Course subgrade has been leveled and compacted, asphalt concrete pavement shall be placed to a thickness of 1 inch greater than the existing asphalt pavement depth or to a minimum of 3 inches, whichever is greater. Asphalt shall t compacted to 92% of maximum density as determined by WSDOT Test Method 705.

3-14.5 UNTREATED ROADWAY SURFACES

Existing crushed rock, gravel, and oil mat streets shall be restored with Crushed Surfacing Top Course to a compacted depth of 4 inches within the neat lines of the trench. Crushed surfacing shall be mixed, placed, spread and shaped in accordance with the requirements of Section 4-04 of WSDOT/APWA Standard Specifications. Compaction shall be as specified by one of the methods shown in Section 3-14.7(1) of these Specifications.

3-14.6 TEMPORARY PAVEMENT PATCHING

The contractor shall furnish, place and maintain temporary pavement patching, at locations as directed by the engineer, until such time as a permanent patch of permanent paving can be made.

Temporary pavement patch shall consist of a 2 inch thick course of cold mix asphalt (MC 250) over a 4 inch course of Crushed Surfacing Top Course. The crushed surfacing shall be compacted to 96% maximum density as determined by one of the methods described in Section 3-14.7(1) of these Specifications. Asphalt shall be compacted to 90% of maximum density as determined by WSDOT Test Method 705.

Temporary asphalt patching shall be required where roadway or walk is needed for vehicular or pedestrian traffic, during the construction period, until permanent pavement and sidewalks can be constructed.

In the event that the temporary surface subsides after the initial placement, additional MC 250 and Crushed Surfacing shall be applied to maintain the surface.

3-14.7 CONSTRUCTION REQUIREMENTS

3-14.7(1) GENERAL

Pavement patching shall be scheduled to accommodate the demands of traffic and shall be performed as rapidly as possible to provide maximum safety and convenience to public traffic.

The placing and compaction of the trench backfill and the preparation and compaction of the subgrade shall be in accordance with the various applicable sections of the WSDOT/APWA Standard Specifications except as modified by these Specifications.

Before the pavement patch is to be constructed the pavement shall be saw cut so that the marginal edges of the patch will form a rectangular shape with straight edges and vertical faces.

Signs, barricades, lights and other warning devices shall be installed per the requirements of the “Manual on Uniform Traffic Control Devices” and they shall be maintained 24 hours a day until the patching work is completed and ready for traffic.

Compaction of the subgrade shall be completed prior to the required patching. Subgrade compaction shall be to 95% as determined by one of the following methods:

ASTM D1556	(sand cone method)
ASTM D2167	(rubber balloon method)
ASTM D2922	(nuclear method)

3-14.7(2) CEMENT CONCRETE PAVEMENT

After the Crushed Surfacing Top Course subgrade for the pavement has been constructed and compacted to line and grade, the cement concrete pavement patch shall be placed and struck off to a thickness of 1 inch greater than the existing pavement or 8 inch minimum, whoever is greater. All work shall be in accordance with Section 5-05 of the WSDOT/APWA Standard Specifications, except as modified by these Specifications and Standard Drawing No. 316.

Through joints and dummy joints shall be placed to match existing or as directed by the engineer. The surface of the concrete patch shall be finished and brushed with a fiber brush. Approved curing compound shall be placed on the finished concrete immediately after finishing.

3-15 ROCKERIES AND ROCKWALLS

3-15.1 DESCRIPTION

This work shall consist of constructing rockeries with rock facing height of 8' or less used for erosion control or the containment of cuts and embankments. Work shall be performed in accordance with these Specifications and Standard Plan No. 324. Rockeries over 8' in height must be designed by a civil engineer licensed in the State of Washington.

3-15.2 MATERIALS

All rock shall be sound, angular ledge rock that is resistant to weathering. The longest dimension of any individual rock should not exceed three times its shortest dimension. Acceptability of rock will be determined by laboratory tests as hereinafter specified, geologic examination and historical usage records.

All rock delivered to and incorporated in the project shall meet the following minimum specifications:

a. Absorption ASTM C127 AASHTO T085	*Not more than 2.0% for igneous and metamorphic rock types and 3.0% for sedimentary rock types.*
b. Accelerated Expansion (15 days) CRD-C-148*1, *2	*Not more than 15% breakdown.*
c. Soundness (MgS04 at 5 cycles) ASTM C88 or CRD-C-137	*Not greater than 5% loss.*
d. Unconfined Compressive Strength ASTM D 2938	*Intact strength of 6,000 psi, or greater.*
e. Bulk Specific Gravity (155pcf) ASTM C127 or AASHTO T-85	*Greater than 2.48.*

*1. The test sample will be prepared and tested in accordance with Corps of Engineers Testing Procedure CRD-C 148, "Method of Testing Stone for Expansive Breakdown on Soaking in Ethylene Glycol."

*2. Accelerated expansion tests should also include analyses of the fractures and veins found in the rock.

The density of the rock shall be equal to, or greater than, one hundred fifty-five (155) pcf. Typically, rocks used for rock wall construction shall be sized approximately as shown on Standard Plan 324.

Rockery caps will be required on all rockeries higher than four (4) feet in the public right-of-way and optional on private property. The cement concrete cap shall be a minimum of two (2) inches thick. Concrete for Rockery Cap shall be Class 3000 or Commercial. Lamp black coloring agent to match the color of the rockery shall be added to the cement concrete during mixing in an amount not to exceed 1 ½ pounds per cubic yard of concrete. Where a pedestrian or ornamental handrail is required, the rockery cap shall be deepened to a minimum of twelve (12) inches for a section six (6) inches either side of each pipe sleeve. Dummy joints shall be constructed at twelve (12) foot intervals. The depth of the dummy joint shall be one-third the depth of the cap.

3-15.3 GENERAL

Surfaces reasonably accessible to pedestrians above and adjacent to rockeries over 30” in height shall be protected by a guardrail conforming to Section 1712 of the Uniform Building Code and to Section 3-16 of these Specifications.

A Public Works permit is required for all rock walls within the public right-of-way and for all those exceeding 4 feet in height on private property.

3-15.4 CONSTRUCTION REQUIREMENTS

The first step in rock wall construction, after general excavation, is to construct a keyway of at least twelve (12) inches in depth, extending for the full length of the rock wall. The keyway shall be slightly inclined back towards the face being protected. Once the competency of the keyway subgrade to support the rock wall is verified, a shallow ditch or trench, approximately twelve (12) inches wide and deep, shall be dug along the read edge of the keyway. A four-inch diameter perforated or slotted high-density polyethylene (HDPE), smooth interior pipe shall be placed in the trench. This drain pipe shall be installed with sufficient slope to initiate flow and the outfall connected to a positive and permanent discharge.

The contractor shall have sufficient space available so that he can select from among a number of stockpiled rocks for each space in the rock wall to be filled. Rocks which have shapes which do not match the spaces offered by the previous course of rock should be placed elsewhere to obtain a better fit. Rocks shall be of a generally cubical, tubular or rectangular shape. Any rocks of basically rounded or tetrahedral form shall be rejected or used for filling large void spaces.

The first course of rock shall be placed on firm unyielding soil. There shall be full contract between the rock and soil, which may require shaping of the ground surface or slamming or dropping the rocks into place so that soil foundation conforms to the rock face bearing on it. The bottom of the first course of rock shall be a minimum of twelve (12) inches below the lowest adjacent site grade.

As the rock wall is constructed, the rocks shall be placed so that there are no continuous joint planes in either the vertical or lateral direction. Whenever possible, each rock shall bear on at least two rocks below it. Rocks should be placed so that there is some bearing between flat rock faces rather than on joints. Joints between courses (the top surface or rock) shall slope back towards the cutface and away from the rock wall.

Because of the nature of the product used to construct a rock wall, it is virtually impossible to avoid creating void spaces between individual rocks. Where voids of greater than six inches in dimension exist in the face of a rock wall, they shall be visually examined to determine if contact between the rocks exists within the thickness of the rock wall. If there is no rock contact within the rock wall thickness, the void shall be chinked with a smaller piece of rock.

A rock drainage filter shall be installed between the rear face of the rock wall and the soil face being protected. This drain rock layer shall be at least twelve (12) inches thick. For rock walls eight (8) feet in height or higher, it shall be at least eighteen (18) inches thick. The material for the drainage filter shall be Quarry Rock, as specified in Section 3-20.7 of these Specifications.

3-16 METAL HAND RAILINGS

3-16.1 DESCRIPTION

This section applies to providing and building metal hand railings that meet the requirements of the Plans, these Specifications and the City Engineer.

3-16.2 MATERIALS

Materials shall meet the requirements of the following:

Ornamental Handrail

Ornamental handrail shall be constructed in accordance with Standard Plan No. 326 and these Specifications. Horizontal rails and vertical support posts shall be 1 ½ inches by 1 ½ inches by 1/8 inch tubular steel conforming to ASTM A120. Balusters shall be ½ inch by ½ inch and the horizontal bottom rail 1-1/2 inches by ½ inch by 1/8 inch channel steel (ASTM A120). Vertical support posts shall be a maximum 8 feet on center and balusters a maximum 4 inches per space. The center of the bottom rail shall be a maximum of 4 inches above finished grade. Finished height of the railing shall be 42 inches above the pedestrian walking surface. Provide slip joints at stairway expansion joints and at 24 feet on center maximum.

Pedestrian Handrail (Galvanized Steel and Aluminum)

Galvanized Steel and Aluminum pedestrian handrail shall be constructed in accordance with Standard Plan Nos. 325 and 325A and these Specifications. Horizontal rails and vertical support posts shall be 1-1/2 inch diameter Schedule 40 Standard pipe and balusters shall be ¾ inch diameter Schedule 40 Standard Pipe. Vertical support posts shall be on 8 foot centers and balusters on 4 inches clear space. Finished height of the railing shall be 42 inches above the pedestrian walking surface. Provide slip joints at stairway expansion joints and at 24 feet on center maximum.

3-16.3 FABRICATION

Before fabricating the railing, the contractor shall submit 6 copies of the shop plans for the engineer's approval. The contractor may substitute other rail connection details for those shown in the plans if details of these changes show in the shop plans and if the engineer approves. In approving shop plans, the engineer indicates only that they are adequate and complete enough. Approval does not indicate a check on dimensions.

Welding shall conform to the requirements of the "Structural Welding Code" AWS D1.1 for steel, and to the requirements of the "Specifications for Aluminum Structures" of the Aluminum Association, for aluminum alloys. All exposed welds shall be ground flush with adjacent surfaces.

Railing panels shall be straight and true to dimensions. Adjacent railing panels shall align with each other with a variation not to exceed 1/16 inch. Joints shall be matchmarked.

For structures on curves, either horizontal or vertical, the railing shall conform closely to the curvature of the structure by means of series of short chords. The lengths of the chords shall be the distance center to center of rail posts.

Steel railing units shall be galvanized after fabrication. Zinc used for galvanizing shall be grade Prime Western conforming to ASTM B6 with a minimum 2 ounces per square foot.

Completed aluminum railing units shall be anodized after fabrication conforming to the requirements of the Aluminum Class 1 Anodic Coating, AA-C22-A41.

Ornamental railing shall be painted with a rust proof metal primer and one coat of black ornamental iron metal paint.

3-16.4 INSTALLATION

The railing shall be erected in accordance with the plans on anchor bolts, or in holes formed by inserts provided in the concrete railing base to receive the railing posts. Sheet metal inserts shall be removed before the erection of the railing.

No railing shall be erected on the structure until the sidewalk to which it is to be attached is completed and all falsework supporting the system is released.

The railing shall be carefully erected, true to line and grade. Posts and balusters shall be vertical with the direction from the vertical for the full height of the panel not exceeding 1/8 inch.

Slip joints shall be as shown on Standard Drawing Nos. 325, 325A and 326. Railing installed without slip joints will be rejected and the contractor shall install new railing at his own expense.

3-17 CEMENT CONCRETE SIDEWALKS

3-17.1 DESCRIPTION

This work shall consist of constructing cement concrete sidewalks, thickened edge for sidewalks, curb ramps, and bus shelter pads, including excavation for the depth of the sidewalk and subgrade preparation, in accordance with these Specifications, the WSDOT/APWA Standard Specifications and Standard Drawings Nos. 306, 306A, 310A thru 310C and 311.

3-17.2 MATERIALS

Materials shall meet the requirements of the following section of the WSDOT/APWA Standard Specifications:

Cement Concrete Class 3000	6-02
Portland Cement	9-01
Aggregates	9-03
Premolded Joint Filler	9-04
Concrete Curing Materials and Admixtures	9-23

Slump of concrete mix shall not exceed 3-1/2 inches. Lamp black coloring agent for matching the color of newly constructed cement concrete sidewalks to the color of adjacent existing cement concrete sidewalks shall be added to the concrete during mixing in an amount not to exceed 1-1/2 pounds per cubic yard of concrete. No lamp black shall be used in curb ramps. The use of Calcium Chloride as an admixture is prohibited.

3-17-.3 CONSTRUCTION REQUIREMENTS

3-17.3(1) GENERAL

The curb and gutter section shall be placed prior to the placement of the sidewalk section unless otherwise directed by the engineer.

Subgrade shall be approved by the public works inspector prior to concrete being placed. Generally, ¼ inch V-grooves deep are to be placed on 5 feet centers, but at the discretion of the inspector this may be changed to make for a better match with the surrounding area. Expansion joints shall be placed to match those placed in curbs if new sidewalk is poured adjacent a curb and gutter, in all other cases the maximum spacing on expansion joints shall be 30 feet center to center. Dummy joints shall be ½ inch by 1-1/2 inch on 15 foot centers. Through joints shall be ½ inch by 4 inches.

A minimum distance of 3 feet is required from the face of curb to any obstruction on or within the sidewalk unless otherwise noted.

It is expected there will be sufficient suitable native material excavated from various portions of the improvement to fill low areas in the sidewalk subgrade and planting strip area when needed.

Where there is insufficient suitable native material on the project site, the contractor shall furnish, place and compact Gravel Borrow. All sidewalks shall be constructed over a minimum 2 inches of Crushed Surfacing Top Course meeting the requirements of Section 3-20.5 of these Specifications and Sections 9-03.9(3) of the WSDOT/APWA Standard Specifications compacted to 95% of maximum density.

3-17.3(2) FORMS AND FINE GRADING

Wood forms shall be 2”x4” (nominal) in lengths of not less than 10 feet. Steel forms may be used upon approval of the engineer. Forms shall be staked to a true line and grade. A subgrade template shall then be set upon the forms and the fine grading completed so that the subgrade will be a minimum of 3-5/8 inches below the top of the forms. Forms shall be provided around all street name sign posts and traffic sign posts that are placed in concrete areas. Forms used for this purpose shall be 1 foot square or 1 foot minimum diameter cutout, as approved by the engineer.

3-17.3(3) PLACING AND FINISHING CONCRETE

The concrete shall be spread uniformly between the forms and thoroughly compacted with a steel shod strikeboard. Through joints and dummy joins shall be located and constructed in accordance with the Standard Plans. In construction of through joints, the premolded joint filler shall be adequately supported until the concrete is placed on both sides of the joint.

Whenever castings are located in the sidewalk area, joints shall be installed at the casting location to control cracking of the sidewalk. If spacing of joints or scoring is such that installation of joint material would be unsuitable, the contractor shall install rebar to strengthen the sidewalk section.

Dummy joints shall be formed by first cutting a groove in the concrete with a tee bar of a depth equal to, but not greater than the joint filler material, and then working the premolded joint filler into the groove. Premolded joint filler for both through and dummy joints shall be positioned in true alignment at right angles to the line of the sidewalk and be normal to and flush with the surface. Where the sidewalk will be contiguous with the curb, it shall be constructed with a thickened edge as shown on Standard Plan No. 306A.

After the concrete has been thoroughly compacted and leveled, it shall be floated with wood floats and finished at the proper time with a metal float.

The surface shall be brushed with a fiber hair brush of an approved type in a transverse direction except that at driveway and alley crossings it shall be brushed longitudinally. The placing and finishing of all sidewalk shall be performed under the control of the engineer, and the tools used shall meet with his approval. After brush finish, the edges of the sidewalk and all joints shall be lightly edged again with an edging tool to give it a finished appearance.

The surface finish and joint pattern may vary at the direction of the engineer in order to match existing sidewalk.

3-17.3(4) CURING AND PROTECTION

The curing materials and procedures specified in Section 5-05.3(13) of the WSDOT/APWA Standard Specifications shall prevail, except that white pigment curing compounds shall not be used on sidewalks.

The contractor shall have readily available sufficient protective covering, such as waterproof paper or plastic membrane, to cover the pour of an entire day in event of rain or other unsuitable weather.

The sidewalk shall be protected against damage or defacement of any kind until it has been accepted by the engineer. Sidewalk which is not acceptable to the engineer because of damage or defacement, shall be removed and replaced by the contractor.

3-17.3(5) CURING AND HOT WEATHER

In periods of low humidity, drying winds, or high temperatures, a fog spray shall be applied to concrete as soon after placement as conditions warrant in order to prevent the formation of shrinkage cracks. The spray shall be continued until conditions permit the application of a liquid curing membrane or other during media. The engineer shall make the decision when the use of a fog spray is necessary.

3-17.3(6) COLD WEATHER WORK

When the air temperature is expected to reach the freezing point during the day or night, the concrete shall be protected from freezing. The contractor shall provide a sufficient supply of straw, hay, grass, earth, blankets, or other suitable blanketing material and spread it over the pavement to a sufficient depth to prevent freezing of the concrete. The contractor shall be responsible for the quality and strength of the concrete thus cured. Any concrete injured by frost action or freezing shall be removed and replaced at the contractor’s expense in accordance with these Specifications.

3-17.3(7) THROUGH AND CONTRACTION JOINTS

Standard locations for through joints for sidewalks are:

a) At street margins produced and at 30 foot intervals.

b) To separate concrete driveway, stairways, curb ramps and their landings from sidewalks.

c) Around the vertical barrel of fire hydrants, around utility poles and large diameter underground utility cover castings when located in the sidewalk area.

d) Longitudinally between concrete walks, curbs, paved planting strips and solid masonry or concrete walls where they abut.

e) To match as nearly as possible, the through joints in the adjacent pavement and curb when sidewalk abuts to curb.

Transverse contractions joints (dummy joints) shall be constructed with premolded material 3/8 inch wide by 2 inches depth, and set at 15 foot intervals, or as decided by the engineer. At no time will dummy joint spacing exceed 15 feet.

Transverse and longitudinal through joints as shown on Standard Plan No. 307 shall be 3/8 inch thickness premolded non-extruding joint material, cut to a width equal to the full depth of the concrete where located, plus ½ inch. When installed, they shall be placed with top edge 1/8 inch below the finished surface of the concrete, in a perpendicular plane to the surface and with the bottom edge embedded in the subgrade. All joints shall be in straight alignment, except where placed in curved locations.

Construction joints for sidewalks shall conform to the applicable requirements for through joints. The top edge shall be 1/8 inch below the finished surface of the sidewalk. At no time will joint spacing exceed 15 feet.

3-17.3(8) CURB RAMPS

In accordance with State law, curb ramps shall be provided at all pedestrian crossing with curb sections. It is required that when a ramp is constructed giving handicap access to the roadway area, the corresponding ramp at the opposite side of the roadway will also be required. Exact locations at each curb return will be approved in the field during construction.

Curb ramps shall be constructed in accordance with the Standard Plan Nos. 310A, 310B, 310C and 311. Curb ramps shall be constructed where shown on the plans or as described by the engineer. This work shall include curb ramps installed in new sidewalks and curb ramps to be installed in existing sidewalks. Existing sidewalks shall be neatly saw-cut full depth prior to construction of curb ramps.

Curb ramps shall be constructed separately from the sidewalk to produce a definite break line between the ramp and the sidewalk. A 3/8 inch non-extruded through joint material shall be installed between the curb ramp and the sidewalk with edging.

Ramp texturing is to be done with an expanded metal grate placed and removed from wet concrete to leave a diamond pattern as shown. The long axis of the diamond pattern shall be perpendicular to the curb. Grooves shall be 1/8 inch deep and ¼ inch wide.

Curb ramps will not be poured integral with sidewalk and shall be isolated by expansion joint material on all sides, but not at end of ramp adjacent to the roadway.

3-18 CURB AND GUTTER

3-18.1 DESCRIPTION

The standard curb and gutter section used in Everett shall be Type A-1 per Standard Plan No. 305A. No new curb and gutter is to be placed until forms have been checked and approved for line, grade and compaction by the public works inspector.

3-18.2 MATERIALS

Materials shall meet the requirements of the following Sections of the WSDOT/APWA Standard Specifications:

Portland Cement	9-01
Concrete Aggregate	9-03
Reinforcing Steel	9-07
Premolded Joint Filler	9-04
Curing Compounds	9-23

The Portland Cement Concrete shall meet the requirements of Sections 5-05 of the WSDOT/APWA Standard Specifications. Concrete mix for curbs shall be Class 3000. Slump of the concrete shall not exceed 3 ½ inches.

All new curb and gutter shall be placed over not less than 2 inches of Crushed Surfacing Base Course compacted to 95% maximum density.

Forms may be of wood or metal at the option of the contractor, provided that the forms as set will result in a curb, or curb and gutter of the specified thickness, cross section, grade and alignment shown on the drawings and Standard Plan No. 305A.

3-18.3 PLACING CONCRETE

The subgrade shall be properly compacted and brought to specified grade before placing concrete. The subgrade shall be thoroughly dampened immediately prior to the placement of concrete. Concrete shall be spaded and tamped thoroughly into the forms to provide a dense, compacted concrete free of rock pockets. The exposed surfaces shall be floated, finished and brushed longitudinally with a fiber hair brush approved by the engineer.

The rate of concrete placement shall not exceed the rate at which the various placing and finishing operations can be performed in accordance with these Specifications.

If concrete is to be placed by the extruded method, the contractor shall demonstrate to the satisfaction of the engineer that the machine is capable of placing a dense, uniformly compacted concrete to exact section, line and grade.

3-18.4 CURING

Transparent curing compounds shall be applied to all exposed surfaces immediately after finishing. Transparent curing compounds shall contain a color dye of sufficient strength to render the film distinctly visible on the concrete for a minimum period of 4 hours after application.

The contractor shall have readily available sufficient protective covering, such as waterproof paper or plastic membrane, to cover the pour of an entire day in event of rain or other unsuitable weather.

Additional requirements for curing in hot weather shall be as specified in Section 3-17.3(5) of these Specifications. Additional requirements for curing in cold weather may be found in Section 3-17.3(6) of these Specifications.

3-19 CEMENT CONCRETE DRIVEWAYS

3-19.1 DESCRIPTION

This work shall consist of cement concrete driveway and alley returns constructed at the locations shown on the drawings and where directed by the engineer, and shall be in accordance with these Specifications, the WSDOT/APWA Standard Specifications and Standard Plan Nos. 307, 308, and 309.

Type 1 driveways should only be used where there is likely to be limited stormwater runoff in the gutter line or adequate drainage facilities exist to prevent street stormwater from flowing onto adjacent properties.

3-19.2 MATERIALS

Materials shall meet the requirements of the following sections of WSDOT/APWA Standard Specifications:

Portland Cement	9-01
Fine Aggregate	9-03
Coarse Aggregate	9-03
Joint Materials	9-04
Curing and Admixtures	9-23

The concrete mix shall be as specified for Class 3000 and the slump of the concrete shall not exceed 3 inches.

A minimum of 2 inches of Crushes Surfacing Base Course shall be compacted to 95% maximum density prior to any placement of concrete.

3-19.3 CONSTRUCTION REQUIREMENTS

3-19.3(1) GENERAL

No driveway approach shall project beyond the extension of the side property line to the curb, unless the owner of the adjacent property is a co-signer of the driveway permit.

There must be at least 20 feet of full height curb between driveways serving any one property frontage.

The City Engineer shall have the authority to restrict the number, size and location of access driveways.

There must be at least 6 feet of full height curb between driveways on adjacent lots.

Driveway locations, lengths, etc. are further clarified in the Everett Municipal Code and must conform accordingly. In critical on-street parking areas, additional off-street parking space(s) are required for the on-street spaces eliminated by any driveway(s).

Driveway aprons shall be constructed per Standard Plan Nos. 307, 308, or 309 as applicable. The minimum thickness of the driveway apron shall be 6 inches, placed over a minimum of 2 inches of Crushed Surfacing Base Course compacted to 95% maximum density over a compacted subgrade. In all cases, subgrade and rock grade shall be approved by the public works inspector prior to concrete being placed. Driveway aprons over 15 feet wide shall have an expansion joint placed in the center of the apron.

In locations where a new driveway is to be constructed and sidewalk and curb and gutter is already existing, it must be totally removed and replaced to driveway standards. It is not permissible to "knock-off" existing curb and install driveway apron, the total curb and gutter section must be removed, either by sawcutting or to the nearest expansion joint, and replaced to driveway standards.

New driveways installed in areas where curb and gutter improvements are not existing, and not required to be installed, shall be paved from the existing edge of pavement to the property line regardless of whether the remainder of the driveway on the private property is paved.

In areas not fully improved with curbs and sidewalks, the elevation of the driveway at the point where it crosses the property line shall not be more than 3 inches higher than the elevation of the centerline of the existing paved street if driveway is rising on the private property side and no lower than level with the elevation of the centerline of the existing street if the driveway is going down on the private property side.

3-19.3(2) COMMERCIAL DRIVEWAYS

When allowed, driveways located closer than 200 feet from the approach to an arterial intersection shall be signed and marked "Right Turn Only" unless otherwise approved by the city traffic engineer.

A. Commercial Driveway Width:

Street Posted Speed MPH	Driveway Max Width* feet
25	30
26-45	36
Over 45	42

*Dimension "1" on Standard Plan Nos., 307, 308, and 309.

The minimum width of driveway shall be 20 feet.

B. Grade:

The maximum recommended grade is 8%. Vertical curves should be used for smooth transitions at significant grade differentials.

3-19.3(3) RESIDENTIAL DRIVEWAYS

A. **Width:** The maximum width shall be 20 feet at dimension "1" on Standard Plan Nos., 307, 308 and 309.

B. **Grade:** The maximum recommended grade is 15%. (20% for modifications to existing driveways.) Grade changes that exceed 16% shall require vertical curves to connect tangents.

3-19.3(4) INTERSECTION TYPE CRITERIA

Private intersection type driveway openings will be considered in lieu of conventional driveways in commercial areas where the criteria A through D below are met. Meeting the criteria is not a guarantee that an intersection type driveway will be allowed.

A. Projected driveway usage is greater than 1,000 vehicles per day.

B. The opening is at least 160 feet from any other intersection.

C. The opening is at least 160 feet from any other driveway on the property frontage under control of the applicant.

D. A minimum 100 feet storage area is provided between the curb line on the street and any turning or parking maneuvers within the development.

3-19.3(5) EXCAVATION AND SUBGRADE

Where directed by the engineer, unsuitable material in the subgrade shall be removed to a specific depth and backfilled with select material such as Gravel Borrow conforming to Section 3-20.2 of these Specifications.

Before any concrete is placed, the contractor shall bring the subgrade to the required line, grade and cross-section. The contractor shall maintain the subgrade in the required condition until the concrete is placed. Compaction shall be to 95% standard density.

3-19.3(6) FORMS AND FINE GRADING

Forms for the straight sections of the driveway or alley return shall have a minimum thickness of 2 inches and be equal to the nominal depth of the concrete. Plywood or 1 inch lumber may be used on radii. All forms shall be securely staked and blocked to true line and grade.

A template shall be set upon the forms and the subgrade shall be fine graded to conform to the required section. The subgrade shall then be compacted to the approval of the engineer. Prior to placement of the concrete, the subgrade shall be thoroughly dampened.

3-19.3(7) PLACING AND FINISHING

The concrete shall be spread uniformly between the forms and thoroughly compacted with an approved type of strikeboard. Through joints and contraction joints shall be located and constructed in accordance with the Standard Plans. In the construction of through joints, the premolded joint filler shall be adequately supported until the concrete is placed on both sides of the joint.

Contraction joints (dummy joints) shall be formed with a tee bar by first cutting a groove in the concrete to a depth equal to, but not greater than the joint filler material and then working the premolded joint filler into the groove. Premolded joint filler for both through and dummy joints shall be positioned in true alignment and at right angles to the center line of the driveway or alley return.

After the concrete has been thoroughly compacted and leveled, it shall be floated with wood floats and finished at the proper time with a metal float. Joints shall be edged with ¼ inch radius edger and the driveway or alley return edges shall be tooled with ½ inch radius edger.

The surface shall be brushed in a transverse direction in relation to the center line of the driveway or alley return with a fiber hair brush of approved type.

3-19.3(8) CURING AND PROTECTION

The curing materials and procedures specified in Sections 5-05 and 9-23 of the WSDOT/APWA Standard Specifications and Section 3-17.7 of these Specifications shall be used. The driveway and the alley return shall be protected against damage or defacement of any kind until acceptance by the Owner. Any driveway or alley return not acceptable, in the opinion of the engineer because of damage or defacement, shall be removed and be replaced by the contractor.

Before placing any concrete, the contractor shall have on the job site enough protective paper to cover the pour of an entire day, in event of rain or other unsuitable weather conditions.

3-20 PROPORTIONING OF MATERIALS

3-20.1 CONTROLLED DENSITY FILL (CDF)

CDF shall conform to the following specifications:

1. Portland Cement: Type I-II ASSHTO M85.

2. Mineral Filler Admixtures: pozzolans or fly ash (ASTM C-618, Class F).

3. Aggregate: Washed Coarse Sand.

CDF shall be used in the following proportions for 1 cubic yard. Batch weights may vary depending on specific weights of aggregates.

Portland Cement	50 lbs/yd^3
Fly Ash	250 lbs/yd^3
Washed Coarse Sand (SSD)	3,200 lbs/yd^3
Water	50 gals/yd^3 (Max)

Add sufficient water to provide a 6 inch to 8 inch slump delivered in place at the job site.

3-20.2 GRAVEL BORROW

The gradation for Gravel Borrow in Section 9-03.14 of the WSDOT/APWA Standard Specifications is superseded by the following:

U.S. Standard Sieve Size	Percent Passing By Dry Weight
3 inch	100
2 inch	85 - 100
1-1/4 inch	75 - 100
No. 4	30 - 70
No. 40	0 - 25
No. 200	5 Max.
Sand Equivalent	50 Min.

3-20.4 SPAWNING GRAVEL

Spawning Gravel shall be clean, well-rounded, uniformly graded and shall conform to the following gradation:

Sieve Size		Percent Passing
4”	Square	100
3”	Square	85 - 95
1-1/2”	Square	65 - 75
1/2”	Square	0 - 50
1/4”	Square	2 Max.

All percentages are by weight.

3-20.5 CRUSHED SURFACING

Crushed Surfacing Top Course and Crushed Surfacing Base Course shall meet the requirements of Section 9-03.9(3) of the WSDOT/APWA Standard Specifications.

3-20.6 FOUNDATION MATERIAL CLASS A

Foundation Material Class A shall meet the requirements of Section 9-03.17 of the WSDOT/APWA Standard Specifications.

3-20.7 QUARRY SPALLS

Quarry Spalls shall meet the requirements of section 9-13.6 of the WSDOT/APWA Standard Specifications.

3-20.8 NON-SHRINK CEMENT SAND GROUT

Non-shrink cement sand grout shall be proportioned as follows:

1 part high early strength (H.E.S.) cement.
2 parts clean fine-grained sand by weight and well-mixed with sufficient water to obtain a stiff consistency.

Unpolished aluminum powder shall be added to the dry cement in the proportion of one heaping teaspoonful per sack of cement no more than 30 minutes before the grout mixture reaches its final in-place position.

The required strength of the non-shrink concrete or grout shall be fc=4,000 psi and be verified by the cube strength test. The strength shall be confirmed by schmidt hammering of the pads.

Prior to placing the grout, the contact surface shall be thoroughly cleaned, roughened and wetted with water. The grout shall be covered with burlap sacks after the initial concrete set and wetted at regular intervals until the required strength is obtained.

SECTION 4 - STORM AND SURFACE WATER

4-1 GENERAL

This section of the Standards provides criteria for the design of storm and surface water drainage systems, including storm pipes, culverts, and catch basins. Each of the sections in this chapter contains the design criteria and reference standard details for the various systems or facilities.

Drainage control and stormwater treatment shall be provided for all property improvements within the City of Everett per these Standards, the City's Stormwater Manual, the City's Drainage Ordinance (#670-80 and subsequent revisions), the City's Surface Water Ordinance (#1750-90 and subsequent revisions), the City's Comprehensive Drainage Plan, and the City's Zoning Code.

Projects which will disturb one acre or more of land, or create 5,000 square feet or more of impervious surface, paved or otherwise, must refer to the City of Everett's Stormwater Manual for drainage plan and runoff control requirements.

4-2 STORM DRAINAGE CONVEYANCE SYSTEM DESIGN CRITERIA

4-2.1 OVERVIEW

For the purposes of this section, the conveyance system includes all portions of the surface water system that transport storm and surface water runoff, either natural or man-made, except those features protected as environmentally sensitive areas under the City's zoning code. Environmentally sensitive areas may only be modified as allowed under the City of Everett Zoning Code. Stormwater must generally be treated and detained prior to discharge to an environmentally sensitive area, including those features created for mitigation.

This section covers the following components of the conveyance system:

Pipe systems
Culverts
Outfalls
Open Channels

4-2.2 DESIGN FLOW AND ROUTE REQUIREMENTS

<u>Design Flow</u>

All existing and proposed conveyance systems shall be designed to convey runoff from the 25-year storm. The method used to determine the design flow will depend on the characteristics of the drainage area and the type of conveyance. Tight-lined conveyance systems receiving runoff from relatively small and/or highly impervious drainage areas shall be sized using flows determined using the rational method. Flows for culverts or channels receiving runoff from large and/or relatively pervious drainage areas shall be sized using flows determined using hydrograph methods. These methods of determining design flows are explained in detail in Section 1-6 of the City of Everett Stormwater Management Manual.

A backwater analysis (see Section 1-6 of the Stormwater Management Manual) may be required for a proposed or existing pipe system if the ability of the pipe system to convey the peak rate of runoff from the 25-year design storm event may be affected by tailwater conditions (outlet control) anywhere in the pipe system.

4-2.3 PIPE SYSTEMS

Pipe systems are networks of storm drain pipes, catch basins, manholes, inlets, and outfalls designed and constructed to convey storm and surface water. The hydraulic analysis of flow in storm drain pipes is typically limited to "gravity flow". The following subsections give design criteria for different components and aspects of pipe systems.

4-2.3(1) PIPE MATERIALS

1. Pipe material, joints, and protective treatment shall conform to the requirements set forth in Section 9-05 of the WSDOT/APWA Standard Specifications.

   The following pipe materials are allowed for use in pipe systems in the City of Everett; other pipe materials may be approved on a case-by-case basis:

   a) Plain concrete pipe (12 inches in diameter, used only for driveway culvert)
   b) Reinforced concrete pipe
   c) Ductile iron pipe
   d) Galvanized or aluminized corrugated iron or steel pipe, treatment 1 through 6 (not to be used in city maintained systems unless approved in advance by the City Engineer)
   e) PVC pipe (SDR35, ASTM D3034 with 3 feet of cover, minimum)
   f) Corrugated high density polyethylene pipe, with smooth interior

2. Coupling bands shall be of the same material as the pipe.

3. Materials for concrete, rubber gaskets, metal castings, reinforcing steel, and masonry units shall meet the requirements of the appropriate sections of the WSDOT/APWA Standard Specifications.

4-2.3(2) PIPE SIZES, SLOPES, AND VELOCITIES

1. No storm drain pipe between catch basins or manholes in the public right-of-way shall be less than 12 inches in diameter, with the exception that 8-inch pipe may be used between inlets and catch basins in runs of 50 feet or less.

2. The minimum velocity in any pipe or culvert carrying the design storm flow shall be 2 feet per second.

3. The maximum allowable velocity in concrete pipe shall be 30 feet per second.

4. Changes of pipe size are allowed only at junctions, and structures must be located at all junctions.

5. Downstream decrease in pipe sizes not a recommended practice and will only be allowed under special conditions.

4-2.3(3) STRUCTURES

1. Manholes, catch basins, and inlets shall be constructed of pre-cast units in accordance with the following Standard Plans:

Item	Section
Manholes	605A-C
Catch Basins	402 through 404
Inlets	401
Steps and Ladder	606, 606A
Frames and Grates	405 through 409

2. Catch basin (or manhole) diameter shall be determined by pipe size and orientation at the junction structure. A plan view of the junction structure, drawn to scale, will be required when more than four pipes enter the structure on the same plane, or if angles of approach and clearance between pipes is of concern. The plan view (and sections if necessary) must insure a minimum solid concrete wall distance between pope openings of 8 inches for 48 inch and 54 inch catch basins and 12 inches for 72 inch and 96 inch catch basins.

3. Catch basin evaluation of structural integrity for H-20 loading may be required for multiple junction catch basins and other structures.

4. Catch basins shall be provided within 50 feet of the entrance to a pipe system to provide for silt and debris removal.

5. HDPE pipe systems longer than 100 feet must be secured at the upstream end and the downstream end must be placed in a 4 foot section of the next larger pipe size. The sliding sleeve connection accounts for the high thermal expansion/contraction coefficient of this pipe material.

6. The maximum slope of the ground surface for a radius of 5 feet around a catch basin grate shall be 3:1.

7. A Type II catch basin or a manhole shall be required when the depth to the flow-line exceeds 5.5 feet, regardless of the pipe size.

8. All Type II catch basins and all manholes shall be equipped with ladders per Standard Plan No. 606 or 606A.

9. A Type II catch basin shall be installed as the last collector in the public right-of-way prior to discharge to the combined sanitary sewer.

10. Concrete inlets shall not be used where the discharge goes directly into the main storm drain system.

4-2.3(4) PIPE ALIGNMENT/CONNECTIONS/COVER

1. Pipes must be laid true to line and grade with no curves, bends, or defections in any direction, except for HDPE and ductile iron with flanged restrained mechanical joint bends (not greater than 30 degrees) on steep slopes.

2. A catch basin or manhole will be required at all changes in storm drain diameter and changes in grade or alignment.

3. Connections to a pipe system shall be made only at catch basins or manholes. No wyes or tees are allowed except on roof, footing, or yard drain systems on pipes 8 inches in diameter or less, with clean-outs upstream of each wye or tee.

4. 6 inches minimum vertical and 3 feet minimum horizontal clearance (between outside surfaces) shall be provided between storm drain pipes and other utility pipes and conduits.

5. Any closed storm drainage system collecting runoff from paved areas in the public right-of-way or private property shall provide for floatable material separation (see Standard Plan No. 410) prior to discharge to the main storm drainage system in the public right-of-way, unless otherwise approved by the City Engineer.

6. All PVC connections to catch basins or manholes shall be made by grouting in an approved manhole adapter into which the PVC pipe is inserted.

7. Activities such as trench excavation, tunneling or boring, pipe embedment, backfilling, compaction, safety and pavement patching, whether for public or private utilities, shall conform to the requirements set forth in other Sections of these Standards. For all the above, except pavement patching, see Section 3-9 Underground Utilities and Standard Plan Nos. 610, 611, and 615. For pavement patching see Section 3-14 and Standard Plan No. 316.

4-2.3(5) FRAMES/LIDS/GRATES/COVERS

1. In general, frames and grates shall be furnished and installed per Standard Plan Nos. 405 through 409.

2. The cover or grating of a manhole or catch basin shall not be grouted to final grade until the final elevation of the pavement, gutter, ditch, or sidewalk in which it is to be placed has been established, and until permission thereafter is given by the City inspector to grout the cover or grating in place.

3. Lids, grates, and covers shall be seated properly to prevent rocking.

4. All catch basins and manholes in unpaved areas shall be equipped with locking frames and lids or grates per Standard Plan Nos. 405 or 607.

5. All Type II catch basins and all manholes with catches shall be supplied with locking lids or grates per standard plan No. 405.

6. Type II catch basins and manholes functioning exclusively as access structures shall be equipped with round 24 inch covers and framed per Standard Plan No. 607.

7. Round lids on all storm drain structures shall have “Drain” cast into the lid.

8. In conditions when the effectiveness of a normal grate installation would be limited, an open curb face frame and grate shall be furnished and installed per Standard Plan Nos. 408 and 409. These conditions include high likelihood of clogging from leaf fall, especially in sag vertical curves; when the inlet is a surface drainage end point, such as a cul-de-sac; and when normal inlet grates may be passed over due to the road grade. The use of open curb face frame and grates must be approved by the City Engineer.

4-2.3(6) RESTRICTOR DEVICES

1. The minimum orifice size diameter allowed for use in the City of Everett is one inch.

2. Restrictor devices shall be constructed and installed in accordance with Standard Plan numbers 412A through 412C.

4-2.3(7) DEBRIS BARRIERS

Debris barriers (trash racks) are required on all pipes entering or leaving a closed pipe system, including pipes entering or leaving a control/restrictor manhole or catch basin from a surface-type BMP (detention pond, infiltration basin, wetpond, biofiltration swale, etc.).

4-2.3(8) DRAINAGE EASEMENTS

1. Public drainage easements a minimum of 15 feet wide are required for maintenance and access of pipes located outside of the public right-of-way which convey runoff from public streets or other facilities.

2. Where possible, pipes shall be located within the center of the drainage easement, but in no case shall a pipe be closer than five feet to a property line.

3. Where possible, drainage easements shall be contained on one lot, and not bisected by a lot line.

4. Shared private pipes must be located within private drainage easements.

5. Easements for downspout roof drains, yard drains, and footing drains are not required unless these systems are shared by more than one property owner.

4-2.4 CULVERT DESIGN CRITERIA

4-2.4(1) HEADWATER

1. For new culverts 18 inches in diameter or less, the maximum allowable 25-year design storm headwater elevation (measured from the inlet invert) shall not exceed two times the pipe diameter/arch culvert height used and shall be one foot or more below the road or parking lot subgrade.

2. For new culverts larger than 18 inches in diameter, the maximum 25-year design storm headwater elevation for the new culvert shall be one foot or more below the road or parking lot subgrade.

4-2.4(2) INLET

1. For culverts 18 inches in diameter and larger, the embankment around the culvert inlet shall be protected from erosion by rock lining or riprap as specified in Table 4-2.1, except the length shall be a minimum of five feet (upstream of the culvert) and the height shall be at the design headwater elevation.

2. Trash racks/debris barriers are required on culverts that are over 60 feet in length and that are 12 inches to 36 inches in diameter. Exceptions are culverts on fish-bearing streams.

3. In order to maintain the stability of roadway embankments, concrete headwalls, wingwalls, or tapered inlets and outlets may be required if right-of-way and/or easement constraints prohibit the culvert from extending to the toe of the embankment slope. Normally, concrete inlet structures/headwalls installed in or near roadway embankments must be flush with and conform to the slope of the embankment.

4-2.4(3) OUTLETS

The receiving channel at the outlet shall be protected from erosion by rock lining, as specified in Table 4-2.1, except the height shall be one foot above the maximum tailwater elevation or one foot above the crown of the pipe, whichever is higher.

4-2.4(4) FISH PASSAGE

Guidance for designing culverts for fish passage must be obtained from the Washington State Department of Fish and Wildlife.

4-2.5 OUTFALL DESIGN CRITERIA

4-2.5(1) GENERAL

1. All outfalls (at a minimum) shall be provided with rock protection per Table 4-2.1. For outfalls with a velocity at the design flow greater than 10 fps, a gabion dissipater or engineered energy dissipater shall be required.

2. Mechanisms which reduce velocity prior to discharge from an outfall are encouraged.
3. Engineered energy dissipaters, including stilling basins, drop pools, hydraulic jump basins, baffled aprons, and bucket aprons, are required for outfalls with velocity at design flow greater than 20 fps.

4. Inlet control will usually dictate outfall pipe system capacity. The inlet conditions should be carefully examined, as well as the consequences should the inlet to the pipe system become plugged or capacity exceeded.

4-2.5(2) OUTFALL SYSTEMS TRAVERSING STEEP SLOPES

1. Outfall systems constructed of pipe segments which are banded and/or gasketed are not acceptable for traversing steep slopes. Failure of the system will result from leaks which develop at the joints.

2. Continuously fused, welded or flange bolted mechanical joint pipe systems (such as high density polyethylene pipe (HDPEP) or ductile iron pipe with flange-bolted mechanical joints) with proper anchoring shall be used for outfall systems traversing steep slopes.

3. In general, outfall pipes systems shall be installed in trenches with standard bedding on slopes up to 20 percent. On slopes greater than 20 percent, outfall pipe systems shall be placed on the ground surface with proper pipe anchored.

4. HDPEP outfall systems must be designed to address the material limitations as specified by the manufacturer, in particular thermal expansion/contraction and pressure design. Sliding sleeve connections to address thermal expansion and contraction shall be used. These sleeve connections consist of a section of the appropriate length of the next larger size diameter of pipe

into which the outfall pipe is fitted. These sleeve connections must be located as close to the discharge end of the outfall as is practical.

5. Flows of very high energy will require a specifically engineered energy dissipation structure, as described above.

4-2.6 OPEN CHANNEL DESIGN CRITERIA

Open channels, either natural or artificial, may be used to convey stormwater on and from a site. In general, however, natural channels are protected as environmentally sensitive areas under the City's zoning code and may not be used to convey untreated, undetained stormwater. Alteration of these channels, including bank stabilization projects, requires special permits. Artificial channels are those constructed from upland areas specifically to convey storm and surface water. In general, the criteria in this section do not apply to biofiltration swales, which are primarily designed to treat stormwater runoff. Biofiltration swale design and construction criteria are found in Section 3-4 of the Stormwater Management Manual.

When constructing artificial channels, vegetation-lined channels are preferred when properly designed and constructed. Rock-lining may be necessary along the length of channels or at specific locations (such as bends and outfalls) when a vegetative lining will not provide adequate protection from erosive velocities.

4-2.6(1) ARTIFICAL CHANNELS

1. Channel section geometry shall be trapezoidal. Side slopes shall not be steeper than 3H:1V for vegetation-lined channels and 2H:1V for rock-lined channels, unless the channel is engineered specifically for steeper slopes.

2. A minimum 0.5 ft freeboard above design flows must be provided.

3. Vegetation-lined channels shall have bottom slope gradients of five percent or less and a maximum average velocity at the design flow of five fps.

4. Rock-lined channels shall be used when design flow velocities exceed five fps. Rock lining shall be in accordance with Table 4-2.2.

5. A maintenance access easement 15 ft wide (minimum) is required along all publicly maintained constructed channels located on private property. However, required easement widths and building setback lines may vary with channel top width. A minimum 15 ft setback must be provided between any structures and the top of the bank of the channel.

4-2.6(2) ROCK-LINING

In rock-lined channels, stone (riprap) is placed on the channel side and bottom to protect the underlying material from erosion. Proper riprap design requires the determination of the median size of stone, the thickness of the riprap layer, the gradation of stone sizes, and the selection of angular stone which will interlock when placed.

Research by the U.S. Army Corps of Engineers has provided criteria for selecting the median stone size, $^{W}50$ (Figure 4-2.1). If the riprap is to be used in a highly turbulent zone, such as a culvert outfall, downstream of a stilling basin, at sharp changes in channel geometry, etc., the median stone ($^{W}50$) should be increased from 200 percent to 600 percent depending on the severity of the locally high turbulence.

The thickness of riprap layer should generally be twice the median stone diameter ($^{D}50$) or at least that of the maximum stone. The riprap should have a reasonably well graded assortment of stone sizes within the following gradation:

1.25^{3} ($^{D}max/^{D}50)^{3}$ 1.50, ($^{D}15/^{D}50$) = 0.50, ($^{D}min/^{D}50$) = 0.25

4-2.6(3) RIPRAP FILTERS

Riprap should be underlain by a sand and gravel filter (or filter fabric) to keep the fine materials in the natural or artificial channel from being washed through the voids in the riprap. Likewise, the filter material must be selected so that it is not washed through the voids in the riprap. Adequate filters can usually be provided by a reasonably well graded sand and gravel material with $^{D}15<^{5d}85$, where d refers to the sieve opening through which 85 percent of the material being protected will pass and $^{D}15$ has the same interpretation for the filter material. A filter with a $^{D}50$ of 0.5 mm will protect any finer material including clay. Where very large riprap is used it is sometimes necessary to use two filter layers between the material being protected and the riprap.

For additional information and procedures for specifying filters for riprap and general guidance, refer to the Army Corps of Engineers Manual EM 1110-2-1601 (1970) "Hydraulic Design of Flood Control Channels", paragraph 14, Riprap Protection.

4-2.7 REQUIRED NOTES FOR STORM DRAINAGE PLANS

1. No part of the drainage system shall be covered, concealed, or put into use until it has been inspected, tested, and accepted by the City of Everett.

2. All work and material shall conform to the City of Everett Standards and Standard Specifications of WSDOT/APWA.

3. Approximate locations of existing utilities have been obtained from available records and are shown from convenience. The contractor shall be responsible for verification of locations and to avoid damage to any additional utilities shown. If conflicts with existing utilities arise during construction, the contractor shall notify the Public Works Inspector and any changes required shall be approved by the City Engineer prior to commencement of related construction on the project.

4. All storm systems within the public right-of-way or in easements must be staked by survey for line and grade prior to starting construction.

5. All catch basin grates must be stenciled or stamped **"Dump No Waste, Drains to Stream, Lake, River, Puget Sound, or Wetland."** Choose appropriate feature for the project.

Figure 4-2. 1 Median Stone Size Selection for Riprap Design.

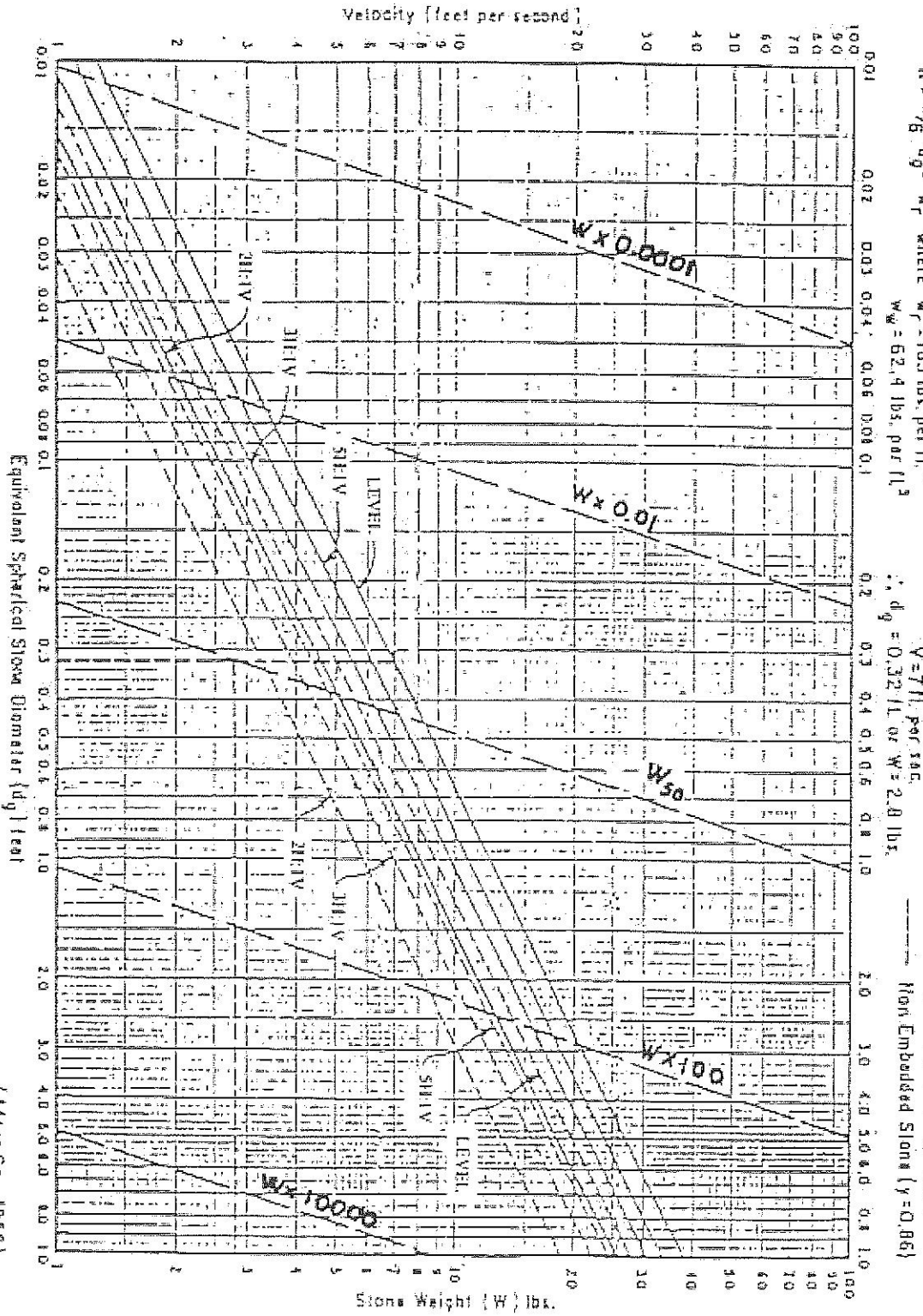

Table 4-2.1 Outlet Protection

Design Flow Discharge Velocity (fps)	REQUIRED PROTECTION (Minimum Dimensions)				
	Type	Thickness	Width	Length	Height
0 – 5	Riprap*	1 ft	Diameter + 6 ft	8 ft or 4x diameter, whichever is greater	Crown + 1 ft
>5 – 10	Riprap**	1 ft	Diameter + 6 ft or 3x diameter, whichever is greater	12 ft of 3X diameter, whichever is greater	Crown + 1 ft
>10 - 20	Gabion	1 ft	As required	As required	Crown + 1 ft

Note: The stone for riprap shall be hard, sound, and durable and free of rock fines, soil, or other extraneous material. It shall also be free of segregation, seams, cracks, and other defects which would tend to destroy its resistance to weather.

* Riprap for these velocities shall be reasonably well-graded with rock gradation as follows:

100% passing an 8 inch square sieve (maximum stone size = 8 inches)
40 – 60% passing a 6 inch square sieve (median stone size = 6 inches)
0 – 10% passing a 2 inch square sieve (minimum stone size = 2 inches)

** Riprap for these velocities shall be reasonably well-graded with rock gradation as follows:

100% passing a 24 inch square sieve (maximum stone size = 24 inches)
40 – 60% passing a 16 inch square sieve (median stone size = 16 inches)
0 – 10% passing a 4 inch square sieve (minimum stone size = 4 inches)

Note: The above riprap sizing assumes 3H:1V side slopes on the outlet channel.

Table 4-2.2 Channel Protection

Velocity at Design Flow	Required Protection	Thickness	Min. Height Above Design Water Surface
0 – 5 fps	Grass Lining/Bioengineering	Not applicable	0.5 feet
>5 – 8 fps	Riprap*/Bioengineering	1 ft	1 ft
>8 – 12 fps	Riprap**	2 ft	2 ft
>12 – 20 fps	Slope Mattress	varies	2 ft
>20 fps	Gabion, etc.	varies	varies

Note: The stone for riprap shall be hard, sound, and durable and free of rock fines, soil, or other extraneous material. It shall also be free of segregation, seams, cracks, and other defects which would tend to destroy its resistance to weather.

* Riprap for these velocities shall be reasonably well-graded with rock gradation as follows:

100% passing an 8 inch square sieve (maximum stone size = 8 inches)
40 – 60% passing a 6 inch square sieve (median stone size = 6 inches)
0 – 10% passing a 2 inch square sieve (minimum stone size = 2 inches)

** Riprap for these velocities shall be reasonably well-graded with rock gradation as follows:

100% passing a 24 inch square sieve (maximum stone size = 24 inches)
40 – 60% passing a 16 inch square sieve (median stone size = 16 inches)
0 – 10% passing a 4 inch square sieve (minimum stone size = 4 inches)

SECTION 5 - WATER DISTRIBUTION

5-1 GENERAL

All construction of water mains and related appurtenances shall conform to these Standards, applicable American Water Works Association (AWWA) Specifications and applicable sections of Division 7 of the WSDOT/APWA Standard Specifications. The general requirements of AWWA and the WSDOT/APWA Standard Specifications shall apply unless they are inconsistent with any of the provisions of this particular section. Should inconsistencies occur, these Standards shall have precedence. All reference to standard specifications such as AWWA or WSDOT/APWA shall require the use of the latest edition.

Any public water system or any plumbing in a residential or nonresidential facility providing water for human consumption which is connected to a public water system shall be lead free. With respect to solders and flux, “lead free” shall mean no more than 0.2% lead. With respect to pipes and pipe fittings, “lead free” shall mean no more than 8% lead.

Water main extensions will be required when the property does not front on a water main or when the existing water main is not adequate to meet the minimum fire flow requirement. The new water main extension shall extended across the proposals full frontage and shall be extended through and to the limits of the property being developed for system circulation or future development as determined by the Public Works Department. The minimum size water main shall be determined by the Public Works Department and shall be at least 8” inches in diameter unless otherwise approved by the Public Works Director or his designee.

Water main extensions or replacements and/or new fire hydrant installations may also be required per the requirements of the City Fire Marshal. Fire hydrant installations are not allowed on water mains that do not meet the minimum fire flow requirements of the area. In a single family / duplex neighborhood, the fire flow in the main must be a minimum of 1000 gpm before the installation of a fire hydrant is allowed.

A fire hydrant is required within 350 feet of every structure for single family homes and duplexes as well as new subdivisions and short subdivision for single family homes and duplexes.

For all other buildings from triplexes to commercial uses, a fire hydrant is required within 200 feet, but not closer than 50 feet to any structure (measured distance to be along route to be traveled by fire equipment).

Water meters are required for all new services including domestic, irrigation and fire services.

Unless finish grade information is provided to the water service construction crew prior to the installation, the property owner/applicant will be responsible for and may be charged for any necessary adjustments.

After the installation of any water service by the Public Works Department, the property owner shall be held responsible for, and may be charged for, any and all damages to the service line, meter setter, meter and meter boxes/vault or any other appurtenances until completion of construction and/or the structure is approved for occupancy.

All water mains on private property that are looped back to the public right-of-way or are open to the general public system shall be installed in easements, granted to the City, and shall be maintained by the City. (See Section 5-8.6 for main looping requirements.)

The minimum water main easement width shall be 15 feet, 5 feet on one side and 10 feet on the other side and shall be exclusive for the water main and appurtenances. The legal description shall be prepared by a Surveyor licensed to practice in the State of Washington. The easement shall be reviewed and approved by the Public Works Director or his designee prior to acceptance.

Due to the complexities of many water mains and their interface with other underground structures, all water main construction shall be staked to ensure placement within designated easements. Any deviation from this requirement must be approved by the Public Works Director or his designee.

Upon completion of the installation of the water system, the original signed drawing of the water construction plan must be edited to reflect actual constructed conditions (Record Drawings) by the developer/contractor, certified as such by him and turned into the City. A Record Drawing print shall be submitted for checking by the City Inspector and Public Works Department prior to submitting the revised originals. The water Record Drawing shall be submitted within 14 days of the public water main becoming live.

The installation of all water mains and appurtenances shall be in accordance with the construction plans as approved by the Public Works Director or his designee for the project. Any deviations or changes are to be approved by Public Works Director or his designee before the changes are incorporated into the work.

All materials shall be new and undamaged. Unless otherwise approved by the Public Works Director or his designee, the same manufacturer of each item shall be used throughout the work. Contractors shall furnish a water tight plug of the appropriate size which shall be installed in the end of the water main anytime work is delayed or stopped.

5-2 CONSTRUCTION PLANS

A. Water plans are to be separate from others and shall have water mains highlighted and indicate locations of other utilities.

B. Plans must show easements where mains are on private property and all hydrants, meters, and other appurtenances must be within the easements. Easements must meet the requirements of Section 5-1.

C. Easements must be executed at completion of construction and mains must be in the middle of easement as much as possible. Access to easements for maintenance must remain open. Structures, fences, and shrubs are not to be planted on easements.

D. Show elevations of sewer mains, water mains and storm drains where they cross each other.

E. Potable water mains shall maintain a minimum of 10 feet horizontal clearance and 18 inches vertical separation above non-potable utilities (including sewer, storm drainage and irrigation) whenever possible. If site conditions do not allow such minimum separations, pipelines may be located closer to each other provided additional precautions are identified and instituted to assure protection of the potable line. No other utilities, potable or non-potable, shall be within 5 feet horizontal and 12 inches vertical from the water main.

F. All installed hydrants must be covered by a burlap bag or other suitable covering until accepted by the Public Works Director or his designee and placed in service.

G. A Washington State approved backflow prevention device is required for all irrigation systems.

H. All environmental sensitive areas shall be shown on the water system construction plans.

I. Plans must show required thrust restraint per Section 5-13 of these Standards.

J. All Water Construction Plans shall be prepared, stamped and signed by an Engineer registered in the State of Washington.

5-2.1 REQUIRED NOTES ON PLANS

A. No connection to the existing mains will be allowed except by means of an approved backflow prevention device prior to satisfactory flushing, testing, disinfection, and receipt of satisfactory bacteriological test results.

B. Connections to and taps on existing mains will be made by the Public Works Department at the developer's expense. The Public Works Department shall be given at least 5 business days notice for each connection. The Public Works Department shall thereafter determine the date and time at which the connection shall be made.

C. All work and materials must conform to City of Everett Standards.

D. A pre-construction meeting shall be held with the City prior to the start of construction. The City of Everett Public Works Construction Division must be notified at least 24 hours prior to commencement of construction.

E. The developer or the developer's authorized agent shall notify the Public Works Department of a person who can be contacted regarding problems during construction on a 24 hour basis.

F. Maintain a minimum of 10 feet horizontal and 18 inches vertical separation between potable and non-potable conveyance systems.

G. All City of Everett valves shall be operated by Public Works Department personnel only. All valves, new and existing, shall be accessible at all times.

5-3 BACKFLOW PREVENTION

All water system connections to serve building or properties with domestic potable water, fire sprinkler systems, or irrigation systems shall comply with the minimum backflow prevention requirements as established by the Washington State Department of Health (DOH) in WAC 246-290-490 and WAC 246-290-010 and the City of Everett Cross Connection Control Ordinance in Municipal Code 14.20.

To prevent contaminated water from the new main from entering the existing distribution system, a Washington State approved double check valve assembly shall be used on the line supplying the water and shall meet the requirements in Section 5-17 of these standards. The double check valve assembly shall be located as approved by the Public Works Director or his designee. A double check valve assembly is sufficient backflow protection only for filling and flushing of the new main. During the hydrostatic pressure test, the temporary connection between the new main and the existing distribution system shall be removed.

For fire and irrigation, the minimum level of backflow prevention required is a state approved double check valve assembly. Fire services shall have a double check detector check valve assembly. Air gaps and reduced pressure backflow assemblies must be Washington State approved and are required wherever a potential health hazard exists.

The Public Works Department has the authority to perform regular inspections on all backflow prevention assemblies connected to the City's water system and shall be provided access to the premises to inspect. The Public Works Director or his designee shall receive a passing certificate from a Washington State certified tester for all backflow prevention assemblies before releasing the certificate of occupancy on any building. A list of approved testers may be obtained from the Public Works Department.

Plan approval does not constitute approval of a backflow prevention system. A separate backflow prevention system approval must be obtained from the Public Works Director or his designee prior to initiation of water service.

5-4 EXISTING UTILITIES

When utility services occupy the same space as the new water main, the contractor shall do all necessary excavation to fully expose such services. The contractor shall protect said services and work around them during excavating and pipe laying operations. The contractor shall be responsible for all damages to the services due to his operation and shall immediately notify the Public Works Department and arrange for replacement of all damaged services.

In the event of conflict, the contractor shall remove and restore existing catch basin connections, inlet connections, drains, side sewers, inlets, and other sewerage and drainage facilities. All restoration shall be constructed to City standards. Water main pipe shall be installed to provide the minimum required clearances from non-potable conveyance systems as required in Sections 5-1 and 5-2.

It is anticipated that the contractor will encounter private water service utilities (water service lines running between the City water distribution piping and private residences) during work operations. Records of these utilities are not maintained by the City and will not be field located by the City. It shall be the contractor's responsibility to ascertain the location of and protect these private utilities from damage.

Ends of abandoned water main shall be plugged by filling with Class 3000 or Commercial Concrete for a minimum longitudinal length of twelve (12) inches.

5-5 FIRE FLOW

The fire flow requirements are determined by the Fire Department. The Public Works Department will evaluate whether the existing system will meet that requirement or if system improvements are required. Due to seasonal and other variables associated with field flow tests, these flow tests will not be used to measure the system's ability to meet the fire flow requirements.

Design and construction of water distribution system improvements necessary to meet minimum fire flow requirements for a proposed development shall be the responsibility of the developer or owner of the proposed development.

5-6 PIPE AND FITTINGS FOR WATER MAINS

5-6.1 DESCRIPTION

The work included in the following sections shall apply to the construction of water distribution mains and appurtenances for both temporary and permanent installation.

All materials shall be new and undamaged. Unless otherwise approved by the Public Works Director or his designee, the same manufacturer of each item shall be used throughout the work.

5-6.2 MATERIALS

All water main distribution piping shall be ductile iron pipe, cement lined, special thickness Class 52, unless otherwise specified and shall conform to the requirements of ANSI/AWWA C-151/A21.51, and be installed in accordance with the manufacturer's recommendations. Any deviation from this policy must be approved by the Public Works Director or his designee on the plans for the project.

Cement lining thickness shall be in accordance with ANSI/AWWA C-104/A21.4.

High Density Polyethylene Pipe (HDPE) shall not be permitted without the approval of the Public Works Director or his designee. In order to be considered for approval, the Developer shall provide a report prepared by an engineer licensed in Washington State clearly stating the need to use HDPE water main pipe. Factors to address in the report influencing use of HDPE could include, but not be limited to, soil liquefaction and high soil corrosiveness. Also include calculations, or modeling, showing fire flow demand still being met with use of HDPE pipe.

The pressure rating for HDPE water main pipe shall be the greater of 1.25 times the static pressure at the lowest point of the proposed water main system or 160 psi.

All HDPE used within the Water Distribution System shall be Ductile Iron Pipe size (DIPS), meet requirements of AWWA C906, may be designated either PE3408, PE3608 or PE4710 and shall have blue stripes co-extruded into the wall of the pipe.

Tracer wire for use with approved HDPE pipe installations shall be #10 high strength solid copper or copper clad steel with blue HDPE or HMWPE (High Molecular Weight Polyethylene) coating.

Connectors need to be the moisture displacement type.

Provide warning tape that is color coded for potable water.

5-6.3 JOINTS AND FITTINGS

Rubber gasket pipe joints shall be push-on-joint or mechanical joint (M.J.) in accordance with ANSI/AWWA C-111/A21.11, unless otherwise specified. Flanged joints shall conform to ANSI/AWWA C-115/A21.15.

Bolts on mechanical joints and fittings shall be tightened uniformly with a torque wrench in accordance with the manufactures recommendation for tightness and order of installation. The minimum range of torque for mechanical joints shall be as follows:

Bolt size - inches	Range of Torque - ft/lbs
5/8	40-60
3/4	60-90
1	70-100
1-1/4	90-120

Nuts spaced 180 degrees apart shall be tightened alternately in order to produce equal pressure on all parts of the gland.

Set screws on retained glands shall be torqued to manufacturer's specifications.

Bolts for fittings and joints shall be cast or ductile iron, zinc or chromium plated or stainless steel.

Cast or ductile iron fittings shall be short body for pressure rating of 150 psi, unless otherwise noted. Metal thickness and manufacturing process shall conform to applicable portions of ANSI A21.20, A21.11, B16.2 and B16.4. All fittings shall be cement lined per ANSI/AWWA C104/A21.4.

5-7 TRENCH EXCAVATION, BEDDING AND BACKFILL FOR WATER MAINS

5-7.1 DESCRIPTION

This work shall consist of excavating, bedding, and backfilling for water mains and appurtenances, for both temporary and permanent installation under ordinary conditions.

5-7.2 GENERAL

Clearing and grubbing where required shall be performed within the easement or public right-of-way as permitted by the City and/or governing agencies. Debris resulting from the clearing and grubbing shall be disposed of by the owner or contractor in accordance with the terms of all applicable permits.

Material excavated from trenches and piled adjacent to the trench or in a roadway or public thoroughfare, shall be piled and maintained so that the toe of the slope of the material is at least 2 feet from the edge of the trench. It shall be piled in such a manner as will cause a minimum of inconvenience to public travel and so that there is a minimum risk of sediment erosion. Provisions shall be made for merging traffic where such is necessary. Free access shall be provided to fire hydrants, water valves, and meters, and clearance shall be left to enable free flow of storm water in gutters, other conduits, and natural watercourses. Free access shall be maintained to all other utility control valves, meters and vaults.

5-7.3 GRADE AND ALIGNMENT

Prior to any pavement cutting or removal, or excavation for pipe laying, the contractor shall verify, in the presence of the City Inspector, the locations and establish the depth of the existing water mains at the points where connections are to be made. The contractor shall verify the dimensions, type, and condition of the existing water main. The profile shall be adjusted so neither a high spot nor a low spot is created adjacent to the connection to the existing water mains.

The minimum cover for water mains less than 12 inches in diameter shall be 36 inches to the top of pipe. The minimum cover for water mains equal to or greater than 12 inches in diameter shall be 48 inches to the top of pipe. The maximum depth shall not be greater than 60 inches to the top of pipe.

All depths both minimum and maximum shall be from finish grades and shall be adhered to unless approved by Public Works Director or his designee in writing. The water line and hydrants shall be installed by line and grade information as supplied by a survey.

5-7.4 TRENCH EXCAVATION

5-7.4(1) GENERAL

The contractor shall perform all excavation of every description and of whatever materials encountered. All excavations shall be made by open cut unless otherwise provided for. The bottom of trenches shall be accurately graded to provide uniform bearing and support for each length of pipe on undisturbed or compacted soil at every point along its entire length, except at the joints.

Bell holes shall be excavated to the extent necessary to permit accurate work in making and inspecting the joints. The banks of the trenches shall be kept as nearly vertical as soil conditions will permit. Where determined necessary by the contractor to control trench width, to protect adjacent structures, or to provide safe working conditions, the trench shall be properly sheeted and braced. See Section 3-9 of

these Standards for additional information on trenching including excavation, dewatering, trench width, backfill, and compaction.

5-7.4(2) TRENCH WIDTHS

Unless otherwise approved by the Public Works Director or his designee, the trench sides shall be excavated vertically and the trench width shall be excavated only to such widths as are necessary for adequate working space as noted on Standard Drawing No. 610. The trench shall be kept free from water until pipe joining is complete.

5-7.4(3) CRIBBING AND SHEETING-SHORING

The contractor shall adequately shore trenches to protect the work, existing property, utilities, pavement, etc., and to provide safe working conditions in the trench. The method of shoring shall be according to the contractor's design. The contractor may elect to use a combination of shoring and overbreak, tunneling, boring, sliding trench shields or other methods of accomplishing the work, provided the method meets all applicable local, state and federal safety codes. Damages resulting from improper cribbing or from failure to crib shall be the sole responsibility of the contractor.

At any time the City chooses to inspect or have access to the work, the work site must be in full compliance with trench safety standards as outlined in Section 3-9.1 of these Standards.

5-7.4(4) UNSUITABLE MATERIAL

Whenever in excavating the trench for water mains and the bottom of the trench exposes peat, soft clay, quicksand, or other unsuitable material, such material shall be removed from the trench and replaced by Foundation Material Class A as specified in Section 3-20.6 of these Specifications. All unsuitable material shall be loaded directly into trucks and hauled to a waste site obtained by the contractor. Stockpiling of unsuitable material at the project site is not permitted.

5-7.4(5) BEDDING THE PIPE

Bedding material, when specified or required by the Public Works Department, shall be Sand in accordance with 3-20.3 of these standards or Crushed Surfacing Base Course meeting the requirements of Section 9-03.9(3) of the WSDOT/APWA Standard Specifications. Bed the pipe within the Pipe Zone shown in Standard Drawing No. 610 and defined in Standard Drawing No. 611. Native material may be used for bedding for ductile iron pipe within the Pipe Zone if judged suitable by the Public Works Department.

5-7.4(6) BACKFILLING TRENCHES

See Section 3-9.3 of these Standards for unsuitable backfill except as noted herein. For water main installations, unsuitable backfill material shall be removed from the site, disposed of, and replaced by Gravel Borrow as specified in Section 3-20.2 of these Specifications and as directed by the Public Works Department.

In backfilling the trench, the contractor shall take all necessary precautions to protect the pipe from any damage or shifting. The contractor shall backfill from the side of the trench to a maximum uniform depth of 1 foot above the crown of the ductile iron pipe before starting mechanical compaction.

During all phases of the backfilling operations and testing as outlined herein, the contractor shall protect the pipe installation, protect adjacent utilities and structures, provide for the maintenance of traffic as may be necessary, and provide for the safety of property and persons.

5-7.4(7) COMPACTION OF BACKFILL

Trench backfill shall be spread in layers and be compacted by mechanical tampers of the impact type approved by the Public Works Director or his designee. Water settling will not be permitted. After the Pipe Zone backfill is placed the remaining backfill material shall be placed in successive layers not exceeding 1 foot in loose thickness, and each layer shall be compacted to the density specified in Standard Drawing No. 615.

See Section 3-9.4 for additional requirements on compaction.

5-8 CONSTRUCTION REQUIREMENTS

5-8.1 DEWATERING OF TRENCH

Where water is encountered in the trench, it shall be removed during pipe-laying operations and the trench so maintained until the ends of the pipe are sealed, provisions are made to prevent floating of the pipe, and the trench has been properly backfilled and compacted in accordance with Section 5-7.4 of these standards. Trench water or other deleterious materials shall not be allowed to enter the pipe at any time. Trench water shall be discharged in accordance with Section 3-9.1 of these standards.

5-8.2 HANDLING OF PIPE

All types of pipe shall be transported, handled, stored, installed and backfilled in a manner that will prevent damage to the pipe, pipe lining or coating. Pipe and fittings shall be loaded and unloaded using hoists and slings in a manner to avoid shock or damage, and under no circumstances shall they be dropped, skidded, or rolled against other pipe. Damaged pipe will be rejected, and the contractor shall immediately place all damaged pipe apart from the undamaged and shall remove the damaged pipe from the site within 24 hours.

Methods of handling shall be corrected by the contractor if the Public Works Department determines that these methods are damaging to the pipe.

All pipe to be purchased and installed as a part of the City of Everett water system shall be delivered to the job site or city yard with water tight pipe plugs. Furthermore, to comply with City of Everett Design and Construction Standards and AWWA Standards, these pipe plugs shall remain in place until the pipe is installed in the trench at which time one end plug would be removed for joining pipe ends.

The City shall reject any pipe not meeting AWWA Standards for water tight pipe plugs. Under special circumstances, the Public Works Department may reconsider the pipe after it has been swabbed out with chlorine solution and capped with water tight plugs meeting AWWA Standards.

Dirt or other foreign material shall be prevented from entering the pipe or pipe joint during handling or laying operations, and any pipe or fitting that has been installed with dirt or foreign material in it shall be removed, cleaned, and relayed. A clean whisk broom shall be used for this purpose and for brushing to

remove foreign matter prior to joining of pipe ends. At times when pipe laying is not in progress, the open ends of the pipe shall be closed by a watertight plug or by other means approved by the Public Works Director or his designee to ensure cleanliness inside the pipe.

Pipe shall be stacked in such a manner as to prevent damage to the pipe, to prevent dirt and debris from entering the pipe, and to prevent any movement of the pipe. The bottom tiers of the stack shall be kept off the ground on timbers, rails or other similar supports. Pipe on succeeding tiers shall be alternated by bell and plain end. Timbers 4 inches by 4 inches in size shall be placed between tiers and chocks shall be placed at each end to prevent movement. For safety each size of pipe shall be stacked separately.

5-8.3 CUTTING PIPE

Whenever it becomes necessary to cut a length of pipe, the cut shall be made by abrasive saw or by a special pipe cutter. All pipe ends shall be square with the longitudinal axis of the pipe and the outside shall be beveled and otherwise smoothed so that good connections can be made without damage to the gasket. Threads shall be cleanly cut. Oxyacetylene torch cutting of ductile iron pipe is not permitted.

5-8.4 LAYING PIPE ON CURVES

Long radius curves, either horizontal or vertical, may be laid with standard pipe by deflecting the joints. If the pipe alignment is shown curved in the drawings and no special fittings are shown, the contractor can assume that the curves can be made by deflecting the joints with standard lengths of pipe. If shorter lengths are required, the drawings will indicate maximum lengths that can be used. The amount of deflection at each pipe joint when pipe is laid on a horizontal or vertical curve shall not exceed the manufacturer's printed recommended deflections.

Where field conditions require deflection or curves not anticipated in the drawings, the Public Works Department will determine the methods to be used.

When rubber gasketed pipe is laid on a curve, the pipe shall be jointed in a straight alignment and then deflected to the curved alignment. Trenches shall be made wider on curves for this purpose. Maximum deflections at pipe joints and laying radius for various pipe lengths shall conform to the manufacturers and/or AWWA standard, whichever is more conservative, for the given type of pipe.

5-8.5 CONNECTIONS TO EXISTING MAINS

All new taps and/or connections to existing water mains shall be done by the Public Works Department unless specifically approved in writing by the Public Works Director or his designee. All costs incurred shall be borne by the developer or contractor requesting the service. It shall be the contractor's responsibility to arrange for the taps with the Public Works Department. A deposit is required for the work to be done must be paid prior to any work being scheduled or done by City forces. The amount of the estimate for the cost of the work will be determined by the Public Works Department.

The City Development Technician will initiate a request to the Public Works Department for a cost estimate to tap the existing water main and to extend the water line to a designated point at the edge of the right-of-way furthest from the tapping location. In the case of an existing water line easement, the designated point will be up to one (1) pipe length beyond the tapping connection.

After receiving the required deposit for the estimated work, the Public Works Department will schedule, order materials, and perform the described work as outlined in the estimate.

No water system valves on existing mains shall be operated by the contractor. The Public Works Department will operate all valves to accomplish shutdowns and subsequent reactivations. Draining of existing water mains will be done by the Public Works Department.

The developer/contractor will connect a double check valve assembly to the end of the water line at the designated point as shown on the approved plans. The double check valve assembly will be required during flushing and purity tests. The temporary connection between the new main and the existing distribution system shall be removed during the hydrostatic pressure test.

After receiving satisfactory purity tests, the developer/contractor will notify the public works inspector to schedule the removal of the double check assembly and the final connection by the Public Works Department.

Preparing the work site for work performed by the Public Works Department is the responsibility of the developer / contractor. The work site must meet all safety requirements outlined in these standards, including but not limited to shoring per Section 3-9.1 of these standards, traffic control, adequate overhead clearance, and other requirements as determined by the Public Works Department. City forces will not perform work until the site is in full compliance. If the site is not fully ready at the scheduled connection time, all costs for City forces to prepare, shore, or standby will be borne by the developer / contractor. If added safety measures are necessary as determined by the City, these costs shall be borne by the developer / contractor.

5-8.6 LOOPED MAINS

Unless otherwise approved by the Public Works Director or his designee, dead ending of a water main will not be permitted. All new mains must be looped to existing water mains. In the event it is necessary for the developer to obtain an easement for the City through private property to accomplish looping of the dead end, the easement shall meet the minimum requirements set forth in Sections 5-1 and 5-2 of these Standards.

5-8.7 LAYING HDPE MAINS

Lay HDPE in trench on an approved bedding so one co-extruded blue strip is at the twelve o’clock position.

Install tracer wire slightly and directly above crown of HDPE. Secure wire to pipe so that backfill operations do not significantly move the wire.

Run tracer wires up to top of main line valve box and terminate under the valve box lid.

Install potable water color coded warning tape one foot above the top of the pie.

Perform conductivity test in presence of City Inspector prior to City’s accepting the work.

5-9 SERVICE LINES

5-9.1 GENERAL

Service lines from the water main to the meter for all services 2 inches and smaller shall be copper in all non-residential applications and polyethylene tubing in residential applications. A number 10 copper trace wire is required for polyethylene pipe. All service lines 3 inches and larger shall be cement lined ductile iron pipe (Special Class 52) from the main to the meter.

All service connection piping within the public right-of-way shall be a minimum of 30 inches below the finish grade surface. For further details on services and hook-ups, see the series 500 Standard Drawings.

On services installed in conjunction with new water mains, it is required that the services be installed from the main to the permanent meter location and be subjected to purity and hydrostatic testing with the new water main as detailed in Sections 5-14 and 5-15.

5-9.2 MATERIALS

Copper tubing shall conform to the requirements of ASTM B88 (ANSI H33.1), Type K, annealed tubing. The tubing shall be coupled using flare-type compression fittings conforming to the requirements of AWWA C800, minimum 150 psi working pressure.

Polyethylene tubing shall only be permitted in residential applications and shall conform to the requirements of AWWA C901. The pipe shall bear the seal of the National Sanitation Foundation for potable water pipe. Pipe joints shall be made in accordance with the manufacturer's recommendations. Solvent welded pipe joints are not permitted. Pipe shall be per Standard Plan 502A, 502B or 502C of these standards.

Ductile iron pipe shall conform to the requirements shown in Section 5-6.2 of these Standards.

5-9.3 CONNECTIONS

Service connections on 4 inch ductile iron mains or larger shall be installed per Standard Drawings 502A, 502B and 502C.

No service connections may be installed on fire service mains or on fire hydrant laterals between the hydrant valve and the fire hydrant.

5-10 VALVES FOR WATER MAINS

5-10.1 GENERAL

All valves shall be inspected upon delivery in the field to ensure they are in proper working order before installation and they shall be free of all rust and dirt. They shall be set and jointed to the pipe in the manner as set forth in the AWWA Standards and the manufacturer’s recommendations for the type of connecting ends furnished. The valves shall also be carefully inspected for injury to the outer protective coatings.

A Valve Operating Nut Extension shall be installed when the ground surface is more than 36 inches above the valve operating nut. The Valve Operating Nut Extension shall be installed per Standard Drawing 504. When required, it shall be furnished and installed by the contractor.

At a minimum, valves shall be installed at all intersections, on each end of easements, and in line at maximum spacing of 600 feet.

5-10.2 AIR AND VACUUM RELEASE VALVES

Air and vacuum release valves must have prior approval from the Public Works Director or his designee before installation.

5-10.3 BUTTERFLY VALVES

Butterfly valves shall conform to AWWA C504, Class 150, with cast iron short body and "O" ring stem seal. Butterfly valves shall be used for all mains over 12 inches in diameter, except as noted in Section 5-10.5.

Butterfly valves in chambers shall have a manual crank operation.

Buried butterfly valves shall have a valve operating nut extension per Section 5-10.1 and as shown on Standard No. 504.

5-10.4 CHECK VALVES

Check valves for permanent installations other than cross connection control shall be rated for the source pressure, unless otherwise specified, and shall have adjustable tension lever and spring to provide non-slamming action under all conditions unless otherwise specified. For backflow prevention see Section 5-3.

5-10.5 GATE VALVES

Buried gate valves shall be ductile iron body, resilient wedge design, non-rising stem suitable for installation with the type and class of pipe being installed. Operating Stems are to be equipped with standard 2 inch operation nut and "O" ring stem seals. Valves must be of the type to have two "O" ring stem seals in the stuffing box of the valve to facilitate seal replacement without valve dismantling.

Gate valves shall only be used for mains 12 inches and smaller in diameter, all mains larger than 12 inches in diameter shall utilize butterfly valves, except as approved by the Public Works Division.

Valves not buried shall be specified on the developer’s plans and must be approved by the City Utility Department.

Two inch gate valves shall be heavy duty resilient wedge design and 2” operating nut. All gate valves shall be American Flow Control (old Waterous) Series 2500 or City approved equal.

5-10.6 VALVE BOXES

Valve boxes and valve operating nuts extensions shall be as specified in Standard Plan No. 504 and Section 5-10.1 of these Standards.

The valve and valve box shall be set plumb with the valve box centered on the operator nut. Valve boxes shall be set flush in pavement and gravel roads. Two (2) feet of asphalt concrete pavement is required around the valve box in gravel roads.

5-10.7 VALVE MARKER POSTS

Marker posts per Standard No. 510 shall be installed for all valves located in unimproved or unpaved areas not in City limits. Valve marker posts shall be set as directed by the City inspector in a safe and reasonable conspicuous location. The distance to the valve is to be neatly stenciled on the post with 2 inch numerals. Valve marker posts are not required for auxiliary hydrant valves.

5-11 HYDRANTS

5-11.1 GENERAL

Fire hydrants shall be installed in accordance with Standard Plan No. 507, at locations as shown on the approved plans.

Hydrants shall be the "Traffic Model" type with approved breakaway features. All hydrants shall be brass to brass subseat, minimum valve opening of 5-1/4 inches "O" ring stem seal, 6 inch mechanical or flange

shoe connection, 1-1/4 inch pentagonal operating nut. Approved models are listed on Standard Drawing No. 507.

All hydrants shall have a minimum of two (2) 2-1/2 inch ports with National Standard Threads and one (1) 4-1/2 inch National Standard Thread pumper connection.

All hydrants shall have a 5 inch Stortz metal face adapter x female hydrant thread with cap. The adapter shall be aluminum alloy (6061-T6 minimum) forged or extruded and shall have a hard coat anodized finish to mil-A-8625c. The Stortz adapter shall be specified to meet a 500 psi test and permanently attached in accordance with 5-11.2 and 5-11.3.

5-11.2 ADAPTER REQUIREMENTS

A. Overall diameter not to exceed 7-3/4 inches.
B. Overall length not to exceed 4-1/4 inches.
C. To be supplied with two holes, 1/4-20 nc, drilled and tapped with set screws, 180 degrees apart through female thread, to lock adapter to hydrant.
D. To be supplied with any required sealant and/or gasket.
E. Two sets of installation tools.

5-11.3 CAP REQUIREMENTS

A. One seal to be nitrile/vinyl rubber, suction style for zero leakage, color to be gray.
B. One-eighth inch vinyl covered aircraft cable, 18 inches minimum length to be attached to cap and adapter.
C. Force to connect or disconnect to be a minimum of 18 ft/lbs, maximum of 30 ft/lbs.
D. Outside diameter (not to exceed) 7-3/4 inches, overall length (not to exceed) 2 inches.

All hook-ups to fire hydrants for temporary water for whatever purpose shall be approved by the City Utility Department and will require a Hydrant Use Permit.

Hydrants installed in unpaved areas shall have a 4 inch thick, 3 feet square concrete pad poured around them per Standard No. 509.

5-11.4 HYDRANT GUARD POSTS

Hydrant guard posts, when required, shall be installed per Standard No. 510.

5-12 PRESSURE REDUCING STATIONS

When pressure reducing stations are required or needed, all pipe, fittings, and equipment shall be supported and restrained against static and dynamic loading in accordance with the equipment manufacturers' recommendations and as approved by the Public Works Director or his designee. Drain lines from pumps or other equipment shall be piped to a below grade drainage system connected to the station sump or drain. All drains shall utilize either an air gap or approved backflow prevention assembly to eliminate potential contamination.

5-13 THRUST RESTRAINT

All bends, tees and fittings shall be restrained. Mechanical joint restraint systems shall be used for thrust restraint unless otherwise noted in this section.

Restraint length shall be calculated in accordance with AWWA and the latest edition of Thrust Restraint Design for Ductile Iron Pipe published by the Ductile Iron Pipe Research Association (DIPRA).

Calculations shall be prepared by an engineer licensed in the State of Washington and shall use the following parameters:

- Safety Factor: 1.5
- Trench Type: See Section 5-7.4 of these Standards.
- Depth of Bury: See Section 5-7.3 of these Standards.
- Test Pressure: See Section 5-14 of these Standards.

Restraint length calculations must be submitted with the water plans. These calculations must identify each variable and equation used including pipe material, design pressure, safety factor, soil type, trench type, and depth of bury.

Computer software programs for thrust restraint design that utilize the same engineering principles, criteria, and analytical approach as the DIPRA design requirements may be used (i.e. software by DIPRA, EBAA Iron Sales, etc). When computer software programs are used for calculations, a print out showing the name and publisher of the program, the calculations from where the restrained length is derived as well as the criteria used must be submitted for review with the water plans.

Thrust restraint for horizontal bends may be calculated based on the above criteria. Alternatively, the values listed in Table 5A may be used.

Table 5A

Horizontal Thrust Restraint Length

Fitting	Pipe Diameter		
	6”	8”	12”
	Length to be Restrained in Each Direction		
11-1/4º bend	5’	5’	10’
22-1/2º bend	10’	10’	15’
45º bend	15’	20’	25’
90º bend	35’	45’	60’
Tees (where all legs can be restrained)	20’	25’	55’
Dead Ends and Tees (where only one branch is installed)	60’	80’	115’

Concrete thrust blocks and gravity blocks may only be used where thrust restraint cannot be achieved by mechanical means. All thrust blocking must be designed by an engineer licensed in the State of Washington and shall be calculated in accordance with AWWA and the latest edition of Thrust Restraint Design for Ductile Iron Pipe published by the Ductile Iron Pipe Research Association (DIPRA). Blocking shall be commercial concrete mix poured in place. Thrust blocking calculations must be submitted with the water plans for review and approval by the Public Works Director or his designee.

5-14 HYDROSTATIC PRESSURE TEST

All water mains and appurtenances shall be hydrostatically tested as specified in Section 7-09.3(23) of the WSDOT/APWA Standard Specifications. A copy of this test procedure is included in the back of this Section. Information on the operating pressure to be used when determining the test pressure can be obtained from the Public Works Department.

The contractor shall provide all necessary equipment and shall perform all work connected with the tests. The contractor shall perform the test to assure that the equipment to be used for the test is adequate and in good operating condition and all air has been released prior to requesting the city inspector to witness the test. If the initial test is not successful for any reason, additional trips required for City staff to witness or perform subsequent tests shall be at the developer's expense.

5-15 DISINFECTION OF WATER MAINS

Water mains shall be hydrostatically tested as specified in section 5-14 before disinfection can take place.

Before being placed in service, all newly installed pipe shall be flushed and disinfected with a chlorine solution and satisfactory coliform bacteria test report(s) obtained.

Disinfection of water mains shall be performed in accordance with AWWA Standard C651-05 and these Standards.

5-15.1 FLUSHING

Sections of pipe to be disinfected shall first be flushed to remove any solids or contaminated material that may have become lodged in the pipe. If no hydrant is installed at the end of the main, then a tap sufficient to provide a flush velocity inside the main of at least 2.5 fps shall be provided. At a minimum, the flush shall discharge one entire pipe volume of water from the new main. Flushing shall continue as long as material or color is visible in the discharge.

Guidelines for Required Flow and Openings to Flush Pipelines
(Assumes 40 psi residual pressure in water main)

Pipe Diameter (in)	Flow Required to Produce 2.5 fps (approx.) Velocity in Main (gpm)	Size of Tap (in)			Number of 2-½ in Hydrant Outlets	Maximum Length of Supply Hose (ft)
		1 in	1 ½ in	2 in		
4	100	1			1	500
6	200		1		1	100
8	400		2	1	2	100
10	600		3	2	2	100
12	900			2	2 (3" Dia. Hose)	100

Guidelines for Water Main Volume

Inside Diameter (in)	Volume per 100 LF (gal)
4	65
6	147

8	261
10	408
12	587
20	1,632

Alternate hose diameters and lengths can be used for flushing if calculations supporting their use are prepared by an engineer and approved by the Public Works Director or his designee.

Taps and other appurtenances required by the contractor for temporary release of air, chlorination, or flushing purposes shall be provided by the contractor as a part of the construction of water mains.

To protect aquatic life in receiving waters, the contractor shall be responsible for disposal of all chlorinated water flushed from mains and shall neutralize the chlorine contained in the wastewater before disposal into any natural drainage channel (or feature draining to a natural channel). The contractor shall be responsible for disposing of disinfecting solutions to the satisfaction of the Public Works Department and the Washington Department of Ecology. If approved by the Public Works Director or his designee, disposal may be made to any available sanitary sewer, provided the rate of disposal will not overload the sewer.

When flushing following the repair of a main break, and the main segment containing the repaired section cannot be hydraulically isolated to the nearest hydrant, the Contractor shall install a 2-inch tap and gate valve at the repaired section to provide for proper flushing.

5-15.2 DISINFECTANT CONCENTRATION AND RETENTION PERIOD (CONTACT INTERVAL)

Before being placed into service, all new mains and repaired portions of, or extensions to, existing mains shall be disinfected so that a free chlorine residual of not less than 10 mg/1 remains in the disinfectant solution after standing 24 hours in the pipe. The initial free- chlorine residual concentration of disinfectant solution shall be not less than 25 mg/l. Disinfectant chlorine solution contact time may be reduced from 24 to 12 hours if an initial disinfectant concentration of 50 mg/L is used. Disinfectant concentrations greater than 50 mg/L shall not be used. The ending concentration of an initial 50 mg/L solution following a 12 hour contact time shall also be not less than 10 mg/L.

The amounts of chlorine (Cl_2) required to provide 25mg/1 for 100-foot lengths of various diameter of pipe are:

AMOUNTS OF CHLORINE REQUIRED FOR 25 MG/L DOSAGE

Pipe Size (inches)	Volume of Water Per 100 ft length (gallons)	Household Bleach 6% (gallons)	Commercial Bleach 12-1/2% (gallons)
4	65.3	.03	.013
6	146.5	.06	.03
8	261.0	.11	.053
10	408.0	.17	.08
12	588.7	.25	.12
14	799.6	.33	.16
16	1044.4	.44	.21
20	1631.9	.68	.33

24	2349.9	.98	.47
30	3671.7	1.5	.75
36	5287.3	2.2	1.1
42	7196.6	3.0	1.44
48	9399.6	3.9	1.6

5-15.3 FORM OF APPLIED CHLORINE

Disinfection of water mains shall only be performed using the continuous feed method employing liquid hypochlorite solutions (liquid calcium hypochlorite or liquid sodium hypochlorite). Dry calcium hypochlorite shall not be used. Gaseous chlorine (also known as liquid chlorine) shall not be used.

Except for Everett's prohibition on the use of dry calcium hypochlorite or gaseous chlorine, disinfection shall follow the continuous feed methods specified in the most recent version of AWWA Standard C-651 and these Standards.

5-15.4 POINT OF APPLICATION

The preferred point of application of the disinfectant solution is at the beginning of the pipeline extension or any valved section of it. The water injector for delivering the chlorine disinfectant solution into the pipe shall be supplied from a tap on the pressure (upstream) side of the valve controlling the flow into the pipeline extension, but downstream of the backflow preventer used to isolate the new main from the existing water distribution system. Alternate points of applications may be used when approved in writing by the Public Works Director or his designee.

If the Public Works Department has allowed a direct tie-in to an existing main via an in-line backflow preventer, the point of application may be through a corporation stop inserted in the horizontal axis of the pipe with the approval of the Public Works Director or his designee. The tap must be located within ten feet of the point where the line is tied into the existing system. The internal surfaces of any backflow preventer and any adjacent downstream appurtenances (valves or couplings) shall be swabbed with straight hypochlorite solution prior to installation.

5-15.5 PREVENTING REVERSE FLOW

No connections shall be made between the existing distribution system and pipelines that are constructed by the developer that have not been flushed, disinfected, and tested, without a State Department of Health approved backflow preventer installed in the connecting line. All backflow preventers shall be installed upstream of all temporary fill hoses and disinfectant injection equipment.

5-15.6 CHLORINATING VALVES, HYDRANTS, AND APPURTENANCES

During the disinfectant contact interval for newly-laid pipe, all valves, hydrants, and other appurtenances shall be operated while the pipeline is filled with the disinfectant chlorine solution and while the main is under normal operating pressure (normal operating pressure is defined as the pressure that can be provided by the temporary backflow protected supply from the existing distribution system).

5-15.7 CHLORINATING CONNECTIONS TO EXISTING WATER MAINS AND WATER SERVICE CONNECTIONS

The chlorinating procedure to be followed shall be as specified in Section 4.6 (Final Connections to Existing Mains), 4.7 (Disinfectant Procedures When Cutting Into or Repairing Existing Mains), and 4.8 (Special Procedures for Caulked Tapping Tees) of the most recent version of AWWA Standard C651. The internal surfaces of all closure fittings shall be swabbed with a concentrated chlorine solution at least as strong as liquid household sodium hypochlorite bleach (5-6% Cl).

5-15.8 FINAL FLUSHING AND TESTING

The contractor shall notify the Public Works Department at least 48 hours prior to requiring City staff to collect samples and measure the chlorine concentration of the disinfectant solution placed in the new main. Samples will be collected and measured at the start and at the end of the disinfectant contact period.

Disinfectant concentration samples will be collected from both ends of a new main, at the end(s) of each cross or branch if any, and every 1200 feet along the main.

The contractor shall notify the Public Works Department at least 48 hours prior to requiring collection of final purity (coliform bacteria and free chlorine residual) samples by City staff.

At least one set of purity samples shall be collected from every 1,200 ft of the new water main, plus one set from the end of the line and at least one set from the end of each branch. Samples from the main and branch ends shall not be collected more than 10 ft from each end of the pipe.
Before placing the lines into service, a satisfactory bacteriological analysis sample report for samples collected from representative points in the new system shall be received from the laboratory. Only laboratories certified by the Washington State Department of Health, Drinking Water Division will be employed to analyze bacteriological purity samples. The City Utilties Department will collect bacteriological and disinfectant residual samples and will also obtain analysis of the samples.

Following chlorine disinfection, all disinfectant solution shall be flushed from the newly-laid pipe until the replacement water throughout its length shows, upon test, a level of free chlorine residual representative of the supply water from the distribution system.

5-15.9 SAMPLE COLLECTION TAPS

The contractor shall construct water sample collection taps at each required sampling location. The end of each water sample collection tap shall be located above ground level (not in holes, under plates, or other inaccessible locations). Taps shall be plumbed to provide downward water flow adequate to effective filling of sample containers. Public Works Department staff shall have the authority to refuse to conduct monitoring (sampling) for main purity from taps which they consider inadequate or not representative of water main quality.

On mains requiring sample collection from locations between the ends, the contractor shall provide for sample collection by installing water services specified in the plans, or if none are specified, at appropriate locations, by installing water service corporation stops and services at the appropriate locations along the main.

Service taps installed to provide mid-line sample collection locations that will not provide service to a customer shall be plumbed into dead-end meter setters and meter boxes at the street or sidewalk edge for use as future dedicated sampling locations. Meter setters provided for this purpose shall be of the type with stop valves located on both sides of the setter piping.

A sample tap shall be located ahead (upstream) of the flushing hose connection for sanitary and disinfectant residual sampling. Due to sanitary and representative sampling issues, no hose or fire hydrant (other than the temporary fill hydrant) shall be used in the collection of free chlorine or bacteriological samples.

5-15.10 REPETITION OF FLUSHING AND TESTING

Should the initial disinfection procedure result in an unsatisfactory bacteriological test (total coliform bacteria present), the entire flushing and disinfection procedure shall be repeated by the Contractor until satisfactory results are obtained. Failure to get a satisfactory test shall be considered as failure of the contractor to keep the pipe, sample taps, and temporary filling attachments clean during construction, or to properly flush and disinfect the main.

5-16 UNDERGROUND UTILITIES

Activities such a trench excavation, tunneling or boring, pipe embedment, backfilling, compaction, safety and pavement patching, whether for public or private utilities, shall conform to the requirements set forth in this Section and other Sections of these standards. For all the above, except pavement patching, see Section 3-9 Underground Utilities and Standard Plan Nos. 610, 611 and 615. For pavement patching see Section 3-14 and Standard Plan 316.

5-17 WATER SERVICES FOR FIRE PROTECTION

All fire protection systems must meet all building codes and fire codes. All fire systems must have a State approved double check valve assembly. These assemblies may be installed inside the building with Public Works Director or his designee approval and must meet Section 5-3 of these Standards.

Fire services 4” and larger must be a Double Check Detector Valve Assembly per City Standard 515 or 523.

The backflow prevention system must be installed downstream of the fire meter and upstream of any device (post indicator valve, fire department connection, etc.).

Backflow prevention systems must be installed within 70 ft. of the water main unless otherwise approved by the Public Works Director or his designee.

SECTION 6 - SANITARY SEWERS

6-1 GENERAL

Construction of all sanitary sewer mains, side sewers (laterals), and related facilities, including but not limited to sewer lift stations, telemetry facilities and appurtenances will be under the supervision of the City and shall be in compliance with all ordinances and current Standards of Everett.

Sewer main extensions will be required when the property does not front on a sewer main or when the existing sewer main is not adequate for the increased use proposed. The minimum extension shall be to a point at least 5 feet inside the prolongation of the property line.

All pipe installed shall be structurally sound for the design depth.

All requests for inspections and for witnessing tests shall be scheduled with the public works inspector 24 hours in advance. Failure to give adequate advance notice may result in delays to the contractor for required inspections.

6-2 ALIGNMENT TOLERANCE

The maximum tolerance from true line and grade shall be as follows:

A. Maximum deviation from established line and grade shall not be greater than 1/32 inch per inch of pipe diameter and not to exceed ½ inch per pipe length.

B. No adverse grade in any pipe length will be permitted.

C. The difference in deviation from established line and grade between two successive joints shall not exceed 1/3 of the amounts specified above.

6-3 CONSTRUCTION PLANS

The installation of all extensions to the sanitary sewer system shall be done per plans which have been approved by the City Engineer.

Sanitary sewer plans are to be separate from other utility plans, but all other utilities are to be shown, the with sanitary sewer portions highlighted.

Plans should be prepared on 24 inch by 36 inch plan/profile type sheets and shall show both plan and profile views. Other utilities are to be shown in profile view and in plan view.

The minimum allowable scale shall be 1 inch = 40 feet; on small projects, it shall be expected that the scale will be enlarged to adequately utilize the full plan sheet.

Provide notes on plans that refer to specific City Standards for such things as manholes, drop connections, side sewers, etc.

Plans shall show invert elevations of the main at the outlet and all inlets of each manhole, slope of the main and surface elevations of the manhole lid. In the profile view, the finish ground elevation over the pipe shall be shown as well as crossings of other existing or proposed utilities. Stationing of side sewers from the downhill manhole is required.

In all cases where a line is to be placed in an easement, the easement is to be shown with measurement information to accurately lay it out prior to constructing the pipe line.

Upon completion of construction, the original of the plan shall be as-built by the developer and certified as as-built by him and turned into the Public Works Department with properly executed easement deeds as applicable for the project.

6-3.1 REQUIRED NOTES ON PLANS

The following standard notes are required on all Sanitary Sewer Plans:

A. All work and materials shall conform to the City of Everett Standards and WSDOT/APWA Standard Specifications.

B. No part of the sanitary sewer system shall be covered, concealed or put into use until it has been tested, inspected, and approved by the city inspector.

C. Approximate locations of existing utilities have been obtained from available records and are shown for convenience. The contractor shall be responsible for verification of locations and to avoid damage to any additional utilities not shown. If conflicts with existing utilities arise during construction, the contractor shall notify the public works inspector and any changes required shall be approved by the City Engineer prior to commencement of related construction on the project.

D. All sewer main extensions within the public right-of-way or in easements must be staked by survey for line and grade prior to starting construction.

6-4 EASEMENTS

All public sewer mains not in the public right-of-way shall be in easements granted to the City of Everett.

All public sewer main easements shall be a minimum of 20 feet wide, with the sewer main ideally being the center of the easement.

No permanent structures are allowed to be constructed in the easement area.

Vehicle access, as approved by the City Engineer, will be provided to all manholes.

All easements except for special circumstances shall be located to run within single lots rather than being split by a lot line.

Landscaping within sanitary sewer easements shall be restricted to low growing shrubs, grasses, beauty bark, etc.

6-5 LIFT (PUMP) STATIONS

All side sewers must gravity into the city's sanitary system. The city does not promote the construction of individual side sewer pumps or public service pump stations. The city will only consider this method if no area gravity system can be constructed. Private pressure lines are not permitted on public right-of-way. If no gravity system can be constructed and a nongravity system has been approved by the city, the private pressure lines must enter a manhole on private property and gravity into the public system with a standard side sewer connection. The minimum manhole size permitted for this application is 30 inch diameter installed with a locking lid frame and cover per Standard Plan No. 607.

Plan for lift stations must be approved by the Utilities division of Public Works. The following items are to be considered for each application:

A. Lift stations must be a wet well-dry well type.

B. Lift stations must be set up with auxiliary power, including automatic transfer switch.

C. Provisions for telemetry shall be required.

6-6 MANHOLES

6-6.1 DESCRIPTION

This work shall consist of constructing manholes in accordance with these Specifications, the Standard Plans and Section 7-05 of the WSDOT/APWA Standard Specifications. Where conflicts occur, these Specifications shall have precedence over Section 7-05 of the WSDOT/APWA Standard Specifications.

6-6.2 MATERIALS

Manholes shall be constructed of pre-cast units, in accordance with Standard Plan Nos., 605A, 605B and 605C. Any deviations from Standard Plans will be subject to a shop drawing submitted by the contractor and approved by the City Engineer.

Joints between manhole elements shall be rubber gasket.

All pre-cast concrete shall be Class 4000. Manhole channels shall be Class 3000 concrete. Concrete blocks or concrete (masonry) rings may be used for adjustment of the casting to final street grade.

Standard precast cones shall provide reduction from 48 inches to 24 inches with height of not less than 18 inches and 54 to 24 inches with height of not less than 24 inches.

Standard flat slab covers shall be a minimum of 8 inches thick and shall conform to the outer dimension of the standard sections upon which they are to be placed.

6-6.3 CONSTRUCTION REQUIREMENTS

6-6.3(1) BEDDING

Unless otherwise directed by the City Engineer, manholes constructed with pre-cast base sections or cast-in-place sections shall be placed to grade upon a 6 inch minimum depth of Crushed Surfacing Base

Course meeting the requirements of Section 9-03.9(3) of the WSDOT/APWA Standard Specifications. The Crushed Surfacing Base Course shall be compacted to 95% maximum density.

6-6.3(2) JOINTS

Joints between pre-cast manhole elements shall be rubber gasketed in a manner similar to pipe joints conforming to ASTM C443. Shop drawings of the joint design shall be submitted to the City Engineer for approval, prior to manufacturer. Completed joints shall show no visible leakage and shall conform to the dimensional requirements of ASTM 478.

6-6.3(3) MANHOLE CHANNEL

All manholes shall be channeled unless otherwise approved by the City Engineer. Manhole channels shall be made to conform accurately to the sewer grade and shall be brought together smoothly with well rounded junctions. Channel sides shall be carried up vertically to the crown elevation of the various pipes, and the concrete shelf between channels shall be smoothly finished and warped evenly with slope to drain.

6-6.3(4) MANHOLE PIPE CONNECTIONS

All pipes except PVC pipe entering or leaving the manhole shall be provided with flexible joints within ½ of a pipe diameter or 12 inches, whichever is greater, from the outside face of the manhole structure and shall be placed on firmly compacted bedding, particularly within the area of the manhole excavation which normally is deeper than that of the sewer trench. Special care shall be taken to see that the openings through which pipes enter the manhole are completely and firmly rammed full of non-shrink grout to ensure water tightness (see Section 3-20(8) for non-shrink grout).

PVC pipe connected to manholes shall be provided with a manhole adaptor complete with gasket and approved by the City Engineer. No pipe joints in PVC shall be placed within 10 feet of the outside face of the manhole.

6-6.3(5) LADDER

All manholes over 3 feet in height shall be provided with a ladder or steps as specified in Standard Plan No. 606.

6-6.3(6) CONNECTIONS TO EXISTING MANHOLES

The contractor shall verify invert elevations prior to construction. The crown elevation of laterals shall be the same as the crown elevation of the incoming pipe unless specified. The existing base shall be reshaped to provide a channel equivalent to that specified for a new manhole.

Inside drops shall be used to connect to existing deep manholes. Outside drops will be allowed only where specifically allowed by the City Engineer.

The contractor shall excavate completely around the manhole to prevent unbalanced loading. The manhole shall be kept in operation at all times and the necessary precautions shall be taken to prevent debris or other material from entering the sewer, including a tight pipeline bypass through the existing channel if required.

The contractor shall core drill, line drill or wall saw an opening to match the size of pipe to be inserted. Where line drilling is the method used, the drilled holes must be interconnected. Line drilling shall be accomplished by the use of a small core drill or a rotary hammer. Jackhammer shall not be used. All openings must provide a minimum of 1 inch and a maximum of 2 inches clearance around the circumference of the pipe. Upstream pipes, except PVC pipe, penetrating the walls of manholes shall be placed with the bell facing out such that the bell is placed snug against the outside wall of the structure as the angle of penetration allows. Pipe, except PVC pipe, leaving or entering manholes shall be provided with a flexible joint within ½ of a pipe diameter, or 12 inches, whichever is greater. After pipes have been placed to their final position, they shall be grouted tight with non-shrink grout in a workmanlike manner. PVC pipe connecting to existing manhole shall be per Section 6-6.3(4).

6-6.3(7) SPACING

Maximum spacing of manholes shall be 400 feet, unless approved by the Utilities. All manholes are to be accessible to maintenance vehicles.

Manholes will be required at any change in pipe slope, alignment, or size. Manholes are not allowed in a fill section unless base is on a cut section. A manhole is required at the ends of all sewer mains.

6-7 SEWER MAIN

6-7.1 MATERIALS

Materials for sanitary sewer pipe shall meet the requirements of the following:

1. Plain Concrete Sewer Pipe: Plain concrete sanitary sewer pipe shall meet the requirements of ASTM C14 Class 3, unless otherwise approved.

2. Reinforced Concrete Sewer Pipe: Reinforced concrete sanitary sewer pipe shall conform to ASTM Designation C76 and shall be of the class specified or on the plans.

3. PVC Sewer Pipe: Polyvinyl Chloride (PVC) sanitary sewer pipe shall conform to the requirements of ASTM D3034 SD4 35.

4. Ductile Iron Sewer Pipe: Ductile iron sanitary sewer pipe shall conform to ANSI A 21.51 or AWWA C151 and shall be cement mortar lined, push-on joint or mechanical joint. The ductile iron pipe shall be Class 52, unless otherwise approved.

6-7.2 GENERAL

The maximum permissible trench width between the foundation level and to 12 inches above the pipe shall be 40 inches for pipe 15 inches or smaller inside diameter of 1 ½ times the inside diameter plus 18 inches for pipe 18 inches or larger (see Standard Plan No. 611). If the maximum trench width is exceeded without written authorization of the City Engineer, the contractor will be required to provide pipe of higher strength classification or to provide a higher class of bedding, as required by the City Engineer.

During excavation and installation of pipelines and placement of trench backfill, excavations shall be kept free of water. The contractor shall control surface run-off so as to prevent entry or collection of water in excavations. The static water level shall be drawn down a minimum of one foot below the bottom of the excavation so as to maintain the undisturbed state of the foundation soils and along the placement of any fill or backfill to the required density. The dewatering system shall be installed and operated so that the ground water level outside the excavation is not reduced to the extent that would damage or endanger adjacent structures or property.

6-7.3 UNDERGROUND UTILITIES

Activities such as trench excavation, tunneling or boring, pipe embankment, backfilling, compaction, safety and pavement patching, whether for public or private utilities, shall conform to the requirements set forth in other sections of these Standards. For all the above except pavement patching, see Section 3-9 Underground Utilities and Standard Plan Nos. 610, 611, and 615.

6-7.4 PIPE BEDDING

Bedding for all pipe shall be Crushed Surfacing Base Course (CSBC) meeting the requirements of Section 9-03.9(3) of the Standard Specifications for Road, Bridge, and Municipal Construction. Bedding will be to the pipe zone shown on Standard Drawing 611. The pipe zone is identified as 6 inches below the bottom of the pipe to 12 inches above the pipe. As an option the contractor may use controlled density fill as specified in Section 3-1 of these Specifications.

Bedding shall be placed in more than one lift. The first lift, to provide at least 6 inches thickness under and portion of the pipe, shall be placed before the pipe is installed and shall be spread smoothly so that the pipe is uniformly supported along the barred. Subsequent lifts of not more than 6 inches thickness shall be installed to the crown of the pipe and individually compacted to 90% density as determined by ASTM D698. A further 12 inch lift of moderately compacted material shall be placed over the crown of the pipe prior to the start of backfilling the trench.

6-7.5 LAYING SEWER PIPE

All sewer main installations shall have line and grade set prior to construction by survey, with a minimum of staking for each manhole with cuts to inverts of inlets and outlets. All mains are to be straight between manholes, unless specifically approved otherwise in writing by the City Engineer or shown as such on the approved plans.

The contractor may use any method such as “swede line and batter board” and “laser beam” etc., which would allow him to accurately transfer the control points provided by the surveyor in laying the pipe to the designated alignment and grade.

When using the “swede line and batter board” method, the contractor shall transfer line and grade into the ditch where they shall be carried by means of a taut grade line supported on firmly set batter boards at intervals of not more than 30 feet. Not less than three batter boards shall be in use at one time. Grades shall be constantly checked and in event the batter boards do not line up, the work shall be immediately stopped and the cause remedied before proceeding with the work.

When using a “laser beam” to set pipe alignment and grade, the contractor shall constantly check the position of laser beam from surface hubs provided by the surveyor to ensure the laser beam is still on alignment and grade. In the event the laser beam is found out of position, the contractor shall stop work and make necessary corrections to the laser beam equipment and pipe installed.

Clearances between sewer and water main pipe shall be a minimum of 10 feet.

6-7.6 PLUGS AND CONNECTIONS

All fittings shall be capped or plugged with a plug of an approved material gasketed with the same gasket material as the pipe unit; or shall be fitted with an approved mechanical stopper; or shall have an integrally cast knock-out plug. The plug shall be able to withstand all test pressures without leaking, and when later removed, shall permit continuation of piping with jointing similar to joints in the installed line.

6-7.7 JOINTING

Where it is necessary to break out or connect to an existing sewer during construction, only new pipe having the same inside diameter will be used in reconnecting the sewer. Where joints must be made between pipes with a mismatched wall thickness, the Contractor shall use flexible gasketed coupling, adaptor or coupling-adapter to make a watertight joint. Couplings shall be those manufactured by "Romac", "Smith Blair", or approved equal for reinforced pipes and "Fernco" or approved equal for non-reinforced pipes.

6-7.8 JACKING, AUGURING OR TUNNELING

See Section 3-9 Underground Utilities of these Specifications for Jacking, Auguring or Tunneling.

6-7.9 SIZE

The minimum pipe size for sanitary sewer mains shall be 8 inches in diameter. The Utility Superintendent shall determine the pipe size required to serve the surrounding area.

6-7.10 SLOPE

<u>8 inch Mains:</u>

A. 1% slope for the first two runs between manholes and a dead end line.

B. .75% slope when the line is not covered under condition "A" above.

C. Any slope less than condition "A" or "B" above must be approved by the Director of Public Works.

<u>10 inch Mains or Larger:</u>

The minimum slope shall be such as to provide a minimum flow velocity of 2 feet/sec. (full), providing there are at least 100 lots upstream.

6-7.11 SEPTIC TANKS

Septic systems are generally not allowed within the city. Grinder pump system should be used before septic tank systems. In areas of the city where it is determined by the City Engineer that conventional gravity or grinder pump sanitary sewer service is not available and/or not practical to be served by a public sewer system in the future, septic tank systems may be installed upon approval by the Utilities and issuance of a permit by the Snohomish County Health District.

6-7.12 PAVEMENT PATCHING

For pavement patching see Section 3-14 and Standard Plan 316 of these Standards.

6-7.13 CLEANING AND TESTING

All sanitary sewer pipe installations shall be tested in accordance with Section 7-17.3(4) of the WSDOT/APWA Standard Specifications for Road, Bridge, and Municipal Construction. A copy of this testing procedure is included at the end of this Section. Sewers and appurtenance shall be cleaned and

tested after backfilling by either the exfiltration or low pressure air method at the option of the contractor, except where the ground water table is such that the City Engineer may require the infiltration test.
The contractor/developer shall be required to clean and flush, with an approved cleaning ball and clean water, all gravity sanitary sewer lines prior to testing. The cleaning ball shall be an inflatable diagonally ribbed rubber ball of a size that will inflate to fit snugly into the pipe to be tested. A rope or chord will fastened to the ball to enable total control of the ball at all times.

6-8 SIDE SEWERS

6-8.1 DESCRIPTION

A side sewer is considered to be that portion of a sewer line that will be constructed between a main sewer line and a residence or other buildings in which the disposal of sanitary waste originates. It does not include any of the internal piping or connection appurtenances, the installation of which is controlled by a municipal code, ordinance or regulation.

The general requirements for construction of sewers in other Sections of these Specifications shall apply for construction of side sewers unless they are inconsistent with any of the provisions of this particular Section and the Specifications shall apply alike to all side sewers on public rights-of-way and private property.

6-8.2 MATERIALS

Materials shall meet the requirements of Section 6-7 of these Specifications.

All pipe shall be clearly marked with type, class, and/or thickness, as applicable. Lettering shall be legible and permanent under normal conditions of handling and storage.

Approved jointing shall be flexible gasketing.

Flexible gasketing shall be construed to include rubber, synthetic rubberlike and plastic materials specially manufactured for the joint, pipe size, and use intended and shall be furnished by the manufacturer of the pipe to be used.

6-8.3 GENERAL

Side sewer construction shall conform to Standard Plan Nos. 601, 602, and 604.

Side sewer locations shown on the drawings shall be subject to relocation in the field after construction starts. Regardless of the drawing location, the contractor shall place the tee or wye branch in the main sewer line at the location designated by the engineer.

A maximum of one residential unit or building will be allowed to connect to each side sewer. If the equivalent sewage flow from the building will be equal to more than 20 residential units, then a manhole will be required to be constructed at the connection to the sewer main.

Side sewers are not permitted to cross a public right-of-way or run parallel to the right-of-way centerline. All lots must front on a public sanitary system in order to be served.

Side sewers shall be replaced to the main at all new developments and remodels that require a sewer application unless otherwise approved by the Utility Superintendent.

6-8.4 EXCAVATION, BEDDING, BACKFILL AND COMPACTION

Excavation, bedding, backfill and compaction for side sewers shall conform to the requirements of Section 3.0 Underground Utilities and to Standard Drawings 611 and 615. The bedding material shall be Crushed Surfacing Base Course conforming to Section 9-03.9(3) of the WSDOT/APWA Standard Specifications and to Section 3-20.5 of these Standards.

6-8.5 SIZE

The minimum size requirement for that portion of any side sewer within any easement or public right-of-way is 6 inches in diameter.

On private property that portion of the side sewer may be reduced to 4 inches in diameter on single family homes, all other uses from duplexes to commercial must install 6 inch minimum in diameter piping to building connection.

6-8.6 SLOPE

The minimum slope for side sewers shall be 2%.

6-8.7 FITTINGS

All fittings shall be factory-produced and shall be designed for installation on the pipe to be used. Fittings shall be of the same quality and material as the pipe used, except when installing a PVC insert on existing pipe.

Side sewers shall be connected to the tee, wye, or riser provided in the public sewer where such is available, utilizing approved fittings or adapters. Where no tee, wye, or riser is provided or available, connection shall be made by core drilling and installing and approved tee. Tees shall be “Romac Industries, Style CG” or approved equal.

6-8.8 CLEANOUTS

All side sewers shall have a 6 inch clean-out at the property line per Standard Plan No. 604. The riser portion of the clean-out shall be PVC unless otherwise approved by the Utility Superintendent. For longer side sewer installations, extra clean-outs will be required at spacings not to exceed 100 feet.

6-8.9 TESTING

All side sewers shall be tested after backfill. Side sewers that are reconstructed or repaired to a length of 10 feet or more shall be tested for water tightness. Testing of newly reconstructed sections of side sewers consisting of a single length of pipe will not be required. Testing shall be performed in the presence of the engineer in accordance with Section 7-17.3(4) of the Standard Specifications for Road, Bridge and Municipal Construction. A copy of this testing procedure is at the end of this section.

When a new side sewer is installed, the entire length of new pipe installed shall be tested. In cases where a new tap is made on the main, the first joint of pipe off the main shall be installed with a test tee, so that an inflatable rubber ball can be inserted for sealing off the side sewer installation for testing. In cases where the side sewer stub is existing to the property line, the test ball may be inserted through the clean-out wye to test the new portion of the side sewer installation.

6-9 TELEVISION INSPECTION

All new mains within the public right-of-way and those in easements to be maintained by the city will be subject to a visual inspection with a TV camera unit by the City Sewer Division. Any deficiencies noted by the TV camera inspection shall be corrected to the satisfaction of the Utilities Division. The initial inspection costs are borne by the city. Follow-up reinspection after correction of any deficiencies is billed on a direct cost bases.

CITY OF EVERETT

Design and Construction Standards & Specifications For Development

Volume II

Standard Drawings

100 - GENERAL CONSIDERATIONS
200 - EROSION AND SEDIMENT CONTROL
300 - STREETS AND RELATED WORK
400 - STORM AND SURFACE WATER
500 - WATER DISTRIBUTION
600 - SANITARY SEWER
700 - TRAFFIC CONTROL
800 - ILLUMINATION & SIGNALIZATION
900 - TRANSIT

100 SERIES GENERAL CONSIDERATIONS

101 Sh 1 of 2 Sample Plot Plan

101 Sh 2 of 2 Residential Site Plan (Check list of required information)

200 SERIES EROSION AND SEDIMENT CONTROL

201	Typical Temporary Erosion Control
202	Sediment Trap Outlet
203	Sedimentation Pond Outlet
204	Anti-Vortex Device
205A	Temporary Silt Fence
205B	Silt Fence with Berm and Trench
206	Straw Bale Dam
207	Temporary Diversion and Perimeter Dike
208	Temporary Construction Entrance
209	Temporary Downdrain Structure
210A	Gradient Terrace
210B	Interceptor Ditch with Rock Check Dam
211	Catch Basin/Inlet Sedimentation Trap-Type “A”
212	Catch Basin/Inlet Sedimentation Trap-Type “B”
213	Catch Basin/Inlet Sedimentation Trap-Type “C”

300 SERIES STREETS AND RELATED WORK

300	Roadway Functional Classifications
301	Typical Roadway Section-Arterials
302	Typical Roadway Section-Local Access Streets
302A	Short Subdivision Easement Access Drive Section
302B	2 Lot Short Subdivision Easement Access Drive Section
303	Typical Roadway Section-Alley
304	Typical Cul-de-Sac
305A	Cement Concrete Curb and Gutter, Type “A-1”
305B	Cement Concrete Rolled Curb and Gutter
305C	Cement Concrete Curb-Type E-1, E-2, E-3, and E-4
305D	Extruded Asphalt Concrete Sections
305E	Extruded Cement Concrete Curb
306	Cement Concrete Sidewalk Details
306A	Cement Concrete Sidewalk at Corners
307	Cement Concrete Driveway Type-1
308	Cement Concrete Driveway Type-2
309	Cement Concrete Driveway Type-3
310A	Type A Curb Ramp
310B	Type B Curb Ramp
310C	Type C Curb Ramp
310D	Type D Curb Ramp
311	Typical Curb Ramp Locations
312	Monument Case and Cover
313	Survey Monument

300 SERIES EROSION AND SEDIMENT CONTROL

314	Survey Control Monument Cast-in Place
316	Pavement Patching Details
319	Residential Sidewalk Drain
320	Mailbox Structure Installation
320A	Mailbox Structure, For One or Two Boxes
321	NDCBU Mailbox Cluster
322	Typical Utility Locations
323	Temporary Turnarounds
324A	Rockery (Design & Construction Requirements)
324B	Rockery (Placement & Post Construction Limits)
325	Pedestrian Handrail
325A	Pedestrian Handrail Notes
326	Ornamental Handrail
327	Typical Roadway Section Special Interim Street
331	Cement Concrete Steps
332	Cement Concrete Stairway Construction Details
333	Typical Tree Planting
333A	Tree Well in Sidewalk Area
333B	Tree Well in Raised Traffic Island
334A	Typical Parking Layout
334B	Parking Lot Details

400 SERIES STORM AND SURFACE WATER

401	Precast Concrete Inlet (Sheets 1 & 2)
402	Catch Basin Type-A (Sheets 1 & 2)
403	Catch Basin Type-B (Sheets 1 & 2)
404	Catch Basin Type-2 (48”, 54”, 60”, 72”, 84”, & 96”) (Sheets 1 & 2)
405	Frame for Grate or Solid Cover (Sheets 1 & 2)
406A	Herring Bone Grate for Catch Basin or Inlet (Sheets 1 & 2)
406B	Solid Cover for Catch Basin or Inlet (Sheets 1 & 2)
406C	Vaned Grated for Catch Basin or Inlet
407	Typical Frame & Grate Installation
408	Open Curb Face Frame & Grate Installation
409	Open Curb Face Frame & Grate Details
410	Floatable Material Separator and/or Gas Trap (6” or 8” Lines)
411	Floatable Material Separator and/or Gas Trap (12” and Larger)
412A	Typical Restrictor Installation
412B	Typical Restrictor Assembly
412C	Lift Gate Assembly and Secondary Orifice Detail
416	Typical Closed Underground Detention System
417	Typical Dry Type Detention Pond
419	Biofiltration Swale (Grass)
420	Typical Wet Pond Layout
422A	Bypass Structure Type 1
422B	Bypass Structure Type 2
422C	Bypass Structure Type 3
422D	Bypass Structure Type 4
422E	Restrictor Structure

500 SERIES WATER DISTRIBUTION

502A	¾ Inch Metered Water Service
502B	2 Inch Metered Water Service
502C	1 Inch Metered Water Service
503A	Fire Service Compound Meter 4 Inch and Larger
503B	Compound Meter for 3 Inch and 4 Inch
503C	Compound Meter for 6 Inch
504	Valve Box and Extension
507	Fire Hydrant Assembly
509	Concrete Fire Hydrant Pad
510	Fire Hydrant Guard Post and Valve Marker Post
511	Blow Off Assembly
512	1-Inch Air-vacuum Valve Assembly
513	2-Inch Polyethylene Water Main
514	Tapping Tees
515	Double Check Detector Valve Assembly (DCDA) 3 Inches and Larger Services
516	Double Check Valve Assembly (DCVA) 3 Inches and Larger Services
517	Reduced Pressure Detector Assembly (RPDA) All Sizes
518	Reduced Pressure Backflow Assembly (RPBA) All Sizes
519	Air Gap for Makeup Tank
520	Double Check Valve Assembly (DCVA For 2 ½ Inches and Smaller Service
521	Typical PRV Installation
523	Double Check Detector Valve Assembly (DCVA) 3 Inch and Larger Service Inside a Building
524A	Residential Fire Sprinkler System Metering Requirements
524B	Typical Multipurpose Piping System Diagram for IRC Single Family, Duplex & Townhouse Structures
525	¾” Midpoint Sampling Tap
526	Sampling and Flushing Assemblies

600 SERIES SANITARY SEWER

601	Typical Side Sewer Layouts
602	Typical Side Sewer Connections
604	Sewer Clean-out
605A	Type 1 Manhole 48” and 54”
605B	Type 2 Manhole 72” and 96”
605C	Type 3 Manhole 48”, 54”, 60”, 72”, and 96”
606	Polypropylene Ladder
606A	Alternate Polypropylene Plastic Step
607	Manhole Ring and Cover
608	Outside Drop Manhole Connection
609	Inside Drop Manhole Connection
610	Typical Trench Section
611	Bedding for Pipe in Trenches
612	Typical Sewer Connection to Existing Sewer Mains
613	Alternate Sewer Connection to Existing/New Concrete Sewer Main
614	Casing Detail
615	Typical Trench Compaction
616	Grinder Pump Connection to Sanitary Sewer
617	Back-Water Valve Connection to Sanitary Sewer

700 SERIES TRAFFIC CONTROL

701A	Traffic Control Plan-2 Lane Roadway, One Lane Closed
701B	Traffic Control Plan-2 Lane Roadway, Partial Lane Closure
701C	Traffic Control Plan-Shoulder Work
701D	Traffic Control Plan-5 Lane Roadway, Right Lane Closed
701E	Traffic Control Plan-5 Lane Roadway, Left Turn Lane Closed
701F	Traffic Control Plan-Center of Intersection Work
701G	Traffic Control Plan-5 Lane Roadway, Left Lane Closed Far Side of Intersection
701H	Traffic Control Plan-5 Lane Roadway, Right Lane Closed Far Side of Intersection
701I	Traffic Control Plan-Full Street Closure
701J	Traffic Control Plan-5 Lane Roadway, Multi-lane Closure
701K	Traffic Control Plan-2 Way Left Turn Lane Closure
701L	Traffic Control Plan-5 Lane Roadway with Left Lane Closed
702	Traffic Control Devices
711	Construction Identification
712	Construction Identification Sign
713	Project Information Sign
715	Post Mounting Detail for Street Name Sign
716	Traffic Regulatory Sign Installation
717	Mast Arm Mounted Street Name Sign Type 1
717A	Mast Arm Mounted Street Name Sign Type 2
718	Post Mounted Street Sign
719	Pavement Marking Details
719A	Raised Pavement Marking Details
720	Paint Striping Details
721	Typical Stop Line and Crosswalk Layout
722	Left Turn Pocket Detail
723	Transit Stop Curb Striping

800 SERIES	**ILLUMINATION & SIGNALIZATION**
801	Service Cabinet for Traffic Signal and Street Illumination
801A	400 AMP Service Cabinet (Sheet 1 – Sheet 4)
801B	100 AMP Service Cabinet
801C	Service Cabinet for Metered Signal and Holiday Lighting
802	Typical Type 1 Stop Line Loop Detection Layout (6’x30’)
802A	Typical Type 3 Stop Line Loop Detection Layout (6’ D.A.)
803	Pole Mounted Terminal Cabinet
804	Luminaire Mounting Height and Utility Clearances
805A	Traffic Junction Box Details
805B	Traffic Junction Box Details
806A	Traffic Induction Loop Details
806B	Traffic Induction Loop Details
806C	Traffic Induction Loop Details
807	AC Power Panel Detail
809A	Street Light Foundation
809B	Street Light Location Alternates
810A	Aerial Telemetry Installation on Wood Pole-Dead End Mounting
810B	Aerial Telemetry Installation on Wood Pole-Cable Suspension Clamp
810C	Aerial Telemetry Installation on Wood Pole-Angle Point Mounting
811	Aerial Telemetry Junction Box
813	Police Panel Model 332 Cabinet
814	Detection Panel Model 332 Cabinet
815	Display Panel
816	332 Cabinet Layout
817	Signal Pole Foundation Type 2 and 3
818	Telemetry Cabinet & Foundation
819	Service Cabinet for Street Illumination
820	Conduit Riser Detail for PUD Service Drop
821	Decorative Light Foundation
822	Decorative Light
823	Model 332 Cabinet Foundation Detail
824	NEMA Type “P” Controller Cabinet Foundation Detail
825	Emergency Pre-Emption Beacon Mounting Detail (Type “PS” Pole)
826	Electrical Cabinet Foundation

900 SERIES TRANSIT

901	Bus Turnout Dimensions
902	Bus Stop Dimensions
904	Bus Shelter
905	Bus Turning Radii
906	Bus Shelter (Concrete Pad)

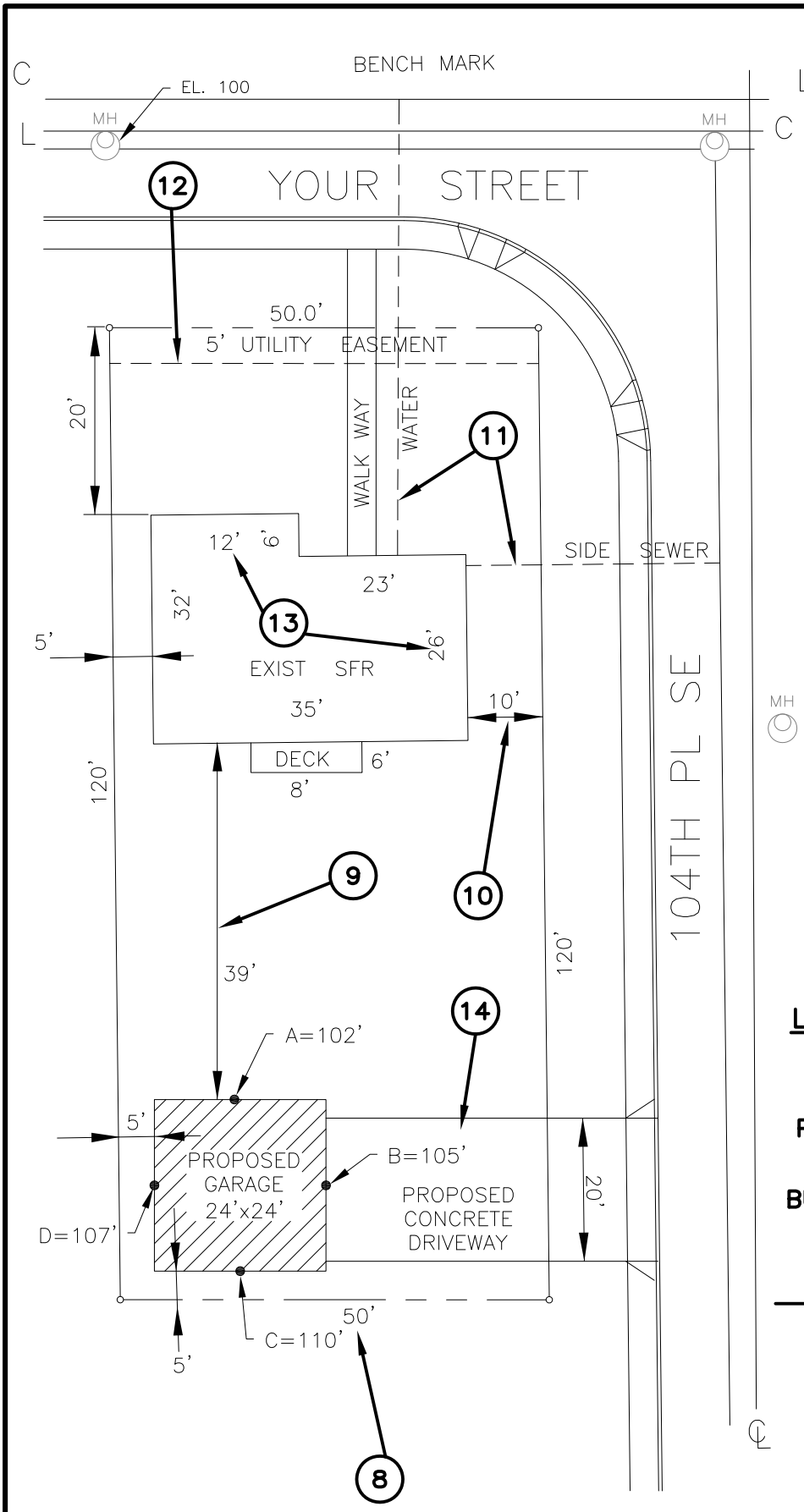

PROJECT DESCRIPTION:

PROPOSED GARAGE

J. HOMEOWNER
1234 YOUR STREET
EVERETT WA 98201

LEGAL DESCRIPTION

LOT #2 PLAT OF
PARADISE TRACTS DIV. NO. 2

PARCEL TAX I.D. #

00123400000100

HEIGHT CALCULATIONS

BENCH MARK

Manhole RIM ELEV = 100'

A = 102'
B = 105'
C = 110'
+ D = 107'

424 ÷ 4=106' AVERAGE (BASE ELEV.)
+ 15' ALLOWED
121'=MAX HEIGHT

LOT COVERAGE BY BUILDING:

LOT SIZE 6000

EXISTING HOUSE 902
PROPOSED GARAGE 576 S.F.
1558 S.F.

BUILD. SF ÷ LOT SF=26%

IMPERVIOUS AREA

EXISTING: 990
PROPOSED: 1176
TOTAL: 2166

N

SCALE: 1"=20'

CITY OF EVERETT
PUBLIC WORKS DEPARTMENT

RESIDENTIAL SITE PLAN CHECKLIST
SHEET 1 OF 2

2-13-2014
Date:

101
COE Std Dwg:

T:\ACad\eps-coe design & constr specs for development\CURRENT\std detail dwgs\Dwg Files\STD101.dwg, 2/21/2014 7:56:20 AM

THE FOLLOWING INFORMATION IS REQUIRED ON ALL SITE PLANS.

NOTE: A SURVEY MAY BE REQUIRED AT THE TIME OF BUILDING PERMIT SUBMITTAL IF DEVELOPMENT IS WITHIN ONE FOOT OF A REQUIRED SETBACK OR ONE FOOT OF A REQUIRED HEIGHT LIMIT.

- ☐ 1. PROJECT DESCRIPTION, NAME OF APPLICANT AND ADDRESS OF SITE.
- ☐ 2. LEGAL DESCRIPTION.
- ☐ 3. TAX PARCEL NUMBER.
- ☐ 4. HEIGHT CALCULATIONS WITH BENCHMARK, AVERAGE BASE ELEVATION AND ACTUAL HEIGHT NOTED.
- ☐ 5. PERCENT OF LOT COVERAGE BY BUILDING(S) TO INCLUDE TOTAL LOT SIZE (SQFT) AND FOOTPRINT OF ALL BUILDINGS.
- ☐ 6. CALCULATE IMPERVIOUS AREA SHOW EXISTING, PROPOSED AND TOTAL (SQUARE FEET). OVER 2,000 SF MAY BE REQUIRED TO SUBMIT STORMWATER ENGINEERED PLANS. SEE SUBMITTAL CHECKLIST FOR DETAILS.
- ☐ 7. NORTH ARROW (DIRECTION FACING UP) AND SCALE.
- ☐ 8. LENGTH OF ALL LOT LINES.
- ☐ 9. DISTANCE BETWEEN ALL BUILDINGS, EXISTING AND PROPOSED.
- ☐ 10. PROPOSED AND EXISTING BUILDING SETBACKS FROM ALL LOT LINES.
- ☐ 11. UTILITIES (SEWER, WATER & DRAINAGE).
- ☐ 12. EASEMENTS ON SITE INCLUDING, BUT NOT LIMITED TO, INGRESS/EGRESS, WATER, SEWER & DRAINAGE.
- ☐ 13. SHOW BUILDING DIMENSIONS.
- ☐ 14. ALL DIMENSIONS, LOCATION AND MATERIAL OF PROPOSED AND EXISTING DRIVEWAYS.
- ☐ 15. ANY CRITICAL AREAS ON SITE. SHOW TOP OF SLOPE AND TOE OF SLOPE. SHOW PROPOSED BUILDING SETBACKS FROM SLOPE AND ANY CRITICAL AREA BUFFERS.
- ☐ 16. DIMENSIONS AND DEPTH OF ANY FILL ON THE SITE (IF APPLICABLE).
- ☐ 17. ANY PROPOSED ROCKERIES AND RETAINING WALLS OVER 4'–0" TALL.

EVERETT **CITY OF EVERETT** **PUBLIC WORKS DEPARTMENT**	RESIDENTIAL SITE PLAN CHECKLIST SHEET 2 OF 2	2-13-2014 Date: 101 COE Std Dwg:

T:\ACad\eps-coe design & constr specs for development\CURRENT\std detail dwgs\Dwg Files\STD101.dwg, 2/21/2014 7:58:08 AM

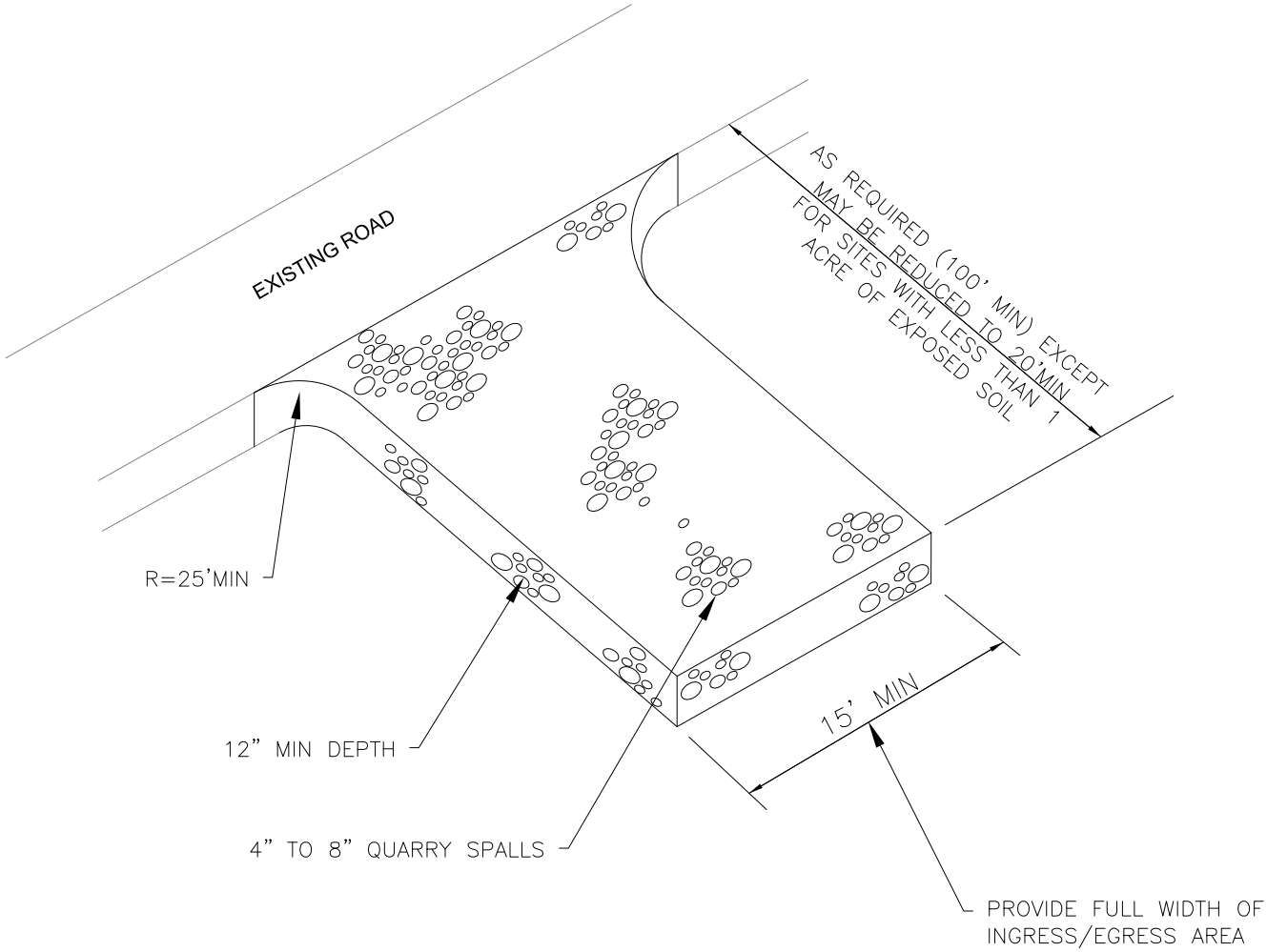

NOTE: GEOTEXTILE FABRIC MUST BE PLACED BENEATH QUARRY SPALLS.

CITY OF EVERETT
PUBLIC WORKS DEPARTMENT

CONSTRUCTION ENTRANCE ROCK PAD

5-11-2011
Date:

201
COE Std Dwg:

T:\ACad\eps-coe design & constr specs for development\CURRENT\std detail dwgs\Dwg Files\STD201.dwg, 2/21/2014 8:09:20 AM

BRING BLANKET/NETTING DOWN TO A LEVEL AREA BEFORE TERMINATING THE INSTALLATION. TURN THE END UNDER 6" AND STAPLE AT 12" INTERVALS.

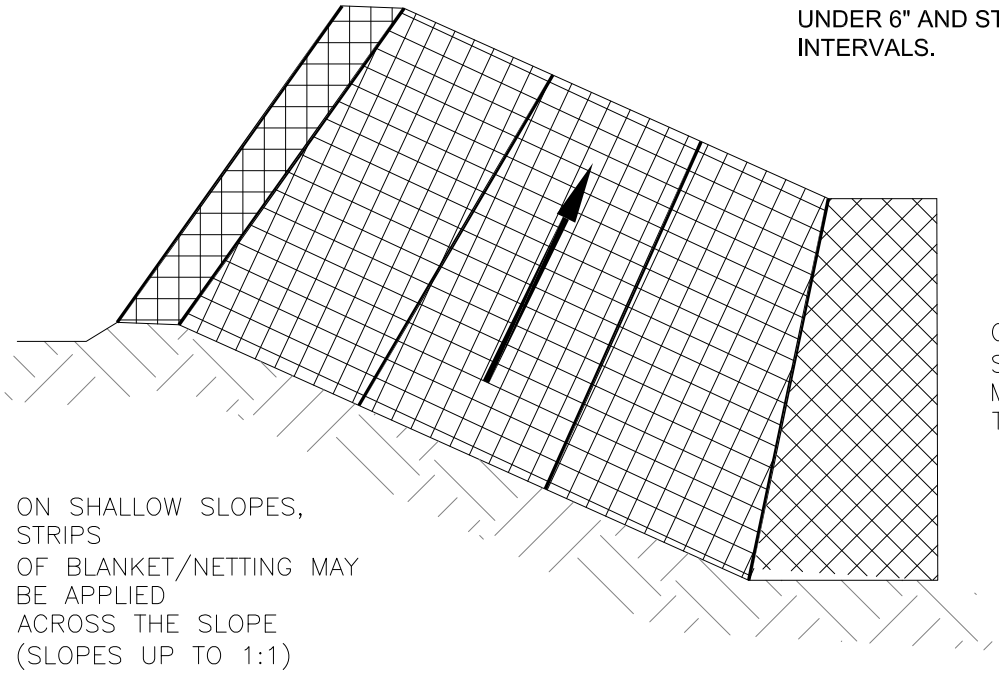

ON SHALLOW SLOPES, STRIPS OF BLANKED/NET MAY BE APPLIED ACROSS THE SLOPES UP TO 1:1

ON SHALLOW SLOPES, STRIPS OF BLANKET/NETTING MAY BE APPLIED ACROSS THE SLOPE (SLOPES UP TO 1:1)

SHALLOW SLOPE

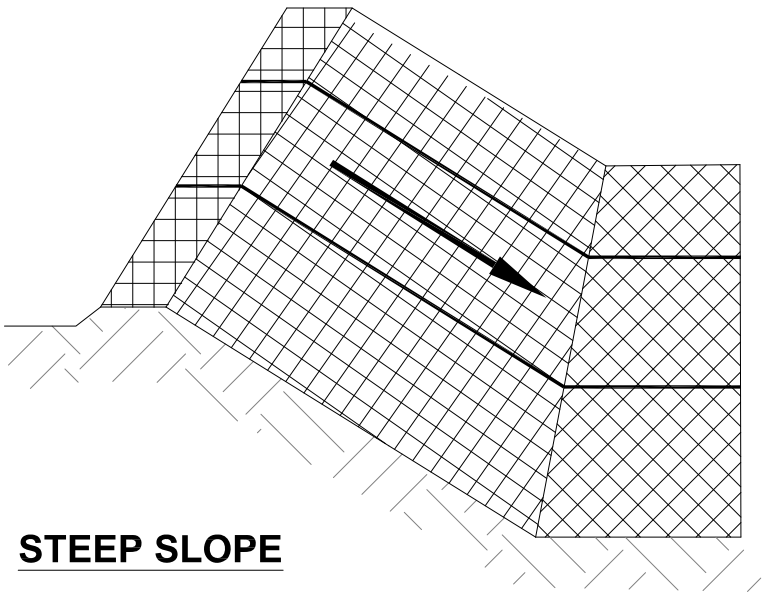

ON STEEP SLOPES, APPLY STRIPS OF BLANKET/NETTING PARALLEL TO THE DIRECTION OF FLOW AND ANCHOR SECURELY.

STEEP SLOPE

CITY OF EVERETT
PUBLIC WORKS DEPARTMENT

EROSION CONTROL BLANKETS

SHALLOW SLOPE & STEEP SLOPE
SH 1 OF 2

5/11/2011
Date:

202
COE Std Dwg:

T:\ACad\eps-coe design & constr specs for development\CURRENT\std detail dwgs\Dwg Files\STD202.dwg, 2/21/2014 8:11:14 AM

WHERE THERE IS A BERM AT THE TOP OF THE SLOPE, BRING THE BLANKET/NETTING OVER THE BERM AND ANCHOR IT BEHIND THE BERM LINE.

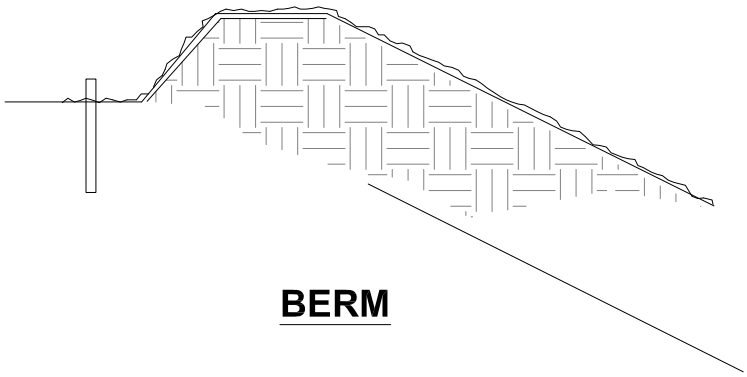

BERM

IN DITCHES, APPLY BLANKET/NETTING PARALLEL TO THE DIRECTION OF FLOW. USE CHECK SLOTS EVERY 15'. DO NOT JOIN STRIPS IN THE CENTER OF THE DITCH.

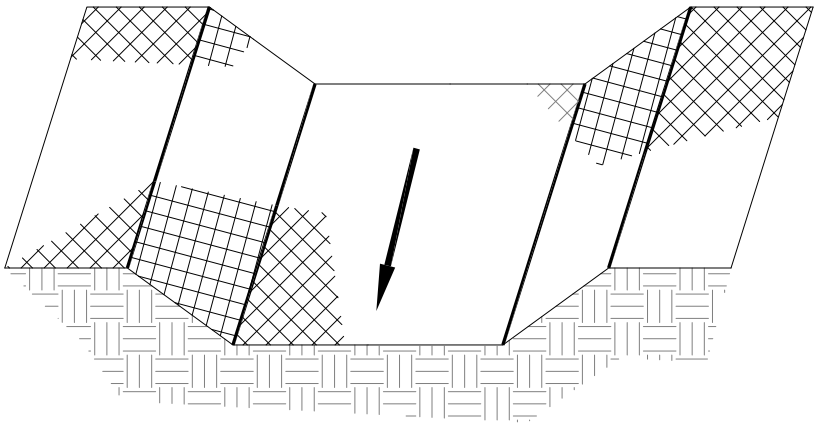

SHALLOW SLOPE

CITY OF EVERETT PUBLIC WORKS DEPARTMENT	EROSION CONTROL BLANKETS BERM & SHALLOW SLOPE SH 2 OF 2	5/11/2011 Date: 202 COE Std Dwg:

T:\ACad\eps-coe design & constr specs for development\CURRENT\std detail dwgs\Dwg Files\STD202.dwg, 2/21/2014 8:11:45 AM

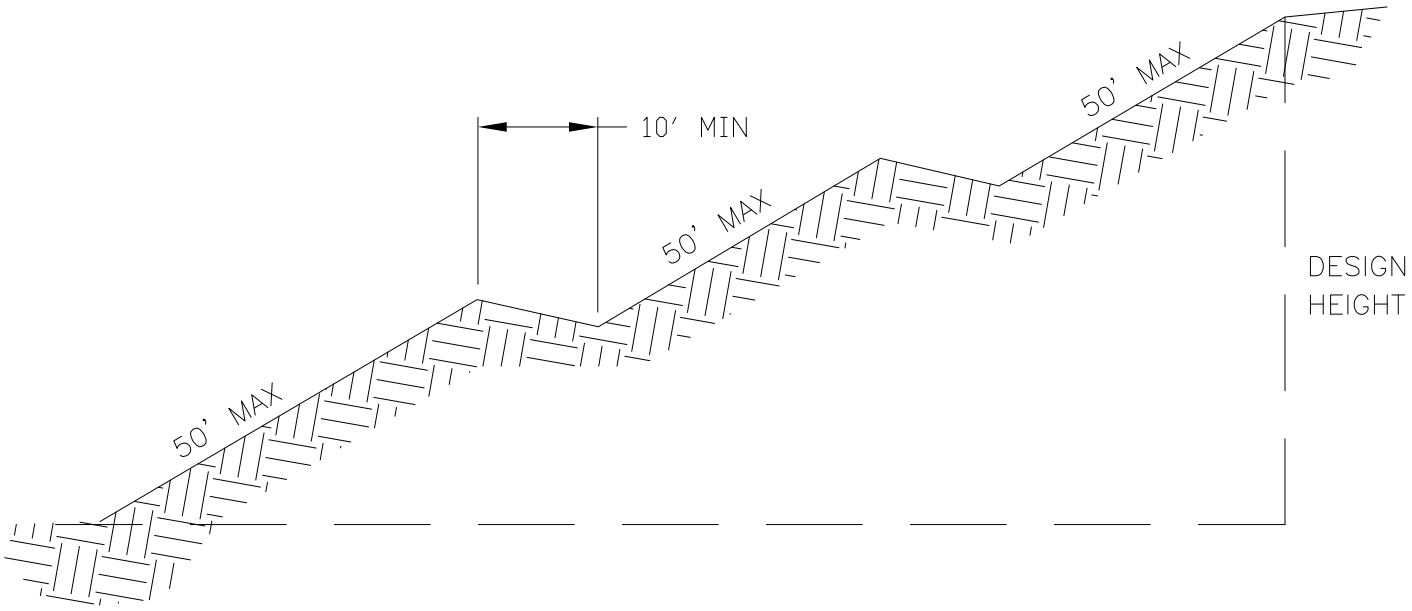

CITY OF EVERETT
PUBLIC WORKS DEPARTMENT

GRADIENT TERRACE

5/11/2011
Date:

203
COE Std Dwg:

T:\ACad\eps-coe design & constr specs for development\CURRENT\std detail dwgs\Dwg Files\STD203.dwg, 2/21/2014 8:13:04 AM

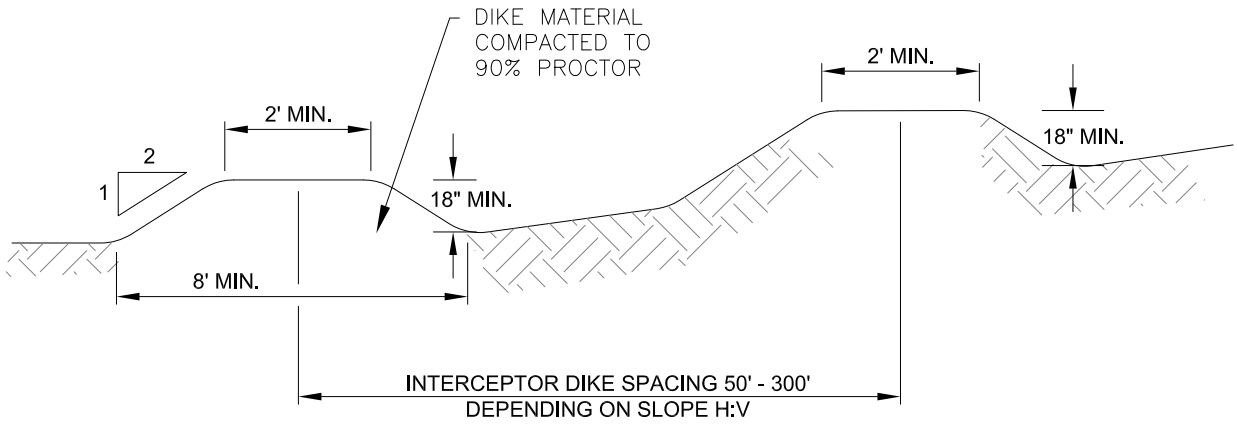

(A) INTERCEPTOR DIKES

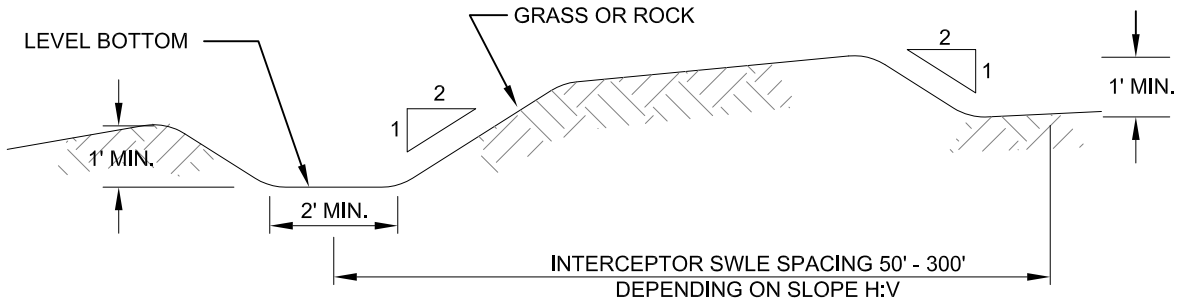

(B) INTERCEPTOR SWALE

CITY OF EVERETT
PUBLIC WORKS DEPARTMENT

TEMPORARY INTERCEPTOR
DIKES & SWALES

5/11/2011
Date:

204
COE Std Dwg:

T:\ACad\eps-coe design & constr specs for development\CURRENT\std detail dwgs\Dwg Files\STD204.dwg, 2/21/2014 8:13:57 AM

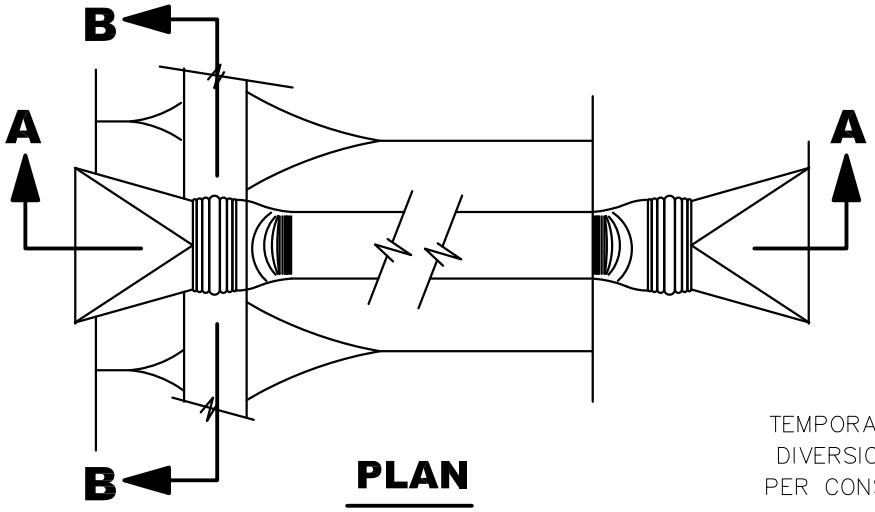

PLAN

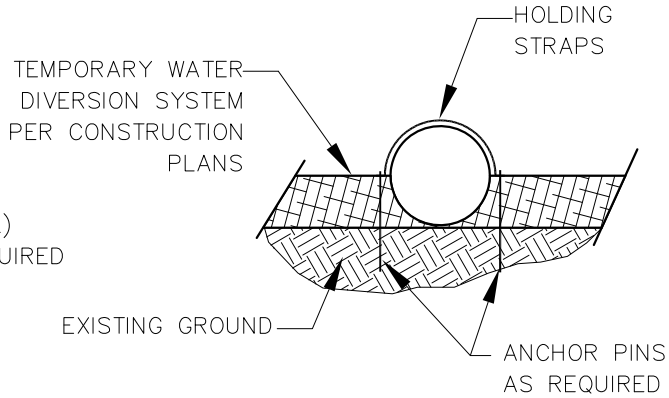

SECTION B-B

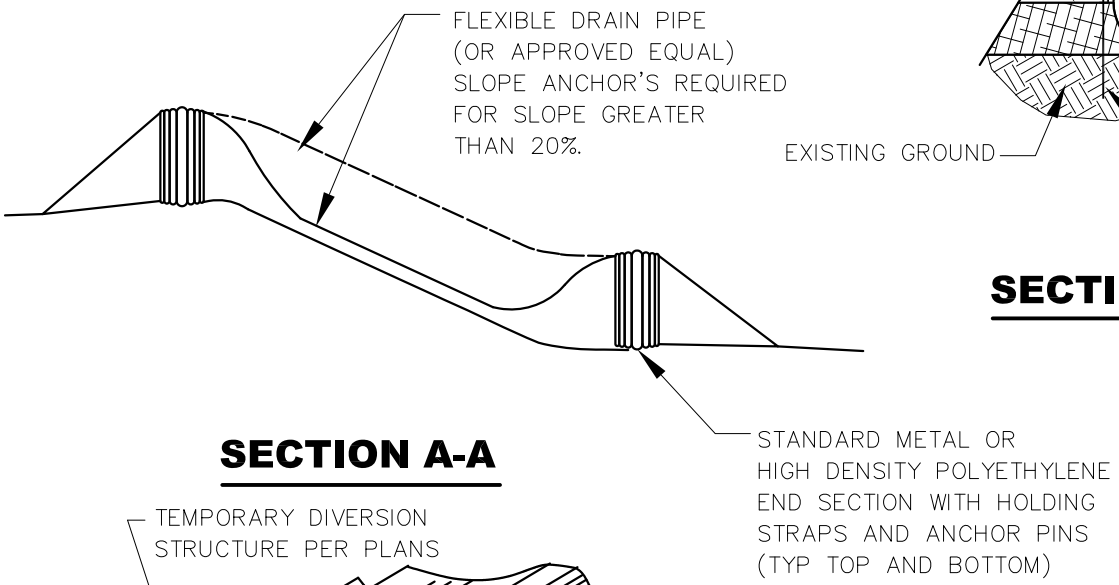

SECTION A-A

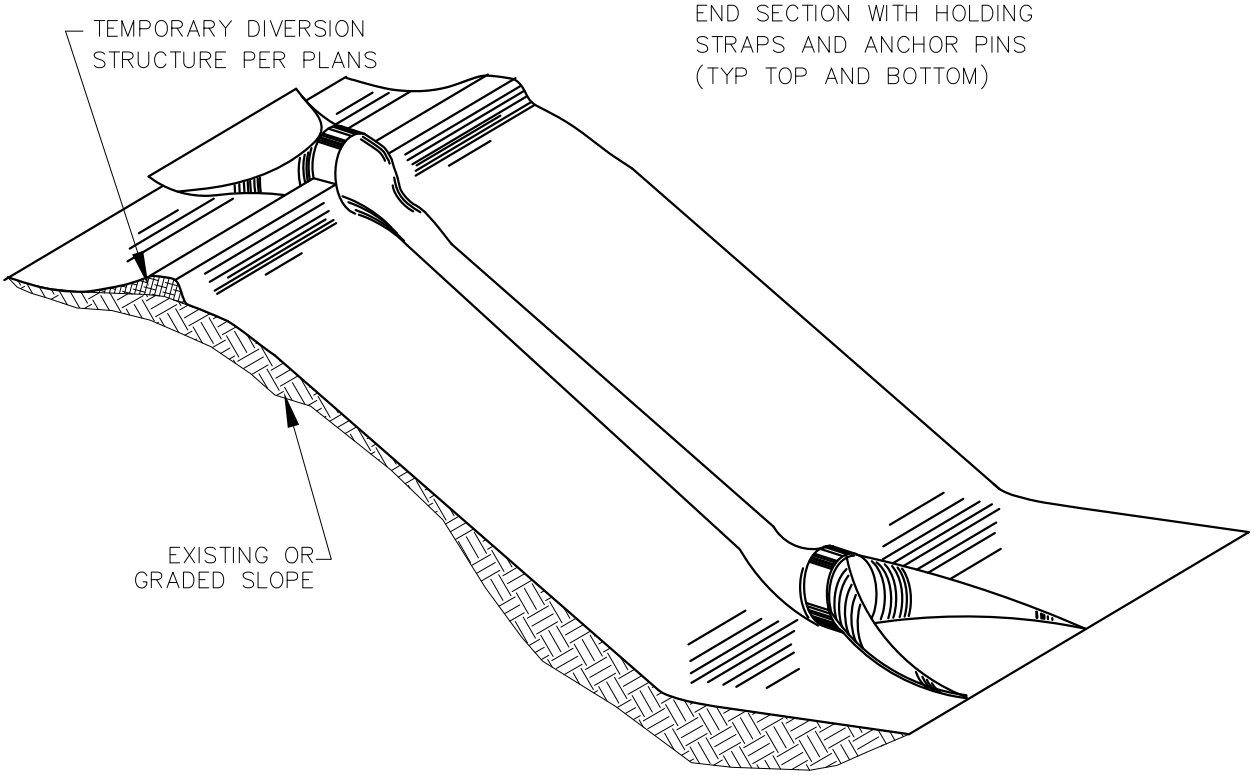

CITY OF EVERETT
PUBLIC WORKS DEPARTMENT

PIPE SLOPE DRAIN

5/11/2011
Date:

205
COE Std Dwg:

T:\ACad\eps-coe design & constr specs for development\CURRENT\std detail dwgs\Dwg Files\STD205.dwg, 2/21/2014 8:15:23 AM

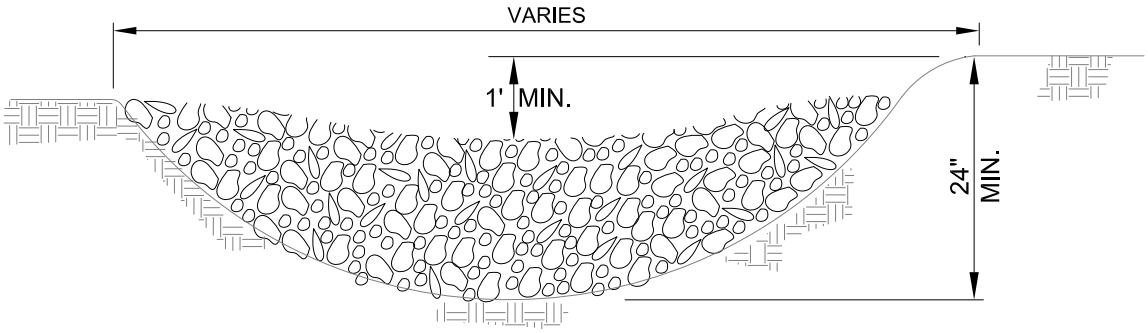

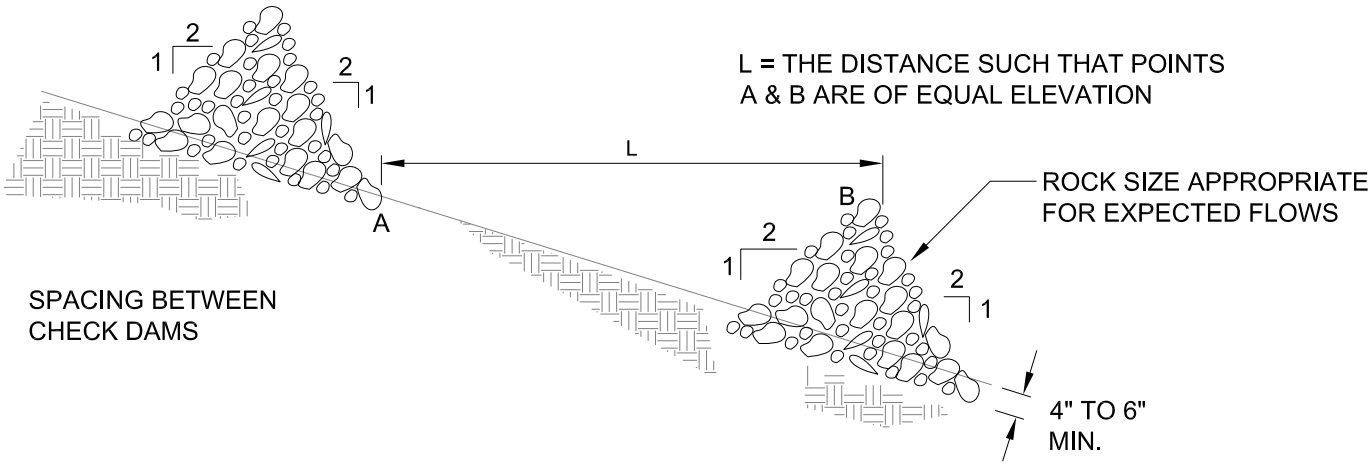

CITY OF EVERETT
PUBLIC WORKS DEPARTMENT

ROCK CHECK DAMS

5/11/2011
Date:

206
COE Std Dwg:

T:\ACad\eps-coe design & constr specs for development\CURRENT\std detail dwgs\Dwg Files\STD206.dwg, 2/21/2014 8:24:25 AM

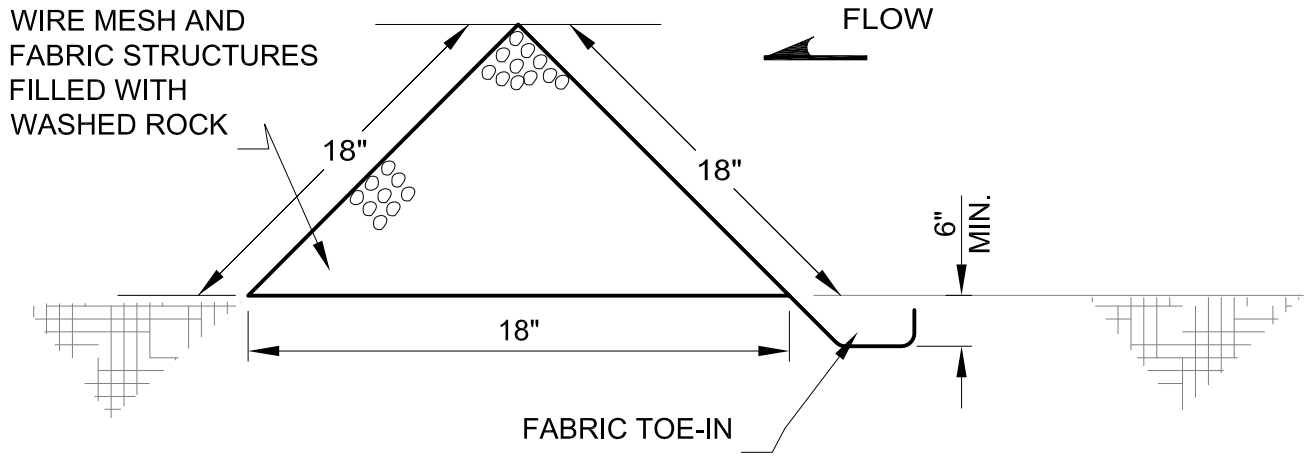

OPTION 1

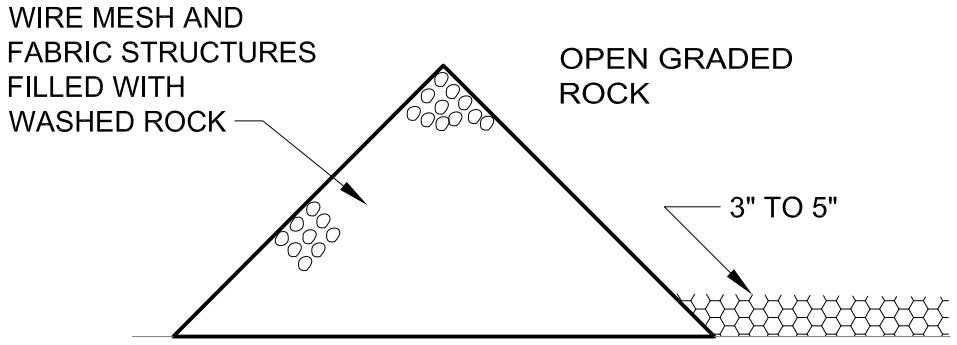

OPTION 2

INSTALLATION DETAIL OPTIONS

1) TOE-IN 6" MIN.
2) WEIGHTED WITH 3"-5" OPEN GRATED ROCK
3) TRENCHED IN 4"

CITY OF EVERETT PUBLIC WORKS DEPARTMENT	TRIANGULAR SEDIMENT FILTER DIKES OPTION 1 & 2 SHT 1 OF 2	5/11/2011 Date: 207 COE Std Dwg:

T:\ACad\eps-coe design & constr specs for development\CURRENT\std detail dwgs\Dwg Files\STD207.dwg, 2/21/2014 8:26:07 AM

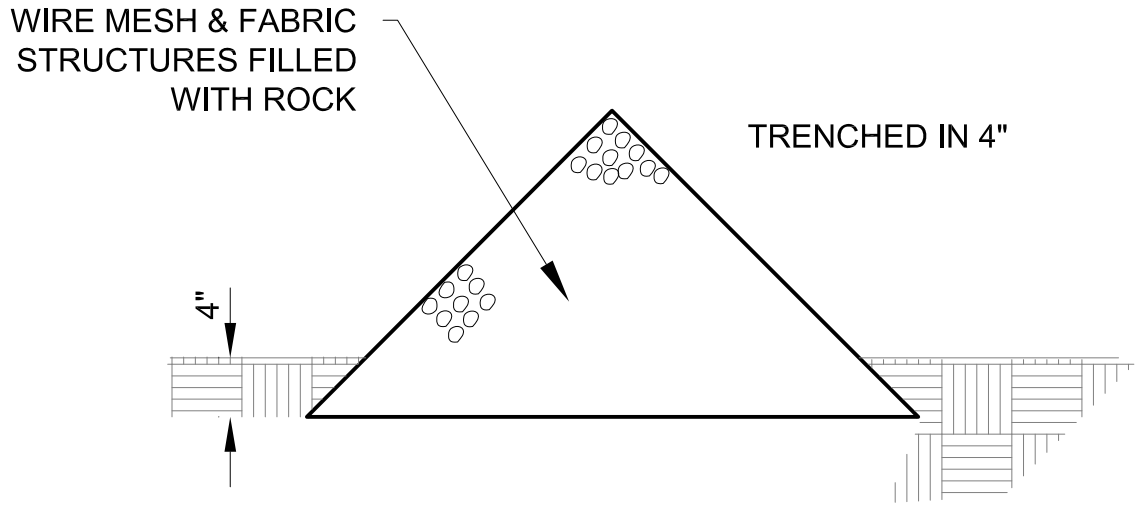

OPTION 3

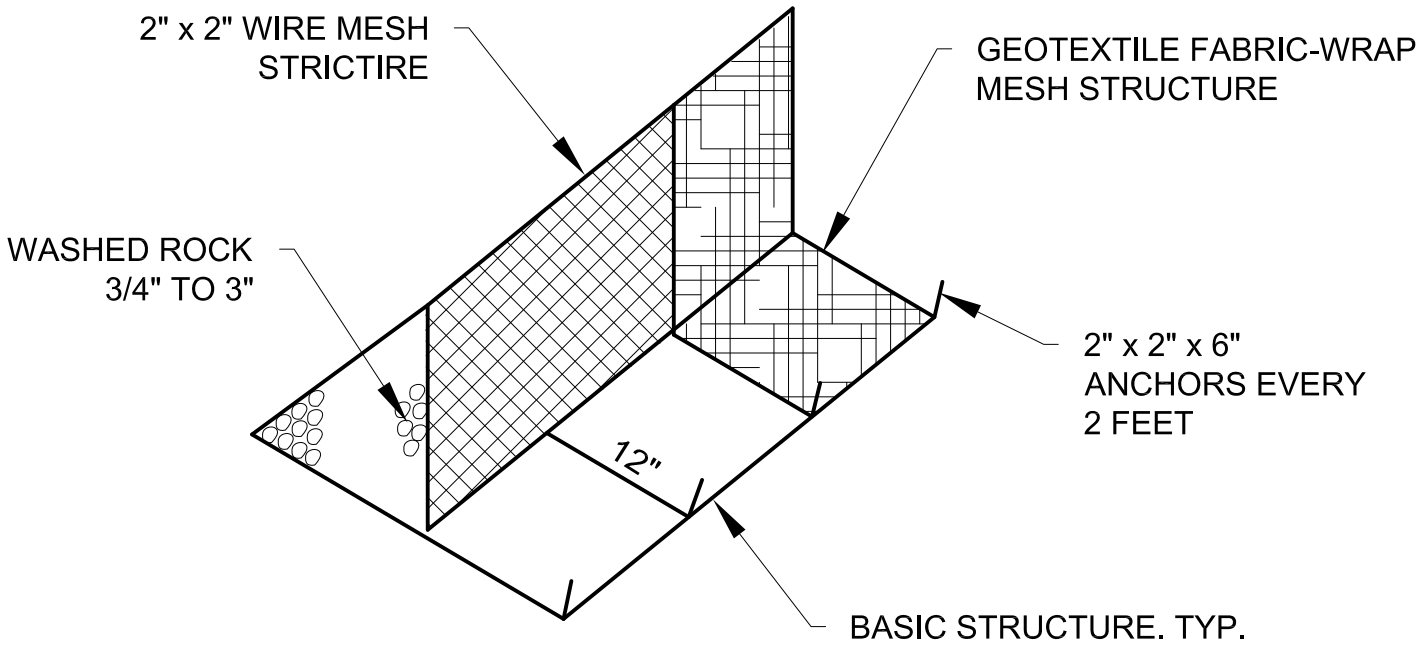

CITY OF EVERETT **PUBLIC WORKS DEPARTMENT**	TRIANGULAR SEDIMENT FILTER DIKES OPTION 3 & DETAIL SHT 2 OF 2	5/11/2011 Date: 207 COE Std Dwg:

T:\ACad\eps-coe design & constr specs for development\CURRENT\std detail dwgs\Dwg Files\STD207.dwg, 2/21/2014 8:25:37 AM

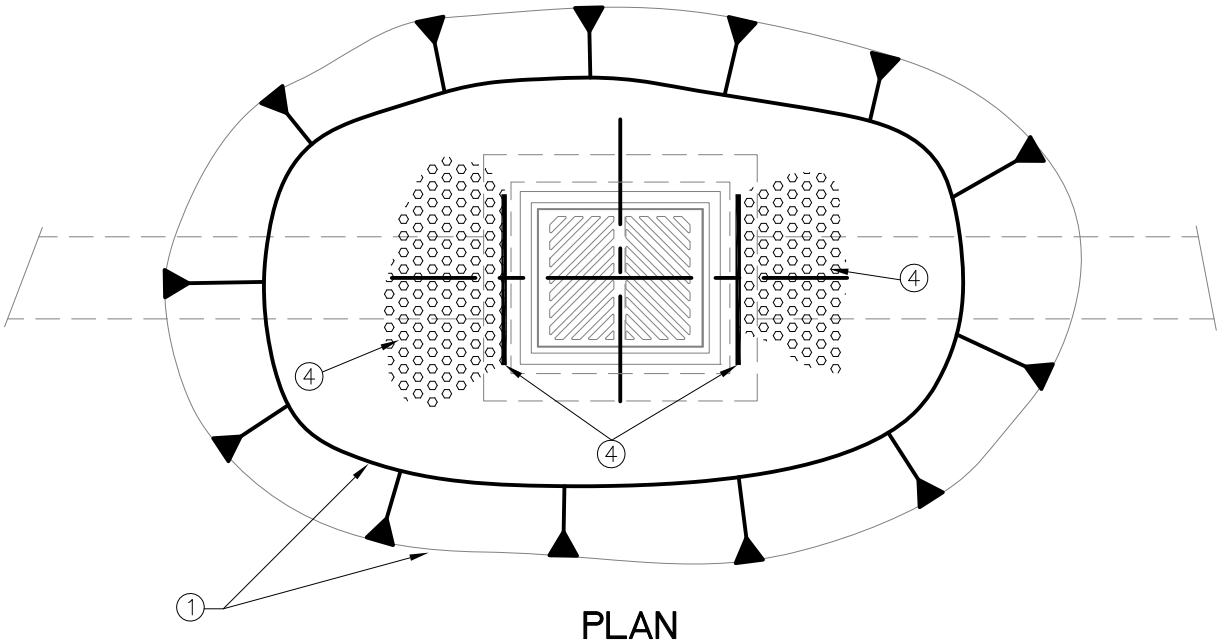

PLAN

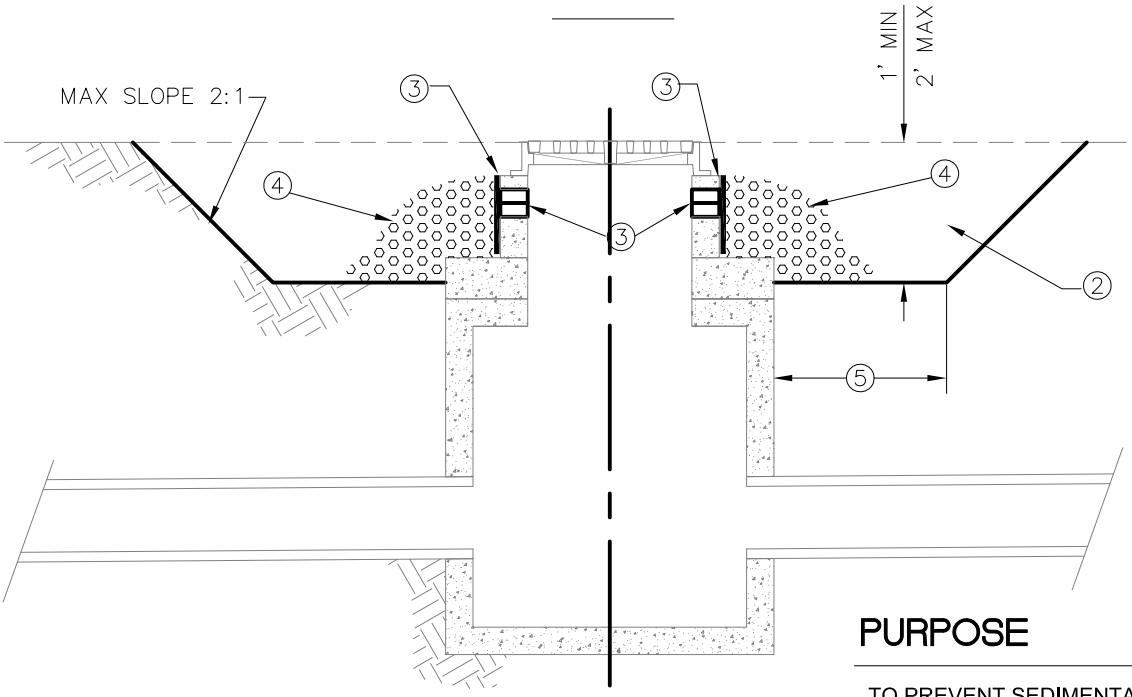

SECTION

PURPOSE

TO PREVENT SEDIMENTATION FROM ENTERING STORM DRAINAGE SYSTEM AT CATCH BASIN/INLETS DURING CONSTRUCTION.

NOTES

1. SHAPE OF SEDIMENTATION POND MAY VARY TO FIT DRAINAGE AREA AND TERRAIN. MODIFY AS NECESSARY TO ENSURE SATISFACTORY TRAPPING OF SEDIMENT.HALF-CIRCLE POND MAY BE USED WHEN CURB AND GUTTER ARE INSTALLED DURING STREET CONSTRUCTION.
2. CLEAN OUT WHEN SEDIMENT REACHES 6" BELOW GRATE
3. TEMPORARILY LEAVE OUT BLOCK. COVER OPENING WITH WIRE SCREEN.
4. PLACE GRAVEL IN FRONT OF SCREEN TO FILTER SEDIMENT.
5. SIZE POND BASED ON EXPECTED FLOWS DURING CONSTRUCTION.

CITY OF EVERETT PUBLIC WORKS DEPARTMENT	EXCAVATED DROP INLET	5/11/2011 Date:
		208 COE Std Dwg:

T:\ACad\eps-coe design & constr specs for development\CURRENT\std detail dwgs\Dwg Files\STD208.dwg, 2/21/2014 8:26:56 AM

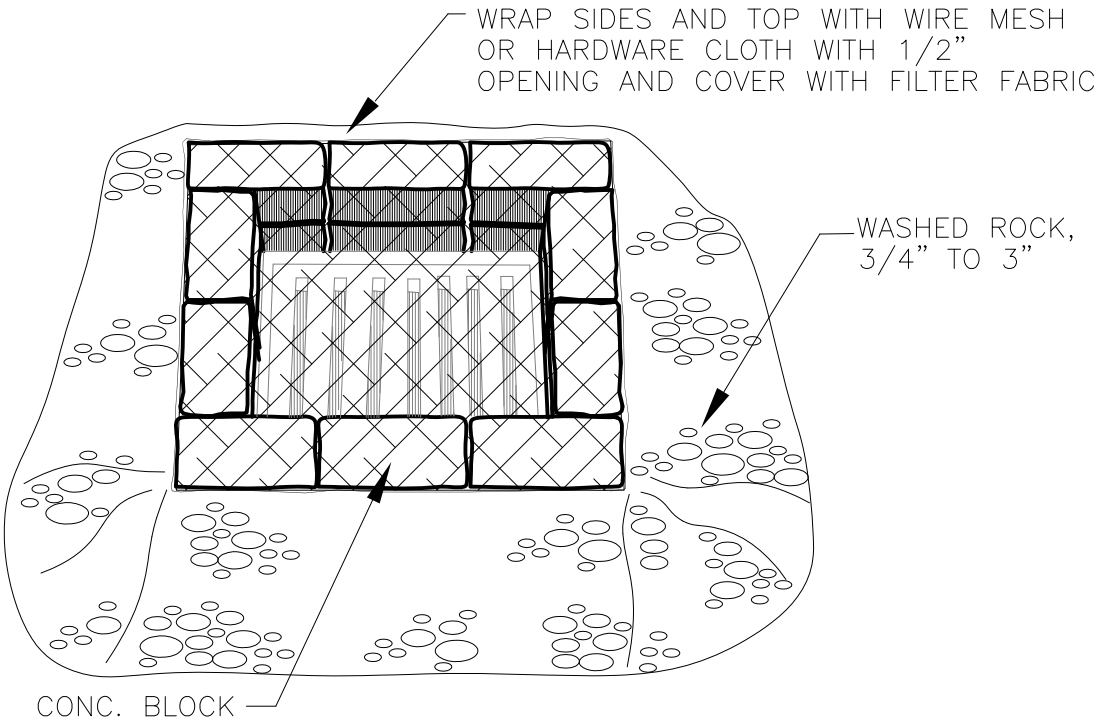

SECTION VIEW

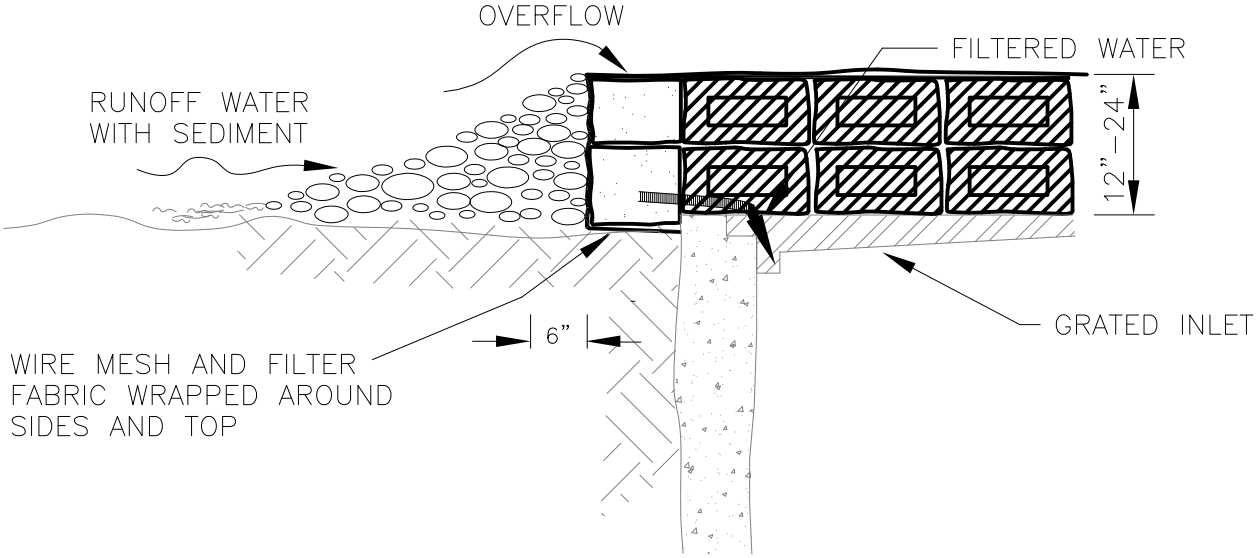

SECTION VIEW

CITY OF EVERETT
PUBLIC WORKS DEPARTMENT

INLET BLOCK & GRAVEL
FILTER SCHEMATIC

5/11/2011
Date:

209
COE Std Dwg:

T:\ACad\eps-coe design & constr specs for development\CURRENT\std detail dwgs\Dwg Files\STD209.dwg, 2/21/2014 8:27:53 AM

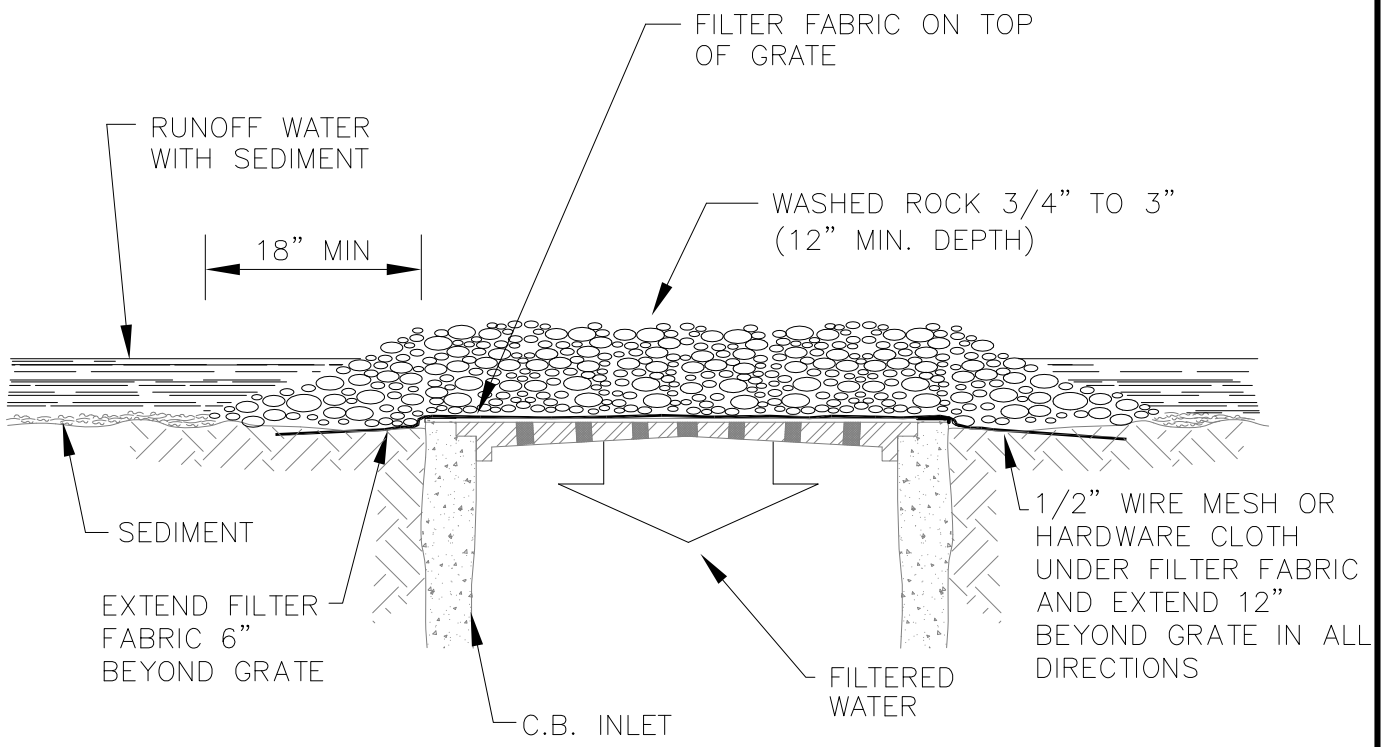

TEMPORARY SEDIMENT CONTROL INLET GRAVEL AND FILTER FABRIC

N.T.S.

CITY OF EVERETT PUBLIC WORKS DEPARTMENT	TEMPORARY SEDIMENT CONTROL INLET GRAVEL & WIRE MESH FILTER	5/11/2011 Date: 210 COE Std Dwg:

T:\ACad\eps-coe design & constr specs for development\CURRENT\std detail dwgs\Dwg Files\STD210.dwg, 2/21/2014 8:28:49 AM

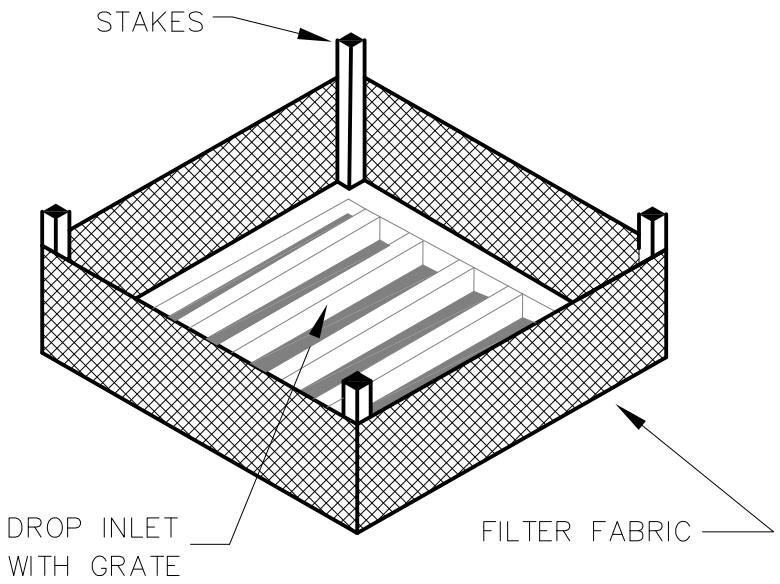

NOTE: ALL FILTER FABRIC SHALL
BE MIRAFI 140NS OR EQUAL

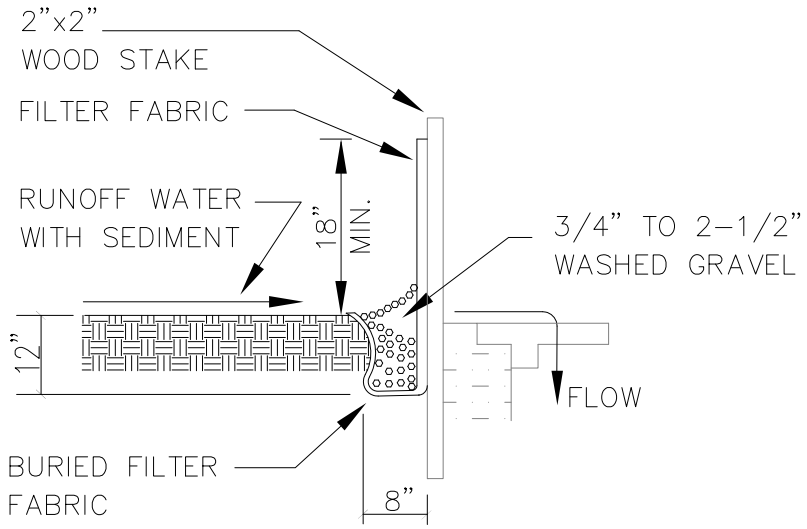

CITY OF EVERETT
PUBLIC WORKS DEPARTMENT

INLET FABRIC FENCE
FILTER

5/11/2011
Date:

212
COE Std Dwg:

T:\ACad\eps-coe design & constr specs for development\CURRENT\std detail dwgs\Dwg Files\STD212.dwg, 2/21/2014 8:30:46 AM

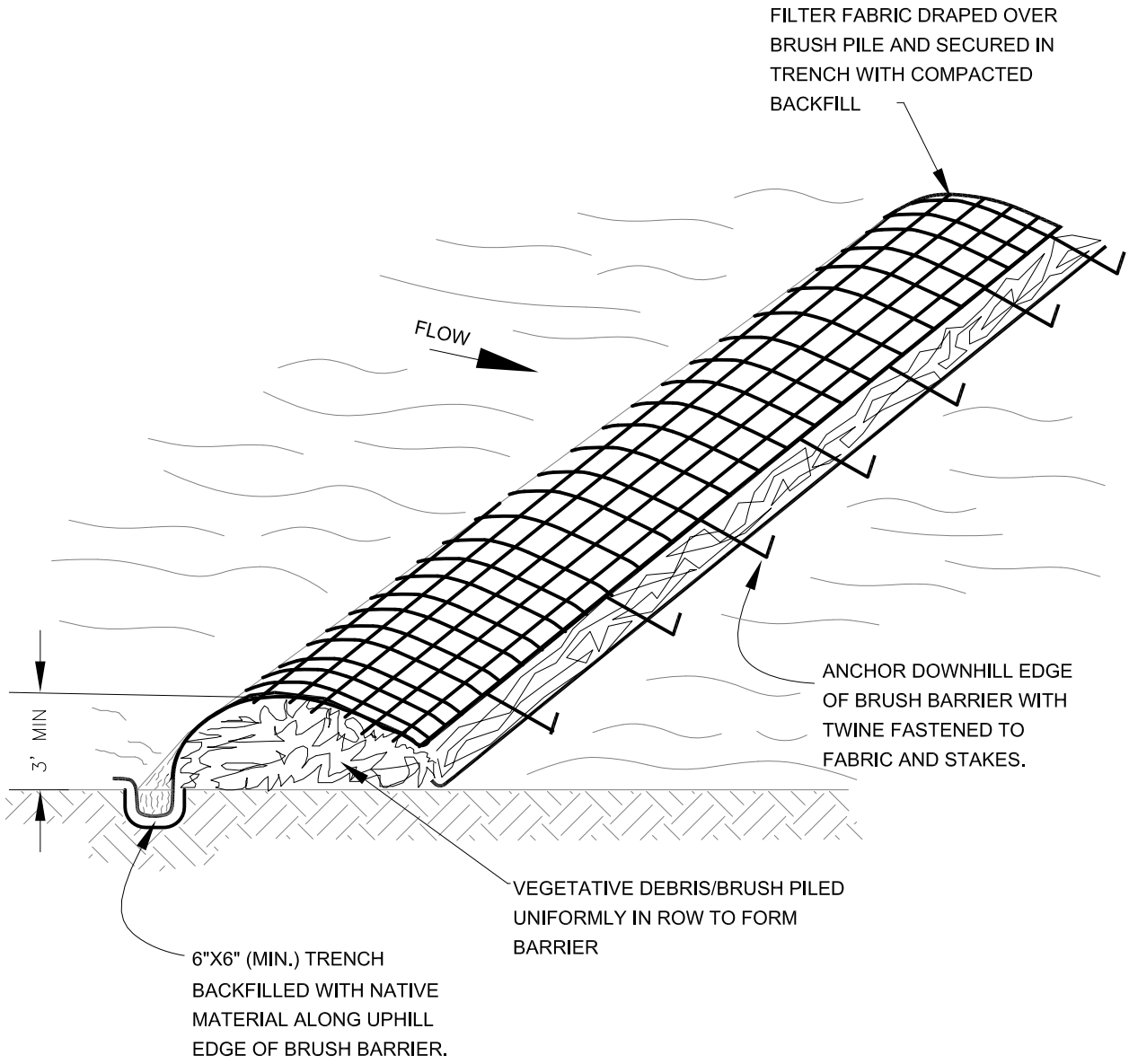

CITY OF EVERETT
PUBLIC WORKS DEPARTMENT

BRUSH BARRIER

5/11/2011
Date:

213
COE Std Dwg:

T:\ACad\eps-coe design & constr specs for development\CURRENT\std detail dwgs\Dwg Files\STD213.dwg, 2/21/2014 8:31:49 AM

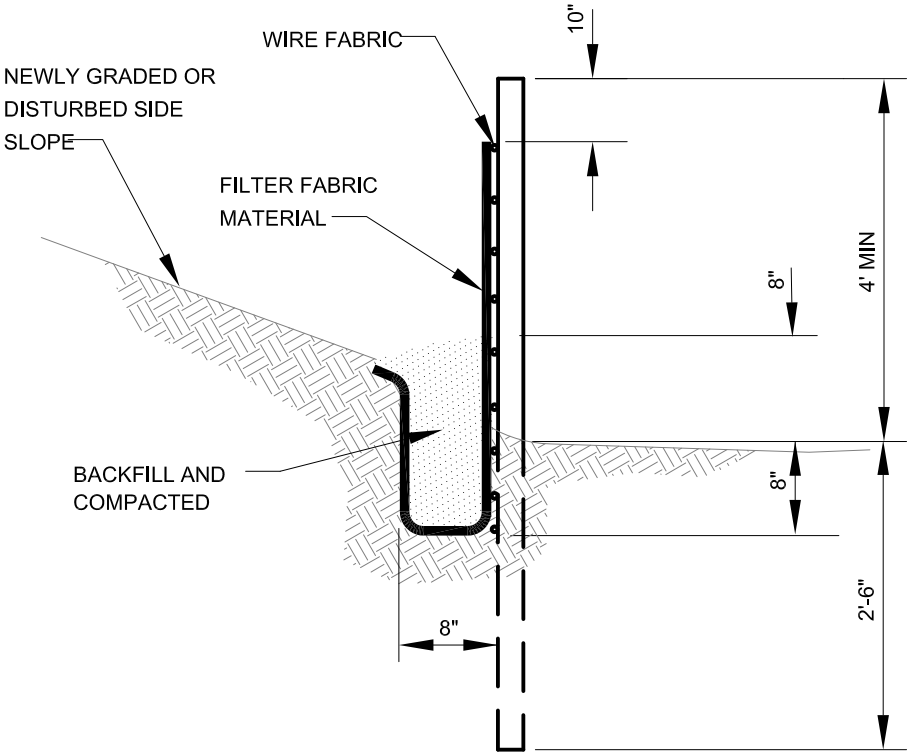

SECTION A-A

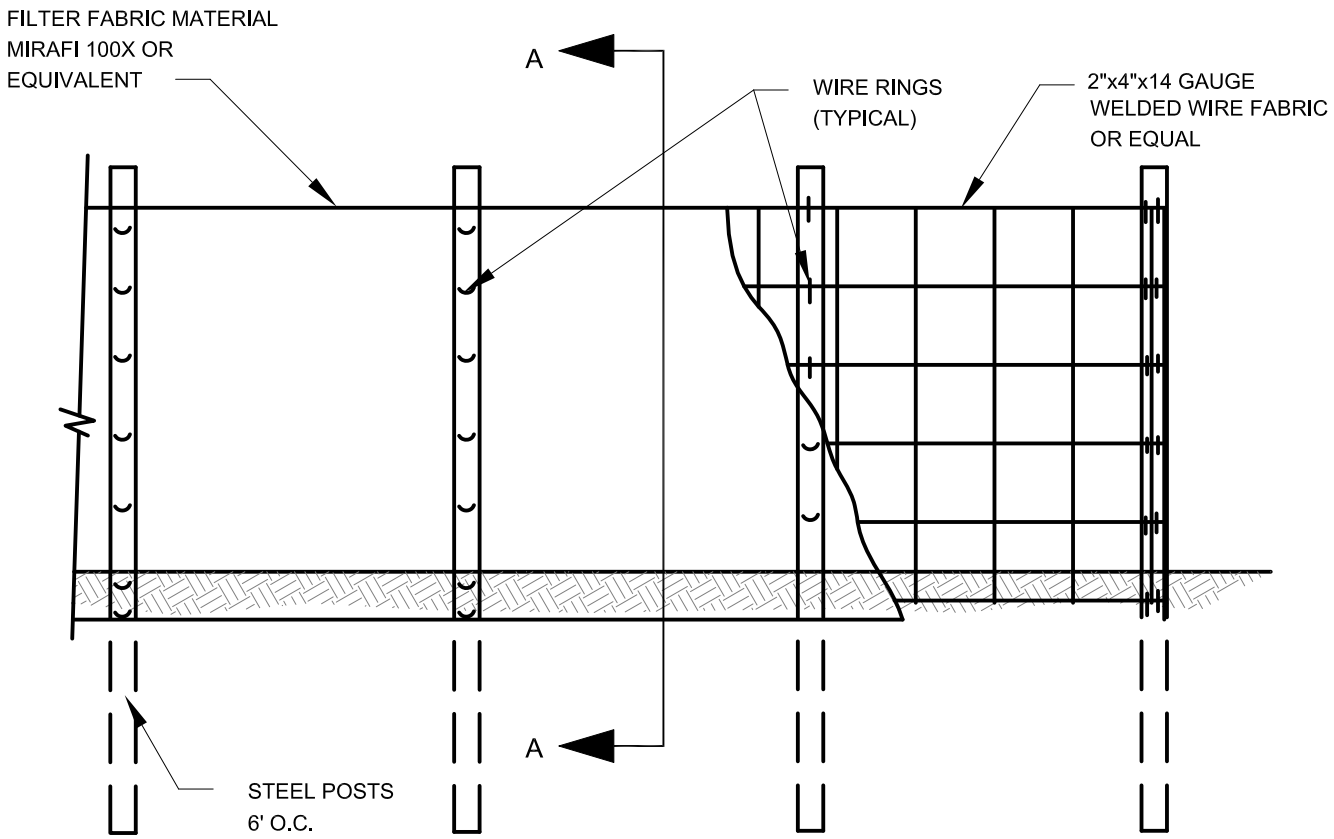

ELEVATION

CITY OF EVERETT
PUBLIC WORKS DEPARTMENT

TEMPORARY SILT FENCE

5/11/2011
Date:

214
COE Std Dwg:

T:\ACad\eps-coe design & constr specs for development\CURRENT\std detail dwgs\Dwg Files\STD214.dwg, 2/21/2014 8:32:42 AM

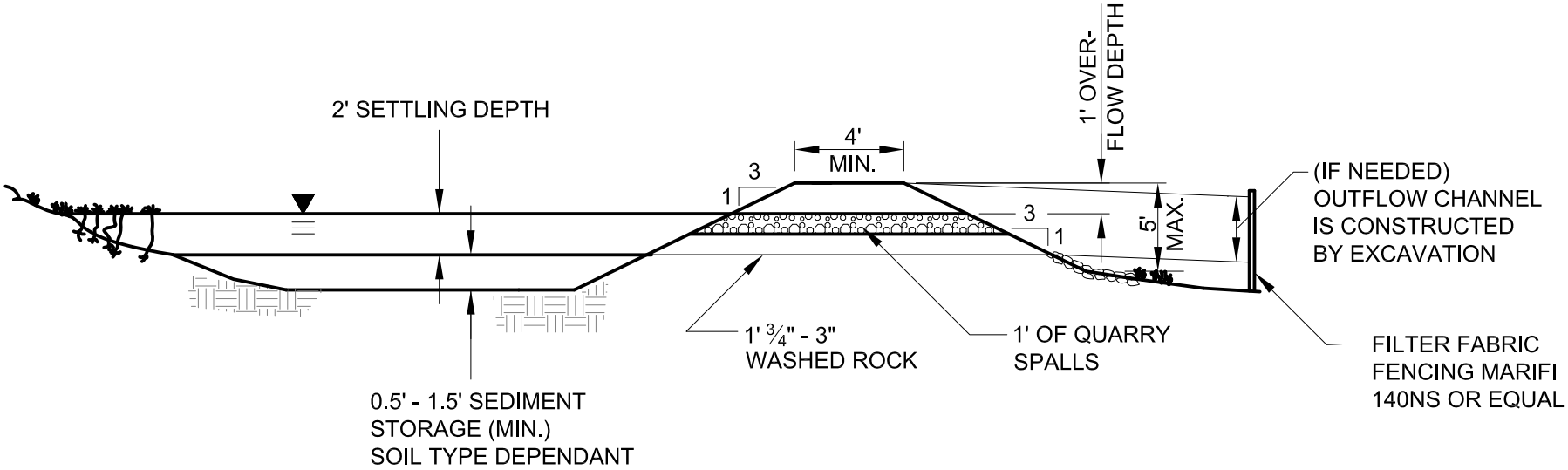

CROSS SECTION

EVERETT

CITY OF EVERETT
PUBLIC WORKS DEPARTMENT

SEDIMENT TRAP

Date: 5/11/2011

COE Std Dwg: 215

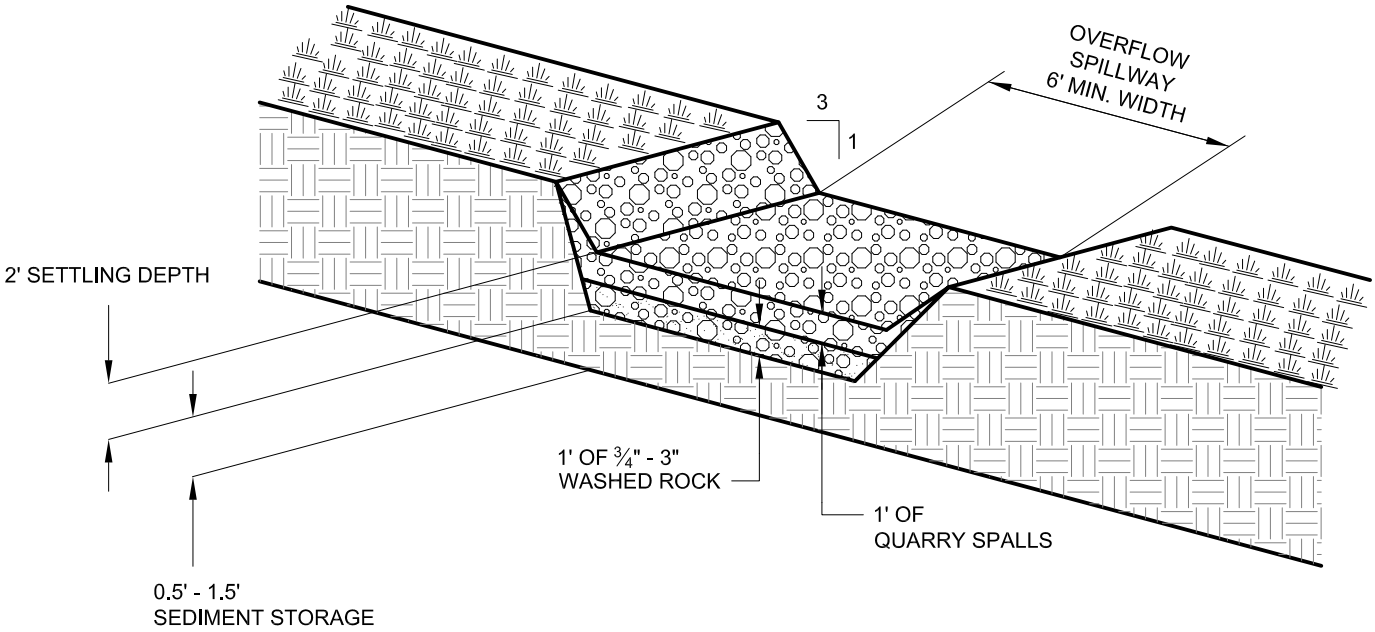

CITY OF EVERETT
PUBLIC WORKS DEPARTMENT

SEDIMENT TRAP OUTLET

5/11/2011
Date:

216
COE Std Dwg:

T:\ACad\eps-coe design & constr specs for development\CURRENT\std detail dwgs\Dwg Files\STD216.dwg, 2/21/2014 8:34:49 AM

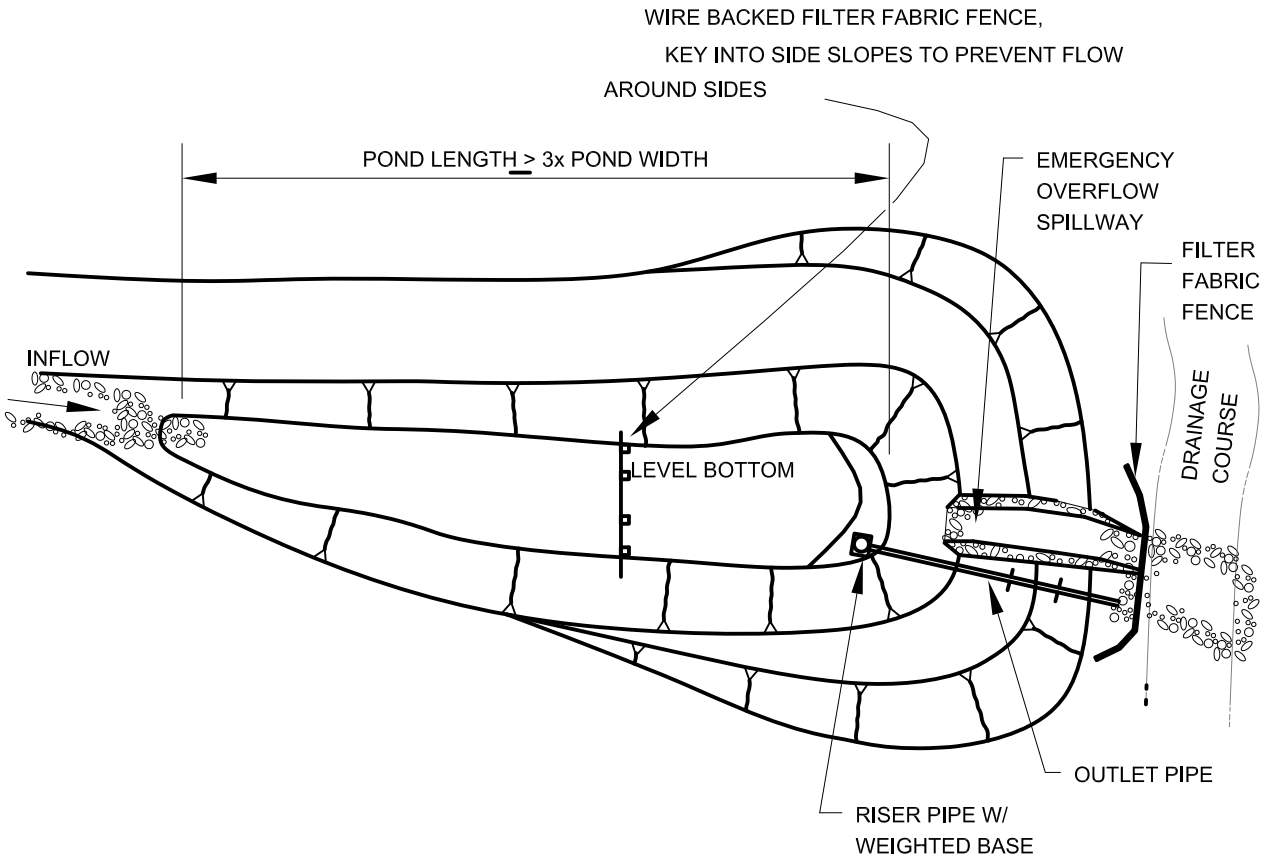

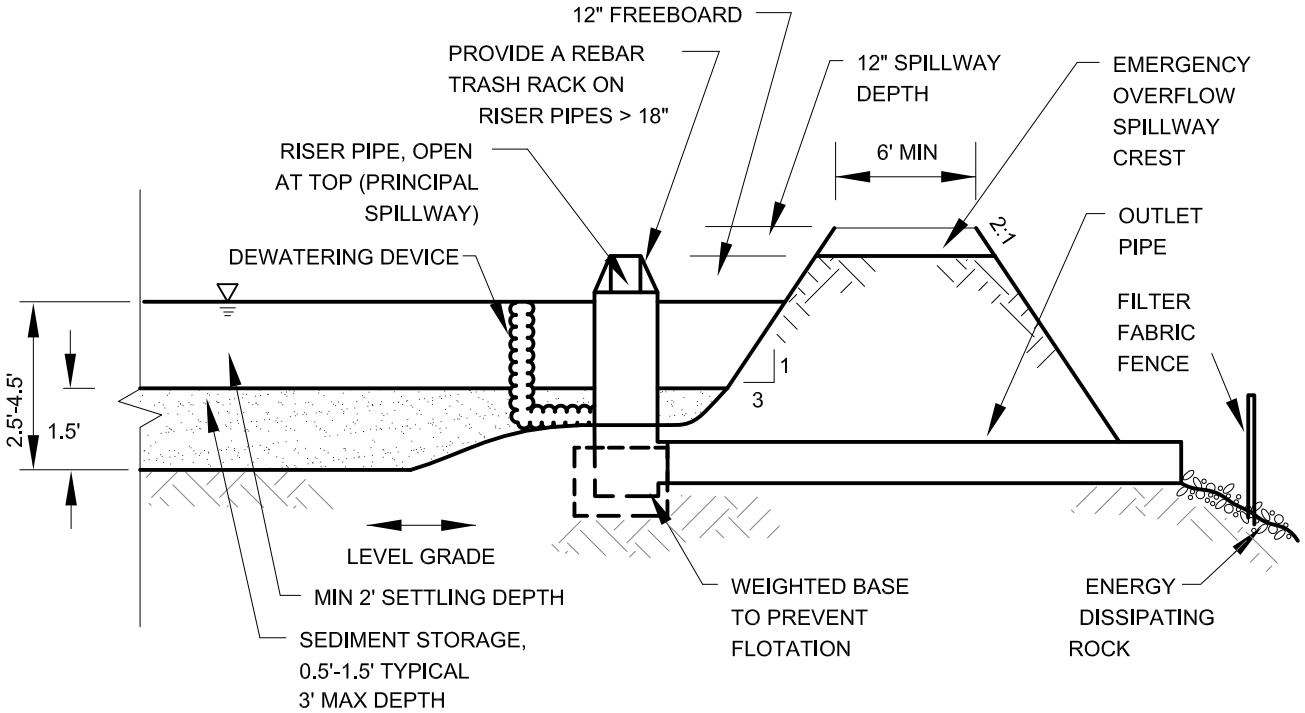

SECTION THROUGH OUTLET

CITY OF EVERETT
PUBLIC WORKS DEPARTMENT

SEDIMENT POND EXAMPLE

5/11/2011
Date:

217
COE Std Dwg:

T:\ACad\eps-coe design & constr specs for development\CURRENT\std detail dwgs\Dwg Files\STD217.dwg, 2/21/2014 8:35:36 AM

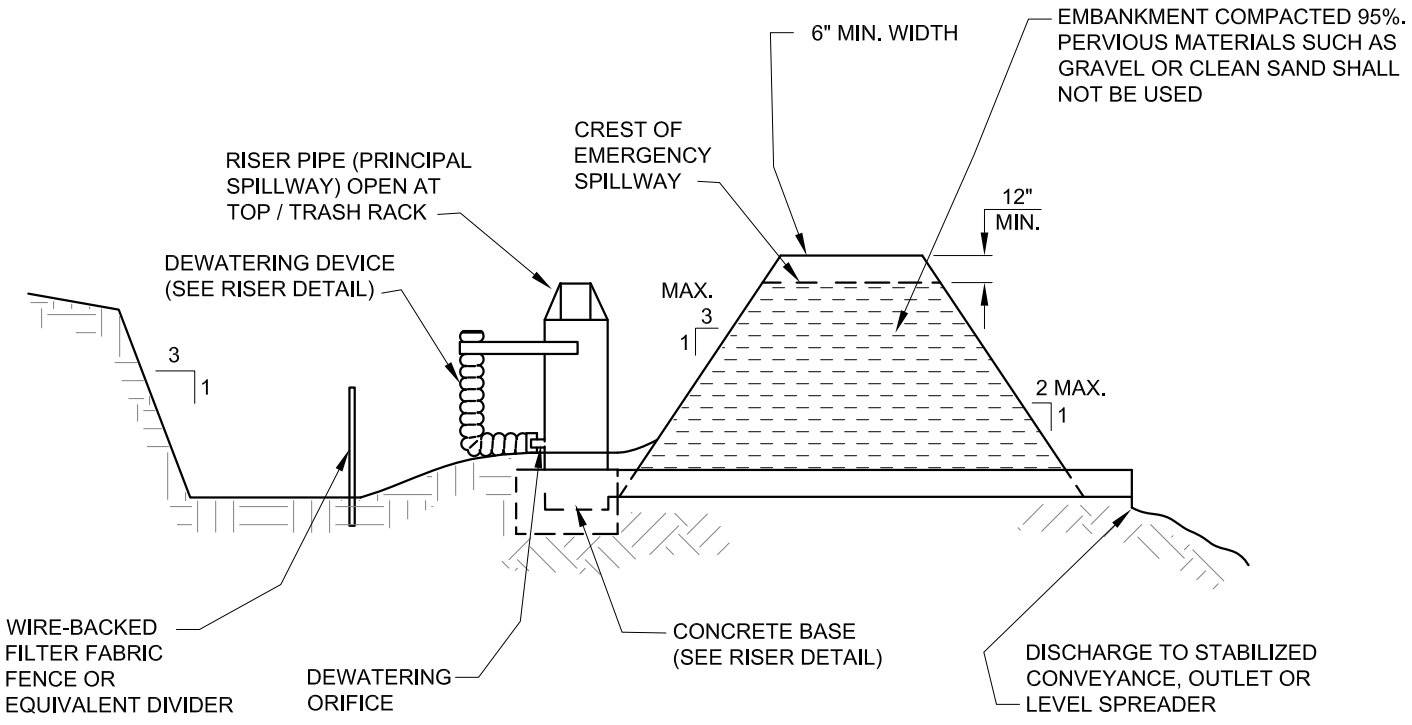

CITY OF EVERETT
PUBLIC WORKS DEPARTMENT

SEDIMENT POND CROSS-SECTION

5/11/2011
Date:

218
COE Std Dwg:

T:\ACad\eps-coe design & constr specs for development\CURRENT\std detail dwgs\Dwg Files\STD218.dwg, 2/21/2014 8:36:45 AM

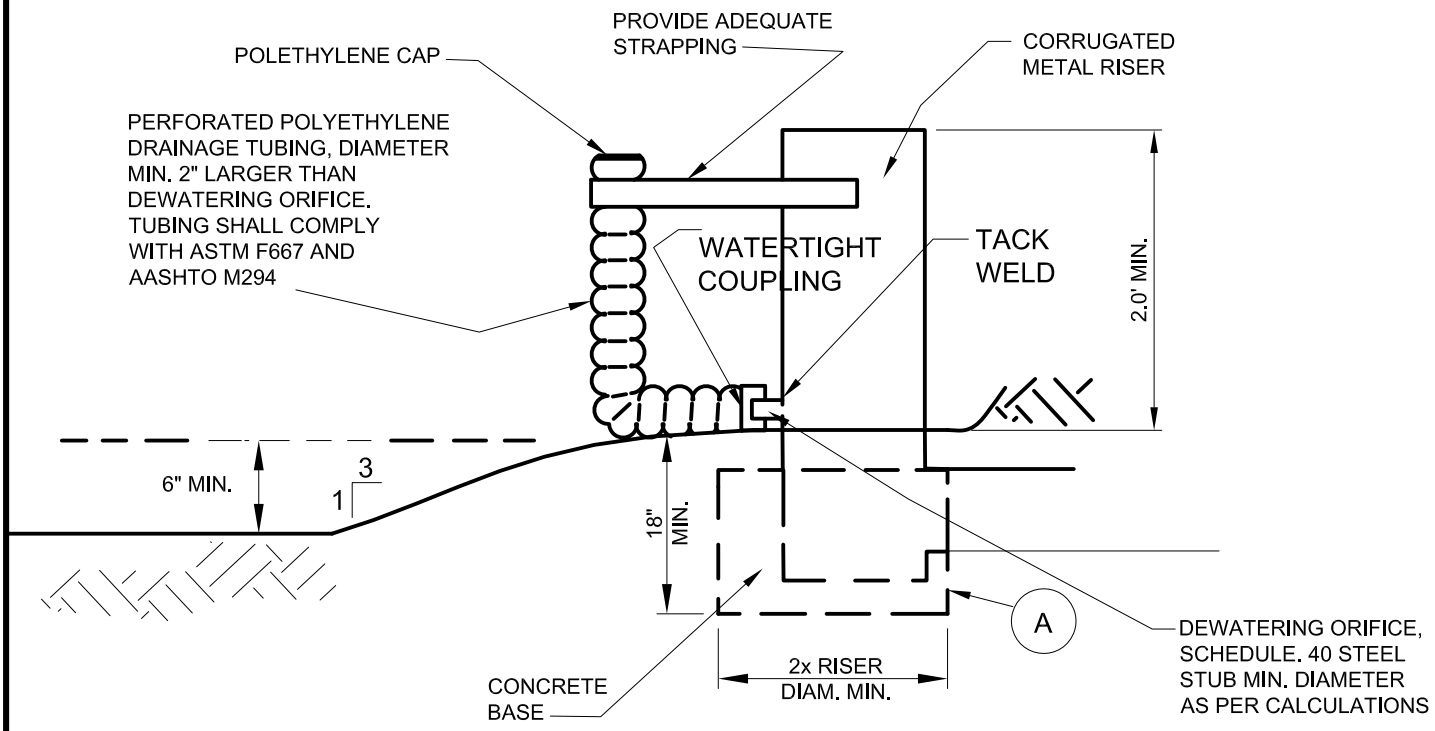

MAINTENANCE STANDARDS:

1. SEDIMENT SHALL BE REMOVED FROM THE POND WHEN IT REACHES 1' IN DEPTH.
2. ANY DAMAGE TO THE POND EMBANKMENTS OR SLOPES SHALL BE REPAIRED.

A — ALTERNATIVELY, METAL STAKES AND WIRE MAY BE USED TO PREVENT FLOTATION

CITY OF EVERETT
PUBLIC WORKS DEPARTMENT

RISER DETAIL

Date: 5/11/2011

COE Std Dwg: 219

T:\ACad\eps-coe design & constr specs for development\CURRENT\std detail dwgs\Dwg Files\STD219.dwg, 2/21/2014 8:37:56 AM

CLASSIFICATION of PUBLIC STREET	SHORT SUBDIVISION ACCESS (2)	LOCAL ACCESS "A"	LOCAL ACCESS "B"	COLLECTOR ARTERIAL	MINOR ARTERIAL	PRINCIPAL ARTERIAL
	Detached single family, duplex tri–plex, and four–plex residetial.					
Maximum Number of dwelling units serviced (3)	9	40	100	OVER 100	N.A	N.A
Minimum R.O.W	50'	60'	60'	60'	60'	80'
Minimum Pavement Width Curb to Curb	24' (4)	28' (4)	32' (4)	36'	44'	48'
Sidewalks (5)	1 to 4 D.U.–OPTIONAL 5 to 9 D.U.–REQUIRED	Required	Required	Required	Required	Required
Geometrics & Structural Section	Std. Plans # 302A & 302B	St. Plan # 302	St. Plan # 302	St. Plan # 301	St. Plan # 301	St. Plan # 301
Max. Allowable (1)	15%	15%	15%	12%	9%	8%
Utility Easement Beyond R.O.W Req'd	10' Each Side of Public R.O.W.			As Required By City Engineer		

(#) NOTES:

1. Maximum grade may be exceeded subject to approval by the City Engineer, such approval may be conditional upon the following:

   a) No practical alternative exists.
   b) Any grade over 15% will be review by the city on a case by case basis.

2. Can only be used on short plats and cannot be part of a larger development. Must be a permanent dead end.

3. Maximum potential number of dwelling units served, will include FORECASTED future development of adjacent areas.

4. 36' wide street section required if less than four(4) off–street parking spaces provided per dwelling unit. One (1) driveway allowed per lot on "access" streets.

5. City Engineer may allow sidewalk on one side only in areas of extensive cuts and/or fills and if projected pedestrian volumes are less than normal.

CITY OF EVERETT
PUBLIC WORKS DEPARTMENT

ROADWAY FUNCTIONAL CLASSIFICATIONS

7–1–2013
Date:

300
COE Std Dwg:

T:\ACad\eps-coe design & constr specs for development\CURRENT\std detail dwgs\Dwg Files\STD300.dwg, 2/21/2014 8:41:40 AM

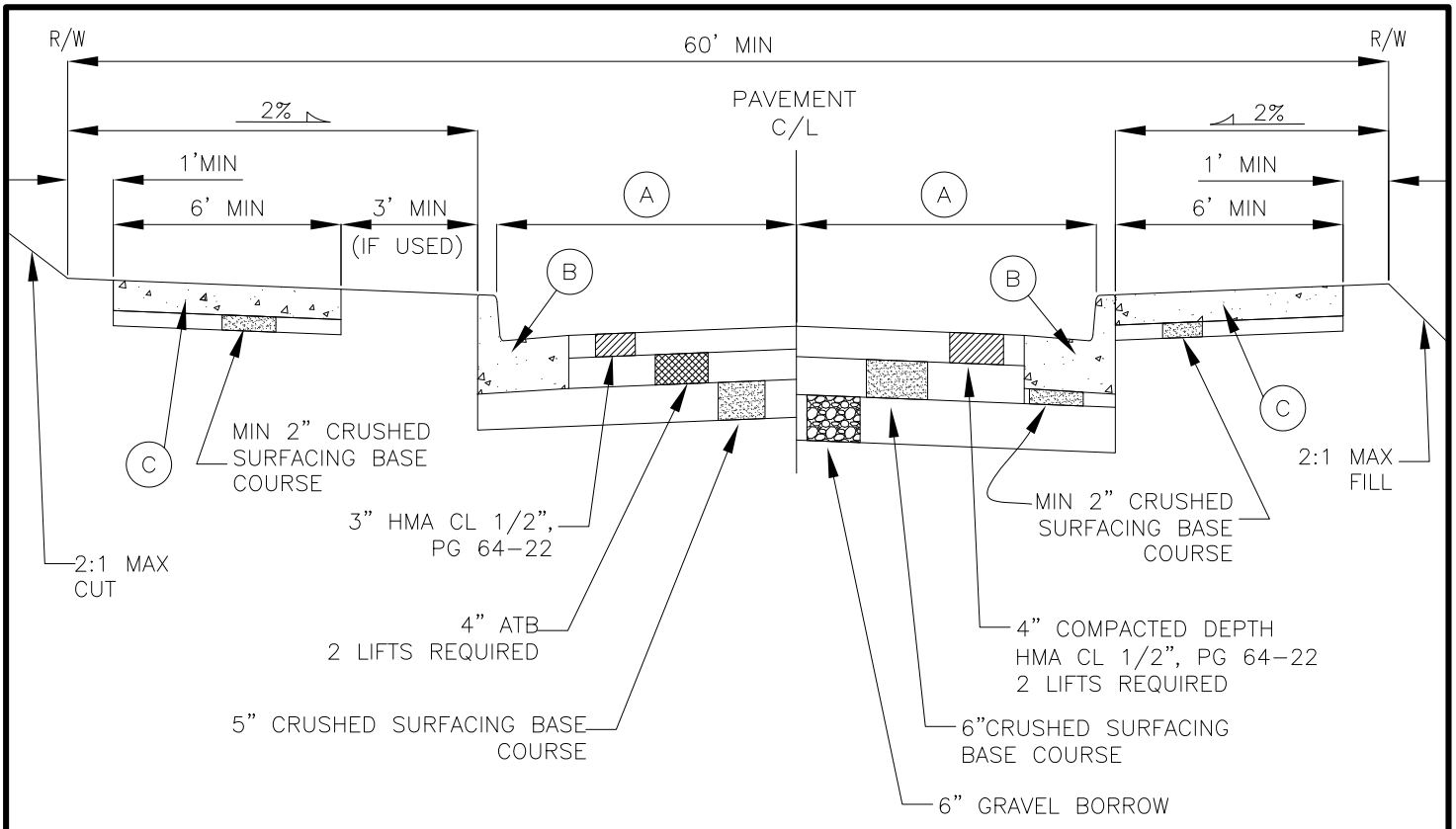

ALTERNATE ROADWAY SECTION

STANDARD ROADWAY SECTION

(A) PAVEMENT WIDTH

COLLECTOR ARTERIAL = 18'
MINOR ARTERIAL = 22'
PRINCIPAL ARTERIAL = 24+'

(B) CONCRETE CURB AND GUTTER TYPE A-1
SEE STD DWG 305A

(C) CEMENT CONCRETE SIDEWALK
SEE STD DWG 306

NOTES

1. ALL MATERIAL DEPTHS ARE COMPACTED DEPTHS.
2. IN WIDENING AREAS, THE EXISTING PAVEMENT EDGE SHALL BE SAW-CUT TO LEAVE A JOIN POINT. ANY TRAFFIC STRIPING REMOVED OR DAMAGED DURING WIDENING WORK SHALL BE REPLACED IN KIND OR AS DIRECTED BY THE CITY ENGINEER.
3. COMPACTION TESTS ON SUBGRADE AND TOP OF ROCK WILL BE REQUIRED. THE NUMBER OF TESTS SHALL BE AT THE DISCRETION OF THE CITY INSPECTOR. ALL TESTING SHALL BE THROUGH A LICENSED TESTING LABORATORY. THE MINIMUM COMPACTION SHALL BE 95% OF MAXIMUM DENSITY ON BOTH SUBGRADE AND TOP OF ROCK.
4. ADJUSTMENT OF CATCH BASIN LIDS OR GRATES, MONUMENTS CASES, VALVE BOXES, ETC SHALL BE THE RESPONSIBILITY OF THE CONTRACTOR OR DEVELOPER.
5. ROADWAY SECTION MAY BE PROPOSED WITH SUBMISSION OF SUBSTANTIATING ENGINEERING DATA (CBR, ETC) TO SUPPORT THE ADJUSTMENT. THE PROPOSAL MUST BE APPROVED BY THE CITY ENGINEER. FOR DESIGN PURPOSES, THE MINIMUM THICKNESS OF HMA CL 1/2", PG 64-22 SHALL BE 3" COMPACTED DEPTH. COMPACTION SHALL BE AN AVERAGE OF 91% OF RICE DENSITY.

CITY OF EVERETT PUBLIC WORKS DEPARTMENT	TYPICAL ROADWAY SECTIONS ARTERIALS	7-2-2013 Date: 301 COE Std Dwg:

T:\ACad\eps-coe design & constr specs for development\CURRENT\std detail dwgs\Dwg Files\STD301.dwg, 2/21/2014 8:58:36 AM

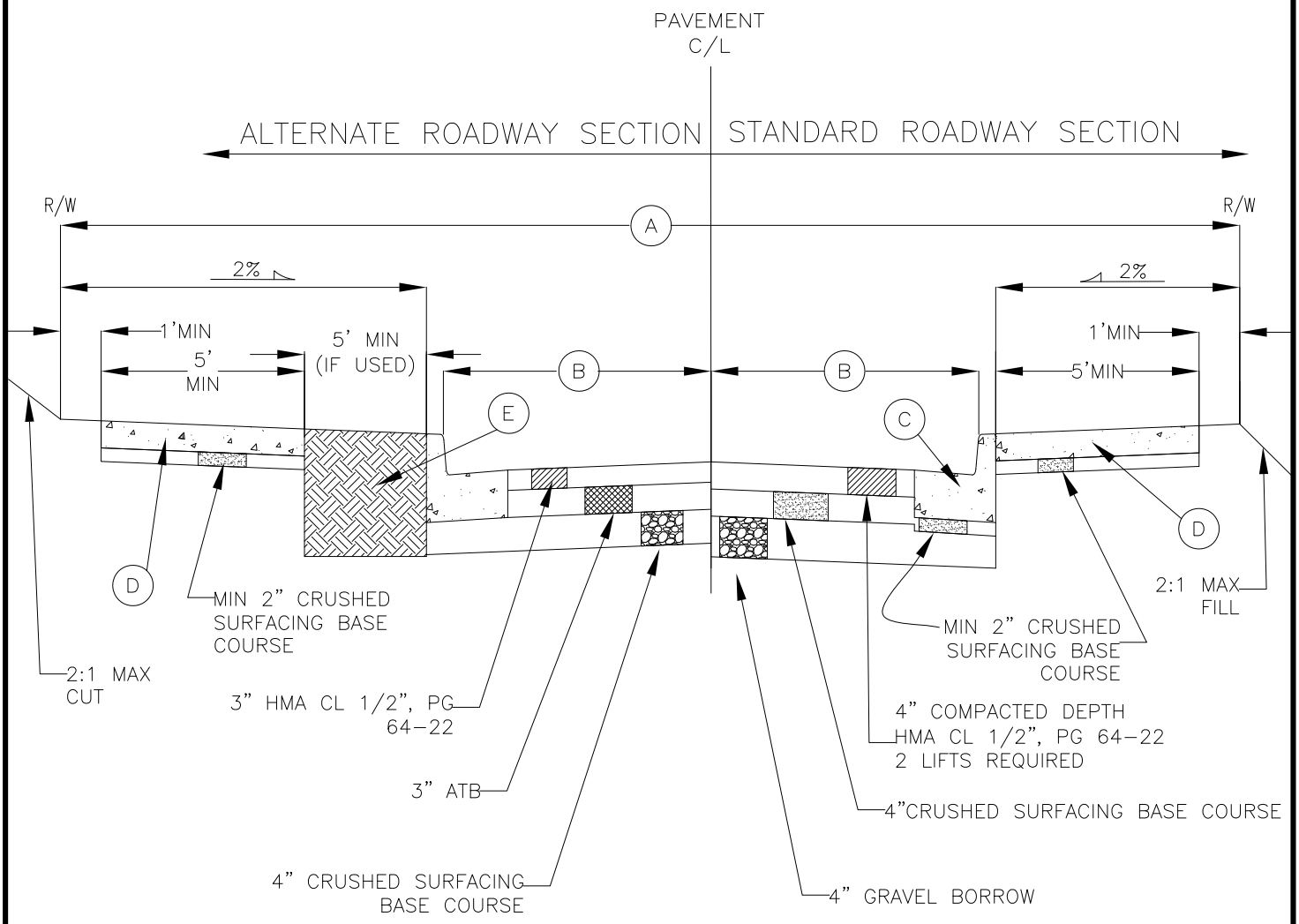

DESIGN CRITERIA

(A) RIGHT-OF-WAY REQUIREMENTS

SHORT PLAT ACCESS STREET	= 50'
LOCAL ACCESS A	= 60'
LOCAL ACCESS B	= 60'

(B) PAVEMENT WIDTH

SHORT PLAT ACCESS STREET	= 12'
LOCAL ACCESS A	= 14'
LOCAL ACCESS B	= 16'

(C) CONCRETE CURB AND GUTTER TYPE A-1 SEE STD DWG 305A

(D) CEMENT CONCRETE SIDEWALK SEE STD DWG 306

(E) AMENDED SOIL: 60% BACKFILL PER SAND DRAINS (WSDOT STD 9-03.13). 40% COMPOST.

- pH RANGE 5.5 – 7.0
- <5% PASSING #200 SIEVE
- 8-12% ORGANIC MATTER
- 2 INCH/HR MIN LONG TERM HYDRULIC CONDUCTIVITY PER ASTM D 2434 AT 85% COMPACTION
- COMPOST SHALL BE FROM A DEPARTMENT OF ECOLOGY PERMITTED COMPOSTING FACILITY.

CITY OF EVERETT PUBLIC WORKS DEPARTMENT	TYPICAL ROADWAY SECTIONS LOCAL ACCESS STREETS SHEET 1 OF 2	7-1-2013 Date: 302 COE Std Dwg:

T:\ACad\eps-coe design & constr specs for development\CURRENT\std detail dwgs\Dwg Files\STD302.dwg, 2/21/2014 8:59:40 AM

GENERAL NOTES:

1. ALL MATERIAL DEPTHS ARE COMPACTED DEPTHS.

2. IN WIDENING AREAS, THE EXISTING PAVEMENT EDGE SHALL BE SAW–CUT TO LEAVE A JOIN POINT. ANY TRAFFIC STRIPING REMOVED OR DAMAGED DURING WIDENING WORK SHALL BE REPLACED IN KIND OR AS DIRECTED BY THE CITY ENGINEER.

3. COMPACTION TESTS ON SUBGRADE AND TOP OF ROCK WILL BE REQUIRED. THE NUMBER OF TESTS SHALL BE AT THE DISCRETION OF THE CITY INSPECTOR. ALL TESTING SHALL BE THROUGH A LICENSED TESTING LABORATORY. THE MINIMUM COMPACTION SHALL BE 95% OF MAXIMUM DENSITY ON BOTH SUBGRADE AND TOP OF ROCK.

4. ADJUSTMENT OF CATCH BASIN LIDS OR GRATES, MONUMENTS CASES, VALVE BOXES, ETC SHALL BE THE RESPONSIBILITY OF THE CONTRACTOR OR DEVELOPER.

5. ROADWAY SECTION MAY BE PROPOSED WITH SUBMISSION OF SUBSTANTIATING ENGINEERING DATA (CBR, ETC) TO SUPPORT THE ADJUSTMENT. THE PROPOSAL MUST BE APPROVED BY THE CITY ENGINEER. FOR DESIGN PURPOSES, THE MINIMUM THICKNESS OF HMA CL 1/2", PG 64–22 SHALL BE 3" COMPACTED DEPTH. COMPACTION SHALL BE AN AVERAGE OF 91% OF RICE DENSITY.

6. ALL LOW IMPACT AREAS SHALL HAVE 'BIORETENTION SOIL' PER CURRENT EDITION OF "LOW IMPACT DEVELOPMENT TECHNICAL GUIDANCE MANUAL FOR PUGET SOUND"

T:\ACad\eps-coe design & constr specs for development\CURRENT\std detail dwgs\Dwg Files\STD302.dwg, 2/21/2014 9:00:18 AM

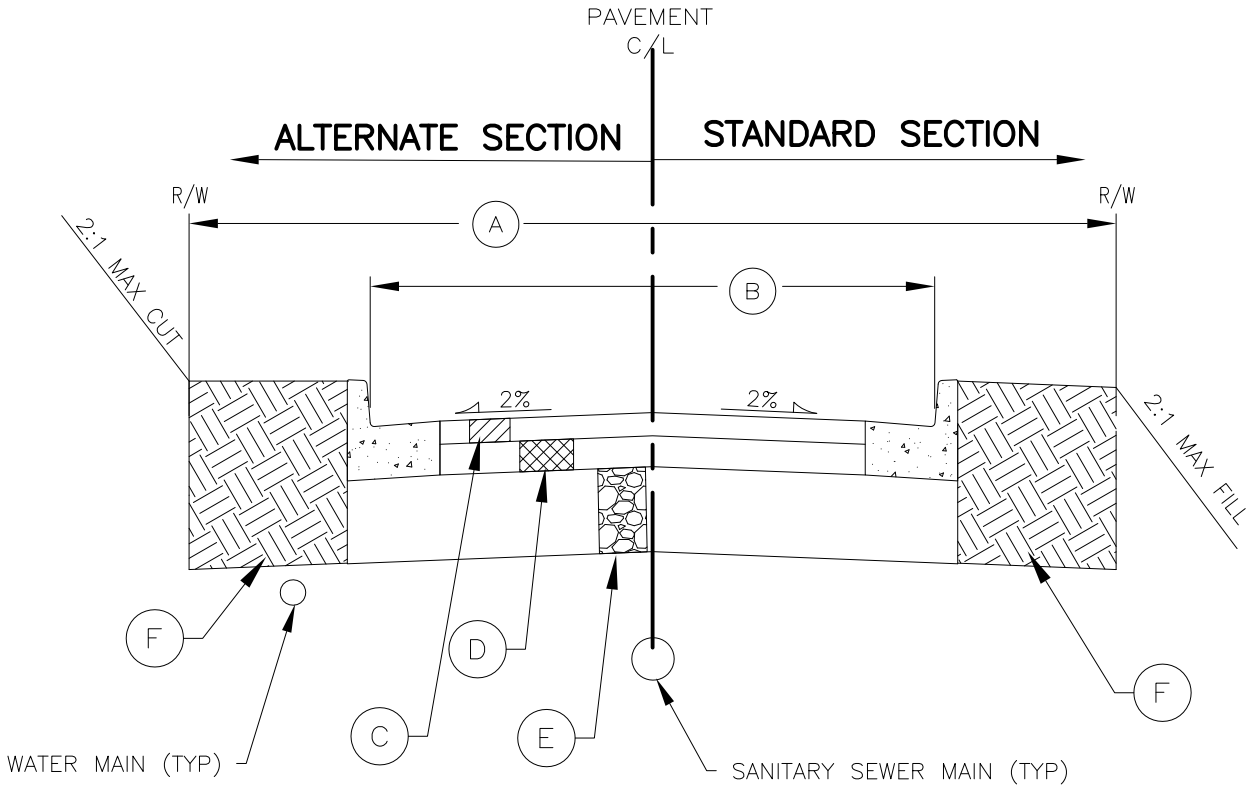

(A) SECTION NOTES:

A. EASEMENT ACCESS WIDTH = 30' TO 40'

B. PAVEMENT WIDTH SHALL BE 20' AND BE SYMETRICAL ABOUT A POINT 10' FROM FACE OF CURB.

C. 3" COMPACTED DEPTH HMA CL 1/2" PG 64-22.

D. 4" COMPACTED DEPTH CRUSHED SURFACING BASE COURSE. 2" MIN DEPTH UNDER CURB AND CUTTER.

E. 5" MIN. COMPACTED DEPTH GRAVEL BORROW.

F. AMENDED SOIL: 60% BACKFILL PER SAND DRAINS (WSDOT STD 9-03.13). 40% COMPOST.
- pH RANGE 5.5 - 7.0
- <5% PASSING #200 SIEVE
- 8-12% ORGANIC MATTER
- 2 INCH/HR MIN LONG TERM HYDRULIC CONDUCTIVITY PER ASTM D 2434 AT 85% COMPACTION
- COMPOST SHALL BE FROM A DEPARTMENT OF ECOLOGY PERMITTED COMPOSTING FACILITY.

UTILITY NOTES:

1. 5' MIN SEPARATION BETWEEN CITY OPERATED UTILITIES AND OTHER PRIVATE AND PUBLIC OPERATED UTILITIES (PUD, CABLE TV, PHONE, GAS ETC.)

2. NON CITY OPERATED PUBLIC UTILITIES MAY CROSS CITY EXCLUSIVE EASEMENT ONLY BETWEEN 45° AND 90° WITH RIDGED STEEL CONDUIT OR PVC CONDUIT ENCASED IN RED CONCRETE WITH CITY ENGINEER APPROVAL.

3. CONDUIT DUCTING SHALL HAVE A MINIMUM COVER OF 3' AND NOT OBSTRUCT CROSSING BY OTHER UTILITIES FOR A VERTICAL DISTANCE GREATER THAN 3' IN EITHER EASEMENT.

4. ONLY CITY OPERATED UTILITIES SHALL BE ALLOWED WITHIN CITY EXCLUSIVE EASEMENT NO OTHER EASEMENTS MAY BE GRANTED WITHIN THE LIMITS OF THIS EASEMENT.

CITY OF EVERETT PUBLIC WORKS DEPARTMENT	TYPICAL SECTION ACCESS DRIVE SHORT SUBDIVISON EASEMENT SHEET 1 OF 2	7-2-2013 Date: 302A COE Std Dwg:

T:\ACad\eps-coe design & constr specs for development\CURRENT\std detail dwgs\Dwg Files\STD302A.dwg, 2/21/2014 9:01:35 AM

GENERAL NOTES:

1. FOR ANY EASEMENT ACCESS OR EASEMENT WITH PUBLIC UTILITIES, THE CITY ENGINEER SHALL DETERMINE THE REQUIRED EASEMENT WIDTH BASED ON CITY STANDARDS.

2. WITH THE EXCEPTION OF THE EASEMENT ACCESS DRIVE, NO NEW DRIVEWAYS OR PARKING AREAS WILL BE PERMITTED WITHIN THE FRONT YARD SETBACK AREA FOR ALL LOTS THAT FRONT ON THE PUBLIC STREET.

3. ACCESS OFF AN EASEMENT DRIVE IS LIMITED TO ONE TWENTY FOOT DRIVEWAY AND CURB CUT PER LOT. THE DRIVEWAY SHALL NOT EXCEED TWENTY FEET IN WIDTH FOR A DISTANCE OF TWENTY FEET FROM THE EASEMENT ACCESS DRIVE CURB. THE MINIMUM PARKING STALL WIDTH FOR 2 CARS IN FRONT OF THE GARAGE IS 20 FEET BY 20 FEET – TWO (2) STALLS. THE MINIMUM PARKING PAD FOR 4 OFF–STREET IS 20 FEET BY 40 FEET.

4. SURFACE PARKING: EMC18.28.120 SURFACE PARKING IS ONLY PERMITTED ON A LOT WITH AN EXISTING HOUSE. THIS PARKING AREA MAY NOT BE BETWEEN THE EXISTING HOUSE AND THE PUBLIC STREET. THE PARKING PAD MUST BE A MINIMUM OF 20 FEET BY 40 FEET AND BE A MINIMUM OF 5 FEET FROM ANY NEW PROPERTY LINE AND MAY NOT BE WITHIN THE REQUIRED OPEN SPACE.

5. GARAGES: EMC 18.28.150 ON ALL NEW LOTS WHERE PROPOSED SINGLE FAMILY DWELLINGS ARE PROPOSED A TWO (2) CAR GARAGE IS REQUIRED.

6. EMC 18.28.120 ALL DEVELOPMENT STANDARDS FOR EASEMENT ACCESS DRIVES MUST BE MET.

7. ALL LOW IMPACT AREAS SHALL HAVE 'BIORETENTION SOIL' PER CURRENT EDITION OF "LOW IMPACT DEVELOPMENT TECHNICAL GUIDANCE MANUAL FOR PUGET SOUND"

CITY OF EVERETT PUBLIC WORKS DEPARTMENT	TYPICAL SECTION ACCESS DRIVE SHORT SUBDIVISON EASEMENT SHEET 2 OF 2	7-1-2013 Date: 302A COE Std Dwg:

T:\ACad\eps-coe design & constr specs for development\CURRENT\std detail dwgs\Dwg Files\STD302A.dwg, 2/21/2014 9:02:02 AM

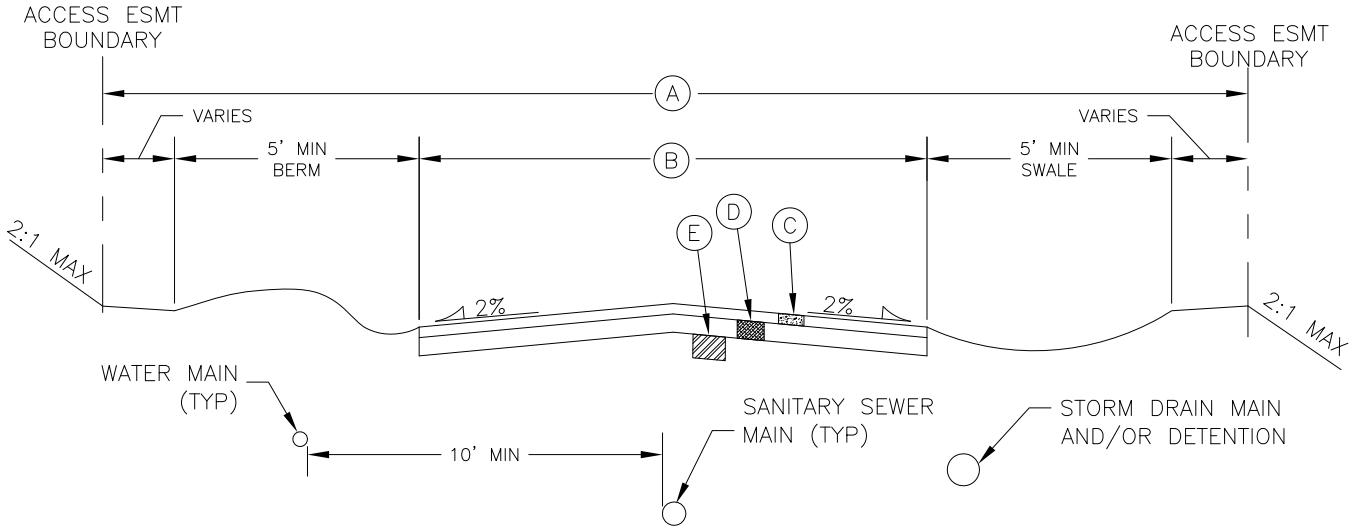

STANDARD ROADWAY SECTION

A. EASEMENT ACCESS WIDTH = 24' MIN.

B. PAVEMENT WIDTH SHALL BE 14'.

C. 3" HMA CL 1/2", PG 64-22.

D. 4" COMPACTED DEPTH CRUSHED SURFACING BASE COURSE.

E. COMPACTED SUBGRADE. IF UNSUITABLE, OVEREXCAVATE AND BACKFILL WITH GRAVEL BORROW.

EASEMENT AND UTILITY NOTES:

1. 5' MIN SEPARATION BETWEEN CITY OPERATED UTILITIES AND OTHER PRIVATE AND PUBLIC OPERATED UTILITIES (PUD, CABLE TV, PHONE, GAS ETC.)
2. NON CITY OPERATED PUBLIC UTILITIES MAY CROSS CITY EXCLUSIVE EASEMENT ONLY BETWEEN 45° AND 90° WITH RIDGED STEEL CONDUIT OR PVC CONDUIT ENCASED IN RED CONCRETE AT THE PUBLIC WORKS INSPECTORS OPTION.
3. CONDUIT DUCTING SHALL HAVE A MINIMUM COVER OF 3' AND NOT OBSTRUCT CROSSING BY OTHER UTILITIES FOR A VERTICAL DISTANCE GREATER THAN 3' IN EITHER EASEMENT.
4. ONLY CITY OPERATED UTILITIES SHALL BE ALLOWED WITHIN CITY EXCLUSIVE EASEMENT NO OTHER EASEMENTS MAY BE GRANTED WITHIN THE LIMITS OF THIS EASEMENT.

GENERAL NOTES:

1. FOR ANY EASEMENT ACCESS OR EASEMENT WITH PUBLIC UTILITIES, THE CITY ENGINEER SHALL DETERMINE THE REQUIRED EASEMENT WIDTH BASED ON CITY STANDARDS.
2. WITH THE EXCEPTION OF THE EASEMENT ACCESS DRIVE, NO NEW DRIVEWAYS OR PARKING AREAS WILL BE PERMITTED WITHIN THE FRONT YARD SETBACK AREA FOR ALL LOTS THAT FRONT ON THE PUBLIC STREET.
3. ACCESS OFF AN EASEMENT DRIVE IS LIMITED TO ONE TWENTY FOOT DRIVEWAY AND CURB CUT PER LOT. THE DRIVEWAY SHALL NOT EXCEED TWENTY FEET IN WIDTH FOR A DISTANCE OF TWENTY FEET FROM THE EASEMENT ACCESS DRIVE CURB. THE MINIMUM PARKING STALL WIDTH FOR 2 CARS IN FRONT OF THE GARAGE IS 20 FEET BY 20 FEET – TWO (2) STALLS. THE MINIMUM PARKING PAD FOR 4 OFF-STREET IS 20 FEET BY 40 FEET.
4. SURFACE PARKING: EMC18.28.120 SURFACE PARKING IS ONLY PERMITTED ON A LOT WITH AN EXISTING HOUSE. THIS PARKING AREA MAY NOT BE BETWEEN THE EXISTING HOUSE AND THE PUBLIC STREET. THE PARKING PAD MUST BE A MINIMUM OF 20 FEET BY 40 FEET AND BE A MINIMUM OF 5 FEET FROM ANY NEW PROPERTY LINE AND MAY NOT BE WITHIN THE REQUIRED OPEN SPACE.
5. GARAGES: EMC 18.28.150 ON ALL NEW LOTS WHERE PROPOSED SINGLE FAMILY DWELLINGS ARE PROPOSED A TWO (2) CAR GARAGE IS REQUIRED.
6. EMC 18.28.120 ALL DEVELOPMENT STANDARDS FOR EASEMENT ACCESS DRIVES MUST BE MET.

CITY OF EVERETT PUBLIC WORKS DEPARTMENT	2 LOT SHORT SUBDIVISON EASEMENT ACCESS DRIVE SECTION	7-1-2013 Date: 302B COE Std Dwg:

T:\ACad\eps-coe design & constr specs for development\CURRENT\std detail dwgs\Dwg Files\STD302B.dwg, 2/21/2014 9:03:06 AM

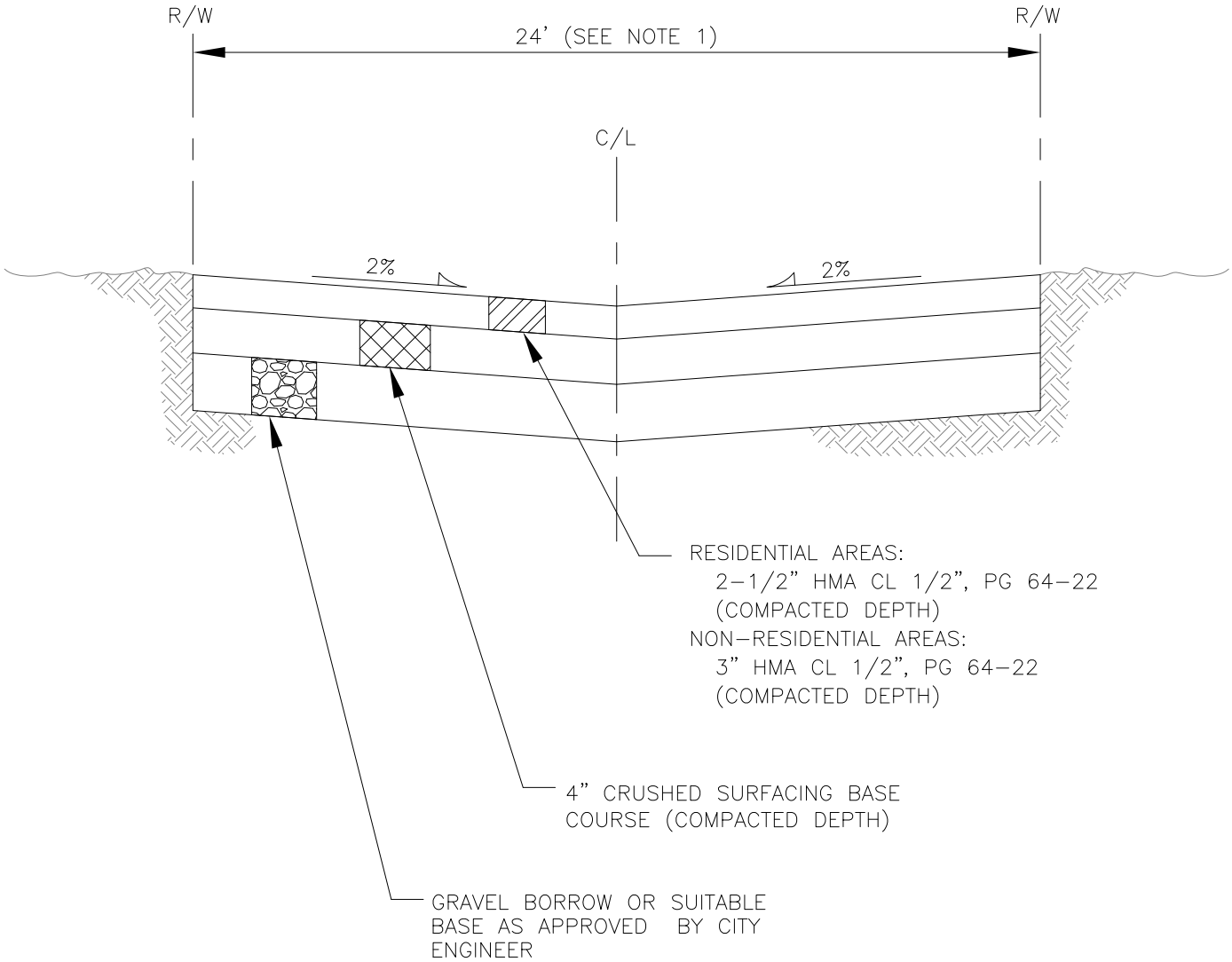

NOTES

1. ALL NEW ALLEYS SHALL HAVE A MINIMUM WIDTH OF 24'. EXISTING ALLEY RIGHT-OF-WAYS MAY VARY FROM 12' TO 24'.
2. DRAINAGE TO BE COLLECTED AT LOW END OF IMPROVED SECTION WITH CATCH BASIN CONNECTED TO STORM DRAINAGE SYSTEM.
3. COMPACTION TESTS ON SUBGRADE AND TOP OF ROCK WILL BE REQUIRED. THE NUMBER OF TESTS SHALL BE AT THE DISCRETION OF THE CITY ENGINEER. ALL TESTING SHALL BE THROUGH A LICENSED TESTING LABORATORY. THE MINIMUM COMPACTION SHALL BE 95% OF MAXIMUM DENSITY OF BOTH SUBGRADE AND TOP OF ROCK.
4. ADJUSTMENT OF CATCH BASIN LIDS OR GRATES, MONUMENT CASES, VALVE BOXES, ETC SHALL BE THE RESPONSIBILITY OF THE CONTRACTOR OR DEVELOPER AS REQUIRED.

CITY OF EVERETT **PUBLIC WORKS DEPARTMENT**	TYPICAL ROADWAY SECTION **ALLEY**	7-1-2013 Date: 303 COE Std Dwg:

T:\ACad\eps-coe design & constr specs for development\CURRENT\std detail dwgs\Dwg Files\STD303.dwg, 2/21/2014 9:04:03 AM

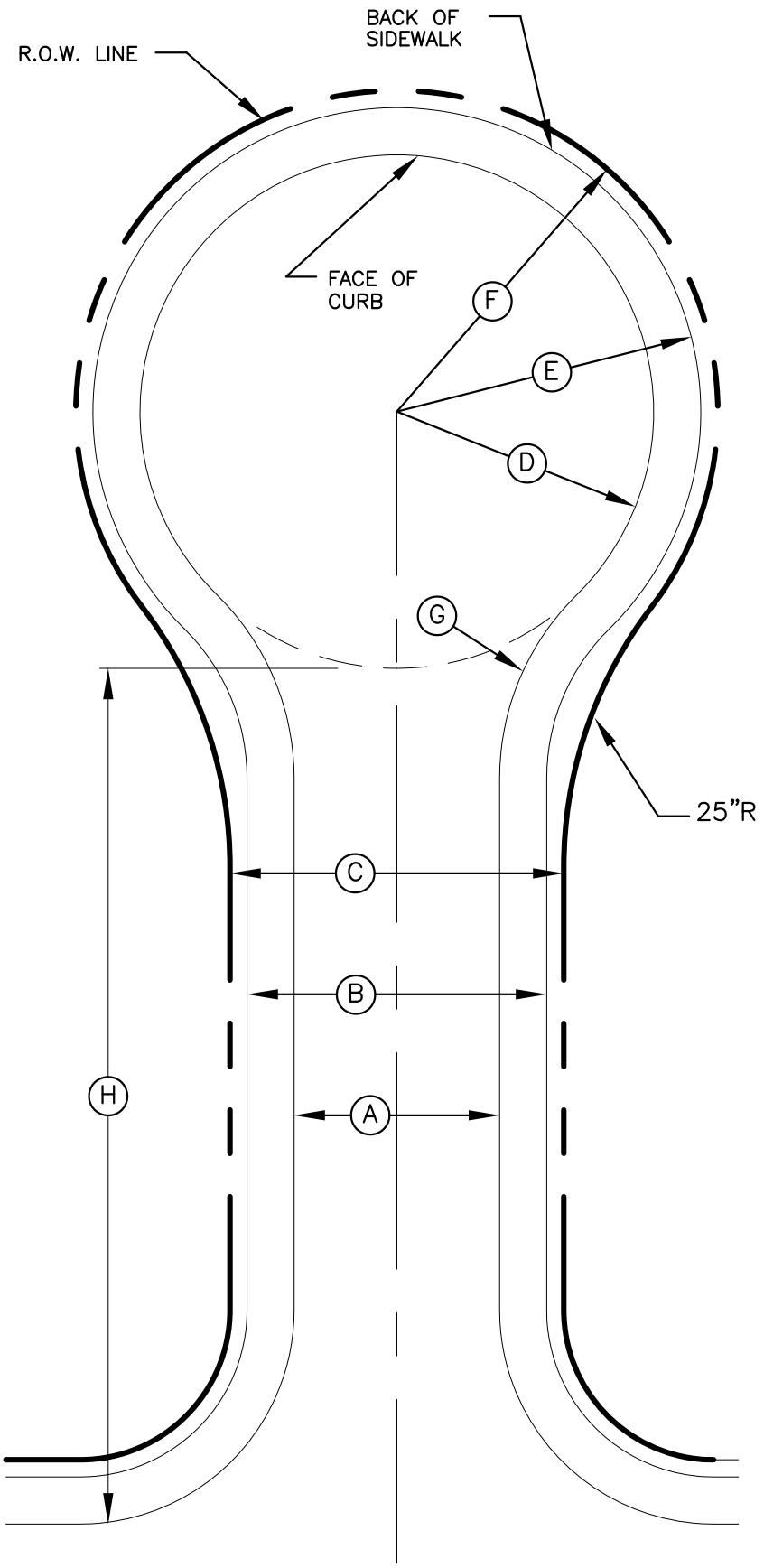

(A) VARIES 24' TO 48'+
SEE STD PLANS 300, 301 & 302

(B) VARIES 35' TO 59'+
SEE STD PLANS 300, 301 & 302

(C) VARIES 40' TO 80'+
SEE STD PLANS 300, 301 & 302

(D) VARIES 30' TO 45'
PER BELOW:

(H) STREET LENGTH	(D) MIN RADIUS
0'–150'	30'
151'–300'	35'
301'–500'	40'
501'–750'	45'
OVER 750'	SPECIAL APPROVAL REQUIRED

(E) 35.5' MIN. – LOCAL ACCESS STREETS AND SHORT SUBDIVISION STREETS

51.5' MIN – ARTERIAL CLASSIFICATIONS

(F) 40' MIN. – LOCAL ACCESS STREETS AND SHORT SUBDIVISION STREETS

55' MIN – ARTERIAL CLASSIFICATIONS

(G) CURB FACE RADIUS TO BE SAME AS RADIUS (D)

CITY OF EVERETT
PUBLIC WORKS DEPARTMENT

TYPICAL CUL–DE–SAC

3/27/1996
Date:

304
COE Std Dwg:

T:\ACad\eps-coe design & constr specs for development\CURRENT\std detail dwgs\Dwg Files\STD304.dwg, 2/21/2014 9:04:57 AM
T:\ACad\EPS-COE Design & Constr Specs for Development\CURRENT\STD DETAIL DWGS\Dwg Files\STD304.dwg <304> FEB 12 2008 12:09:11

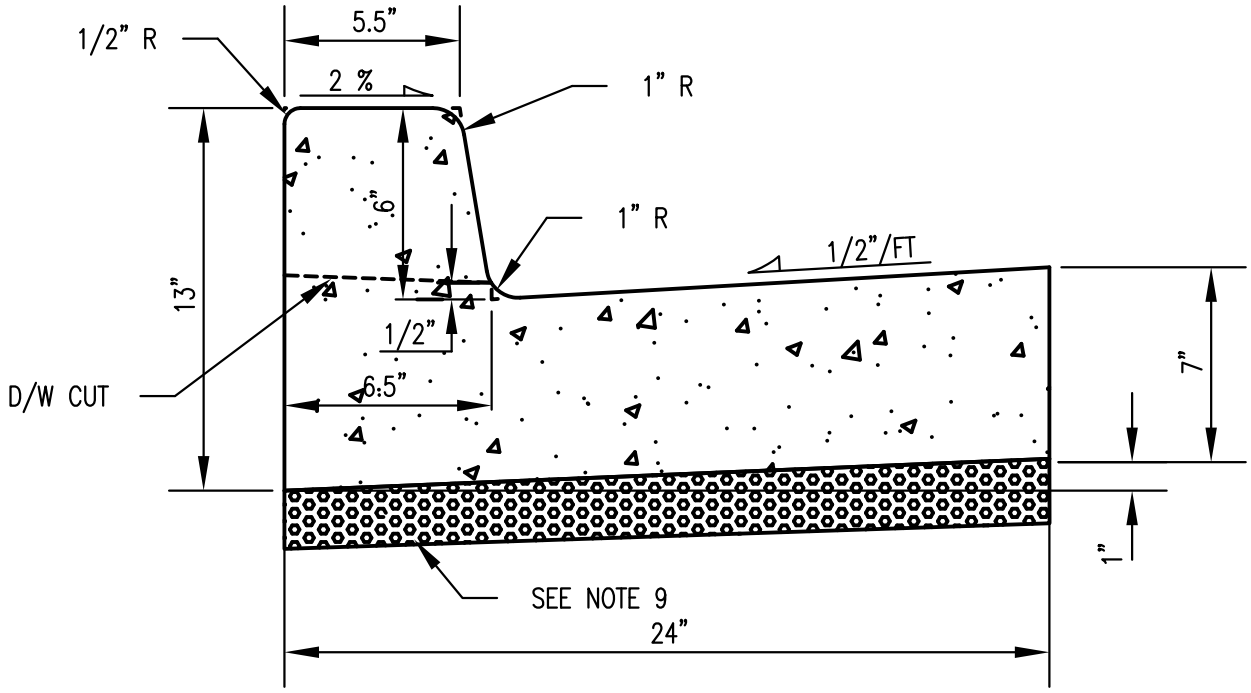

TYPICAL SECTION

NOTES

1. FORMS SHALL BE TRUE TO LINE AND GRADE AND SECURELY STAKED.
2. DUMMY JOINTS SHALL BE PLACED ON 15 FOOT CENTERS. DUMMY JOINTS SHALL BE 3/8" x 1-1/2".
3. THRU JOINTS SHALL BE PLACED ADJACENT TO CATCH BASINS, INLETS AND AT POINTS OF TANGENCY ON STREETS, ALLEY AND DRIVEWAY RETURNS. MAXIMUM SPACING SHALL BE 30 FT. PRE-MOLDED JOINT FILLER SHALL BE 3/8" WIIDE AND CONFORM TO AASHTO DESIGN M213.
4. ALL JOINTS SHALL BE CLEAN AND EDGED.
5. CONCRETE SHALL BE COMMERCIAL MIX AS CALLED OUT IN WSDOT STD SPECS.
6. STEEL FORMS MUST BE USED ON TANGENT SECTIONS. WOOD FORMS MAY BE USED ON CURVED SECTIONS.
7. FINISH SHALL BE LIGHT BROOM FINISH.
8. THE FINISHED CURB SHALL BE SPRAYED WITH A TRANSPARENT CURING COMPOUND AND COVERED BY WATERPROOF PAPER OR PLASTIC MEMBRANE IN THE EVENT OF RAIN OR OTHER UNSUITABLE WEATHER. CURING TIME SHALL BE A MINIMUM OF 72 HOURS.
9. ALL CURB AND GUTTER SHALL BE PLACED ON A MIN OF 2" OF CRUSHED SURFACING TOP COURSE.

EVERETT **CITY OF EVERETT PUBLIC WORKS DEPARTMENT**	CEMENT CONCRETE CURB AND GUTTER TYPE "A-1"	7-1-2013 Date: 305A COE Std Dwg:

T:\ACad\eps-coe design & constr specs for development\CURRENT\std detail dwgs\Dwg Files\STD305A.dwg, 2/21/2014 9:05:48 AM

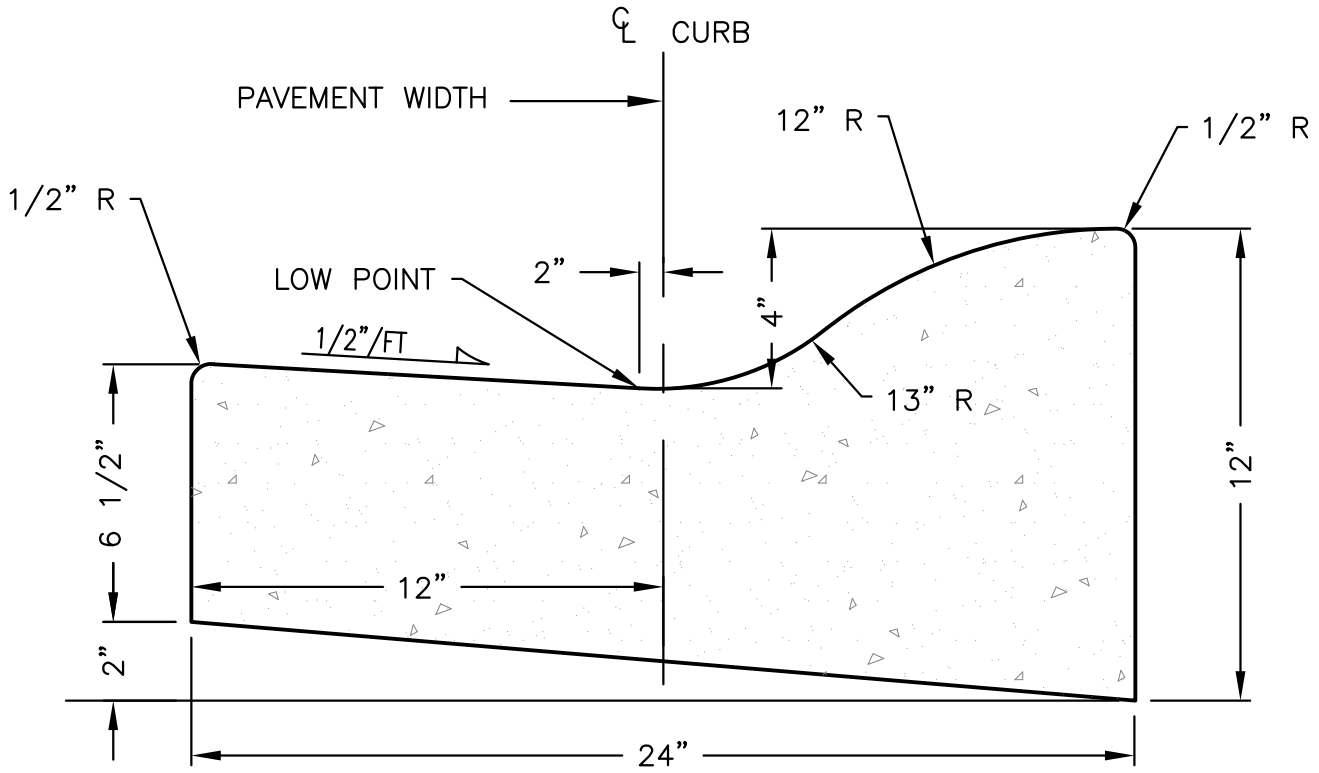

INDUSTRIAL USE ONLY

NOTES

1. ROLLED CURB AND GUTTER MAY ONLY BE USED IN HIGHLY INDUSTRIALIZED AREAS AND ONLY WITH WRITTEN APPROVAL OF THE CITY ENGINEER.
2. FORMS SHALL BE TRUE TO LINE AND GRADE AND SECURELY STAKED.
3. THRU JOINTS SHALL BE PLACED ADJACENT TO CATCH BASINS, INLETS, CURB RETURNS, ALLEYS, OR A MAXIMUM SPACING OF 30 FEET.
4. DUMMY JOINTS SHALL BE PLACED EVERY 15 FEET. DUMMY JOINTS SHALL BE 3/8" x 1 1/2".
5. THRU JOINTS SHALL BE 3/8" WIDE PRE-MOLDED JOINT FILLER.
6. ALL JOINTS SHALL BE CLEANED AND EDGED.
7. CONCRETE SHALL BE COMERCIAL MIX AS CALLED OUT IN WSDOT STD SPECS.
8. STEEL FORMS ONLY MAY BE USED ON TANGENT SECTIONS, WOOD FORMS MAY BE USED ON CURVED SECTIONS.
9. FINISH SHALL BE LIGHT BROOM.
10. CURB IS TO BE SPRAYED WITH TRANSPARENT CURING COMPOUND.
11. ALL SIDEWALKS POURED BEHIND ROLL CURB IN INDUSTRIAL APPLICATIONS SHALL BE 6" MIN THICK OVER 2" MIN OF CRUSHED SURFACING TOP COURSE WITH TOP OF ROCK COMPACTED TO 95% OF MAXIMUM DENSITY.

EVERETT **CITY OF EVERETT PUBLIC WORKS DEPARTMENT**	CEMENT CONCRETE ROLLED CURB AND GUTTER	7-2-2013 Date: 305B COE Std Dwg:

T:\ACad\eps-coe design & constr specs for development\CURRENT\std detail dwgs\Dwg Files\STD305B.dwg, 2/21/2014 9:06:32 AM

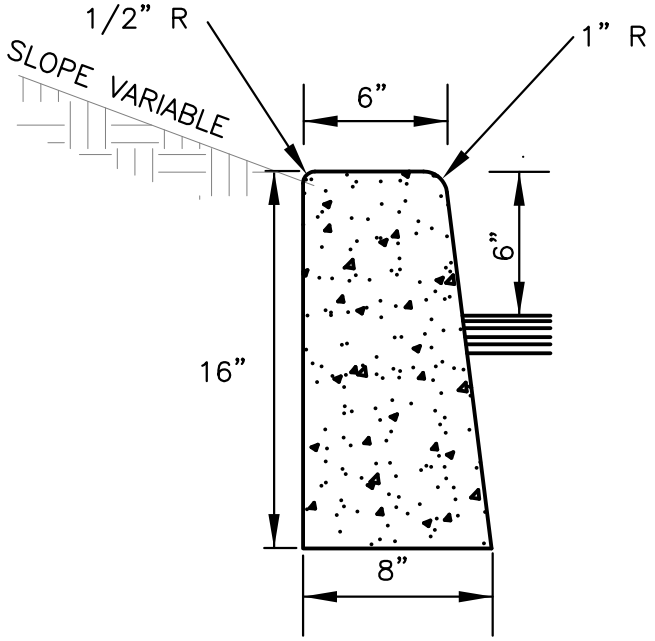

TYPE E-1 CURB

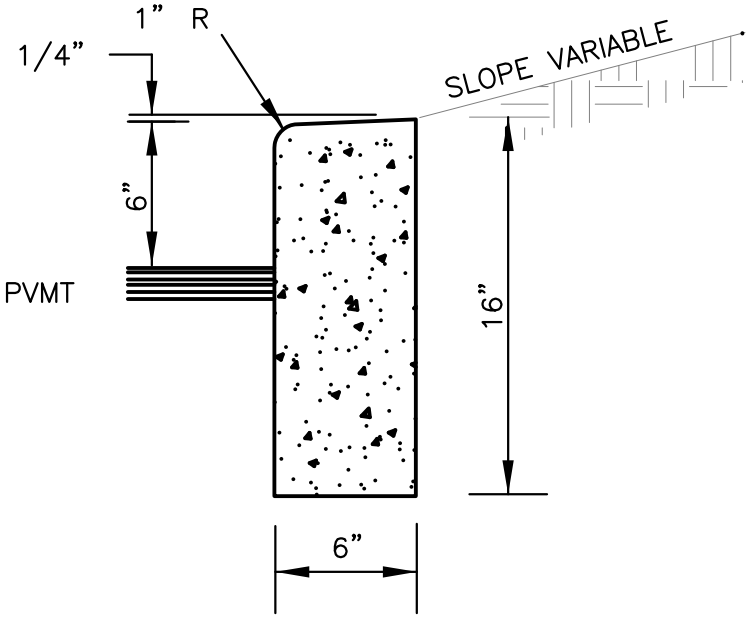

TYPE E-2 CURB

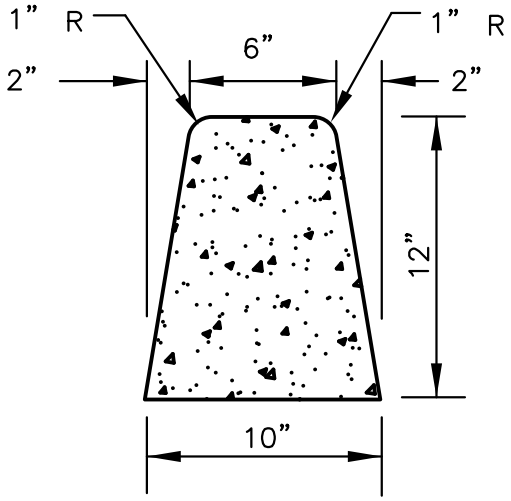

TYPE E-3 CURB

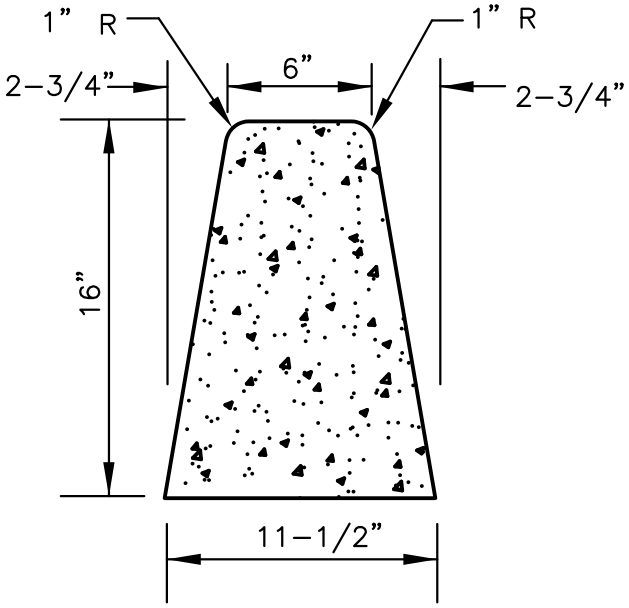

TYPE E-4 CURB

CITY OF EVERETT
PUBLIC WORKS DEPARTMENT

CEMENT CONCRETE CURB
TYPE: E-1, E-2, E-3 & E-4

1-3-2011
Date:

305C
COE Std Dwg:

T:\ACad\eps-coe design & constr specs for development\CURRENT\std detail dwgs\Dwg Files\STD305C.dwg, 2/21/2014 9:07:25 AM

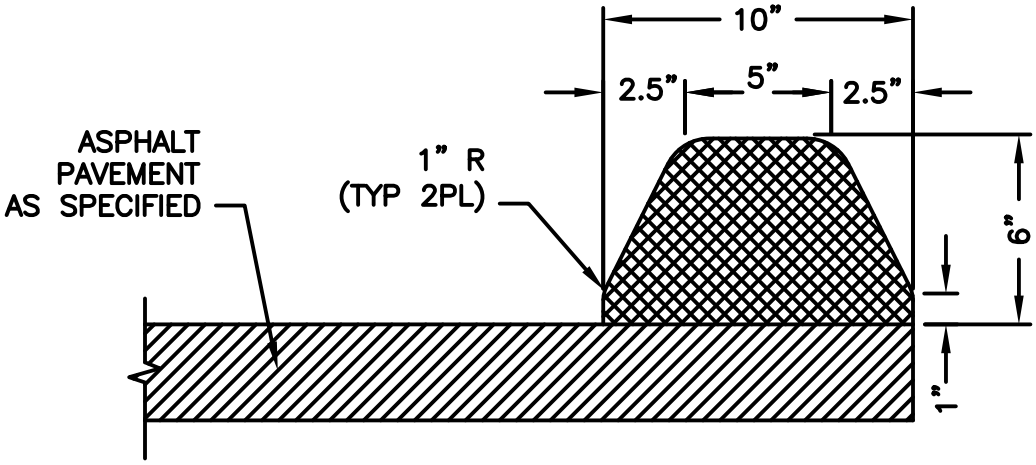

EXTRUDED ASPHALT CONCRETE CURB

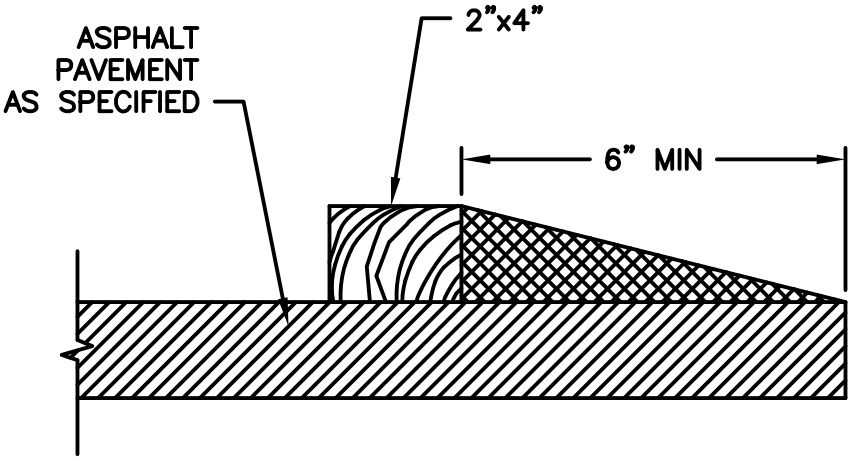

ASPHALT WEDGE CURB

CITY OF EVERETT
PUBLIC WORKS DEPARTMENT

EVERETT

EXTRUDED ASPHALT CONCRETE SECTIONS

8-26-2008
Date:

305D
COE Std Dwg:

T:\ACad\eps-coe design & constr specs for development\CURRENT\std detail dwgs\Dwg Files\STD305D.dwg, 2/21/2014 9:08:12 AM

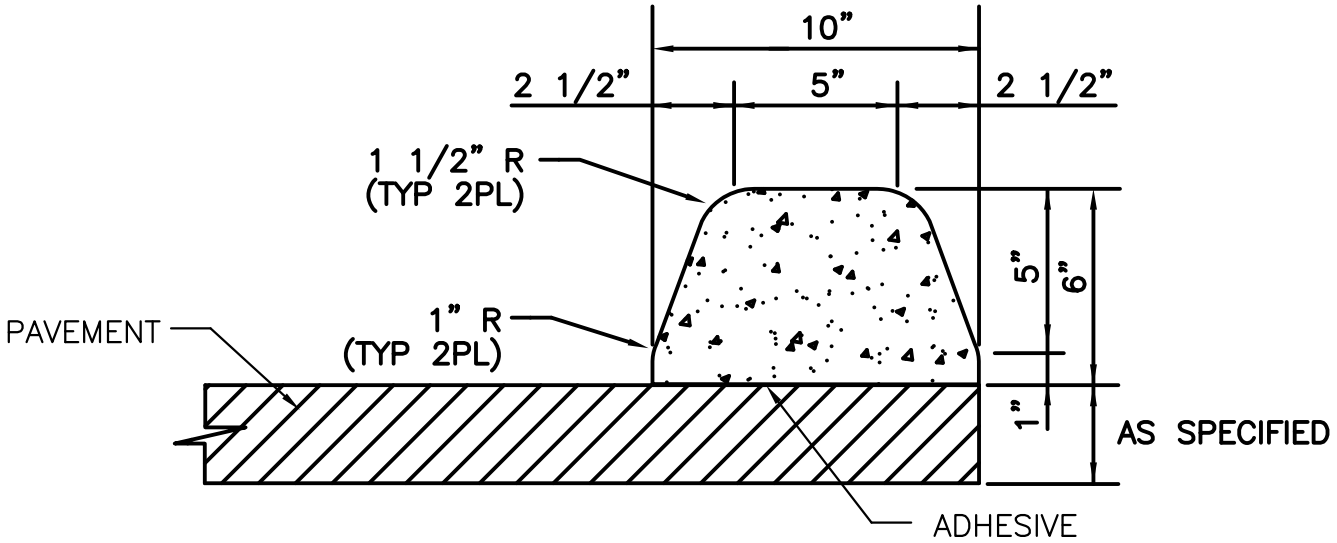

EXTRUDED CEMENT CONCRETE CURB SECTION

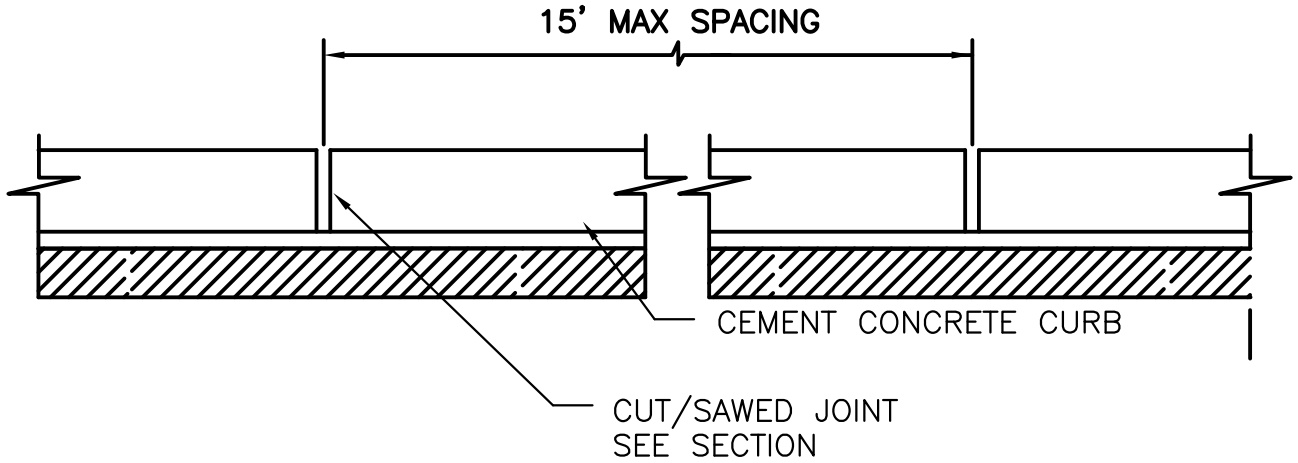

JOINT SPACING

NOTES:

1. CUT OR SAWED JOINTS SHALL BE PLACED NOT TO EXCEED 15' ON CENTER. THRU JOINTS SHALL BE PLACED ONLY AT POINTS OF TANGENCY ON STREET ALLEY AND DRIVEWAY RETURNS AND WHERE THRU JOINTS OCCUR IN THE PAVEMENT SLAB.

2. CONCRETE SHALL BE COMMERCIAL MIX AS CALLED OUT IN WSDOT STD SPECS.

3. CONCRETE CURBS WILL BE ANCHORED TO THE EXISTING PAVEMENT BY USING AN ADHESIVE. THE ADHESIVE SHALL MEET THE REQUIREMENTS OF SECTION 9-26.1 OF THE WSDOT/APWA STANDARD SPECIFICATIONS FOR TYPE II EPOXY BONDING AGENT.

CITY OF EVERETT PUBLIC WORKS DEPARTMENT	EXTRUDED CEMENT CONCRETE CURB	3-19-2008 Date: 305E COE Std Dwg:

T:\ACad\eps-coe design & constr specs for development\CURRENT\std detail dwgs\Dwg Files\STD305E.dwg, 2/21/2014 9:10:09 AM

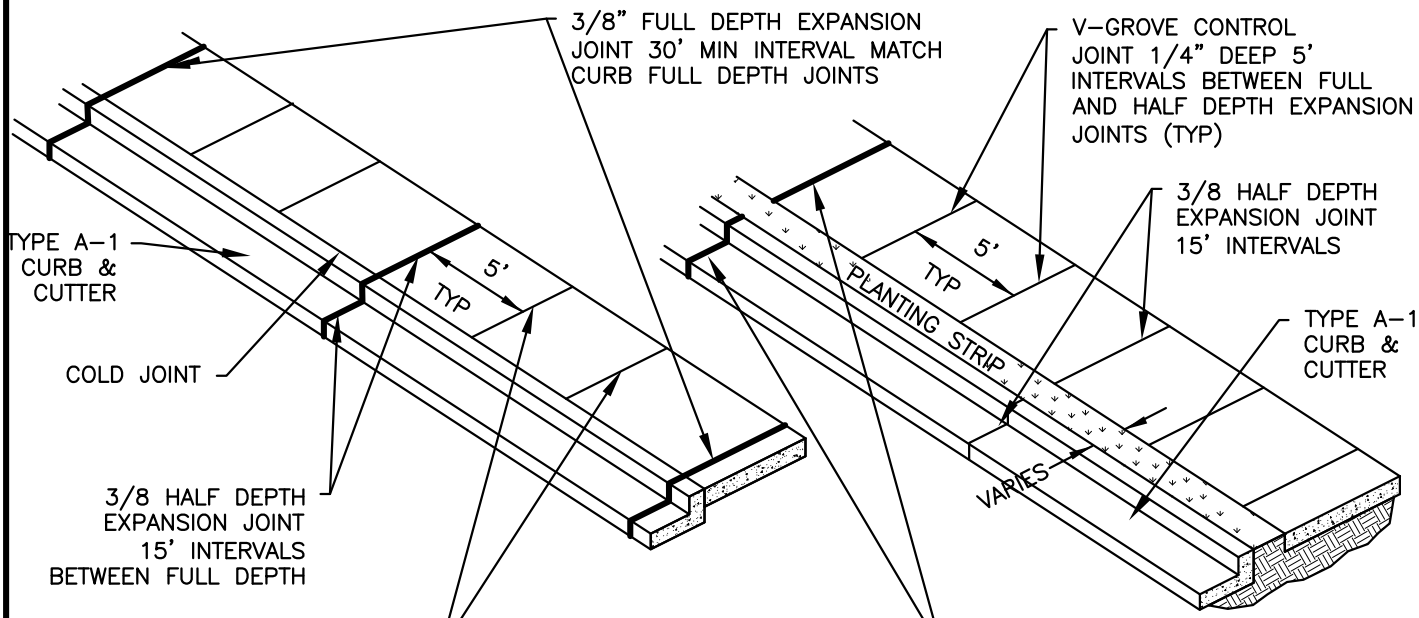

PLAN VIEWS

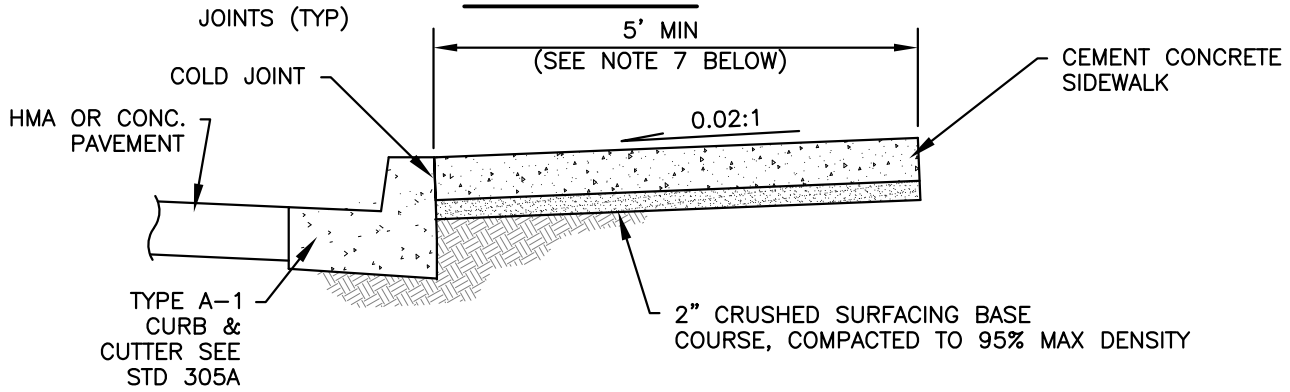

TYPICAL SECTION

NOTES

1. SIDEWALKS SHALL BE A MINIMUM OF 4" THICK, AND SHALL BE COMMERCIAL MIX CONCRETE AS CALLED OUT IN WSDOT STD SPECS., WITH AIR ENTRAINMENT (MIN 4.5 %, MAX 6.5 %).
2. SIDEWALK FULL DEPTH EXPANSION JOINTS SHALL GENERALLY BE PLACED TO MATCH THOSE IN ADJACENT CURB & GUTTER (WITHOUT PLANTER STRIP). MAXIMUM SPACING OF 30 FEET, FINAL SPACING DETERMINATION SHALL BE DECIDED BY THE INSPECTOR IN THE FIELD.
3. SUBGRADE SHALL BE COMPACTED TO NOT LESS THAN 95% OF MAXIMUM DENSITY.
4. SIDEWALK SHALL BE AT LEAST 6" THICK IN DRIVEWAYS AND BEHIND ROLL-CURB (STD 305B).
5. THE FINISHED SIDEWALK SHALL BE SPRAYED WITH A TRANSPARENT CURING COMPOUND COVERED BY WATERPROOF PAPER OR PLASTIC SHEETING IN THE EVENT OF RAIN OR OTHER INCLEMENT WEATHER. CURING TIME SHALL BE FOR A MINIMUM OF 72 HOURS.
6. ALL JOINTS SHALL BE CLEANED AND EDGED WITH AN EDGER HAVING A 1/4" RADIUS.
7. SIDEWALKS ARE 5' MIN. WIDE, EXCEPT 6' ALONG ARTERIALS, IN COMMERCIAL AREAS, OR AS APPROVED BY THE CITY ENGINEER.

EVERETT **CITY OF EVERETT PUBLIC WORKS DEPARTMENT**	CEMENT CONCRETE CURB & SIDEWALK DETAILS SHEET 1 OF 2	7-2-2013 Date: 306 COE Std Dwg:

T:\ACad\eps-coe design & constr specs for development\CURRENT\std detail dwgs\Dwg Files\STD306.dwg, 2/21/2014 9:10:59 AM

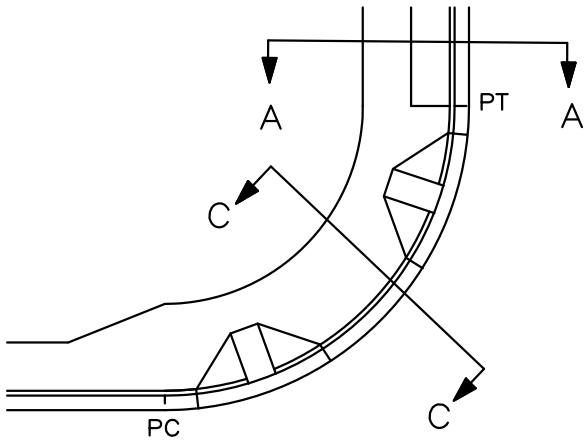

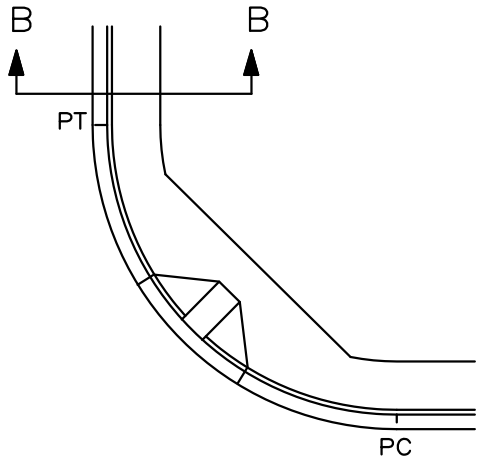

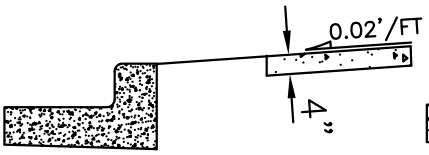

SECTION A–A

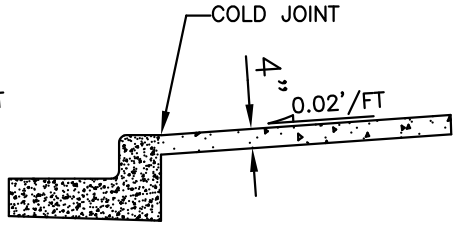

SECTION B–B

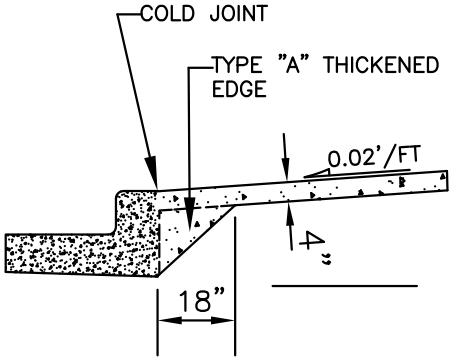

SECTION C–C

NOTES:

1. "V" GROOVES SHALL BE SPACED TO CORRESPOND TO THE MARKINGS IN EXISTING SIDEWALKS, OR AS DIRECTED BY THE ENGINEER.
2. ALL UTILITY POLES, METER BOXES AND OTHER OBSTRUCTIONS SHALL HAVE FULL DEPTH 3/8" EXPANSION JOINT MATERIAL PLACED AROUND THEM.
3. ALL SIDEWALK EDGES SHALL HAVE 1/2"RADIUS.
4. MINIMUM WIDTH OF SIDEWALK IS 5' (NOT INCLUDING THE WIDTH OF THE CURB).
5. THICKENED EDGES ARE REQUIRED FOR SIDEWALKS AT CORNERS, BUT NOT ON TANGENT SECTIONS. ALL CURB RAMPS SHALL HAVE A THICKENED EDGE TO THE DEPTH OF THE ADJACENT CURB, INCLUDING CURB RAMPS BUILT ON TANGENT SECTIONS OF SIDEWALK. MONOLITHIC CURB AND SIDEWALK CONFORMING TO STD DWT 306 DO NOT REQUIRE ADDITIONAL THICKENED EDGE.
6. FOR CURB RAMP DETAILS SEE STANDARD PLANS 310A, 310B AND 310C.

CITY OF EVERETT PUBLIC WORKS DEPARTMENT	CEMENT CONCRETE SIDEWALK AT CORNERS	7-2-2013 Date: 306A COE Std Dwg:

T:\ACad\eps-coe design & constr specs for development\CURRENT\std detail dwgs\Dwg Files\STD306A.dwg, 2/21/2014 9:11:45 AM

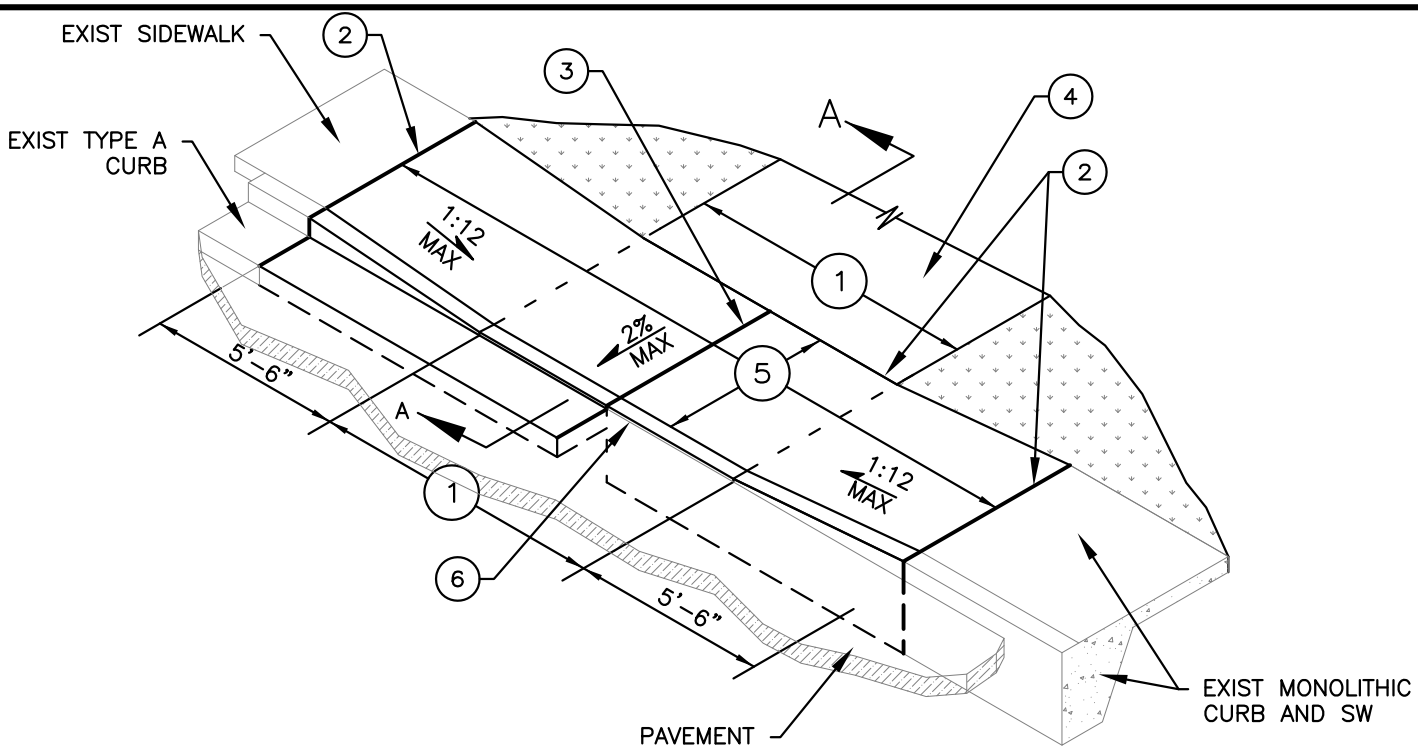

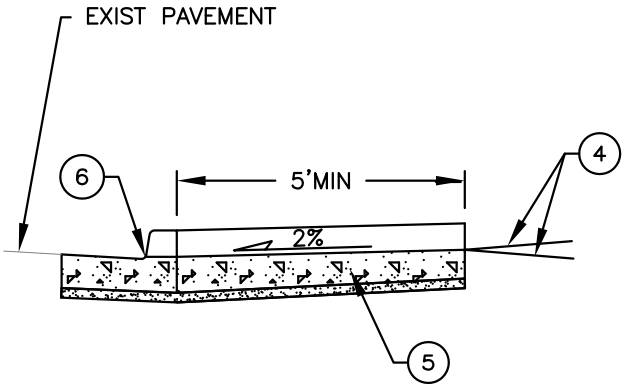

SECTION A–A

USING TYPE A–1 CURB

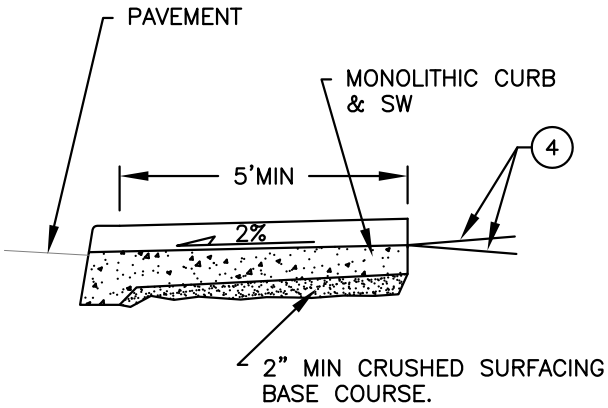

SECTION A–A

USING MONOLITHIC CURB & SW

NOTES

1. EQUALS WIDTH OF DRIVEWAY AT PROPERTY LINE.
2. 3/8" WIDE FULL DEPTH EXPANSION JOINT.
3. 3/8" WIDE FULL DEPTH EXPANSION JOINT IF NOTE 1 ABOVE IS 15' OR GREATER.
4. WITHIN THE CITY RIGHT–OF–WAY THE DRIVEWAY SHALL BE SURFACED WITH ASPHALT OR CONCRETE.
5. THE DRIVEWAY RAMP INCLUDING WING RAMPS SHALL BE CONCRETE COMMERCIAL MIX AS CALLED OUT IN WSDOT STD SPECS., A MIN OF 6" THICK AND PLACED ON A MINIMUM OF 2" CRUSHED SURFACING BASE COURSE COMPACTED TO 95% MAXIMUM DENSITY.
6. MAINTAIN 1/2" LIP AT GUTTER.

CITY OF EVERETT PUBLIC WORKS DEPARTMENT	CEMENT CONCRETE DRIVEWAY RAMP TYPE–1	7–2–2013 Date: 307 COE Std Dwg:

T:\ACad\eps-coe design & constr specs for development\CURRENT\std detail dwgs\Dwg Files\STD307.dwg, 2/21/2014 9:17:39 AM

LOWERING BACK OF SIDEWALK "A" (IN)	LENGTH OF TRANSITION "B" (FT)
3	3
4	4
5	5

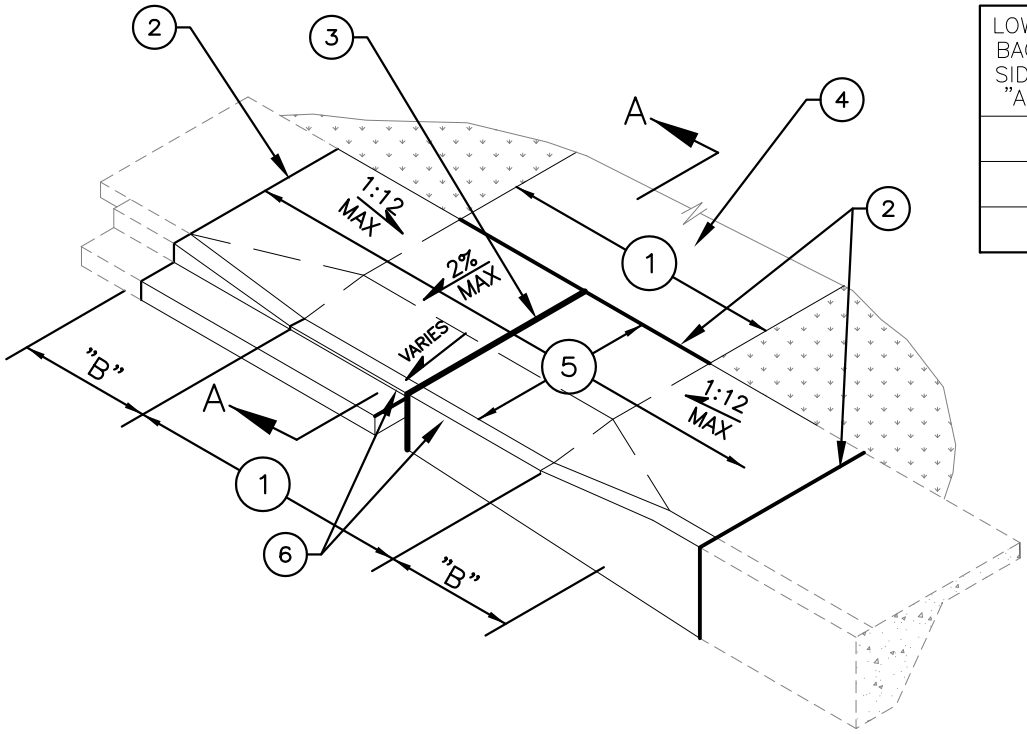

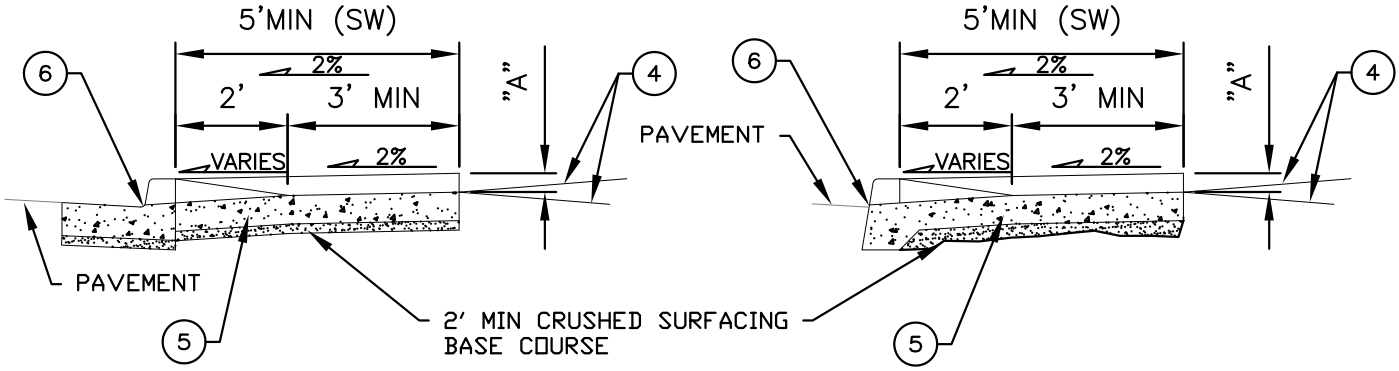

SECTION A–A
USING TYPE A–1 CURB

SECTION A–A
USING MONOLITHIC CURB & SW

NOTES

1. EQUALS WIDTH OF DRIVEWAY AT PROPERTY LINE.
2. 3/8" WIDE FULL DEPTH EXPANSION JOINT.
3. 3/8" WIDE FULL DEPTH EXPANSION JOINT IF NOTE 1 ABOCE IS 15' OR GREATER.
4. WITHIN THE CITY RIGHT–OF–WAY THE DRIVEWAY SHALL BE SURFACED WITH ASPHALT OR CONCRETE.
5. THE DRIVEWAY RAMP INCLUDING WING RAMPS SHALL BE CONCRETE COMMERCIAL MIX AS CALLED OUT IN WSDOT STD SPECS., A MIN OF 6" THICK AND PLACED ON A MINIMUM OF 2" CRUSHED SURFACING BASE COURSE COMPACTED TO 95% MAXIMUM DENSITY.
6. MAINTAIN 1/2" LIP AT GUTTER.

CITY OF EVERETT
PUBLIC WORKS DEPARTMENT

CEMENT CONCRETE DRIVEWAY RAMP TYPE–2

7–2–2013
Date:

308
COE Std Dwg:

T:\ACad\eps-coe design & constr specs for development\CURRENT\std detail dwgs\Dwg Files\STD308.dwg, 2/21/2014 9:18:26 AM

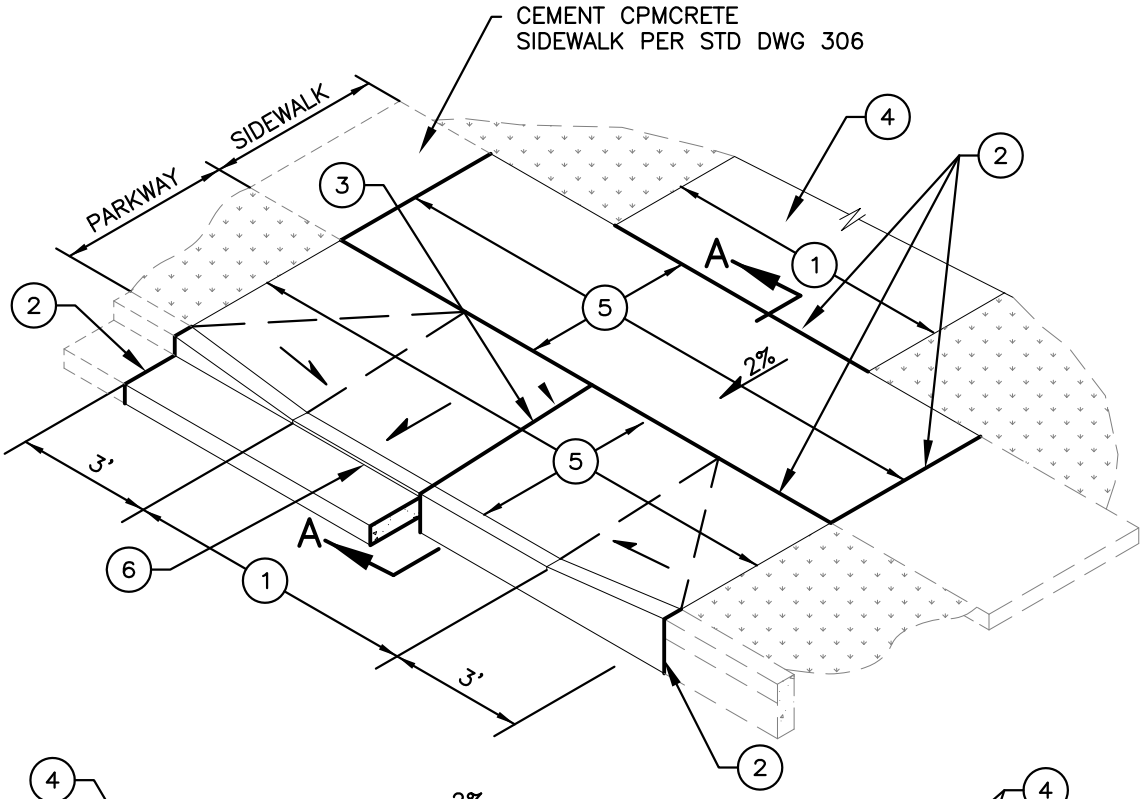

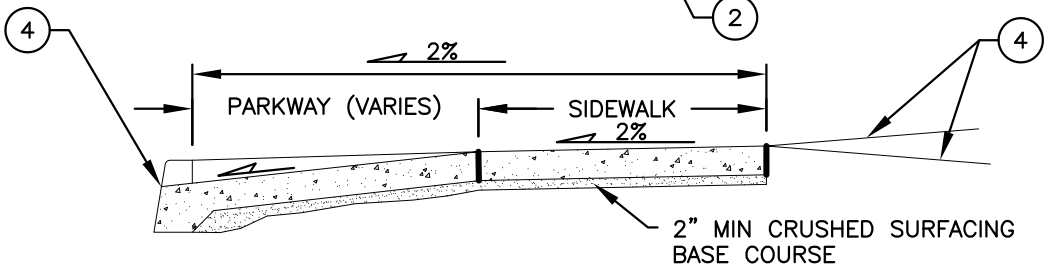

SECTION A–A

USING MONOLITHIC CURB & SW

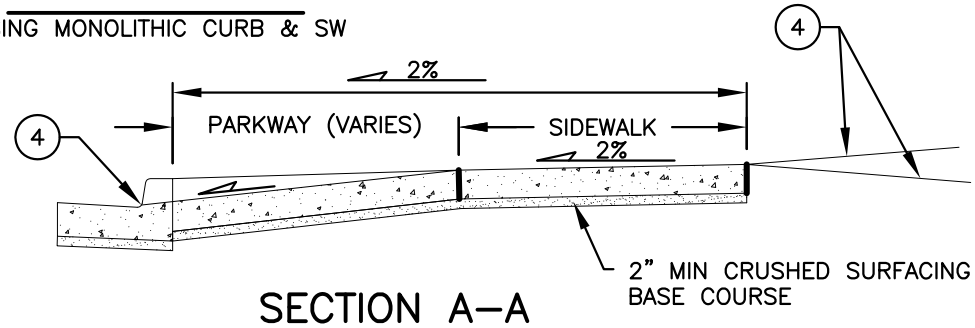

SECTION A–A

USING TYPE A–1 CURB

NOTES

1. EQUALS WIDTH OF DRIVEWAY AT PROPERTY LINE.
2. 3/8" WIDE FULL DEPTH EXPANSION JOINT.
3. 3/8" WIDE FULL DEPTH EXPANSION JOINT IF NOTE 1 ABOVE IS 15' OR GREATER.
4. WITHIN THE CITY RIGHT–OF–WAY THE DRIVEWAY SHALL BE SURFACED WITH ASPHALT OR CONCRETE.
5. THE DRIVEWAY RAMP INCLUDING WING RAMPS SHALL BE CONCRETE COMMERCIAL MIX AS CALLED OUT IN WSDOT STD SPECS., A MIN OF 6" THICK AND PLACED ON A MINIMUM OF 2" CRUSHED SURFACING BASE COURSE COMPACTED TO 95% MAXIMUM DENSITY.
6. MAINTAIN 1/2" LIP AT GUTTER.

CITY OF EVERETT PUBLIC WORKS DEPARTMENT	CEMENT CONCRETE DRIVEWAY RAMP TYPE–3	7–2–2013 Date: 309 COE Std Dwg:

T:\ACad\eps-coe design & constr specs for development\CURRENT\std detail dwgs\Dwg Files\STD309.dwg, 2/21/2014 9:19:32 AM

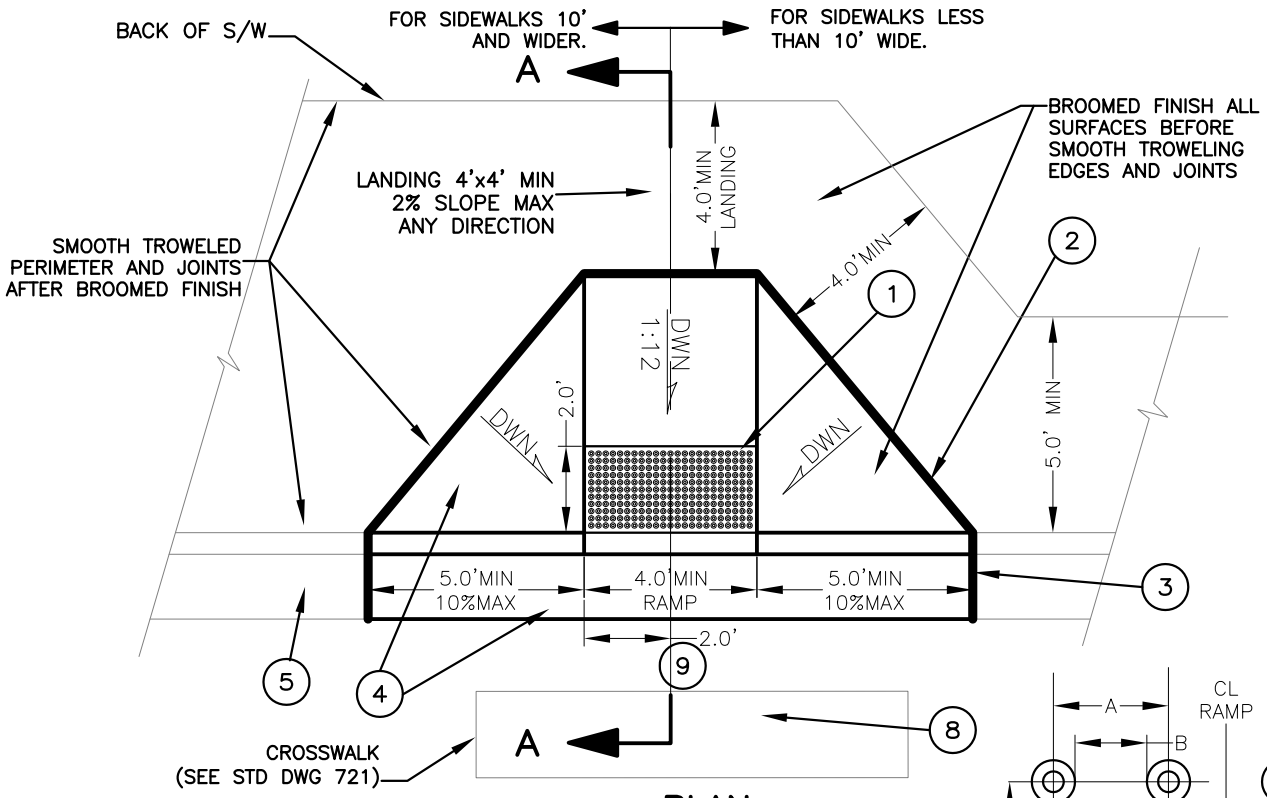

PLAN

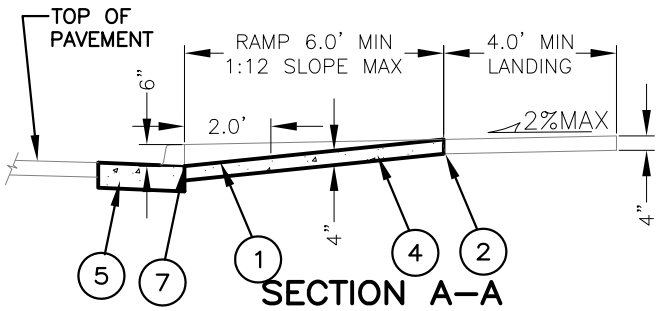

SECTION A–A

	MIN.	MAX.
A	1 5/8"	2 3/8"
B	5/8"	1 1/2"
C	7/16"	3/4"
D	7/8"	1 7/16"

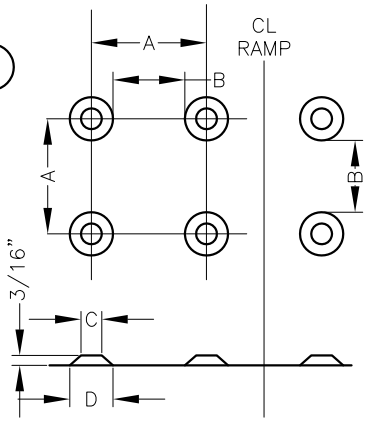

DETECTABLE WARNING PATTERN

NOTES: (#)

1 DETECTABLE WARNING PATTERN AREA SHALL BE YELLOW IN COMPLIANCE WITH WSDOT/APWA STANDARD SPEC SECTION 8–14.3(3).

2 CURB RAMPS SHALL NOT BE POURED INTEGRAL WITH SIDEWALK AND SHALL BE ISOLATED FROM ADJACENT SIDEWALK BY A 3/8" FULL DEPTH EXPANSION JOINT.

3 GUTTER SECTION AT CURB RAMP SHALL NOT BE POURED INTERGAL WITH ADJACENT GUTTER SECTIONS AND SHALL BE ISOLATED BY A 3/8" FULL DEPTH EXPANSION JOINT.

4 CURB RAMP AND GUTTER SECTION AT CURB RAMP MAY BE POURED AS AN INTERGAL SECTION.

5 TYPE A–1 INTEGRAL CURB AND GUTTER PER CITY STD DWG 305A.

6 FOR RETROFIT INSTALLATION SAWCUT AND REMOVE EXISTING SIDEWALK, CURB AND GUTTER SECTION ALONG NEW EXPANSION JOINT LOCATION. SAWCUT EXISTING PAVEMENT AS REQUIRED FOR FORMING OF NEW CURB AND GUTTER. PATCH PAVEMENT AS REQUIRED.

7 FLUSH WITH GUTTER (NO LIP PERMITTED)

8 MID BLOCK CROSSINGS OF STREETS WITH STOP CONTROL ARE ALLOWED 2% MAX CROSS SLOPE AND 5% RUNNING SLOPE. CROSSINGS WITHOUT STOP CONTROL ARE LIMITED TO A 5% MAX SLOPE IN EITHER DIRECTION. REFER TO GUIDELINES FOR ACCESSIBLE PUBLIC RIGHTS–OF–WAY.

9 A MIN OF 4' OF THE RAMP WIDTH MUST FALL WITHIN THE CROSS WALK SERVED BY THE RAMP.

CITY OF EVERETT
PUBLIC WORKS DEPARTMENT

TYPE A CURB RAMP

Date: 5/19/2008

COE Std Dwg: 310A

T:\ACad\eps-coe design & constr specs for development\CURRENT\std detail dwgs\Dwg Files\STD310A.dwg, 2/21/2014 9:20:31 AM

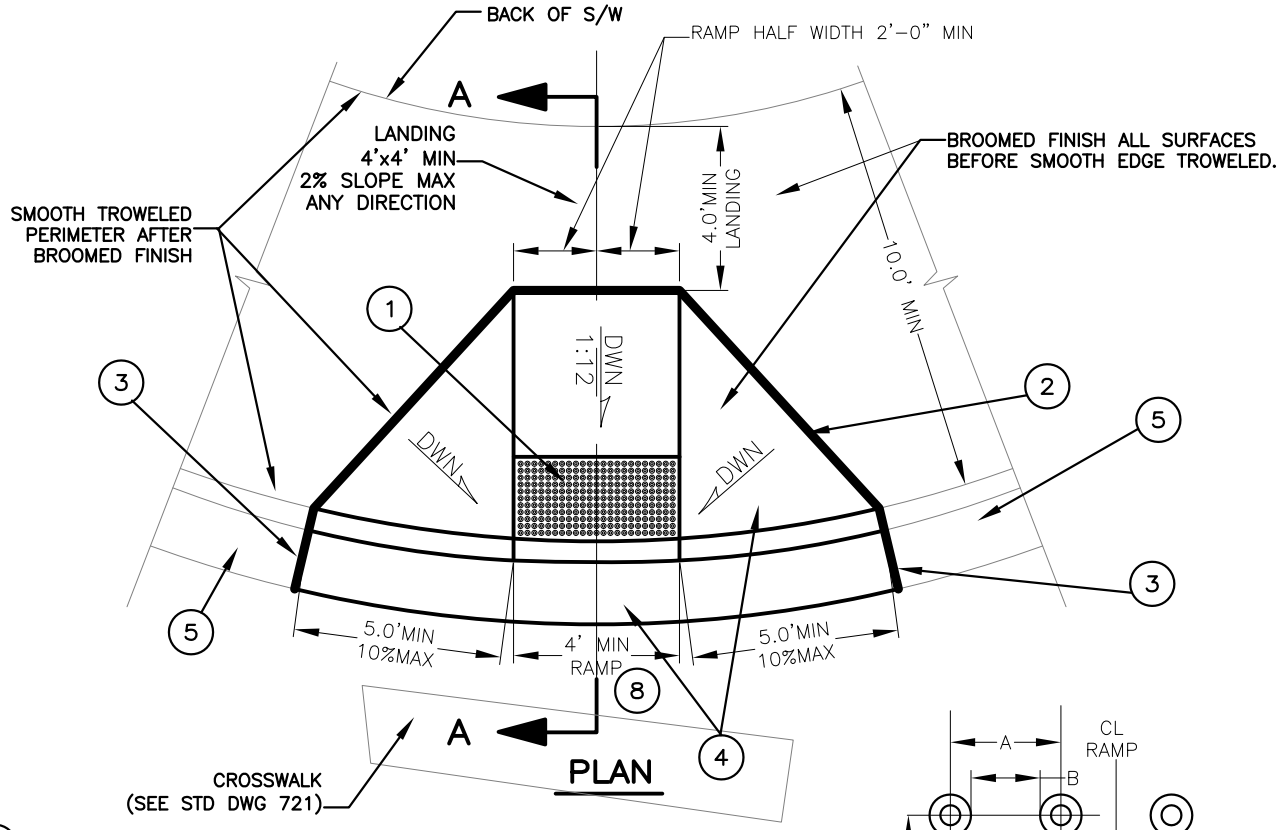

PLAN

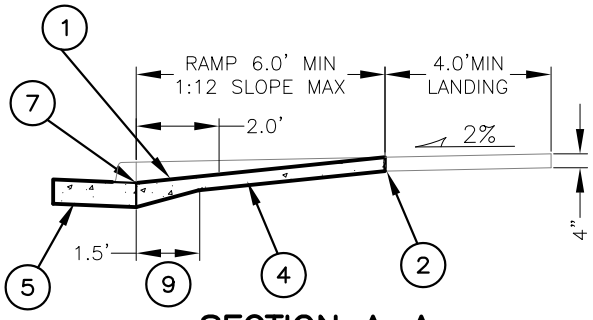

SECTION A–A

	MIN.	MAX.
A	1 5/8"	2 3/8"
B	5/8"	1 1/2"
C	7/16"	3/4"
D	7/8"	1 7/16"

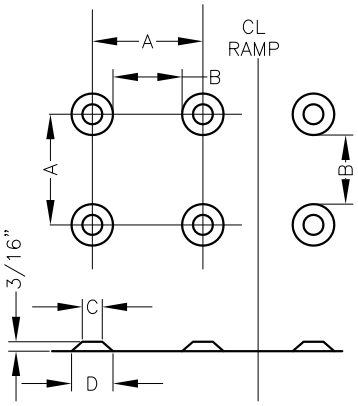

DETECTABLE WARNING PATTERN

NOTES:

1 DETECTABLE WARNING PATTERN AREA SHALL BE YELLOW IN COMPLIANCE WITH WSDOT/APWA STANDARD SPEC SECTION 8–14.3(3).

2 CURB RAMPS SHALL NOT BE POURED INTEGRAL WITH SIDEWALK AND SHALL BE ISOLATED FROM ADJACENT SIDEWALK BY A 3/8" FULL DEPTH EXPANSION JOINT.

3 GUTTER SECTION AT CURB RAMP SHALL NOT BE POURED INTERGAL WITH ADJACENT GUTTER SECTIONS AND SHALL BE ISOLATED BY A 3/8" FULL DEPTH EXPANSION JOINT.

4 CURB RAMP AND GUTTER SECTION AT CURB RAMP MAY BE POURED AS AN INTERGAL SECTION.

5 TYPE A–1 INTEGRAL CURB AND GUTTER PER CITY STD DWG 305A.

6 FOR RETROFIT INSTALLATION SAWCUT AND REMOVE EXISTING SIDEWALK, CURB AND GUTTER SECTION ALONG NEW EXPANSION JOINT LOCATION. SAWCUT EXISTING PAVEMENT AS REQUIRED FOR FORMING OF NEW CURB AND GUTTER. PATCH PAVEMENT AS REQUIRED.

7 FLUSH WITH GUTTER (NO LIP PERMITTED)

8 A MIN OF 4' OF THE RAMP WIDTH MUST FALL WITHIN THE CROSS WALK SERVED BY THE RAMP.

9 THICKEN EDGE TO FULL DEPTH OF ADJACENT CURB SECTION.

CITY OF EVERETT
PUBLIC WORKS DEPARTMENT

TYPE B CURB RAMP

5/19/2008
Date:

310B
COE Std Dwg:

T:\ACad\eps-coe design & constr specs for development\CURRENT\std detail dwgs\Dwg Files\STD310B.dwg, 2/21/2014 9:21:37 AM

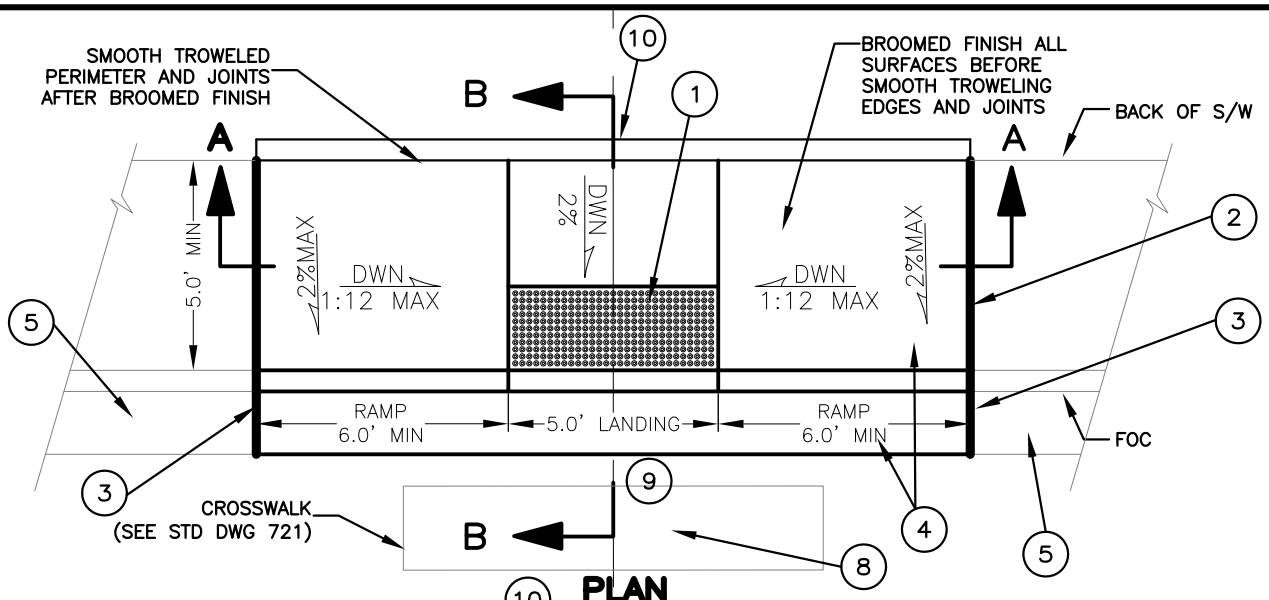

PLAN

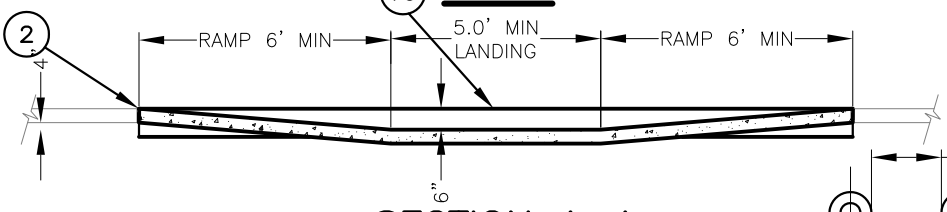

SECTION A–A

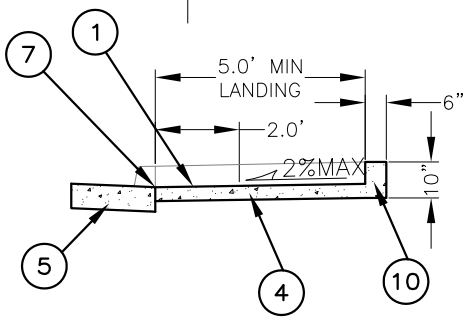

SECTION B–B

	MIN.	MAX.
A	1 5/8"	2 3/8"
B	5/8"	1 1/2"
C	7/16"	3/4"
D	7/8"	1 7/16"

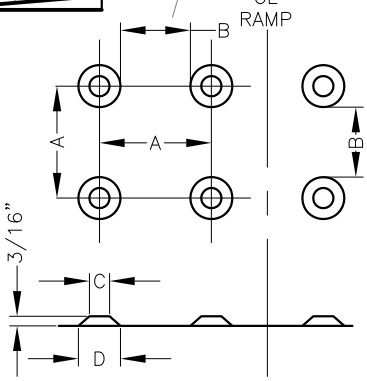

DETECTABLE WARNING PATTERN

NOTES:

1 DETECTABLE WARNING PATTERN AREA SHALL BE YELLOW IN COMPLIANCE WITH WSDOT/APWA STANDARD SPEC SECTION 8–14.3(3).

2 CURB RAMPS SHALL NOT BE POURED INTEGRAL WITH SIDEWALK AND SHALL BE ISOLATED FROM ADJACENT SIDEWALK BY A 3/8" FULL DEPTH EXPANSION JOINT.

3 GUTTER SECTION AT CURB RAMP SHALL NOT BE POURED INTEGRAL WITH ADJACENT GUTTER SECTIONS AND SHALL BE ISOLATED BY A 3/8" FULL DEPTH EXPANSION JOINT.

4 CURB RAMP AND GUTTER SECTION AT CURB RAMP MAY BE POURED AS AN INTEGRAL SECTION.

5 TYPE A–1 INTEGRAL CURB AND GUTTER PER CITY STD DWG 305A.

6 FOR RETROFIT INSTALLATION SAW CUT AND REMOVE EXISTING SIDEWALK, CURB AND GUTTER SECTION ALONG NEW EXPANSION JOINT LOCATION. SAW CUT EXISTING PAVEMENT AS REQUIRED FOR FORMING OF NEW CURB AND GUTTER. PATCH PAVEMENT AS REQUIRED.

7 FLUSH WITH GUTTER (NO LIP PERMITTED)

8 MID BLOCK CROSSINGS OF STREETS WITH STOP CONTROL ARE ALLOWED 2% MAX CROSS SLOPE AND 5% RUNNING SLOPE. CROSSINGS WITHOUT STOP CONTROL ARE LIMITED TO A 5% MAX SLOPE IN EITHER DIRECTION. REFER TO GUIDELINES FOR ACCESSIBLE PUBLIC RIGHTS–OF–WAY.

9 A MIN OF 4' OF THE RAMP WIDTH MUST FALL WITHIN THE CROSS WALK SERVED BY THE RAMP.

10 6"W X 10"H X 17'/18'L POURED IN PLACE CONCRETE CURB. INTEGRAL WITH RAMP.

CITY OF EVERETT
PUBLIC WORKS DEPARTMENT

TYPE C CURB RAMP

5/19/2011
Date:

310C
COE Std Dwg:

T:\ACad\eps-coe design & constr specs for development\CURRENT\std detail dwgs\Dwg Files\STD310C.dwg, 2/21/2014 9:22:30 AM

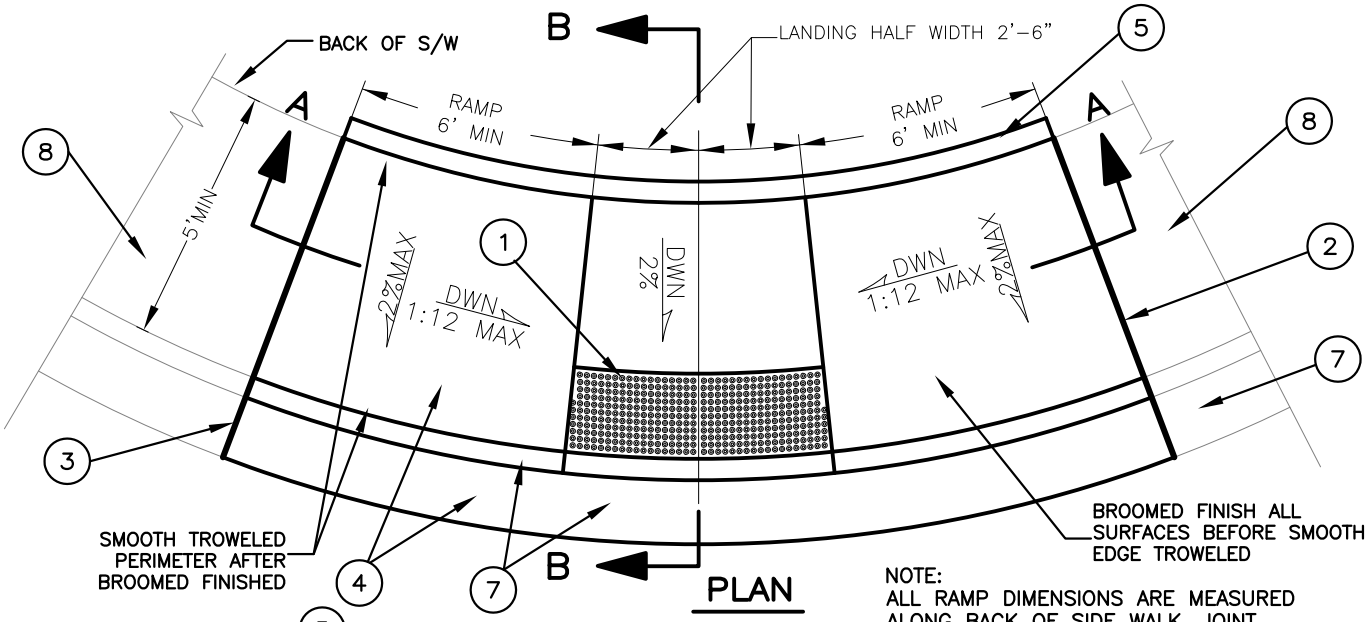

PLAN

NOTE:
ALL RAMP DIMENSIONS ARE MEASURED ALONG BACK OF SIDE WALK. JOINT LINES ARE RADIAL FROM CENTER.

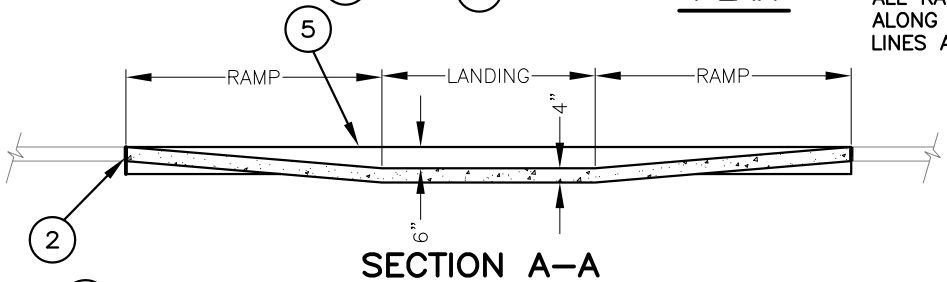

SECTION A–A

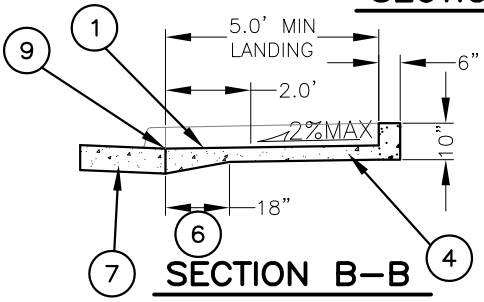

SECTION B–B

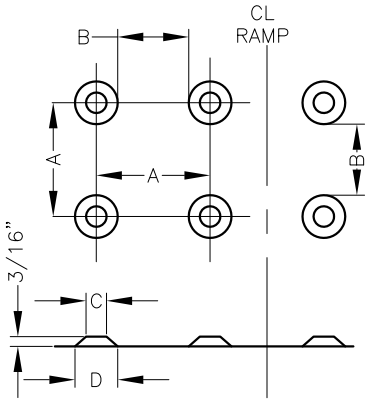

	MIN.	MAX.
A	1 5/8"	2 3/8"
B	5/8"	1 1/2"
C	7/16"	3/4"
D	7/8"	1 7/16"

DETECTABLE WARNING PATTERN

NOTES: (#)

1 DETECTABLE WARNING PATTERN AREA SHALL BE YELLOW IN COMPLIANCE WITH WSDOT/APWA STANDARD SPEC SECTION 8–14.3(3).

2 CURB RAMPS SHALL NOT BE POURED INTEGRAL WITH SIDEWALK AND SHALL BE ISOLATED FROM ADJACENT SIDEWALK BY A 3/8" FULL DEPTH EXPANSION JOINT.

3 GUTTER SECTION AT CURB RAMP SHALL NOT BE POURED INTERGAL WITH ADJACENT GUTTER SECTIONS AND SHALL BE ISOLATED BY A 3/8" FULL DEPTH EXPANSION JOINT.

4 CURB RAMP AND GUTTER SECTION AT CURB RAMP MAY BE POURED AS AN INTERGAL SECTION.

5 6"W X 10"H X 17'/18'L POURED IN PLACE CONCRETE CURB. INTERGAL WITH RAMP.

6 THICKEN EDGE TO FULL DEPTH OF ADJACENT CURB SECTION.

7 TYPE A–1 INTEGRAL CURB AND GUTTER PER CITY STD DWG 305A.

8 FOR RETROFIT INSTALLATION SAWCUT AND REMOVE EXISTING SIDEWALK TO FIRST EXISTING JOINT EITHER SIDE OF NEW RAMP. SAWCUT AND REMOVE EXISTING CURB AND GUTTER SECTION AS REQUIRED. SAWCUT EXISTING PAVEMENT AS REQUIRED FOR FORMING OF NEW CURB AND GUTTER. PATCH PAVEMENT AS REQUIRED.

9 FLUSH WITH GUTTER (NO LIP PERMITTED)

CITY OF EVERETT
PUBLIC WORKS DEPARTMENT

TYPE D CURB RAMP

5/18/2008
Date:

310D
COE Std Dwg:

T:\ACad\eps-coe design & constr specs for development\CURRENT\std detail dwgs\Dwg Files\STD310D.dwg, 2/21/2014 9:26:43 AM

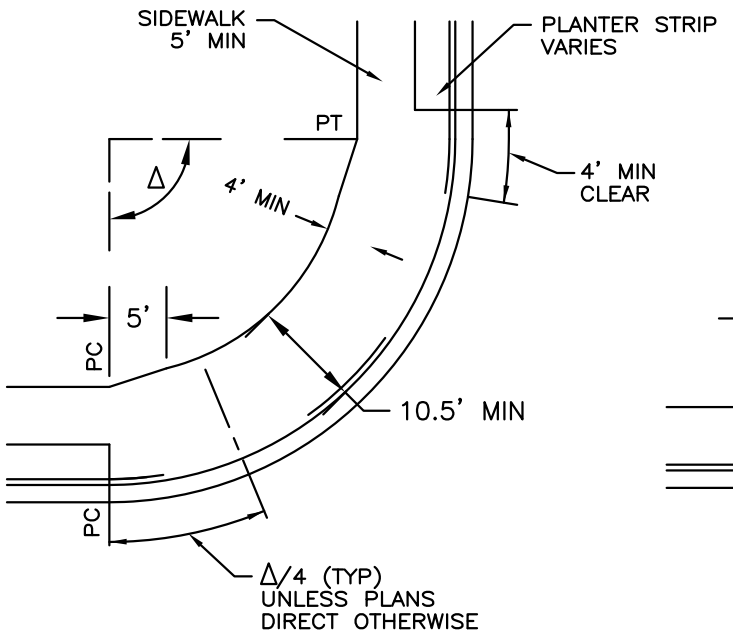

ALTERNATE "A"

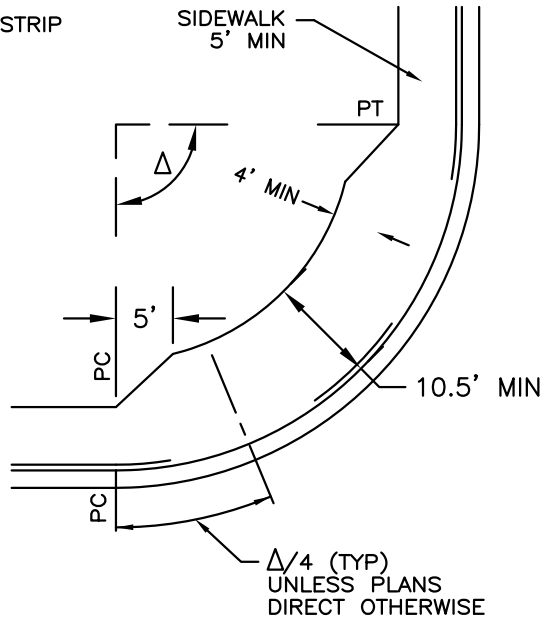

ALTERNATE "B"

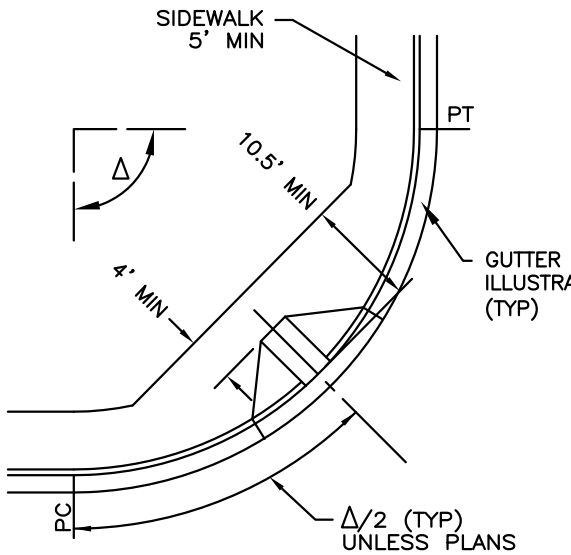

ALTERNATE "C"

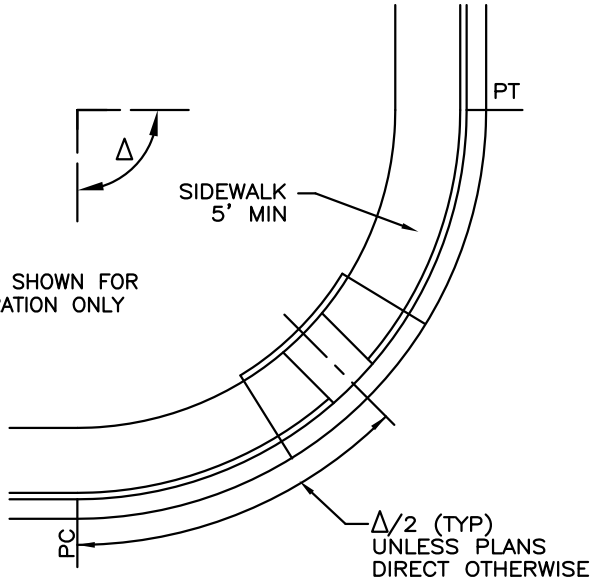

ALTERNATE "D"

NOTES:

1. ALTERNATES "A" & "B" FOR USE AT ARTERIAL/ARTERIAL AND ARTERIAL/LOCAL ACCESS INTERSECTIONS.
2. ALTERNATES "C" & "D" FOR USE AT LOCAL ACCESS/LOCAL ACCESS INTERSECTIONS OR AS APPROVED BY CITY ENGINEER.
3. FOR ALTERNATE "A", "B" AND "C" USE CURB RAMP PER STD DWGS 306A AND 310B.
4. FOR ALTERNATE "D" USE CURB RAMP PER STD DWGS 306A AND 310D.
5. THE USE OF ALTERNATE "C" & "D" SHALL NOT DIRECT THE WHEEL CHAIR INTO A THROUGH TRAFFIC LANE. USE OF ALTERNATE "A" & "B" MAY BE NECESSARY TO ACCOMPLISH THIS.
6. THE USE OF ALTERNATE "C" & "D" SHALL NOT DIRECT THE WHEEL CHAIR INTO A THROUGH TRAFFIC LANE. USE ALTERNATE "A' OR "B" MAY BE NECESSARY TO ACCOMPLISH THIS.

CITY OF EVERETT PUBLIC WORKS DEPARTMENT	TYPICAL CURB RAMP LOCATIONS	1-6-2011 Date:
		311 COE Std Dwg:

T:\ACad\eps-coe design & constr specs for development\CURRENT\std detail dwgs\Dwg Files\STD311.dwg, 2/21/2014 9:27:45 AM

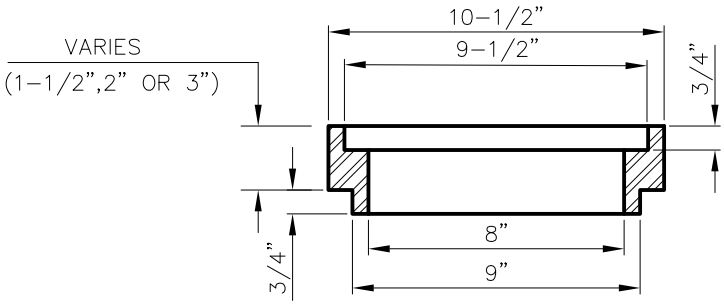

EXTENSION SECTION

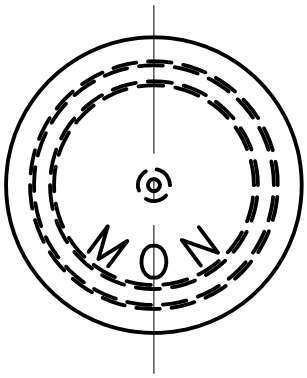

COVER PLAN

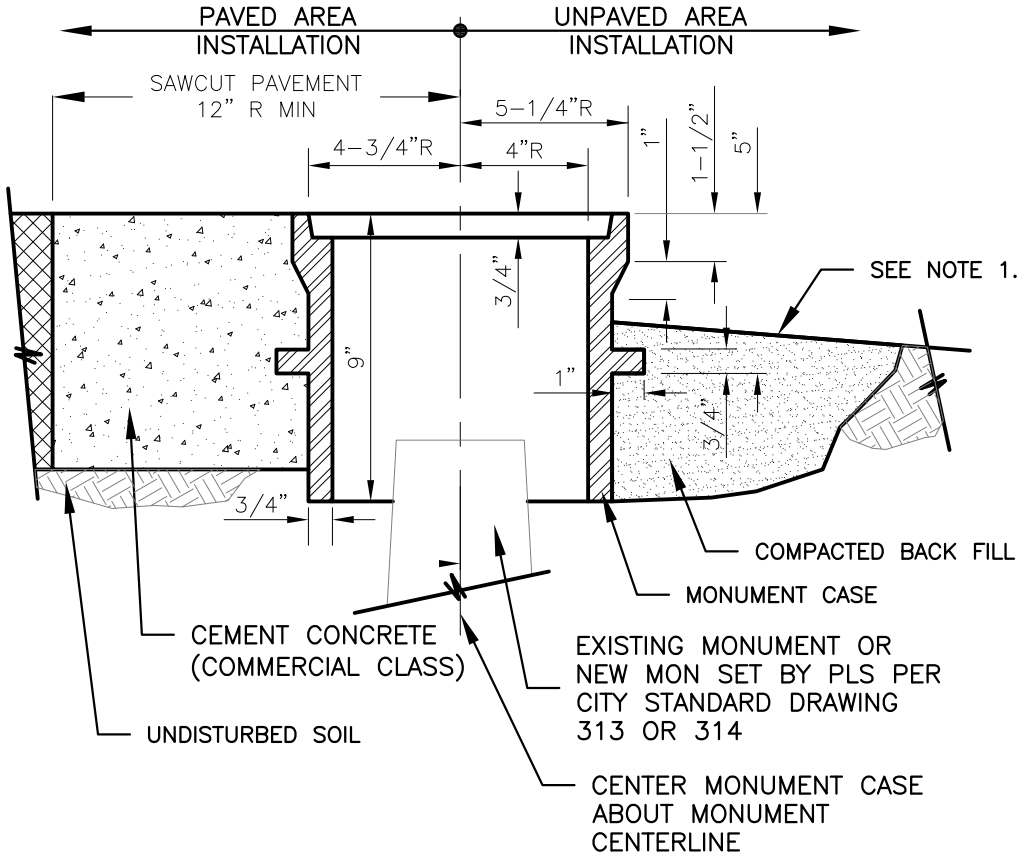

CASE SECTION

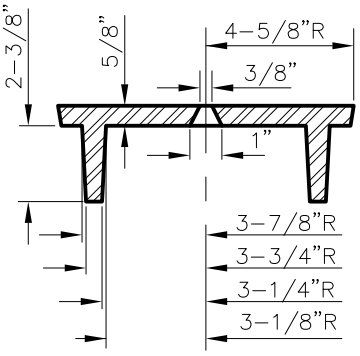

COVER SECTION

NOTES

1. MONUMENTS IN UN–IMPROVED AREAS SHALL BE 3" ABOVE GRADE.
2. MONUMENT CASE AND RISER SECTION SHALL BE CAST IRON PER ASTM–A48, CLASS 30, WITH BITUMINOUS COATING.
3. COVER SHALL BE CAST IRON PER ASTM–A48 CLASS 30. WITH BITUMINOUS COATING.
4. LEGEND ON COVER SHALL BE 1/8" RAISED INTEGRALLY CAST LETTERS 1" HIGH WITH A MIN FACE WIDTH OF 3/16".

CITY OF EVERETT **PUBLIC WORKS DEPARTMENT**	MONUMENT CASE AND COVER DESCRIPTION AND INSTALLATION	1–6–2011 Date: 312 COE Std Dwg:

T:\ACad\eps-coe design & constr specs for development\CURRENT\std detail dwgs\Dwg Files\STD312.dwg, 2/21/2014 9:25:25 AM

NOTES

THIS MONUMENT SHALL BE USED ONLY FOR CONTROL MONUMENTATION SURVEYS AT LOCATIONS AS APPROVED BY THE CITY SURVEYOR.

ORIENT BRASS CAP SO LETTERING CAN BE READ FROM SOUTH

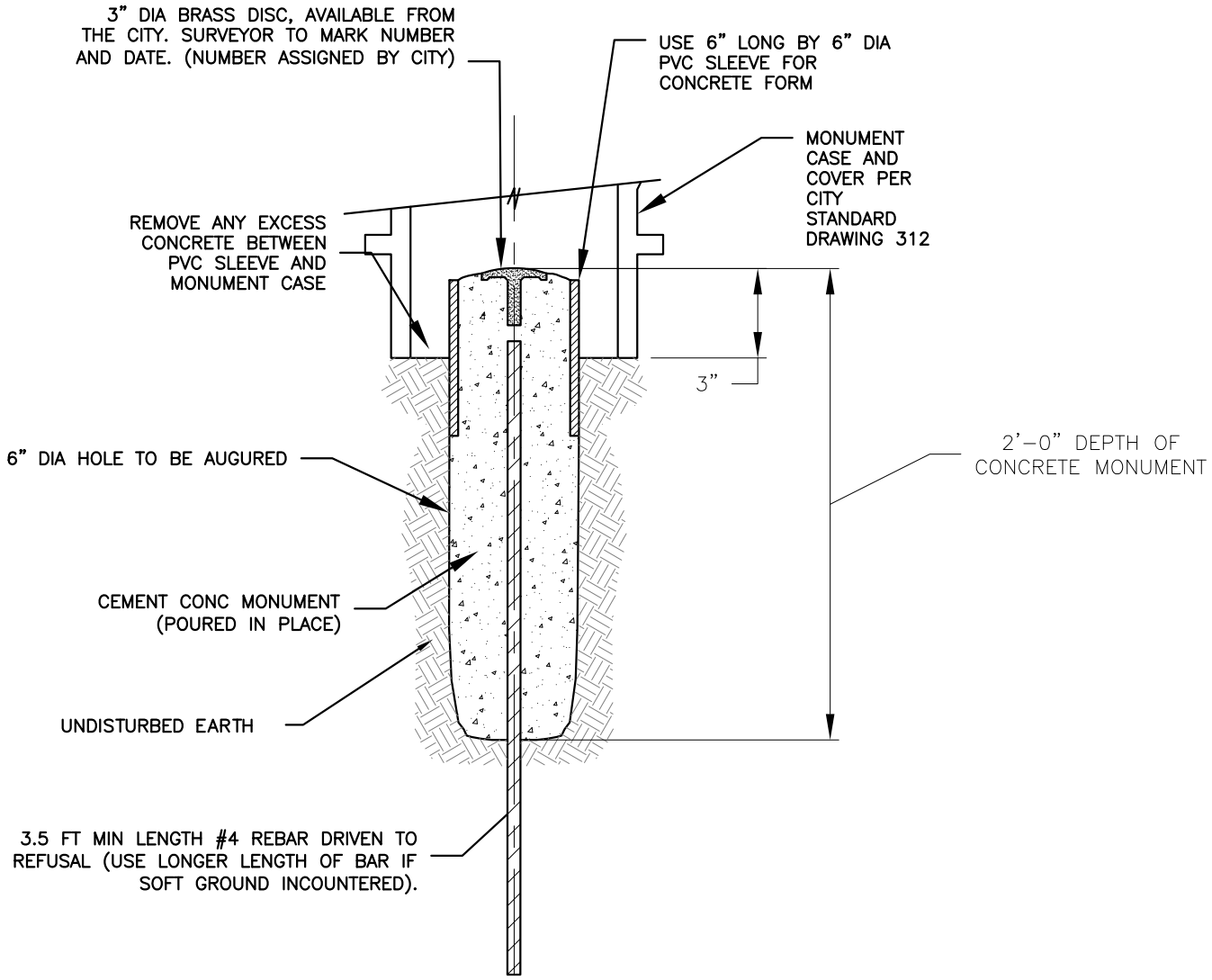

CITY OF EVERETT PUBLIC WORKS DEPARTMENT	SURVEY CONTROL MON. CAST IN PLACE SHEET 1 OF 3	7-2-2013 Date: 313 COE Std Dwg:

T:\ACad\eps-coe design & constr specs for development\CURRENT\std detail dwgs\Dwg Files\STD313.DWG, 2/21/2014 9:29:36 AM

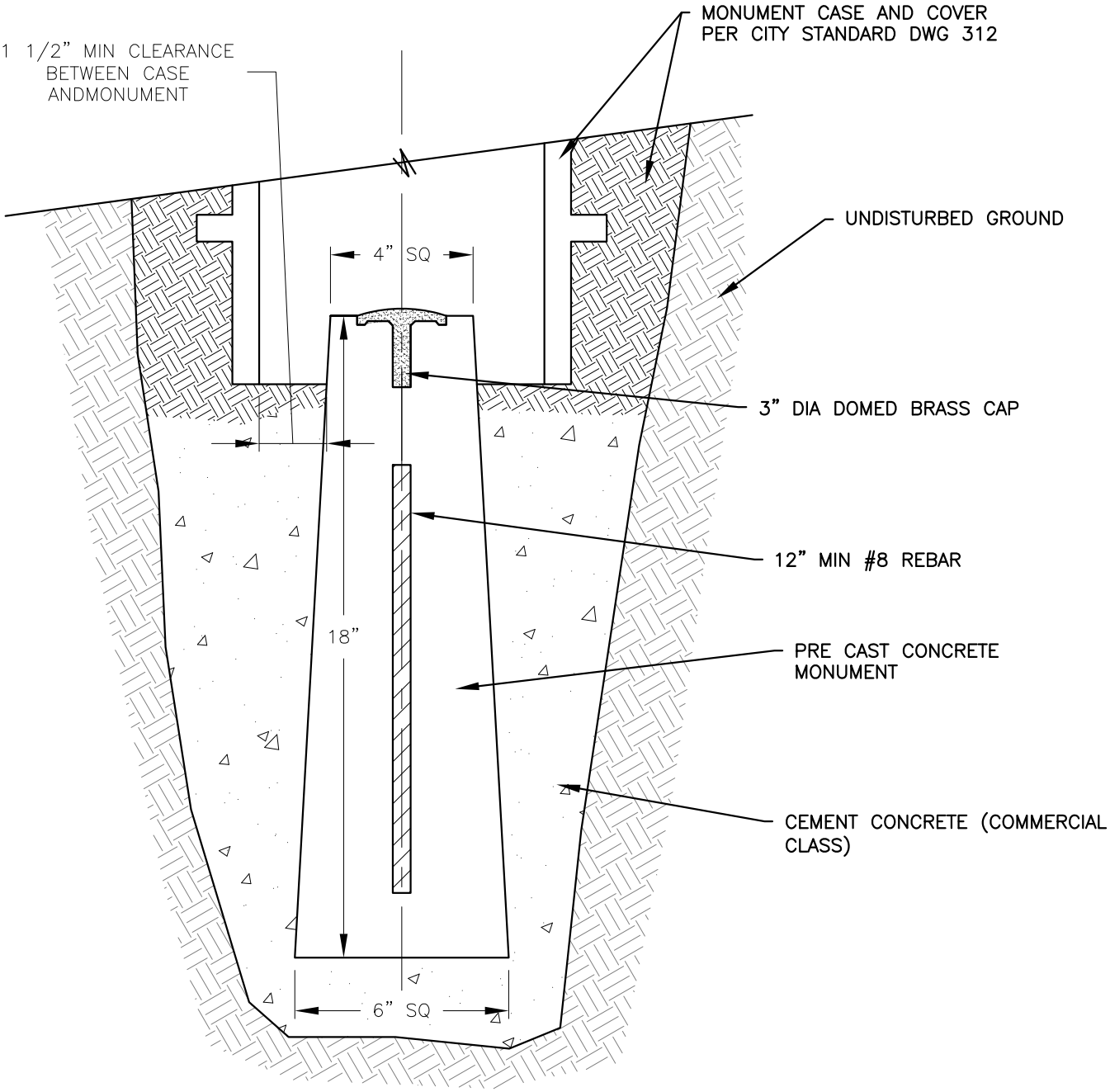

SECTION

NOTES

1. ALL NEW MONUMENTS SHALL BE PRECAST OR CAST IN PLACE COMMERCIAL CLASS CONC, WITH REBAR AND 3" DIA BRASS CAP.

CITY OF EVERETT **PUBLIC WORKS DEPARTMENT**	SURVEY CONTROL MON. PRECAST SHEET 2 OF 3	7-2-2013 Date: 313 COE Std Dwg:

T:\ACad\eps-coe design & constr specs for development\CURRENT\std detail dwgs\Dwg Files\STD313.DWG, 2/21/2014 9:30:04 AM

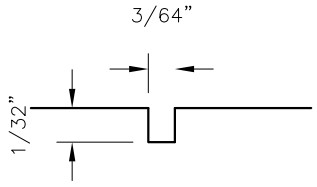

FOR 1/4" TEXT

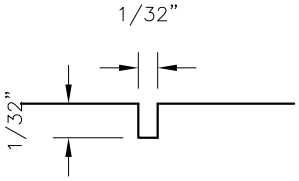

FOR 3/16" TEXT

GROOVE DETAIL

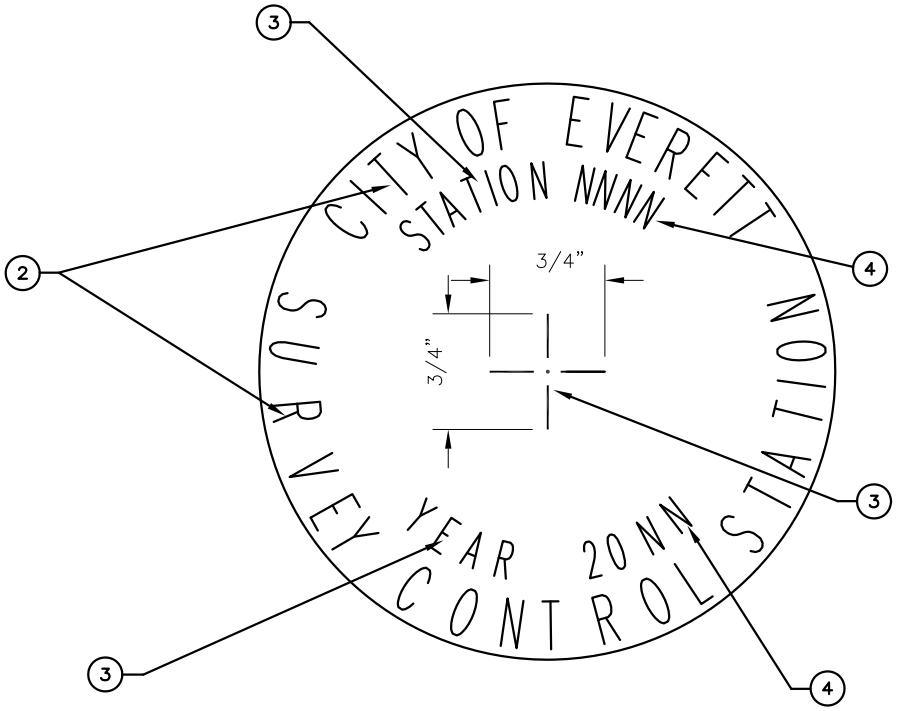

PLAN

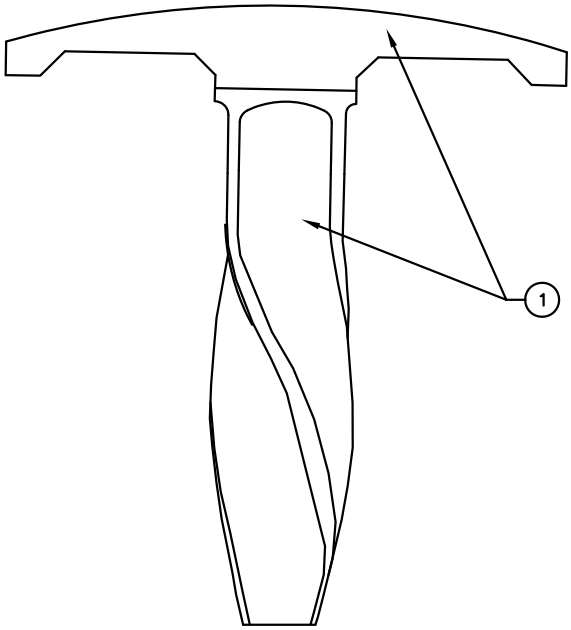

ELEVATION

NOTES:

1. DIMENSIONS OF CASTING BASE & CAP PER WSDOT/APWA STANDARD PLAN H-6.
2. GROOVE FOR 1/4" HIGH CAST LETTERING ON CAP SHALL BE 1/32 IN DEEP BY 3/64 IN WIDE.
3. GROOVE FOR 3/16" HIGH CAST LETTERING AND LINES ON CAP SHALL BE 1/32 IN DEEP BY 1/32 IN WIDE.
4. FIELD STAMPED "STATIONING" AND "YEAR"NUMBERS SHALL BE OF SUFFICIENT DEPTH AND WIDTH SO AS TO BE CLEARLY READABLE AND SHALL BE A MIN. OF 3/16 IN. HIGH.
5. THIS BRASS DISC SHALL ONLY BE USED FOR CONTROL MONUMENTATION PER STD DWG 314 AND AS DIRECTED BY THE CITY SURVEYOR. BRASS DISC AND STATION NO SHALL BE SUPPLIED BY CITY SURVEYOR.

CITY OF EVERETT **PUBLIC WORKS DEPARTMENT**	SURVEY CONTROL MONT. 3" BRASS DISC SHEET 3 OF 3	7-2-2013 Date: 313 COE Std Dwg:

T:\ACad\eps-coe design & constr specs for development\CURRENT\std detail dwgs\Dwg Files\STD313.DWG, 2/21/2014 9:30:37 AM

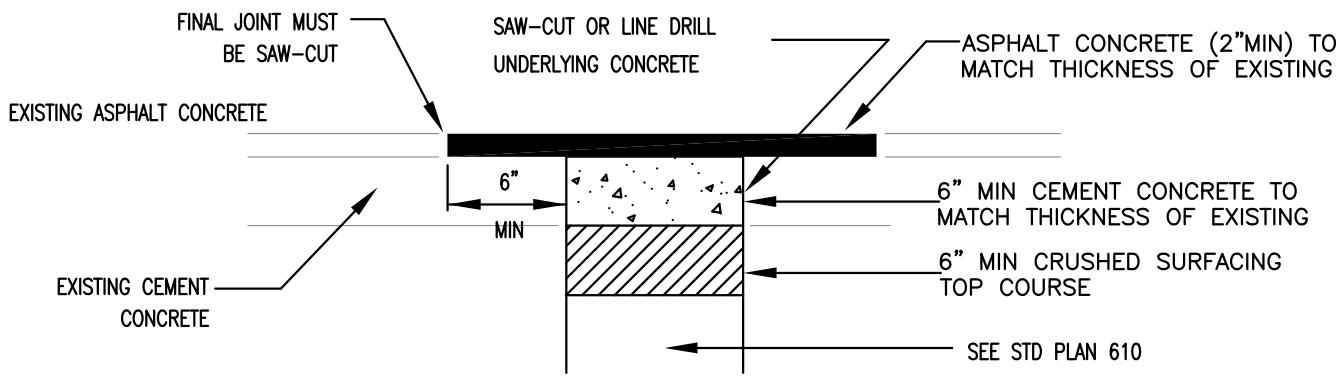

EXISTING ASPHALT CONCRETE OVER CEMENT CONCRETE

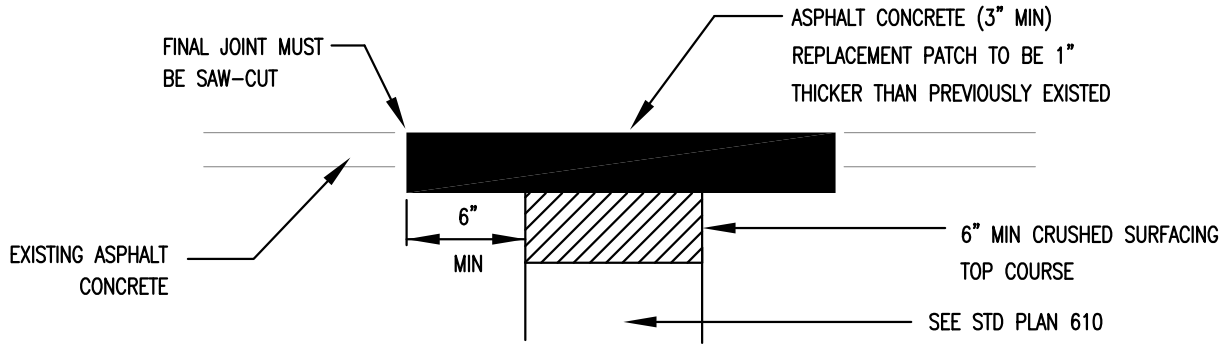

EXISTING ASPHALT CONCRETE OVER PREPARED GRADE

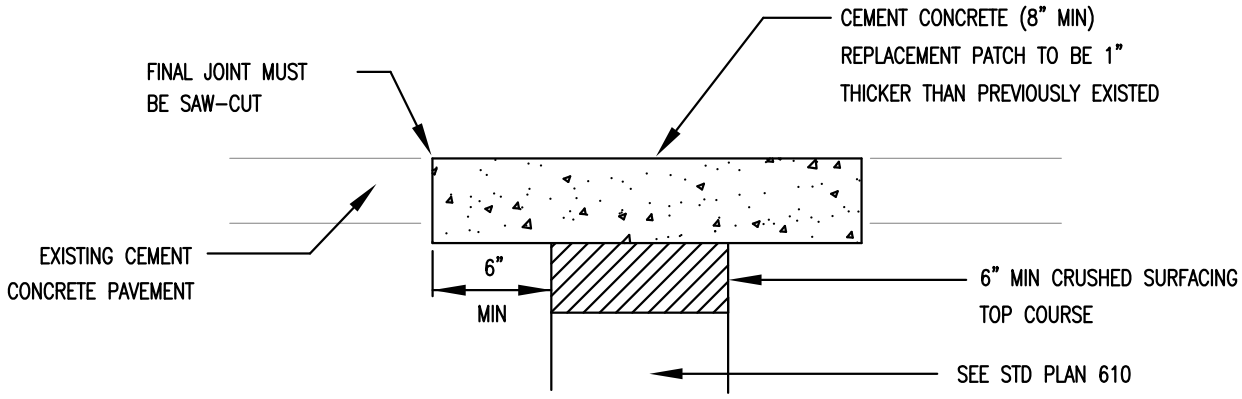

EXISTING CEMENT CONCRETE OVER PREPARED GRADE

NOTES:

1. ALL TRENCHES IN ROADWAY AREAS SHALL BE BACKFILLED AND PATCHED WITH TEMPORARY ASPHALT AT THE END OF EACH WORK DAY, UNLESS PERMISSION IS GRANTED TO DO OTHERWISE BY THE CITY ENGINEER.
2. ALL TEMPORARY PATCHES ON TRENCHES SHALL BE PERMANENTLY PATCHED WITHIN 2 WEEKS OF COMPLETION OF WORK WITHIN ROADWAY AREA.
3. CEMENT CONCRETE FOR PATCHING SHALL BE COMMERCIAL MIX AS CALLED OUT IN WSDOT STD SPECS.

CITY OF EVERETT PUBLIC WORKS DEPARTMENT	PAVEMENT PATCHING DETAILS	7-2-2013 Date:
		316 COE Std Dwg:

T:\ACad\eps-coe design & constr specs for development\CURRENT\std detail dwgs\Dwg Files\STD316.dwg, 2/21/2014 9:31:32 AM

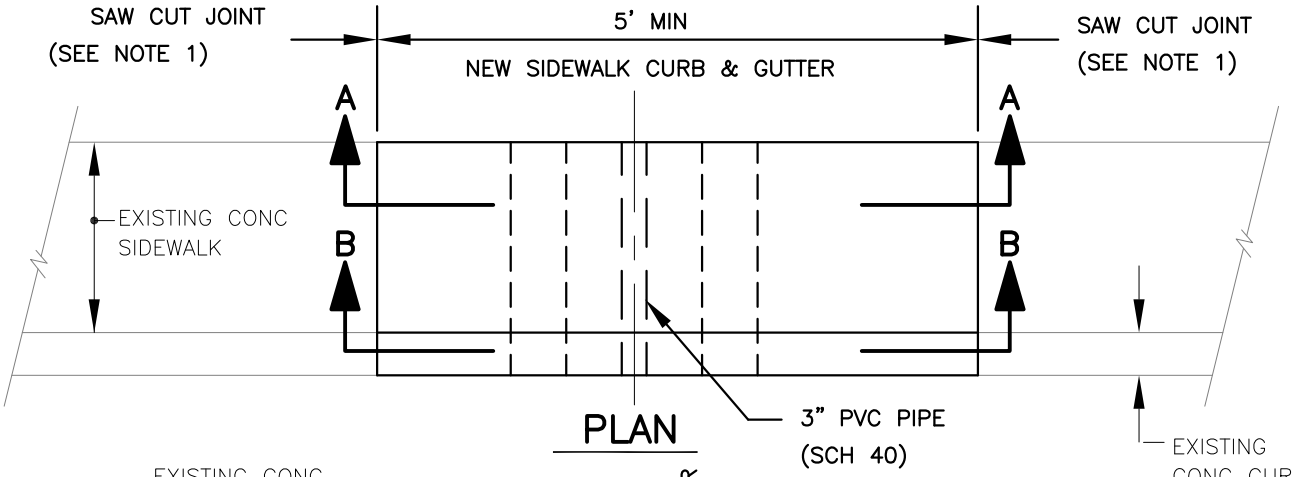

PLAN

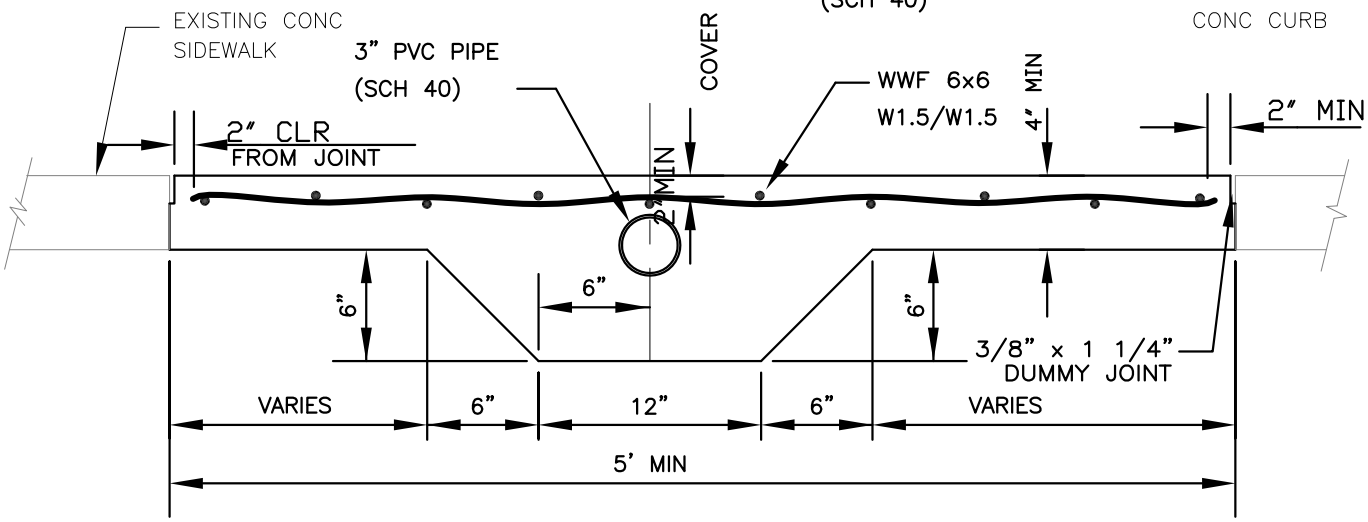

SIDEWALK SECTION A–A

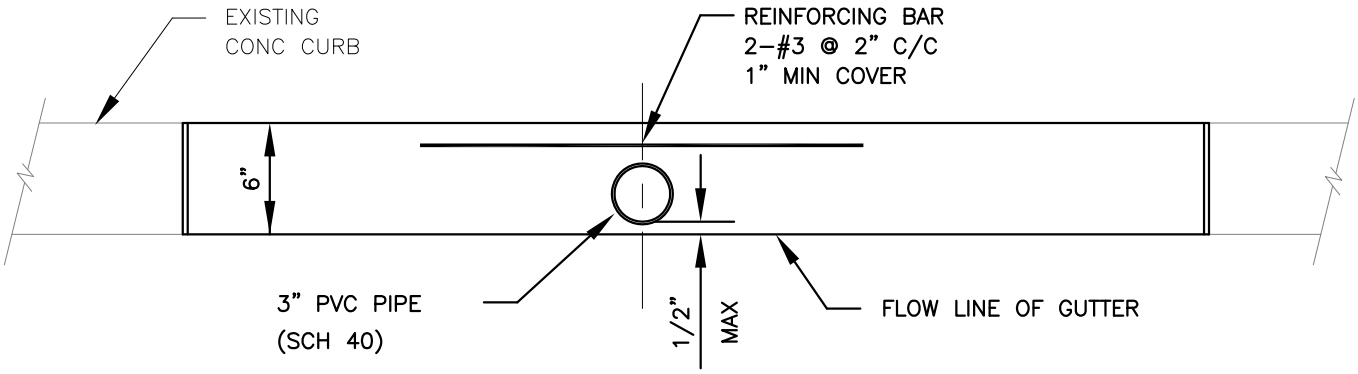

CURB SECTION B–B

NOTES:

1 SIDEWALK AND CURBING MUST BE SAW–CUT AT A DUMMY JOINT OR FULL EXPANSION JOINT.

2 FULL DEPTH OF CURB AND GUTTER MUST BE REMOVED AND REPLACED.

3 ALL NEW CURB, GUTTER AND SIDEWALK SHALL BE CLASS 3000 CEMENT CONCRETE.

CITY OF EVERETT PUBLIC WORKS DEPARTMENT	RESIDENTIAL SIDEWALK DRAIN	4/18/1996 Date:
		319 COE Std Dwg:

T:\ACad\eps-coe design & constr specs for development\CURRENT\std detail dwgs\Dwg Files\STD319.dwg, 2/21/2014 9:32:27 AM

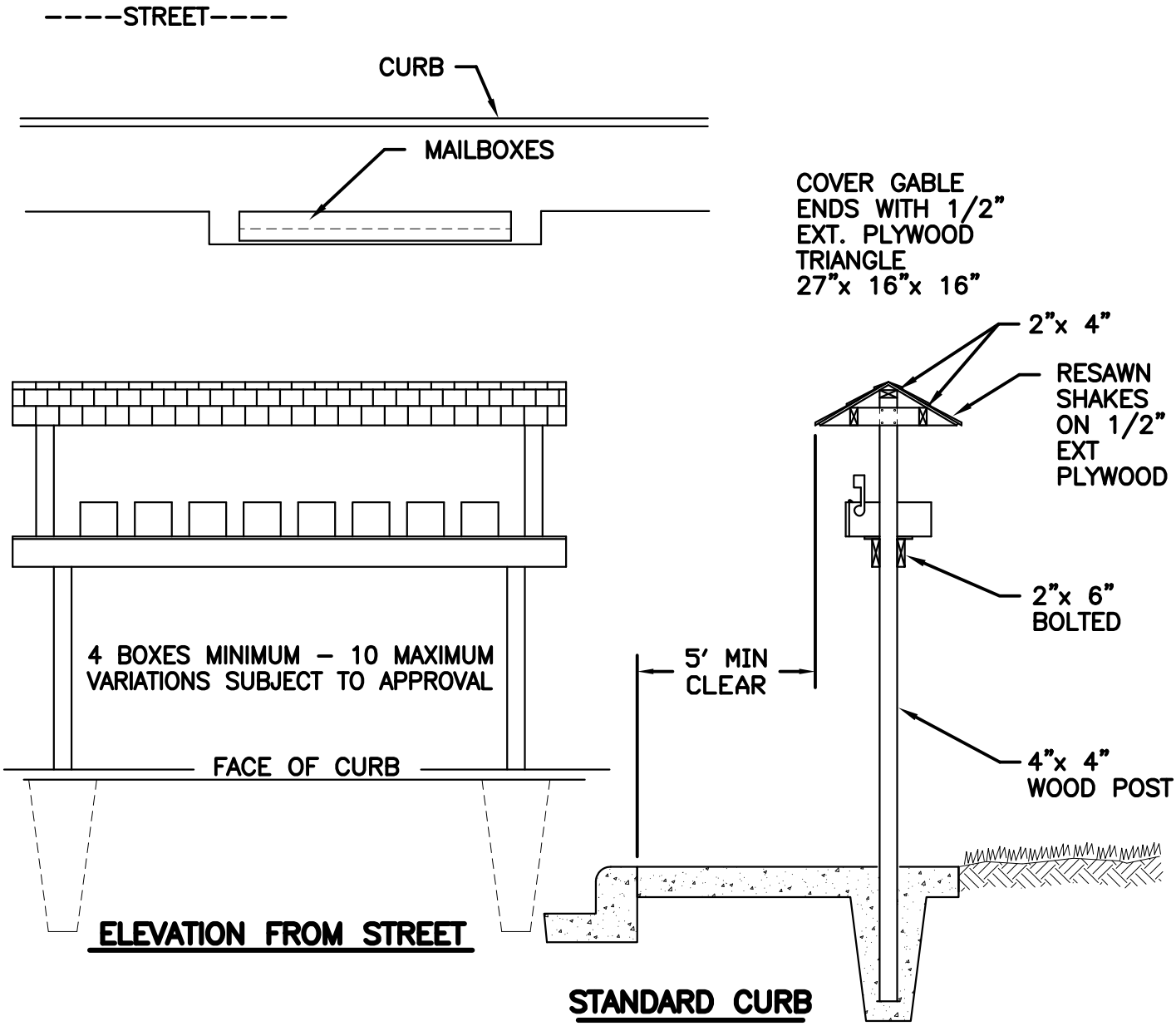

NOTES:

1. MAILBOX MUST BE TYPE "APPROVED BY THE POSTMASTER GENERAL" WITH A UNIFORM BOX STYLE AND METHOD OF ADDRESS IDENTIFICATION PER EACH STANDARD.
2. LOCATION IS SUBJECT TO APPROVAL BY THE CITY FOR PROTECTION OF VIEWS AND ACCESS AND IS TO BE SHOWN ON STREET IMPROVEMENT PLANS.
3. THE SKETCH DEPICTS A MINIMUM STRUCTURAL AND DIMENSIONAL STANDARD. INNOVATIVE DESIGNS MEETING THE MINIMUM DIMENSIONAL AND STRUCTURAL REQUIREMENTS ARE ACCEPTABLE.
4. ALL WOOD TO BE PRESSURE TREATED FIR OR HEMLOCK.

CITY OF EVERETT PUBLIC WORKS DEPARTMENT	MAILBOX STRUCTURE INSTALLATION	1/14/2004 Date:
		320 COE Std Dwg:

T:\ACad\eps-coe design & constr specs for development\CURRENT\std detail dwgs\Dwg Files\STD320.dwg, 2/21/2014 9:33:32 AM

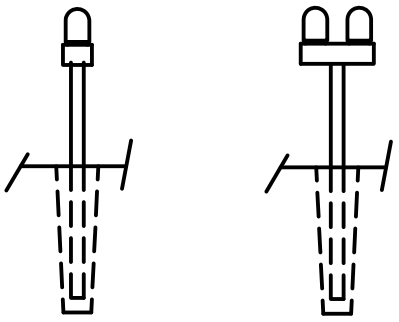

TYPICAL CONFIGURATIONS

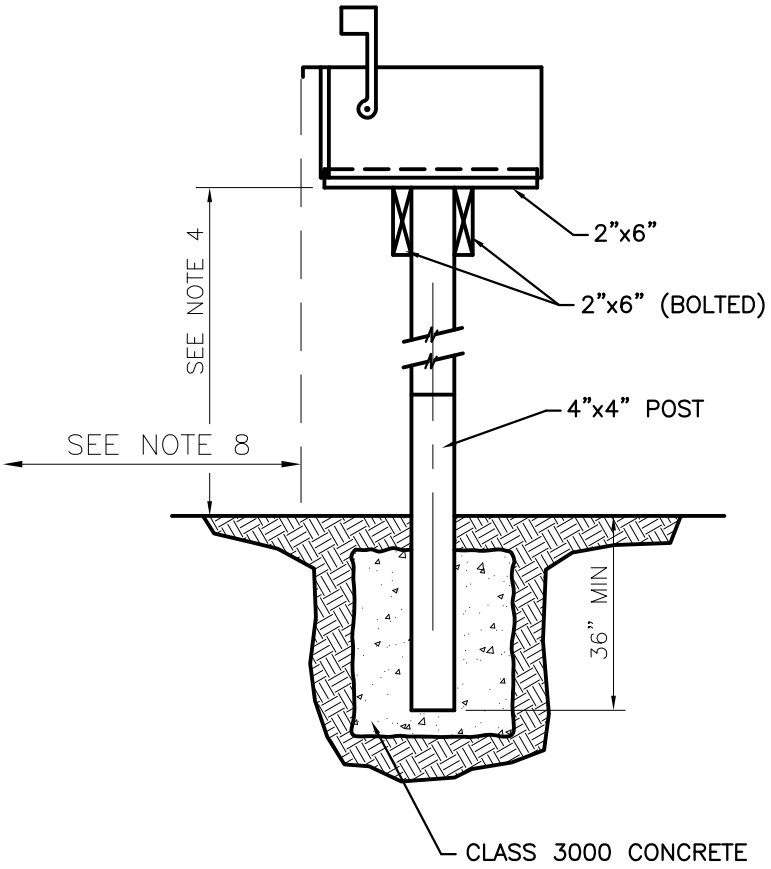

TYPICAL SECTION

NOTES

1. FOR 1 OR 2 MAILBOXES PER STRUCTURE USE SINGLE 4"x4" POST. FOR 3 OR MORE MAILBOXES SEE STD DWG 320 OR 321.
2. ALL WOOD TO BE PRESSURE TREATED FIR OR HEMLOCK.
3. FOR ALTERNATE MAILBOX MOUNTINGS SEE STANDARD DWG 320.
4. MAILBOX HEIGHT VARIES ACCORDING TO THE TYPE OF DELIVERY VEHICLE. WHERE MAIL DELIVERY IS ACCOMPLISHED BY MAIL TRUCKS ("MOUNTED" ROUTES) THE MAILBOX HEIGHTS SHALL BE 44". WHERE MAIL DELIVERY IS ACCOMPLISHED BY PASSENGER VEHICLE ("RURAL" ROUTES) THE MAILBOX HEIGHT SHALL BE 36" TO 38".
5. MAILBOXES MUST BE POSTMASTER APPROVED WITH A UNIFORM BOX STYLE AND METHOD OF ADDRESS IDENTIFICATION.
6. LOCATIONS OF MAILBOXES ARE SUBJECT TO APPROVAL BY THE CITY ENGINEER FOR PROTECTION OF VIEWS AND ACCESS.
7. THIS DRAWING DEPICTS A MINIMUM STRUCTURAL AND DIMENSIONAL STANDARD. INNOVATIVE DESIGNS MEETING OR EXCEEDING THIS MINIMUM STANDARD MUST BE APPROVED BY THE CITY ENGINEER.
8. ALL MAILBOX STRUCTURES SHALL BE PLACED BACK OF SIDEWALK WITH NO PORTION OF THE BOX OR STRUCTURE PROTRUDING INTO THE SIDEWALK. IF NO SIDEWALK EXISTS SETBACK WILL BE SET BY THE CITY ENGINEER.

EVERETT **CITY OF EVERETT** **PUBLIC WORKS DEPARTMENT**	MAILBOX STRUCTURE FOR ONE OR TWO BOXES	1/16/1993 Date: 320A COE Std Dwg:

T:\ACad\eps-coe design & constr specs for development\CURRENT\std detail dwgs\Dwg Files\STD320A.dwg, 2/21/2014 9:34:32 AM

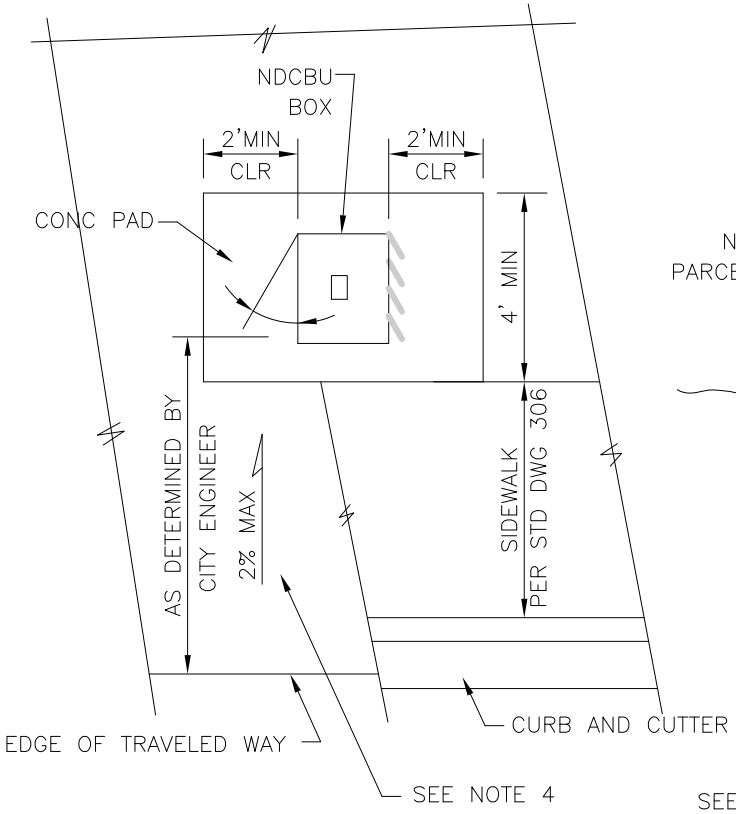

SETBACK PLAN

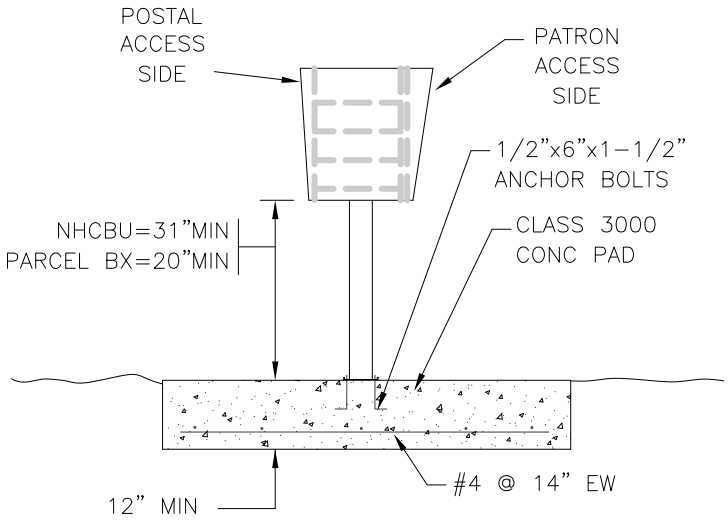

FRONT ELEVATION

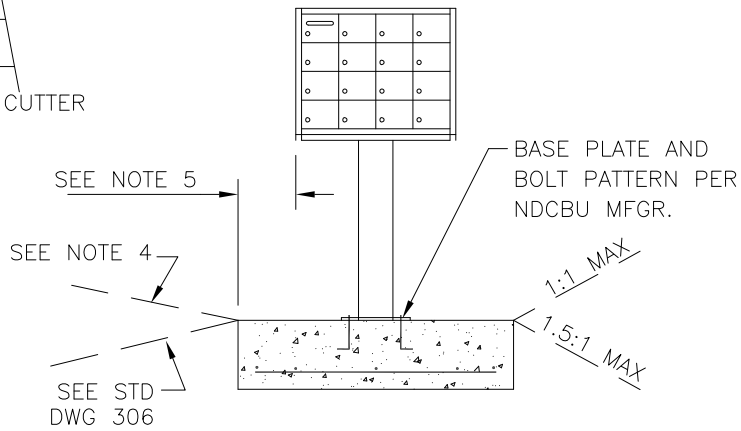

SIDE ELEVATION

NOTES:

1. THIS DRAWING DEPICTS A MINIMUM STRUCTURAL AND DIMENSIONAL STANDARD FOR NEIGHBORHOOD DELIVERY & COLLECTION BOX UNIT (NDCBU) AND PADS FOR SPECIFIC POSTAL REQUIREMENTS CONTACT THE POSTMASTER.
2. MAILBOXES MUST BE POSTMASTER APPROVED WITH A UNIFORM BOX STYLE AND METHOD OF ADDRESS IDENTIFICATION.
3. LOCATIONS OF MAILBOXES ARE SUBJECT TO APPROVAL BY THE CITY ENGINEER FOR PROTECTION OF VIEWS AND ACCESS.
4. INSTALLATION OF DRAINAGE CULVERT MAY BE NECESSARY IN AREAS WHERE THERE IS NO CONCRETE SIDEWALK AND THE REQUIRED SETBACK SPANS A ROADSIDE DITCH. ACCESS TO SUCH STRUCTURES WILL HAVE A MAX. SLOPE OF 2%. AND SHALL HAVE A PAD CONSISTING OF A MINIMUM OF 2" OF CRUSHED SURFACING TOP COURSE COMPACTED TO 95% MAXIMUM DENSITY.
5. ALL MAILBOX STRUCTURES SHALL BE PLACED BACK OF SIDEWALK WITH NO PORTION OF BOX OR STRUCTURE PROTRUDING INTO THE SIDEWALK. IF NO SIDEWALK EXISTS SETBACK WILL BE SET BY THE CITY ENGINEER.
6. SUGGESTED SOURCE SECURITY MFG CORP (800) 762-6937, 8000 SERIES PEDESTAL BOXES, SALSBURY INDUSTRIES (800) 323-3003 OR POSTAL APPROVED EQUAL.
7. PLACEMENT LOCATION OF PEDESTAL PARCEL LOCKER WILL BE APPROVED BY THE CITY ENGINEER AND THE POSTAL SERVICE.

CITY OF EVERETT PUBLIC WORKS DEPARTMENT	NDCBU MAILBOX CLUSTER	1/14/1993 Date:
		321 COE Std Dwg:

T:\ACad\eps-coe design & constr specs for development\CURRENT\std detail dwgs\Dwg Files\STD321.dwg, 2/21/2014 9:36:15 AM

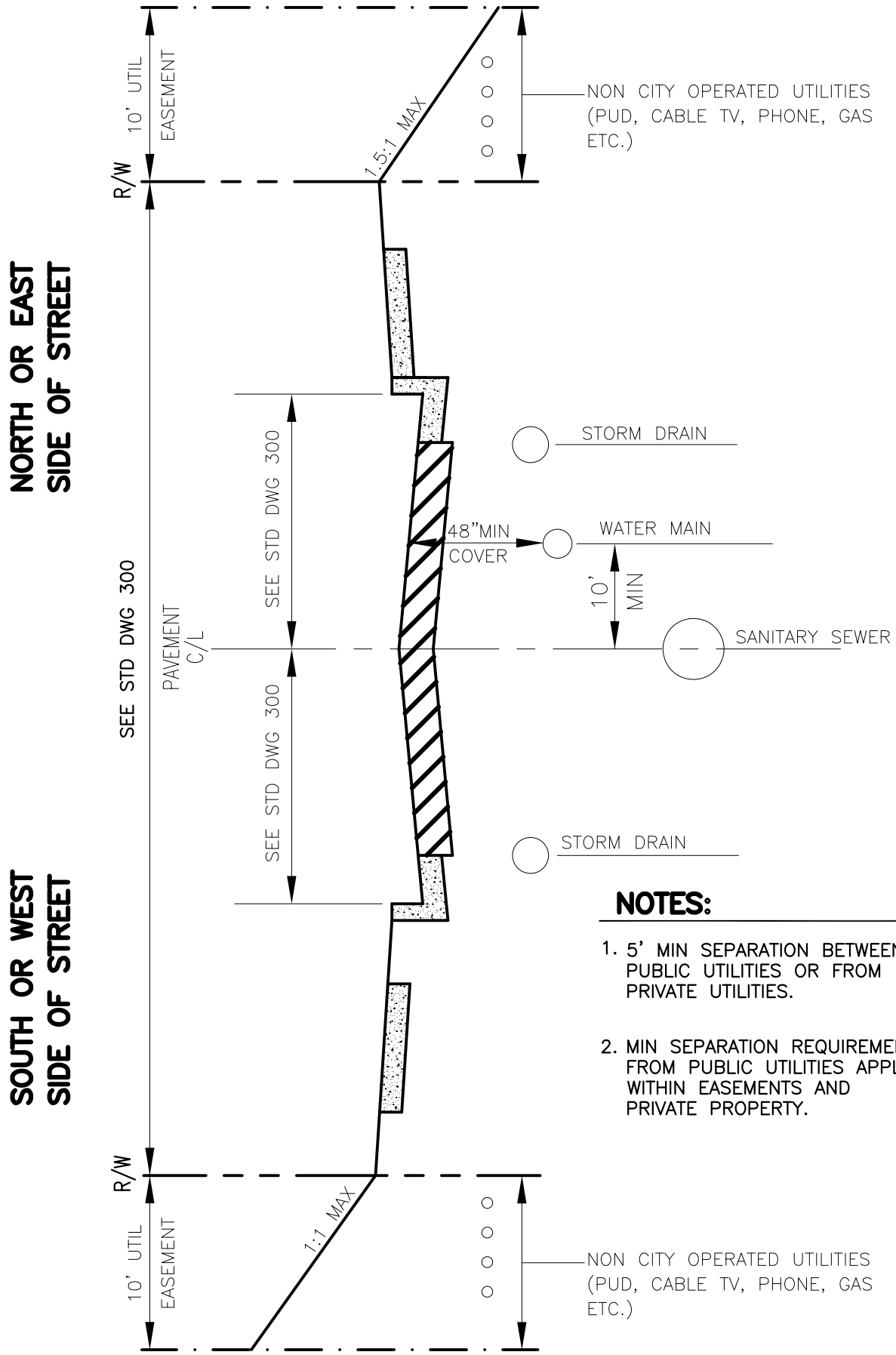

NOTES:

1. 5' MIN SEPARATION BETWEEN PUBLIC UTILITIES OR FROM PRIVATE UTILITIES.
2. MIN SEPARATION REQUIREMENTS FROM PUBLIC UTILITIES APPLY WITHIN EASEMENTS AND PRIVATE PROPERTY.

CITY OF EVERETT PUBLIC WORKS DEPARTMENT	TYPICAL UTILITY LOCATIONS	10/12/2000 Date:
		322 COE Std Dwg:

T:\ACad\eps-coe design & constr specs for development\CURRENT\std detail dwgs\Dwg Files\STD322.dwg, 2/21/2014 9:37:14 AM

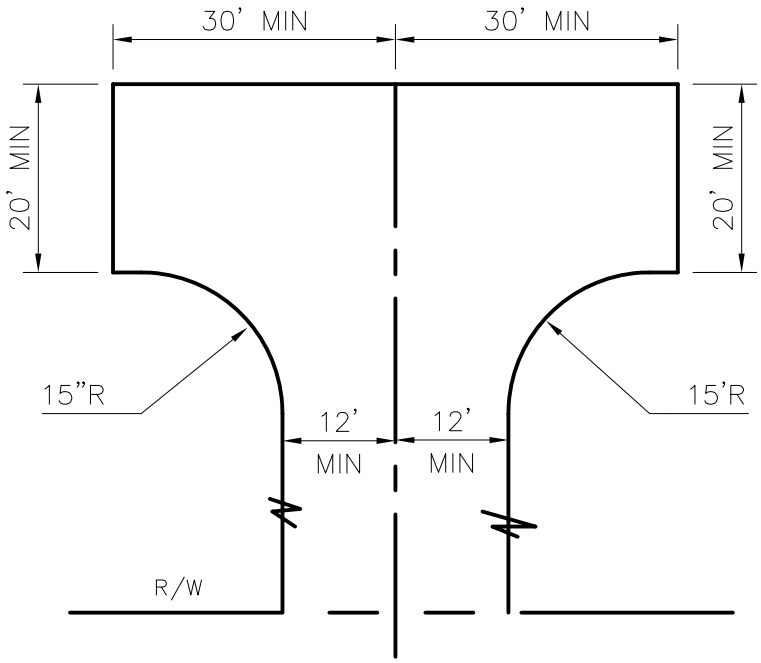

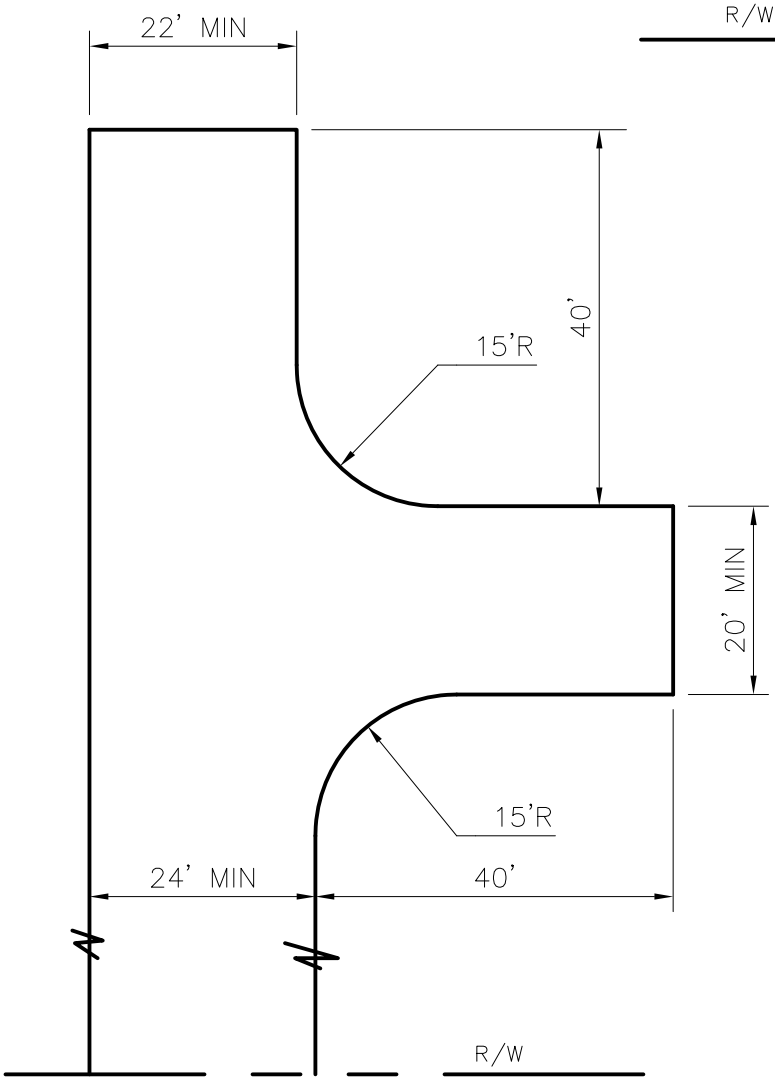

CITY OF EVERETT
PUBLIC WORKS DEPARTMENT

TEMPORARY TURNAROUNDS

8/21/1991
Date:

323
COE Std Dwg:

T:\ACad\eps-coe design & constr specs for development\CURRENT\std detail dwgs\Dwg Files\STD323.dwg, 2/21/2014 9:38:25 AM

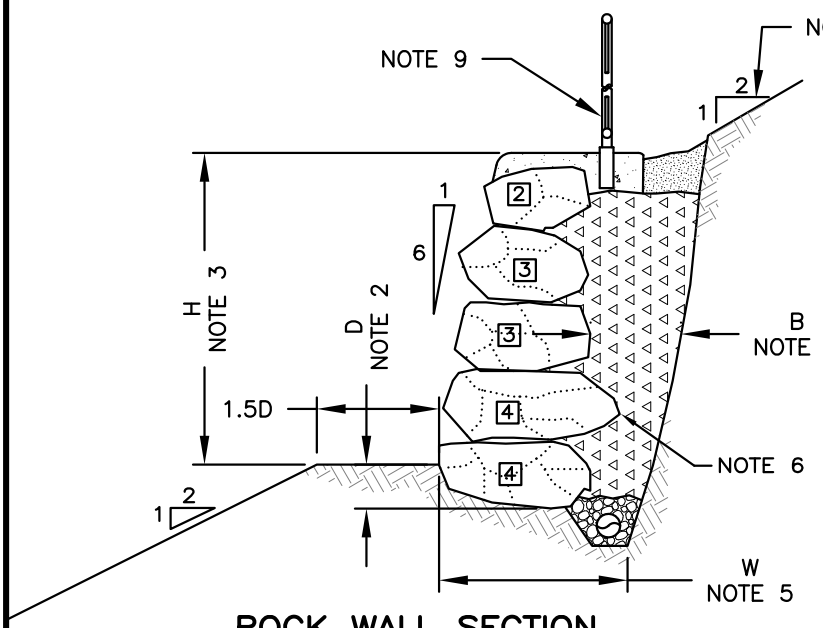

ROCK WALL SECTION

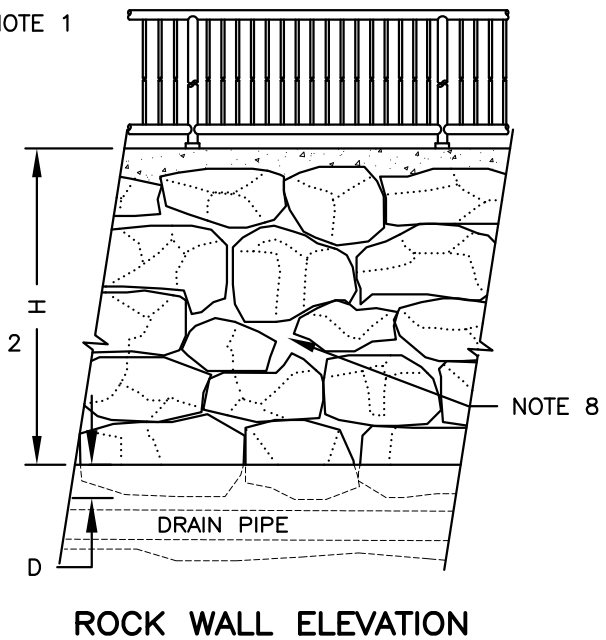

ROCK WALL ELEVATION

NOTES

1. MAXIMUM INCLINATION OF THE SLOPES ABOVE AND BEHIND ROCK WALL SHALL BE 2:1 (HORIZONTAL:VERTICAL)
2. MINIMUM THICKNESS OF ROCK FILTER LAYER B=12 INCHES. MINIMUM EMBEDMENT D=12 INCHES.
3. MAXIMUM ROCK WALL HEIGHT H=8 FEET. ROCK WALLS GREATER THAN 8 FEET IN HEIGHT SHALL BE DESIGNED BY A CIVIL ENGINEER LICENSED IN THE STATE OF WASHINGTON.
4. ROCK SHALL BE PLACED TO GRADUALLY DECREASE IN SIZE WITH INCREASING WALL HEIGHT.
5. MINIMUM WIDTH OF KEYWAY EXCAVATION W, SHALL BE EQUAL TO THE THICKNESS OF THE BASE ROCK PLUS B (ROCK FILTER)
6. THE LONG DIMENSION OF THE ROCKS SHALL EXTEND BACK TOWARDS THE CUT OR FILL FACE TO PROVIDE MAXIMUM STABILITY.
7. WHENEVER POSSIBLE EACH ROCK SHALL BEAR ON TWO OR MORE ROCKS BELOW IT, WITH GOOD FLAT–TO–FLAT CONTACT.
8. WHERE VOIDS OF GREATER THAN 6 INCHES IN DIMENSIONS EXIST IN THE ROCK FACE AND THERE IS NO ROCK CONTACT WITHIN THE ROCK WALL THICKNESS, THE VOID SHALL BE CHINKED WITH SMALL PIECES OF ROCK.
9. ROCKERIES WHICH ARE MORE THAN 30 INCHES ABOVE GRADE OR FLOOR BELOW SHALL BE PROTECTED BY GUARDRAIL SUCH AS A ORNAMENTAL OR PEDESTRIAN RAIL. TYPE TO BE DETERMINED BY THE CITY ENGINEER, SEE DWGS 325 & 326
10. FOR DESIGN LOCATION AND UNDERGROUND UTILITY LIMITATIONS REFEER TO STD DWG 324B.

NOTES (CONT)

11. THE DENSITY OF ROCK MATERIAL SHALL BE A MINIMUM OF 155 PCF. THE SIZE CATEGORIES FOR ROCK SHALL BE AS FOLLOWS:

SIZE	APPROXIMATE WEIGHT – LBS.	APPROXIMATE DIAMETER–INCHES
1 MAN	50 –200	12 – 18
2 MAN	200 –700	18 – 28
3 MAN	700 – 2000	28 – 36
4 MAN	2000 – 4000	36 – 48
5 MAN	4000 – 6000	48 – 54
6 MAN	6000 – 8000	54 – 60

LEGEND

- DRAINAGE MATERIALS TO CONSIST OF CLEAN 4"–2" ANGULAR SPALLS.
- GRADING #57 AGGREGATE PER SECTION 9.03.1(4)C OF WSDOT/APWA STANDARD SPECIFICATION
- CONCRETE ROCKERY CAP. REQUIRED IN R.O.W., OPTIONAL ON PRIVATE PROPERTY.
- UNDISTURBED FIRM NATIVE SOIL
- SEED OR SOD ON 12" OF TOPSOIL WITH UNDERLAYER OF FILTER FABRIC.
- 4 INCH DIAMETER, HDPE OR SDR35 PVC, PERFORATED OR SLOTTED, WITH SMOOTH INTERIOR PIPE. SET SLIGHTLY LOWER THAN THE BASE ROCK TO PREVENT DAMAGE. LAY WITH A POSITIVE SLOPE TO DISCHARGE AWAY FROM ROCKERY.
- [4] DESIGNATES SIZE OF ROCK, I.E. 4 MAN. SEE NOTE 11.

CITY OF EVERETT
PUBLIC WORKS DEPARTMENT

ROCKERY
(DESIGN AND CONSTRUCTION REQUIREMENTS)

3-19-2008
Date:

324A
COE Std Dwg:

T:\ACad\eps-coe design & constr specs for development\CURRENT\std detail dwgs\Dwg Files\STD324A.dwg, 2/21/2014 10:29:16 AM

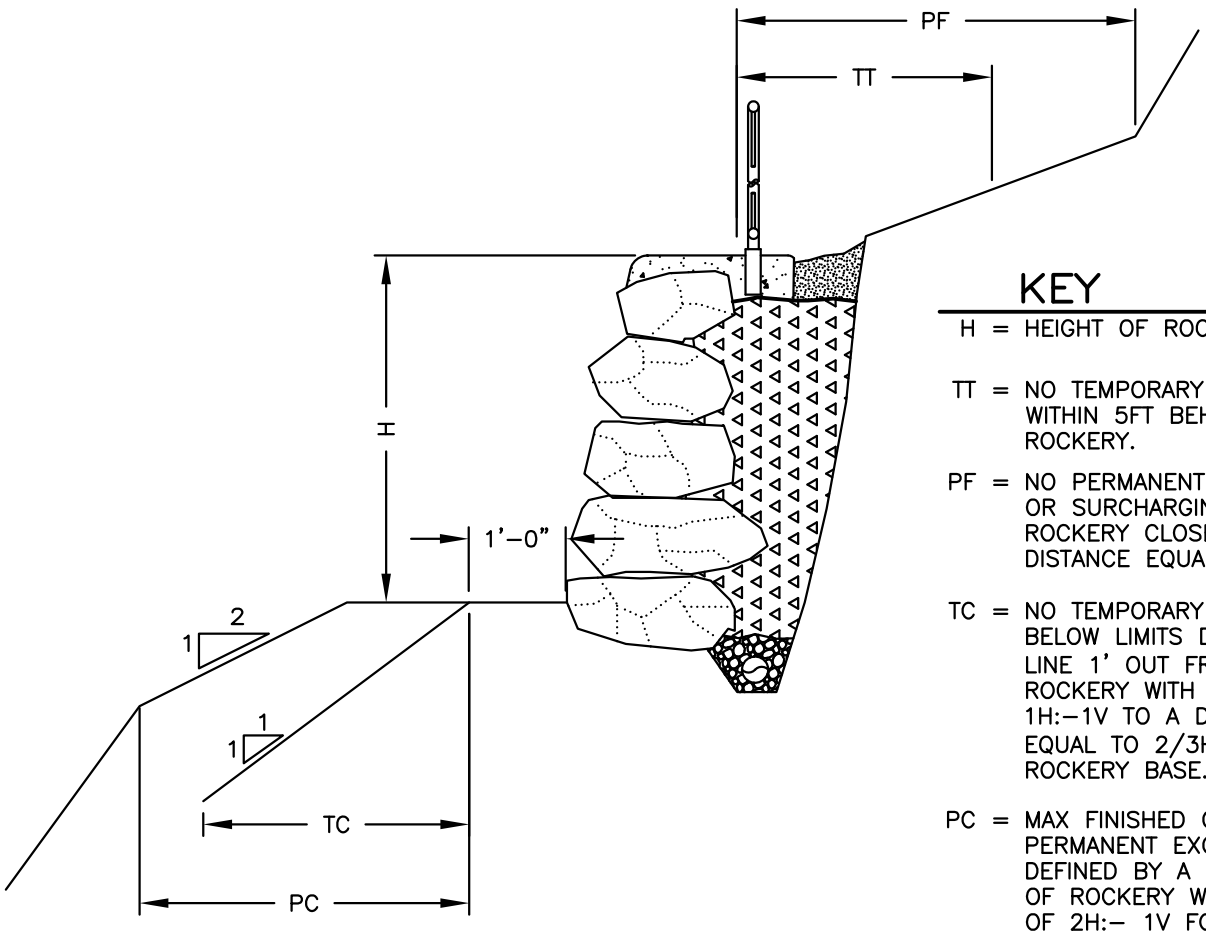

KEY

H = HEIGHT OF ROCK WALL.

TT = NO TEMPORARY EXCAVATION WITHIN 5FT BEHIND ROCKERY.

PF = NO PERMANENT EXCAVATION OR SURCHARGING BEHIND ROCKERY CLOSER THAN A DISTANCE EQUAL TO H.

TC = NO TEMPORARY EXCAVATION BELOW LIMITS DEFINED BY A LINE 1' OUT FROM BASE OF ROCKERY WITH A SLOPE OF 1H:-1V TO A DISTANCE EQUAL TO 2/3H FROM ROCKERY BASE.

PC = MAX FINISHED GRADE OR PERMANENT EXCAVATION DEFINED BY A FROM BASE OF ROCKERY WITH A SLOPE OF 2H:- 1V FOR A MIN DISTANCE EQUAL TO H FROM ROCKERY BASE.

DESIGN AND POST CONSTRUCTION LIMITATIONS

NOTES

1. ALL NEW ROCKERY DESIGN AND PLACEMENT WILL FOLLOW TO CONSTRUCTION LIMITATIONS DESCRIBE ABOVE, AND FOLLOW THE GUIDELINES ESTABLISHED BY THE ASSOCIATED ROCKERY CONTRACTORS "STANDARD ROCK WALL CONSTRUCTION GUIDELINES" DATED 12/2/92 INCLUDING ANY AND ALL REVISIONS.

2. MODIFICATIONS TO OR PLACEMENT OF SUBSEQUENT UNDERGROUND UTILITIES WILL ALSO FOLLOW LIMITATIONS DESCRIBED ABOVE.

CITY OF EVERETT PUBLIC WORKS DEPARTMENT	ROCKERY (PLACEMENT & POST CONSTRUCTION LIMITS)	7-2-2013 Date: 324B COE Std Dwg:

T:\ACad\eps-coe design & constr specs for development\CURRENT\std detail dwgs\Dwg Files\STD324B.dwg, 2/21/2014 10:30:21 AM

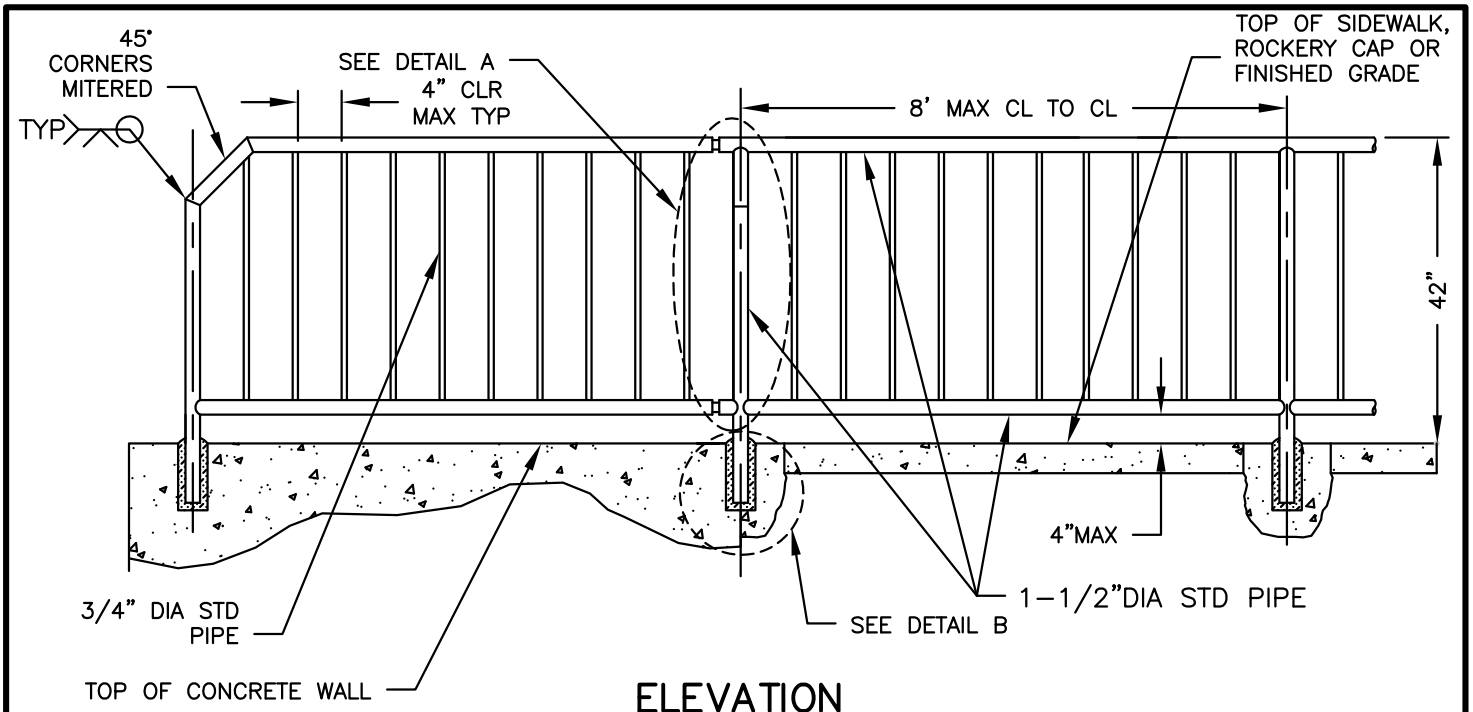

ELEVATION

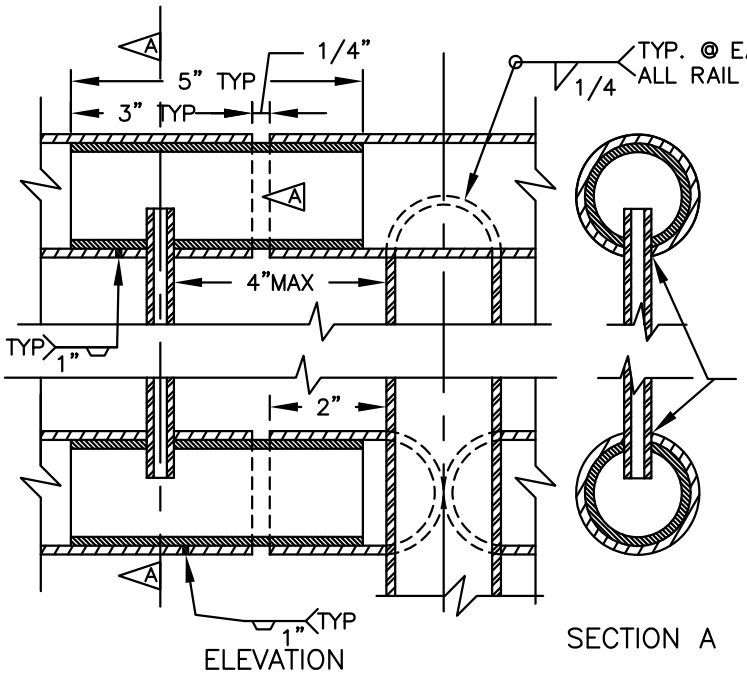

DETAIL A

SLIP JOINT & RAIL CONNECTIONS TO POSTS

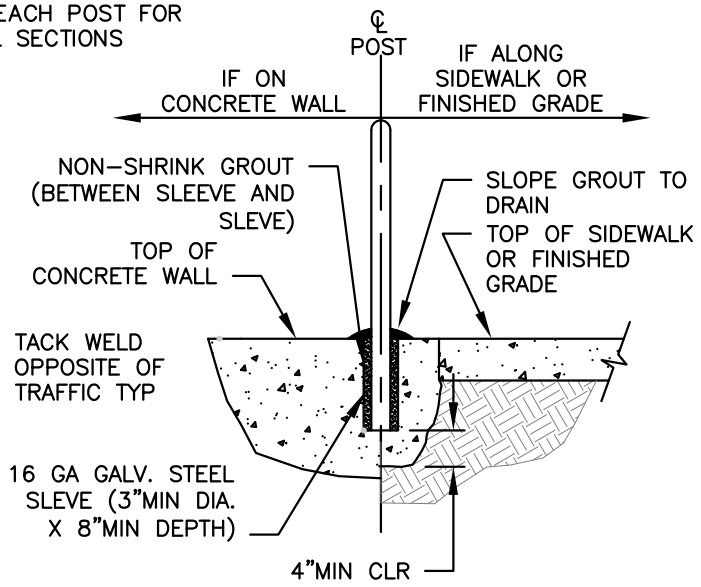

DETAIL B

POST MOUNTING

NOTES:

1. MATERIAL FOR PEDESTRIAN HANDRAIL SHALL BE ALUMINUM (ASTM B-429) OR GALVINIZED STEEL (ASTM 120) AS APPROVED BY THE CITY ENGINEER.
2. SEE SHEET 2 OF 2 THIS DRAWING FOR ADDITIONAL FABRICATION AND SPECIFICATION REQUIREMENTS.
3. PROVIDE SLIP JOINTS AT STAIRWAY EXPANSION JOINTS AND AT EVERY 24 FEET ON CENTER MAXIMUM.

CITY OF EVERETT **PUBLIC WORKS DEPARTMENT**	PEDESTRIAN HANDRAIL SHEET 1 OF 2	3-24-2008 Date: 325 COE Std Dwg:

T:\ACad\eps-coe design & constr specs for development\CURRENT\std detail dwgs\Dwg Files\STD325.DWG, 2/21/2014 10:31:09 AM

ALUMINUM PEDESTRIAN RAIL NOTES:

1. ALUMINUM PEDESTRIAN RAIL SHALL BE FABRICATED AND INSTALLED IN ACCORDANCE WITH THESE SPECIAL PROVISIONS AND THIS DRAWING.

2. ALUMINUM PEDESTRIAN RAIL SHALL BE NATURAL ALUMINUM COLOR.

3. COMPLETED ALUMINUM RAILING UNITS SHALL BE ANODIZED AFTER FABRICATION CONFORMING TO THE REQUIREMENTS OF THE ALUMINUM ASSOCIATION STANDARD FOR ANODIZED ARCHITECTURAL ALUMINUM, CLASS I ANODIC COATING, AA-C22-A41.

4. WELDING SHALL CONFORM TO THE REQUIREMENTS OF THE "SPECIFICATIONS FOR ALUMINUM STRUCTURES" OF THE ALUMINUM ASSOCIATION. ALL EXPOSED WELDS SHALL BE GROUND FLUSH WITH ADJACENT SURFACES.

5. THE BASE METAL FOR ALUMINUM RAILING SHALL BE ASA ALLOY DESIGNATION 6063-T6. PIPE AND TUBING SHALL BE EXTRUDED CONFORMING TO THE REQUIREMENTS OF ASTM B 429, PLATES AND SHEETS SHALL BE ROLLED CONFORMING TO ASTM B 209, AND RODS, BARS OR SHAPES SHALL BE EXTRUDED CONFORMING TO ASTM B 221.

6. HORIZONTAL RAILS AND VERTICAL SUPPORT POSTS SHALL BE 1 1/2 INCH DIAMETER STANDARD ALUMINUM PIPE AND BALUSTERS SHALL BE 3/4 INCH DIAMETER STANDARD ALUMINUM PIPE. RAILS, POSTS, AND BALUSTERS SHALL BE MACHINE CUT TO PROVIDE A UNIFORM LENGTH PRIOR TO ASSEMBLY.

7. RAILING SHALL BE ERECTED AND ADJUSTED, IF NECESSARY, TO ASSURE A CONTINUOUS LINE AND GRADE.

GALVANIZED STEEL PEDESTRIAN RAIL NOTES:

1. GALVANIZED PEDESTRIAN RAIL SHALL BE FABRICATED AND INSTALLED IN ACCORDANCE WITH THESE SPECIAL PROVISIONS AND THIS DRAWING.

2. STEEL RAILINGS MATERIALS SHALL BE WELDED OR SEAMLESS STEEL PIPE CONFORMING TO THE REQUIREMENTS OF ASTM A 53, STRUCTURAL STEEL CONFORMING TO ASTM A 36, OR TUBULAR SECTIONS OF HOT ROLLED MILD STEEL, CONFORMING TO ASTM A 501. ALL WELDING SHALL CONFORM TO AMERICAN WELDING SOCIETY STRUCTURAL WELDING CODE AWS D1.1. AFTER FABRICATION EACH SECTION OF RAILING SHALL BE HOT-DIPPED GALVANIZED WITH A MINIMUM ZINC COATING OF 2 OUNCES PER SQUARE FOOT. ALL BURRS AND SHARP EDGES SHALL BE REMOVED PRIOR TO GALVANIZING.

3. FIELD WELDS SHALL BE GALVANIZED WITH SUCH MATERIALS AS "GALVALLOY" OR "GALVICON". PAINTING OF WELDS WILL NOT BE PERMITTED.

4. HORIZONTAL RAILS AND VERTICAL SUPPORT POSTS SHALL BE BE 1 1/2 INCH DIAMETER AND BALUSTERS SHALL BE 3/4 INCH DIAMETER STANDARD WEIGHT GALVANIZED STEEL PIPE. RAILS, POSTS AND BALUSTERS SHALL BE MACHINE CUT TO PROVIDE A UNIFORM LENGTH PRIOR TO ASSEMBLY.

5. RAILING SHALL BE ERECTED AND ADJUSTED, IF NECESSARY, TO ASSURE A CONTINUOUS LINE AND GRADE.

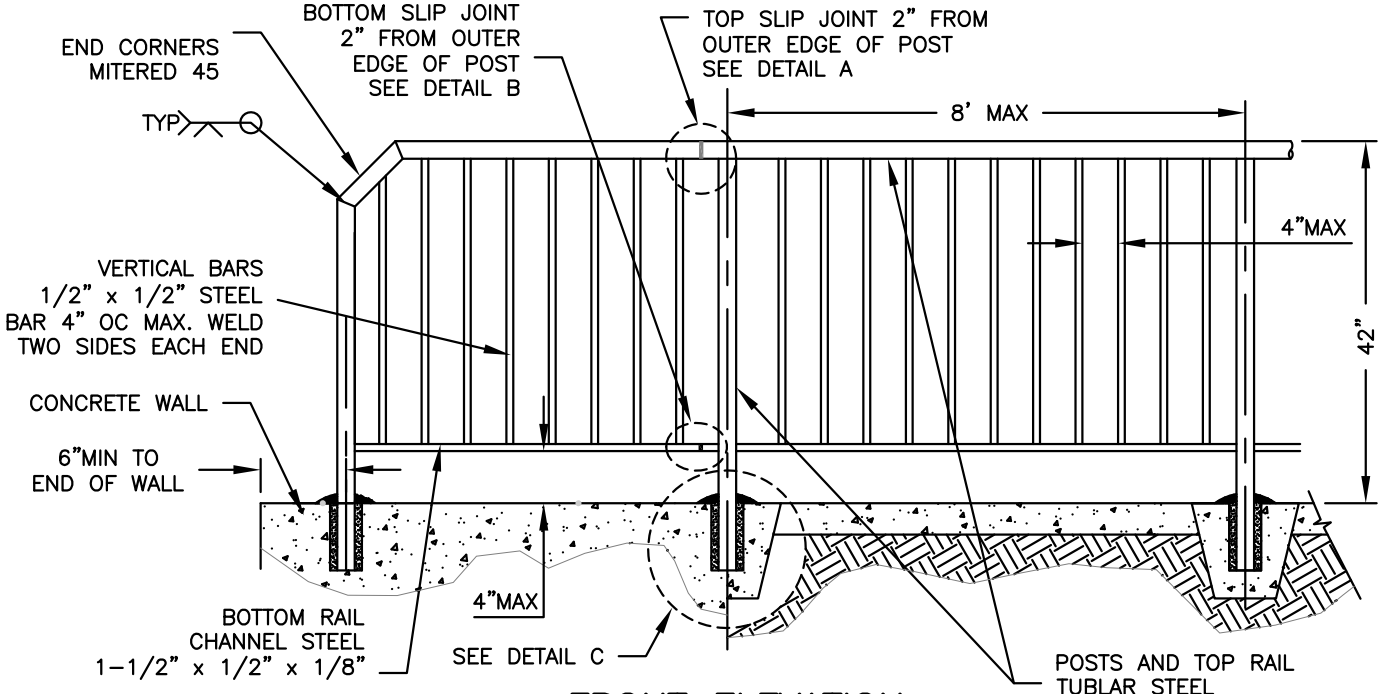

FRONT ELEVATION

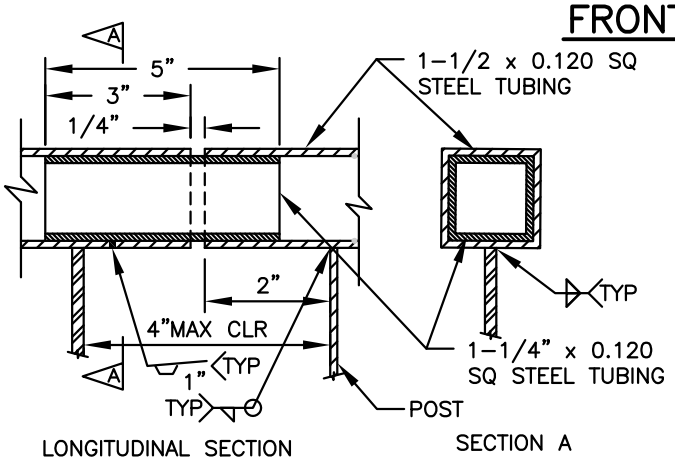

DETAIL A

TOP SLIP JOINT

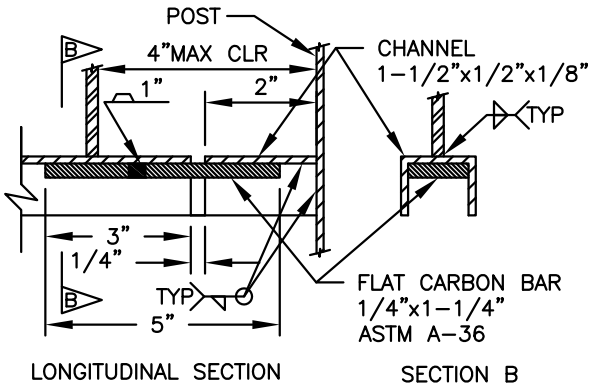

DETAIL B

BOTTOM SLIP JOINT

NOTES:

1. ORNAMENTAL RAILING SHALL BE CONSTRUCTED OF STEEL CONFORMING TO ASTM A-53.
2. WELDING SHALL CONFORM TO THE REQUIREMENTS OF THE "STRUCTURAL WELDING CODE" AWS D 1.1.
3. PROVIDE SLIP JOINTS AT STAIRWAY EXPANSION JOINTS AND AT EVERY 24 FEET ON CENTER MAXIMUM.
4. MAXIMUM SPACING OF POSTS SHALL BE 8 FEET ON STRAIGHT ALIGNMENT AND 6 FEET ON CURVED ALIGNMENT LESS THAN 30 FEET RADIUS.
5. AFTER FABRICATION, ALL BURRS AND SHARP EDGES SHALL BE REMOVED.
6. APPLY RUST PROOF METAL PRIMER AND ONE COAT OF BLACK ORNAMENTAL IRON METAL PAINT.

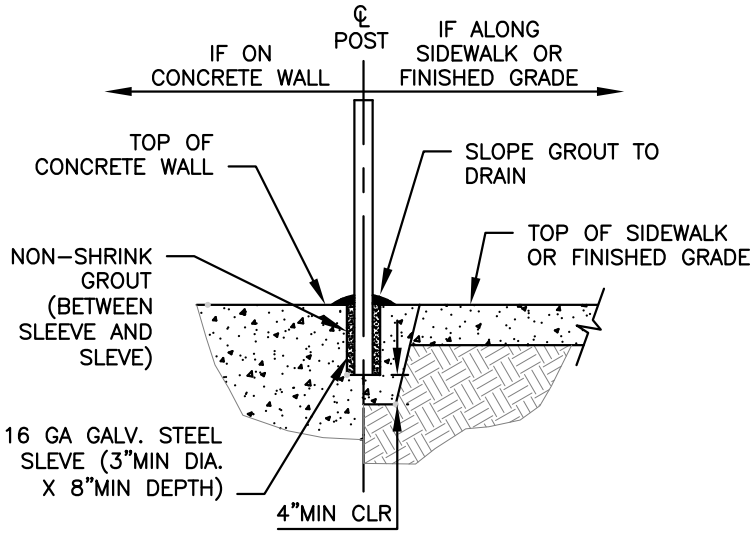

DETAIL C

CITY OF EVERETT
PUBLIC WORKS DEPARTMENT

ORNAMENTAL HANDRAIL

3-25-2008
Date:

326
COE Std Dwg:

T:\ACad\eps-coe design & constr specs for development\CURRENT\std detail dwgs\Dwg Files\STD326.dwg, 2/21/2014 10:32:28 AM

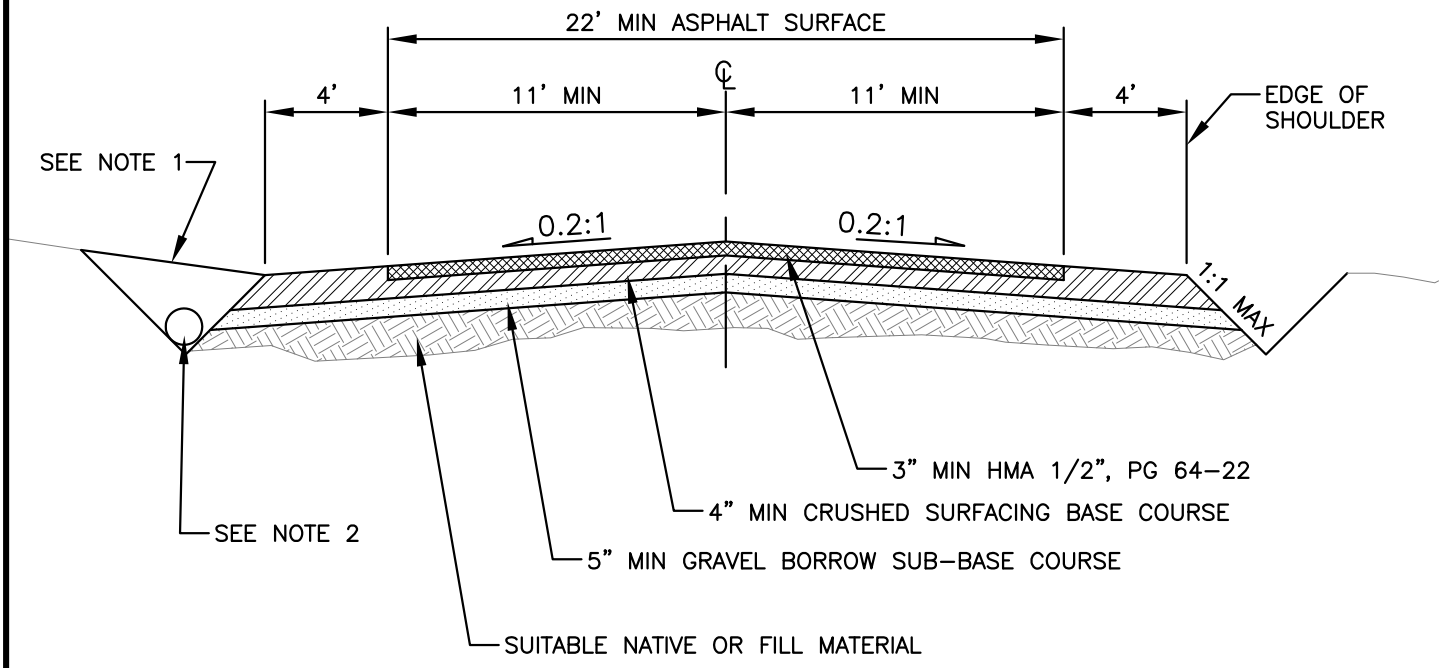

NOTES:

1. DRIVE GRADE AT RIGHT-OF-WAY LINE SHALL CONFORM TO SECTION 3 EVERETT STANDARDS UNLESS OTHERWISE APPROVED BY CITY ENGINEER.
2. A 12 INCH MINIMUM CORRUGATED POLYETHYLENE SMOOTH INTERIOR PIPE IS REQUIRED UNDER ALL DRIVEWAYS.
3. SUB-BASE AND TOP COURSE MATERIALS SHALL BE COMPACTED TO 95% AASHTO MAXIMUM DRY DENSITY.
4. ALL MANHOLES, CATCH BASINS, HAND HOLES AND OTHER STRUCTURES IN THE ASPHALT SURFACE SHALL BE INSTALLED IN ACCORDANCE WITH CURRENT CITY STANDARD SPECIFICATIONS.

CITY OF EVERETT PUBLIC WORKS DEPARTMENT	TYPICAL ROADWAY SECTION SPECIAL INTERIM STREET	7-2-2013 Date: 327 COE Std Dwg:

T:\ACad\eps-coe design & constr specs for development\CURRENT\std detail dwgs\Dwg Files\STD327.dwg, 2/21/2014 10:35:37 AM

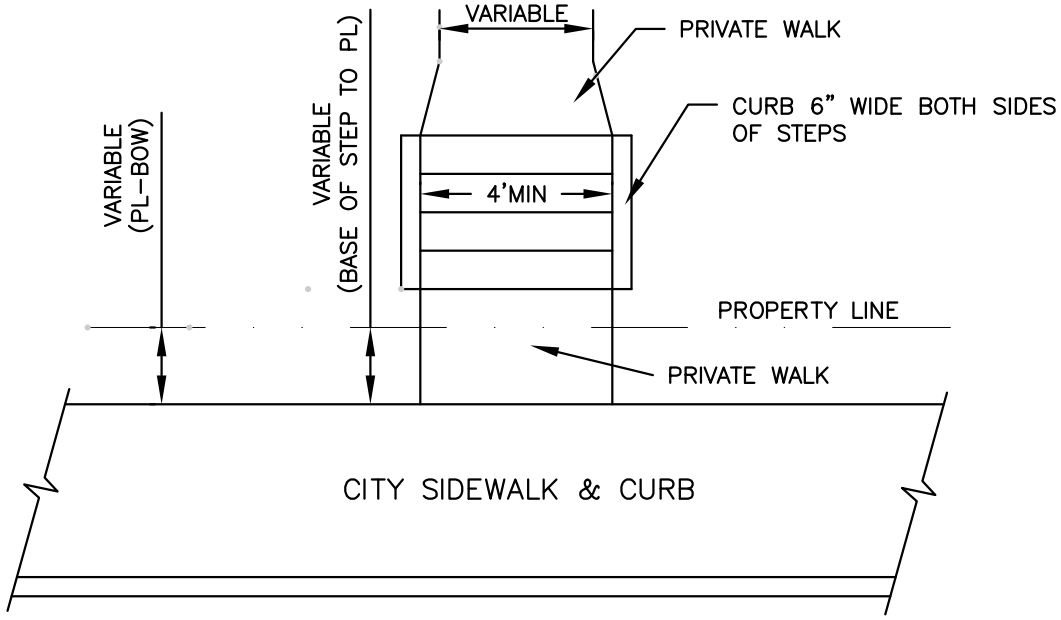

PLAN

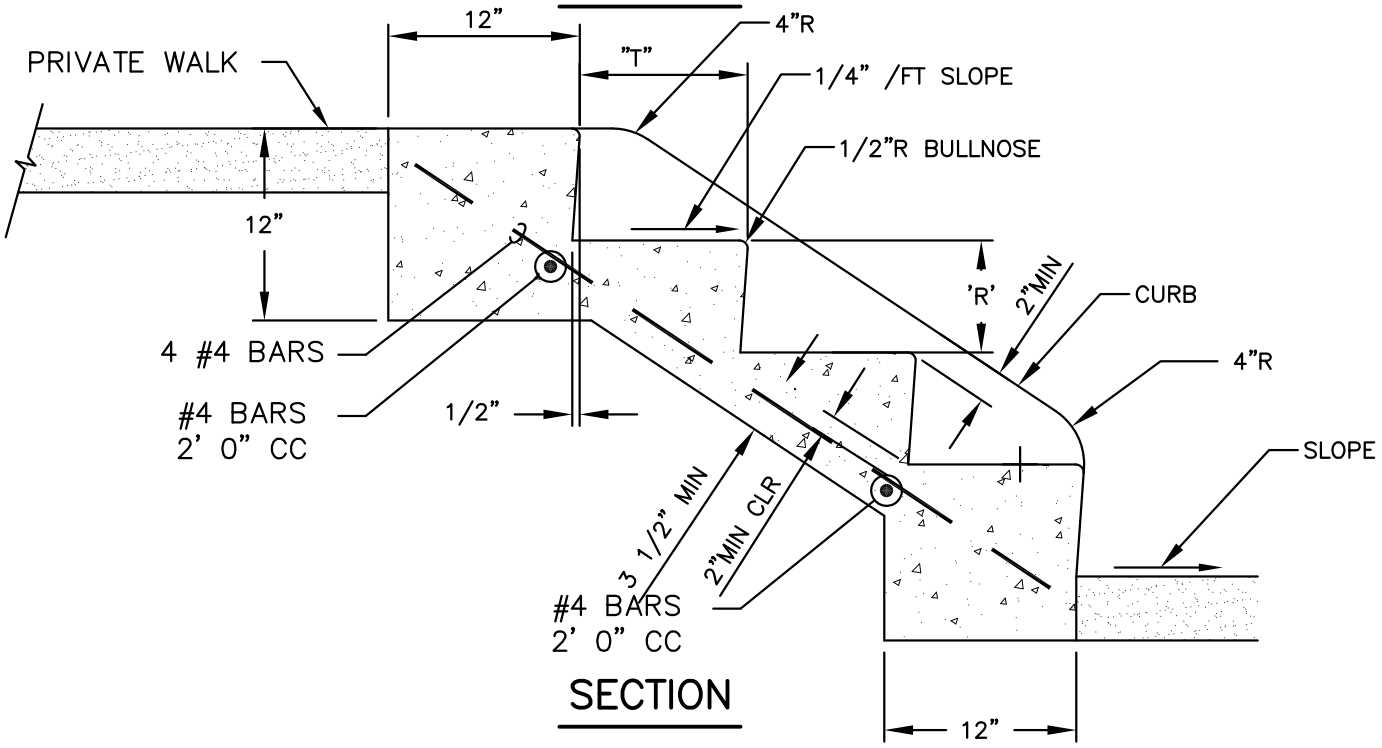

SECTION

NOTES:

1. STEPS SHALL BE 4'-0" MIN. WIDE, CURB TO CURB, PLUS 6" CURBS ON EACH SIDE.
2. CEMENT CONCRETE SHALL BE CLASS 3000, TROWEL FINISHED.
3. NUMBER OF STEPS SHALL SUIT INDIVIDUAL CONDITIONS, WITH TREAD AND RISER DIMENSIONS TO SUIT THE GRADE.
4. RISERS (R) SHALL BE 5" MIN. 7" MAX., TREADS (T) (2R+T SHOULD EQUAL BETWEEN 24 AND 25) SHALL BE 11" MIN. 14" MAX.
5. STEPS WITH MORE THAN 4 RISERS SHALL HAVE RAILINGS (BOTH SIDES) INSTALLED PER STD DRAWING #332

CITY OF EVERETT PUBLIC WORKS DEPARTMENT	CEMENT CONCRETE STEPS	7-2-2013 Date:
		331 COE Std Dwg:

T:\ACad\eps-coe design & constr specs for development\CURRENT\std detail dwgs\Dwg Files\STD331.dwg, 2/21/2014 10:36:29 AM

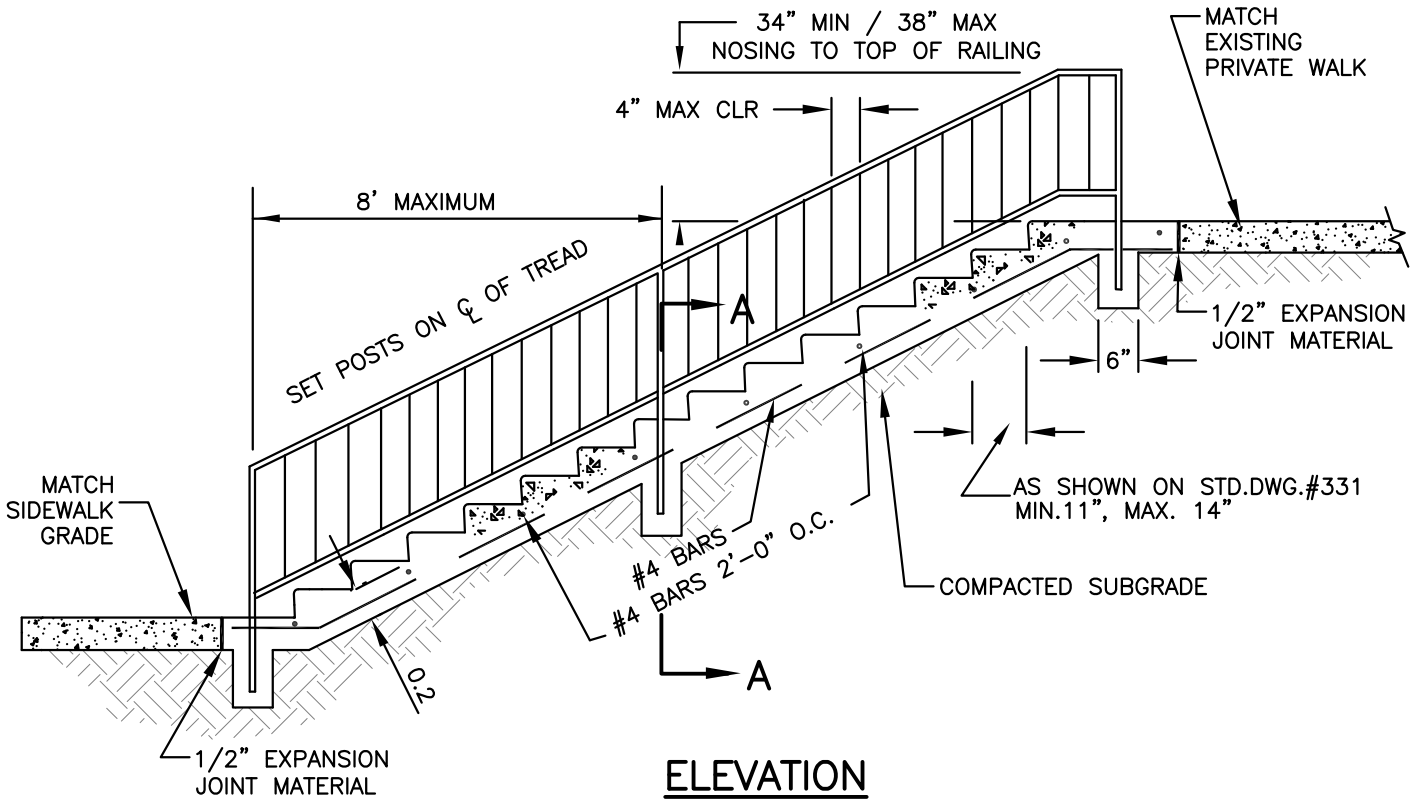

ELEVATION

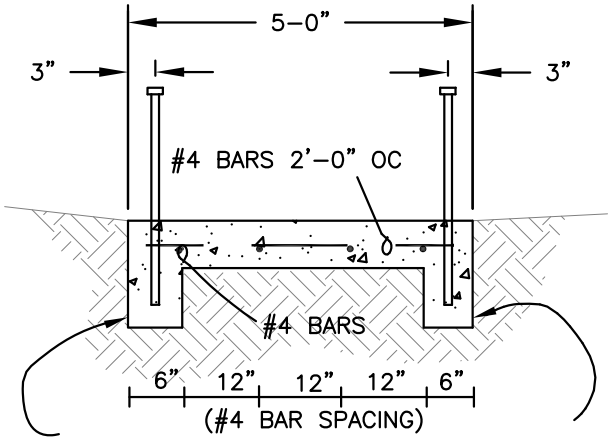

WIDTH OF CONCRETE STAIRS OR LANDING
TO BE FINISHED TO THIS LINE.

SECTION A–A

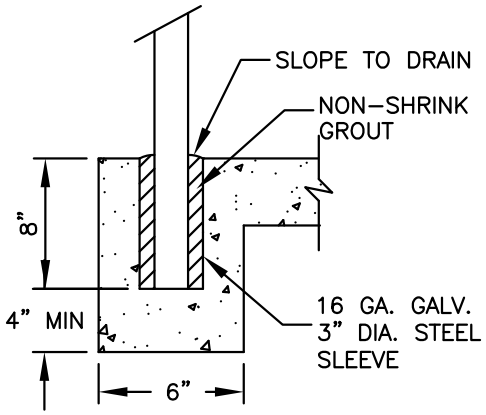

POST DETAIL

NOTES:

1. CEMENT CONCRETE STEPS AND CURBS SHALL BE CONSTRUCTED WITH COMMERCIAL MIX CONCRETE AS CALLED OUT IN WSDOT STD SPECS. AND AS SHOWN ON STANDARD DRAWING NO. 331.
2. HEIGHT OF RAILING SHALL BE 34" MINIMUM, 38" MAXIMUM TOP OF NOSING TO TOP OF RAILING
3. USE PEDESTRIAN OR ORNAMENTAL HANDRAIL AS DIRECTED BY THE CITY ENGINEER. SEE STANDARD DRAWING NOS. 325, 325A, AND 326.
4. CLEAR SPACE BETWEEN BALUSTERS SHALL BE A MAXIMUM OF 4".
5. STEPS WITH MORE THAN 4 RISERS SHALL HAVE HANDRAIL ON BOTH SIDES.

CITY OF EVERETT **PUBLIC WORKS DEPARTMENT**	CEMENT CONCRETE STAIRWAY CONSTRUCTION DETAILS	7-2-2013 Date: 332 COE Std Dwg:

T:\ACad\eps-coe design & constr specs for development\CURRENT\std detail dwgs\Dwg Files\STD332.dwg, 2/21/2014 10:37:38 AM

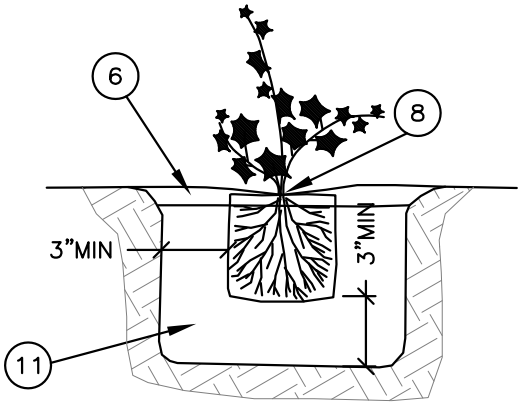

GROUND COVER

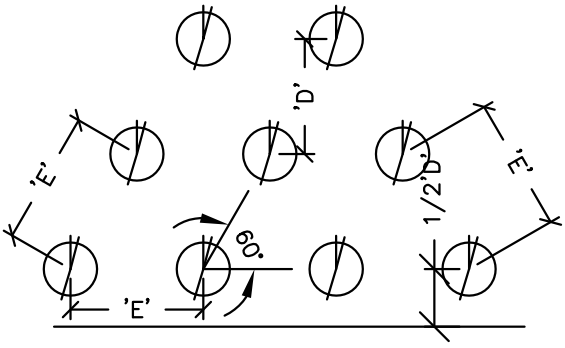

TRIANGULAR SPACING

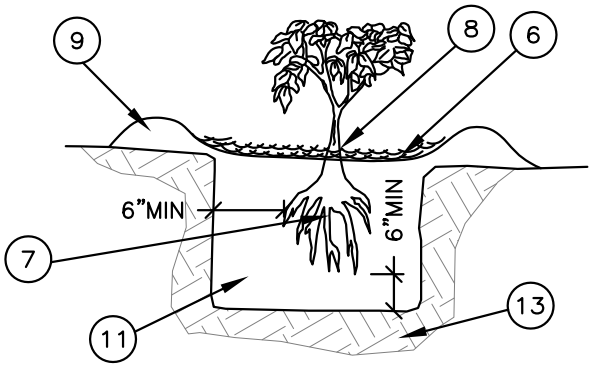

SCRUB

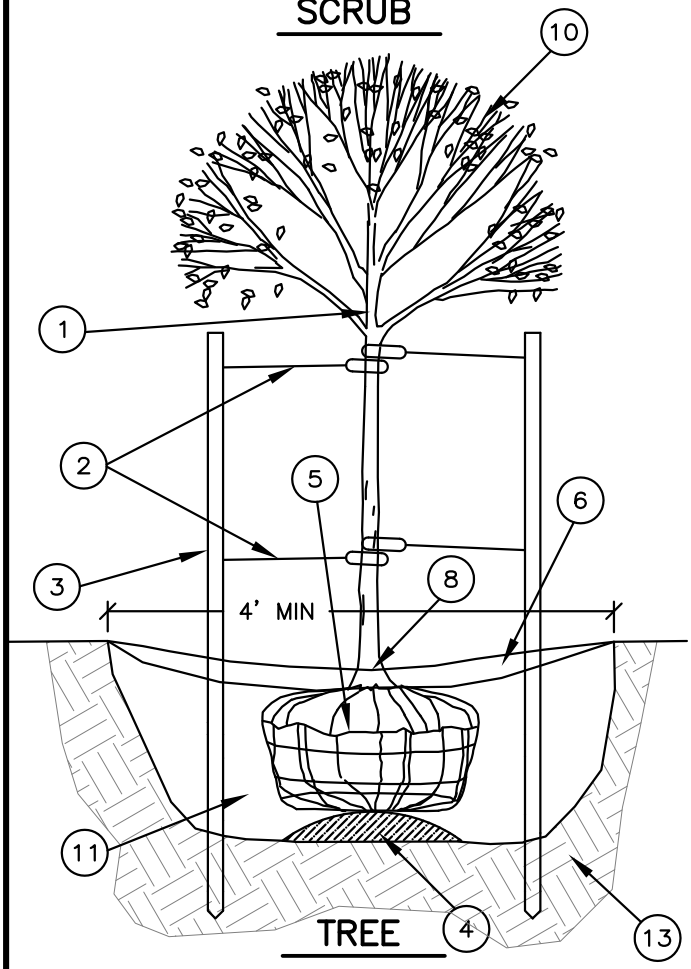

TREE

NOTES:

1. APPROVED EVERETT SMALL OR MEDIUM TREE SPECIES.
2. PLASTIC TREE STRAPS (1/2" WIDE). UPPER TIES 3" MIN (6" MAX) FROM TOP OF STAKE. IF UPPER TIE IS MORE THAN 4' ABOVE FINISHED GROUND, LOCATE LOWER TIES MIDPOINT UPPER TIE AND FINISHED GRADE. TOP STRAP SHALL BE A MIN. OF 1/3 OF THE TREE HEIGHT.
3. TWO STAKES MIN. 2"X2"X8' CEDAR/DOUGLAS FIR OR 2"X8' ROUND POLES. POUND 1' MIN. INTO UNDISTURBED OR CONSTRUCTED SOIL. TRIPLE STAKE DECIDUOUS TREES LARGER THAN 2" CALIPER.
4. PLACE ROOT BALL ON 6" MIN COMPACTED TOPSOIL MIX.
5. REMOVE TOP 1/3 OF BURLAP AND WIRE BASKET, REMOVE ALL TIES.
6. 2" MIN BARK MULCH OVER ALL PLANTED AREAS.
7. MINIMUM ROOT SPREAD TO BE IN ACCORDANCE WITH "AMERICAN STANDARDS FOR NURSERY STOCK". PRUNE ALL DAMAGED, DISEASED OR WEAK ROOTS. DO NOT ALLOW ROOTS TO DRY OUT DURING INSTALLATION PROCESS. SOAK ROOTS IN WATER OVERNIGHT BEFORE PLANTING ANY BARE ROOT STOCK.
8. SHRUBS AND TREES SHALL BE SLIGHTLY HIGHER IN RELATIONSHIP TO THE OLD SOIL MARK ON THE TRUNK AND THE FINISHED GRADE OF THE PLANTING. .
9. CREATE SAUCER WITH TOPSOIL (6"R MIN.)
10. IF NECESSARY, THIN BRANCHES BY 1/8 RETAINING NORMAL PLANT SHAPE
11. GENTLY COMPACTED PLANTING MIX (AS SPECIFIED).
12. ALL GROUND COVER/SHRUB SPACING SHALL BE EQUIDISTANT UNLESS OTHERWISE SPECIFIED. DISTANCE ON CENTER AS SPECIFIED 'E'. SPACING BETWEEN ROWS 'D' AS SPECIFIED. START FIRST ROW OF PLANTING AT 1/2 'D' FROM PLANTING BORDER.
13. UNDISTURBED NATIVE SOIL OR CONSTRUCTED SOIL.

EVERETT **CITY OF EVERETT** **PUBLIC WORKS DEPARTMENT**	PLANTING FOR TREES, SHRUBS & GROUND COVER SHEET 1 OF 3	2-6-2009 Date: 333 COE Std Dwg:

T:\ACad\eps-coe design & constr specs for development\CURRENT\std detail dwgs\Dwg Files\STD333.dwg, 2/21/2014 10:40:08 AM

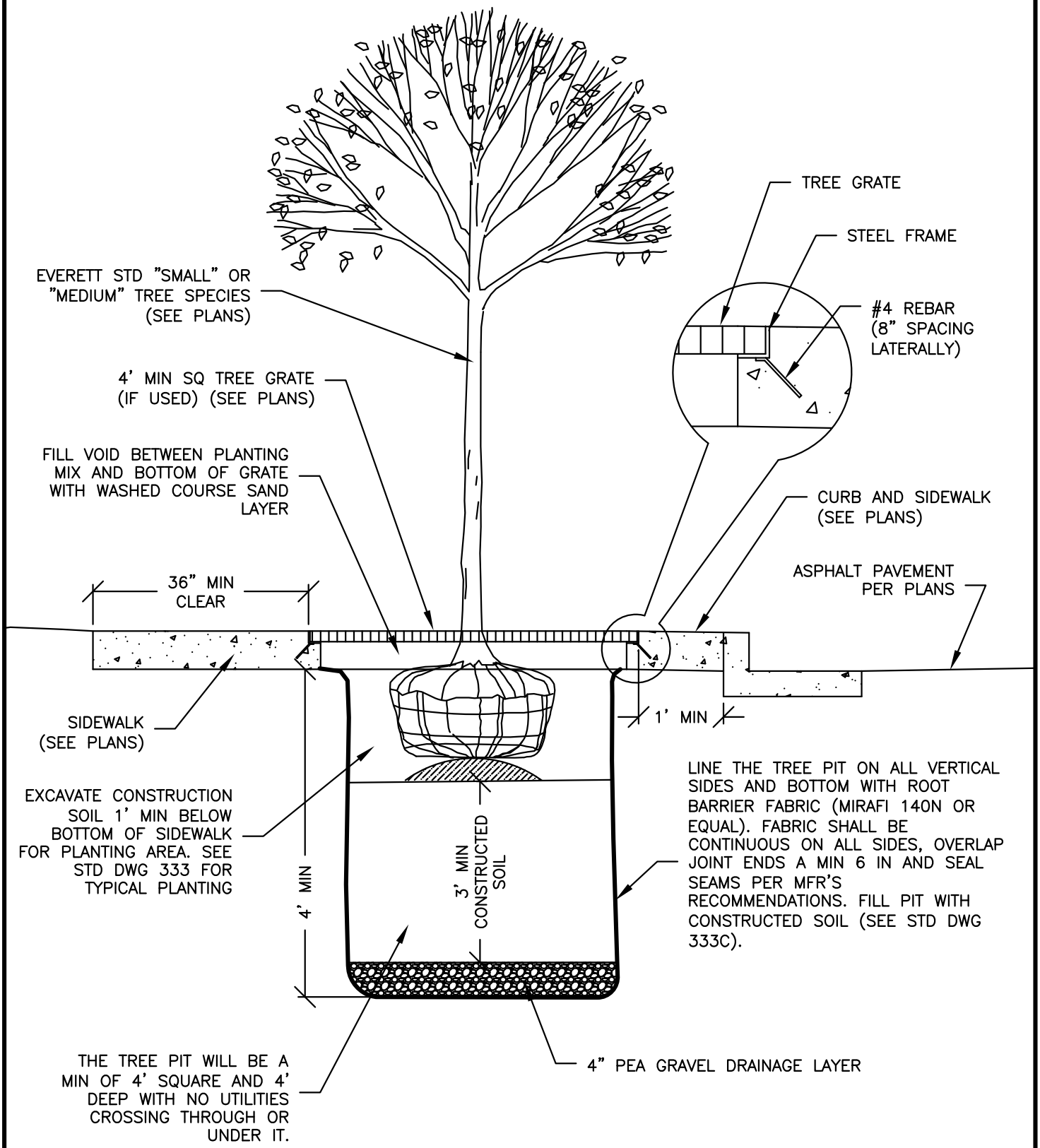

CITY OF EVERETT
PUBLIC WORKS DEPARTMENT

TREE WELL IN SIDEWALK AREA

SHEET 2 OF 3

7-2-2013
Date:

333
COE Std Dwg:

T:\ACad\eps-coe design & constr specs for development\CURRENT\std detail dwgs\Dwg Files\STD333.dwg, 2/21/2014 10:40:34 AM

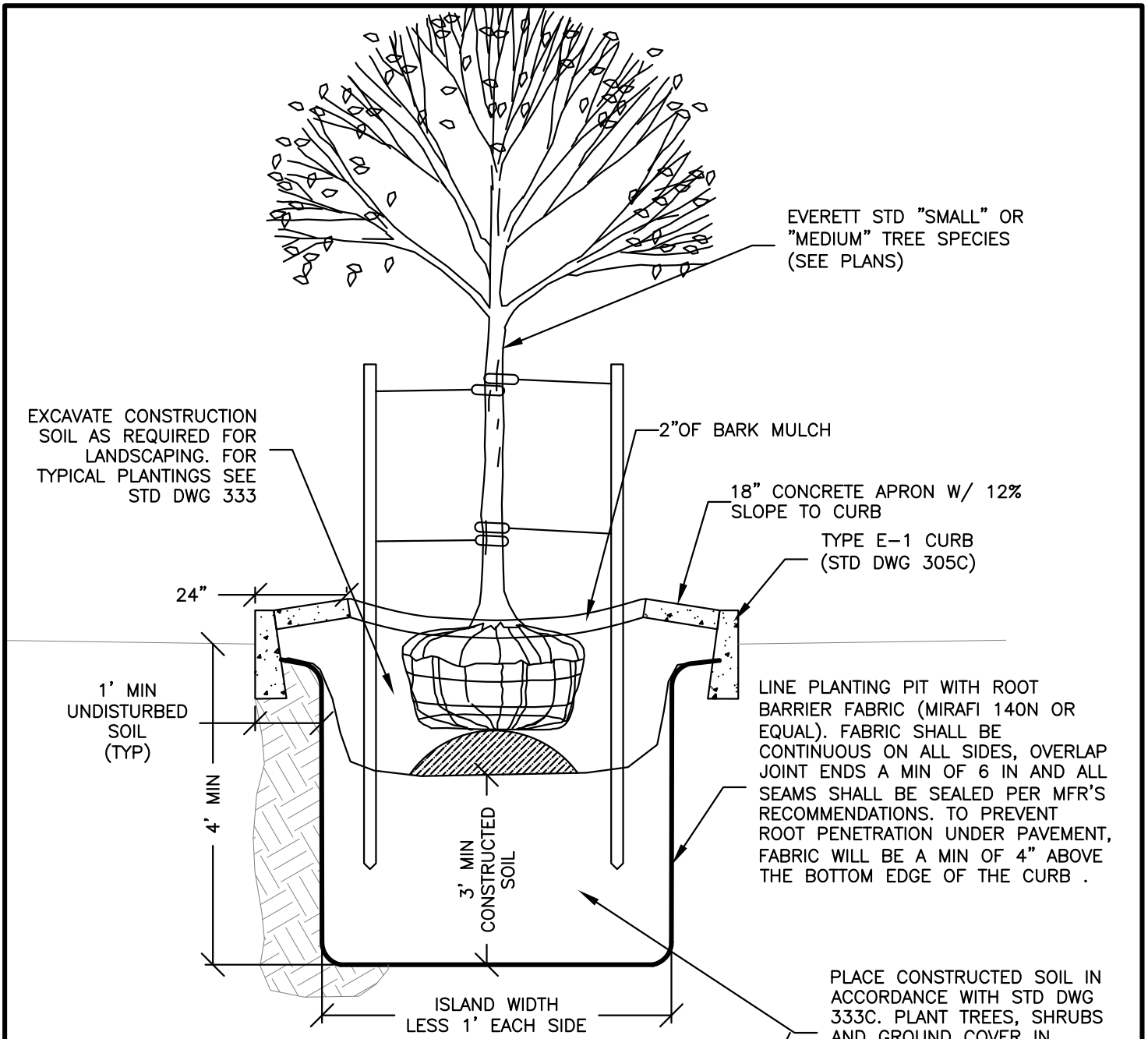

TYP CROSS SECTION

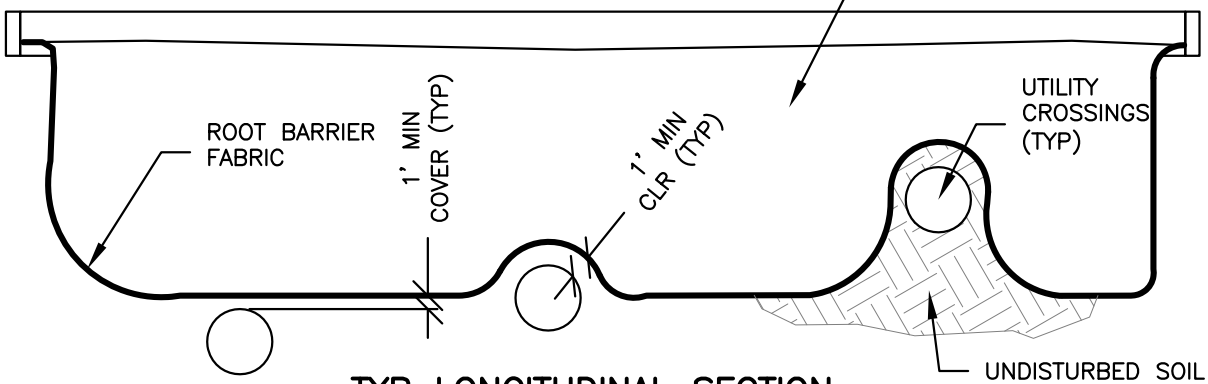

TYP LONGITUDINAL SECTION

CITY OF EVERETT
PUBLIC WORKS DEPARTMENT

TREE WELL IN RAISED TRAFFIC ISLAND

SHEET 3 OF 3

7-2-2013
Date:

333
COE Std Dwg:

T:\ACad\eps-coe design & constr specs for development\CURRENT\std detail dwgs\Dwg Files\STD333.dwg, 2/21/2014 10:40:59 AM

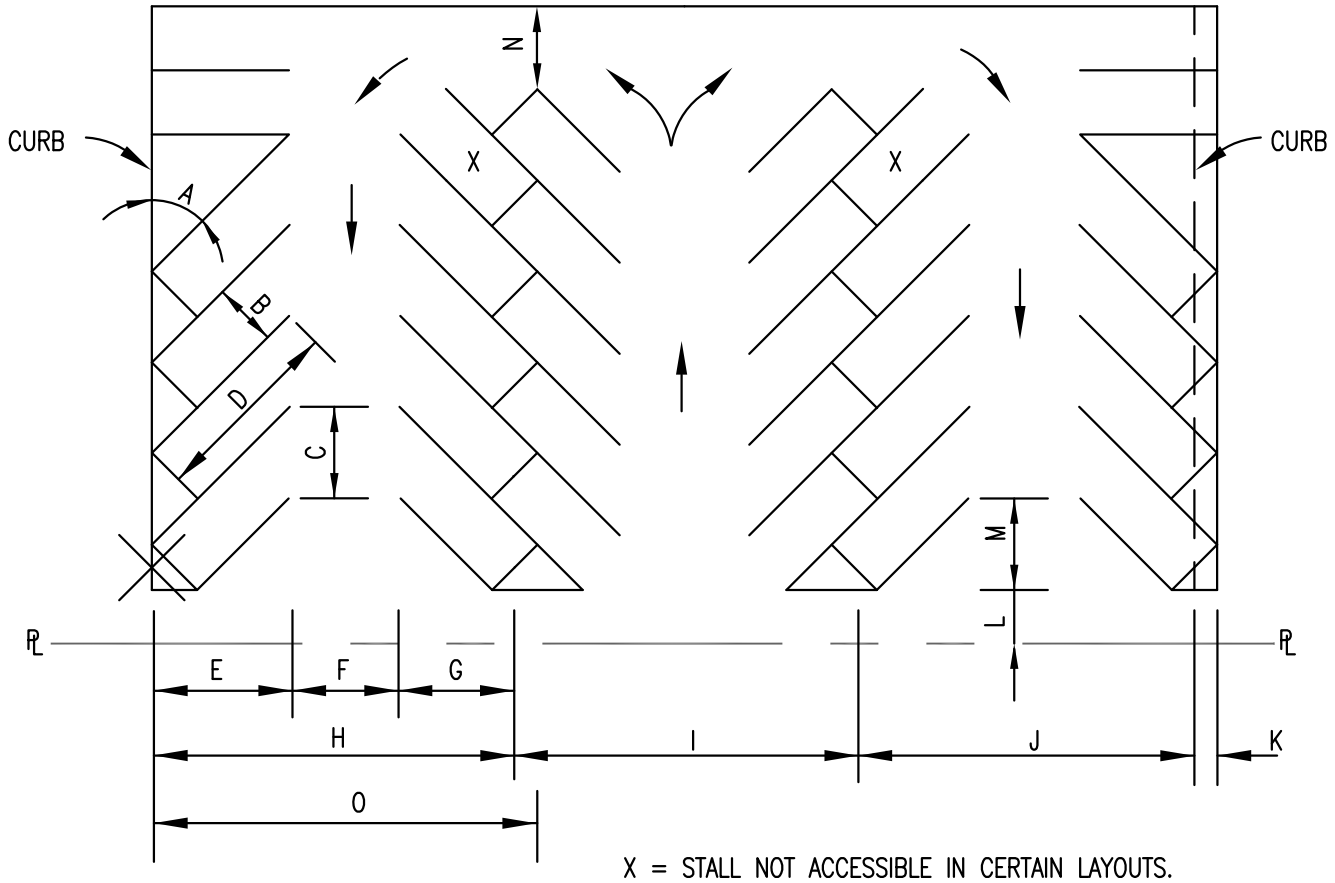

X = STALL NOT ACCESSIBLE IN CERTAIN LAYOUTS.

LEGEND:

A = PARKING ANGLE
B = STALL WIDTH, PERPENDICULAR TO STALL LINES
C = STALL WIDTH, PARALLEL TO AISLE
D = LENGTH OF STALL LINE
E = STALL DEPTH,PERPENDICULAR TO AISLE
F = AISLE WIDTH, BETWEEN STALL LINES
G = STALL DEPTH, INTERLOCKING
H = MODULE, WALL TO INTERLOCK
I = MODULE, INTERLOCK TO INTERLOCK
J = MODULE, INTERLOCK TO CURB
K = BUMPER OVERHANG
L = OFFSET
M = SETBACK
N = CROSS AISLE, ONE WAY
N = CROSS AISLE, TWO WAY
O = MODULE, WALL TO WALL

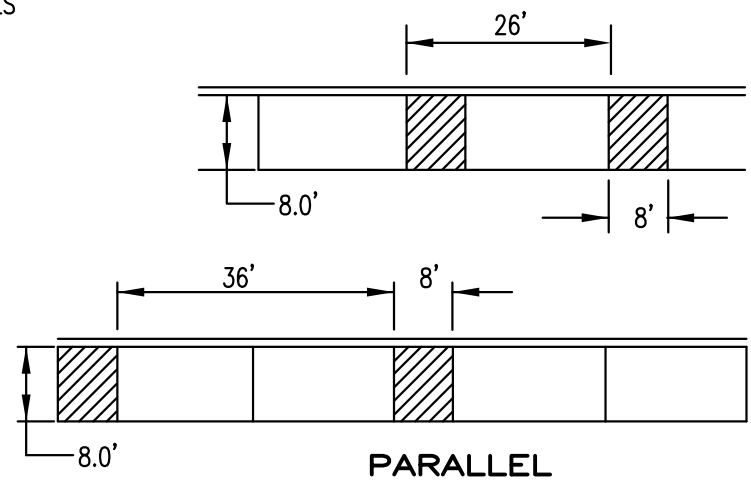

NOTES:

1. SEE SECTION 3–5 OF DESIGN AND CONSTRUCTION STANDARDS AND SPECIFICATIONS FOR FURTHER CONDITIONS AND RESTRICTIONS.

CITY OF EVERETT PUBLIC WORKS DEPARTMENT	TYPICAL PARKING LAYOUT SHEET 1 OF 2	7-2-2013 Date: 334 COE Std Dwg:

T:\ACad\eps-coe design & constr specs for development\CURRENT\std detail dwgs\Dwg Files\STD334.dwg, 2/21/2014 10:41:51 AM

STALL GEOMETRY

PARKING ANGLE (DEGREES) A	STALL WIDTH PERPENDICULAR TO STALL LINES B	STALL WIDTH PARALLEL TO AISLE C	LENGTH OF STALL LINE D	STALL DEPTH PERPENDICULAR TO AISLE E	AISLE WIDTH BETWEEN STALL LINES (SEE NOTE 1) F	STALL DEPTH INTERLOCKING G	MODULE, WALL TO INTERLOCK H	MODULE, INTERLOCK TO INTERLOCK I	MODULE, INTERLOCK TO CURB J	BUMPER, OVERHANG (TYPICAL) K	OFFSET L	SETBACK M	CROSS AISLE (ONE WAY) N	CROSS AISLE (TWO WAY) N	MODULE, WALL TO WALL O
45°	8.5	12.0	27.5	19.5	13	16.5	49.0	46	47.0	2.0	6.4	13.1	14	24	52
	9.0	12.7	27.5	19.5	12	16.5	48.0	45	46.0	2.0	6.4	13.1	14	24	51
	9.5	13.4	27.5	19.5	11	16.5	47.0	44	45.0	2.0	6.4	13.1	14	24	50
C	8.0	11.3	24.0	17.0	11					2.0			14	24	45
H	13.0	18.3	27.5	19.5	11					2.0			14	24	
V	16.0	22.5	32.0	22.6	12					2.0			14	24	
60°	8.5	9.8	23.7	20.5	18	18.5	57.0	55	54.7	2.3	2.6	9.3	14	24	59
	9.0	10.4	23.7	20.5	16	18.5	55.0	53	53.7	2.3	2.6	9.3	14	24	57
	9.5	11.0	23.7	20.5	15	18.5	54.0	52	51.7	2.3	2.6	9.3	14	24	56
C	8.0	9.3	20.6	17.8	15					2.3			14	24	51
H	13.0	15.0	23.7	20.5	15					2.3			14	24	
V	16.0	18.5	26.9	23.3	16					2.3			14	24	
75°	8.5	8.8	20.9	20.0	25	19.0	64.0	63	61.5	2.5	.6	4.8	14	24	65
	9.0	9.3	20.9	20.0	23	19.0	62.0	61	59.5	2.5	.6	4.8	14	24	63
	9.5	9.8	20.9	20.0	22	19.0	61.0	60	58.5	2.5	.6	4.8	14	24	62
C	8.0	8.3	18.1	17.5	19					2.5			14	24	54
H	13.0	13.5	20.9	20.0	22					2.5			14	24	
V	16.0	16.6	23.2	22.4	24					2.5			14	24	
90°	8.5	8.5	18.5	18.5	28	18.5	65	65	62.5	2.5	0	0	14	24	65
	9.0	9.0	18.5	18.5	26	18.5	63	63	60.5	2.5	0	0	14	24	63
	9.5	9.5	18.5	18.5	25	18.5	62	62	59.5	2.5	0	0	14	24	62
C	8.0	8.0	16.0	16.0	23					2.5		0	14	24	55
H	13.0	13.0	18.5	18.5	25					2.5		11	14	24	
V	16.0	16.0	20.0	20.0	24					2.5			14	24	

NOTES:

1. AISLE WIDTH MAY BE REQUIRED TO BE WIDER IF MULTIPLE UTILITY LINES ARE LOCATED WITHIN THE AISLE CORRIDOR.
2. C = COMPACT SPACE, SEE SECTION 3–5 OF THE DESIGN AND CONSTRUCTION STANDARDS AND SPECIFICATIONS FOR DETAILS AND RESTRICTIONS. EACH SPACE SHALL BE IDENTIFIED BY PAINTING "COMPACT" ON PAVEMENT.
3. H = HANDICAP SPACE, PER ADAAG.
4. V = HANDICAP VAN ACCESSIBLE SPACE, PER ADAAG.

CITY OF EVERETT
PUBLIC WORKS DEPARTMENT

PARKING LOT DETAILS
SHEET 2 OF 2

7-2-2013
Date:

334
COE Std Dwg:

T:\ACad\eps-coe design & constr specs for development\CURRENT\std detail dwgs\Dwg Files\STD334.dwg, 2/21/2014 10:42:19 AM

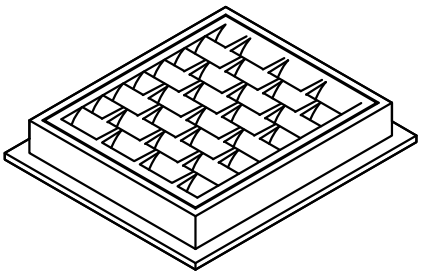

FRAME AND VANED GRATE

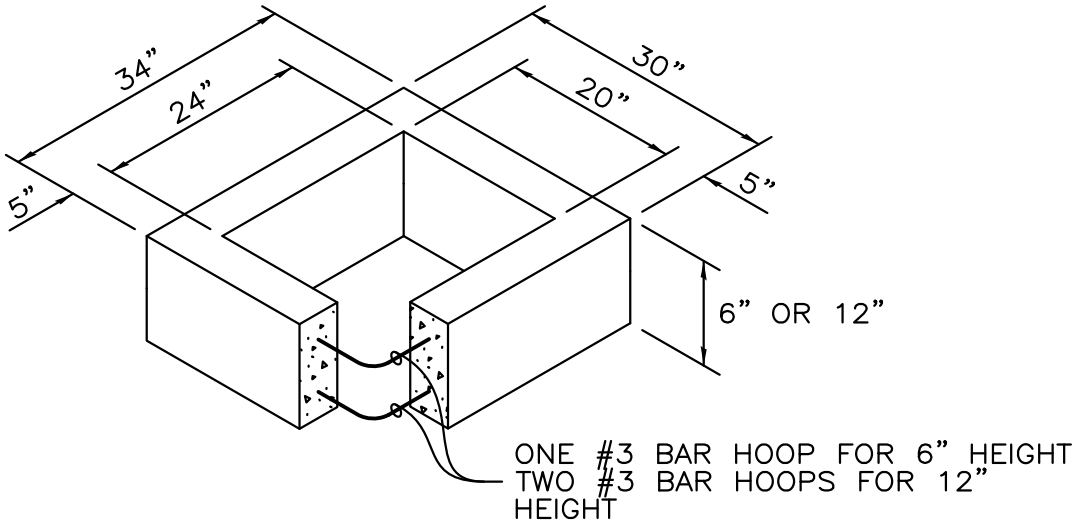

RECTANGULAR ADJUSTMENT SECTION

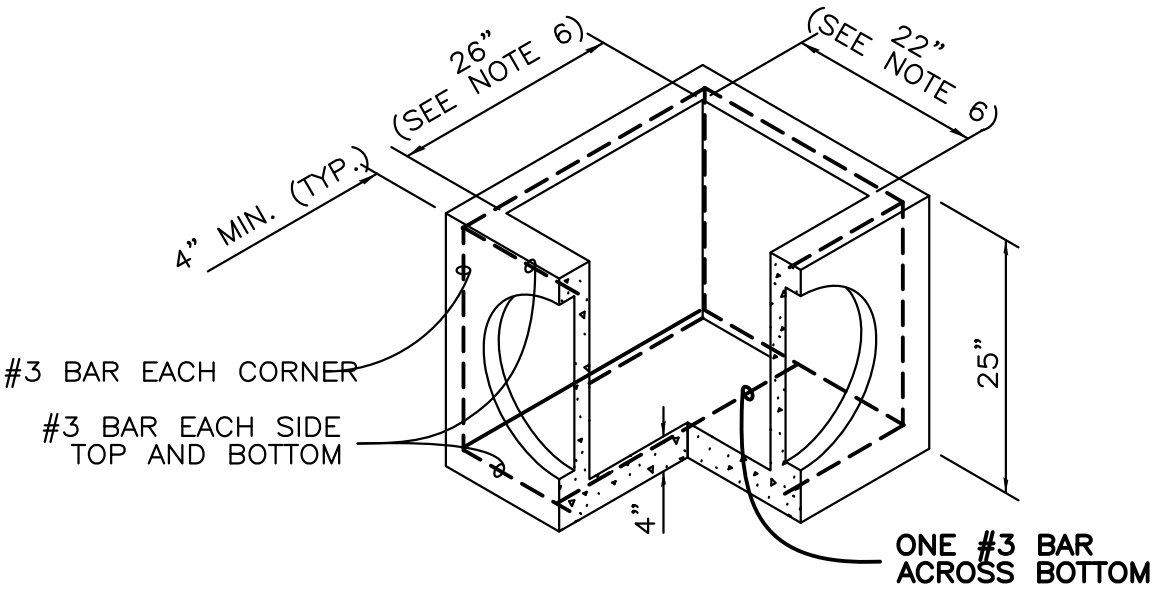

PRECAST BASE SECTION

WSDOT STD PLAN B-25.60, ACCEPTABLE SUBSTITUTE

CITY OF EVERETT PUBLIC WORKS DEPARTMENT	PRECAST CONCRETE INLET SHEET 1 OF 2	12-03-2010 Date: 401 COE Std Dwg:

T:\ACad\eps-coe design & constr specs for development\CURRENT\std detail dwgs\Dwg Files\STD401.dwg, 2/21/2014 10:43:13 AM

NOTES

1. AS ACCEPTABLE ALTERNATIVES TO THE REBAR SHOWN IN THE PRECAST BASE SECTION, FIBERS (PLACED ACCORDING TO THE STANDARD SPECIFICATIONS), OR WIRE MESH HAVING A MINIMUM AREA OF 0.12 SQUARE INCHES PER FOOT SHALL BE USED WITH THE MINIMUM REQUIRED REBAR SHOWN IN THE ALTERNATIVE PRECAST BASE SECTION. WIRE MESH SHALL NOT BE PLACED IN THE KNOCKOUTS.

2. THE KNOCKOUT DIAMETER SHALL NOT BE GREATER THAN 18". KNOCKOUTS SHALL HAVE A WALL THICKNESS OF 2" MINIMUM TO 2.5" MAXIMUM. PROVIDE A 1.5" MINIMUM GAP BETWEEN THE KNOCKOUT WALL AND THE OUTSIDE OF THE PIPE. AFTER THE PIPE IS INSTALLED, FILL THE GAP WITH JOINT MORTAR IN ACCORDANCE WITH WSDOT STANDARD SPECIFICATION 9-04.3.

3. THE MAXIMUM DEPTH FROM THE FINISHED GRADE TO THE LOWEST PIPE INVERT SHALL BE 5'.

4. THE FRAME AND GRATE MAY BE INSTALLED WITH THE FLANGE UP OR DOWN. THE FRAME MAY BE CAST INTO THE ADJUSTMENT SECTION.

5. THE PRECAST BASE SECTION MAY HAVE A ROUNDED FLOOR, AND THE WALLS MAY BE SLOPED AT A RATE OF 1:24 OR STEEPER.

6. THE OPENING SHALL BE MEASURED AT THE TOP OF THE PRECAST BASE SECTION.

7. ALL PICKUP HOLES SHALL BE GROUTED FULL AFTER THE INLET HAS BEEN PLACED.

PIPE ALLOWANCES

PIPE MATERIAL	MAXIMUM INSIDE DIAMETER
REINFORCED OR PLAIN CONCRETE	12"
ALL METAL PIPE	15"
CPSSP * (WSDOT STD. SPEC. 9-05.20)	12"
SOLID WALL PVC (WSDOT STD. SPEC. 9-05.12(1))	15"
PROFILE WALL PVC (WSDOT STD. SPEC. 9-05.12(2))	15"

*CORRUGATED POLYETHYLENE STORM SEWER PIPE

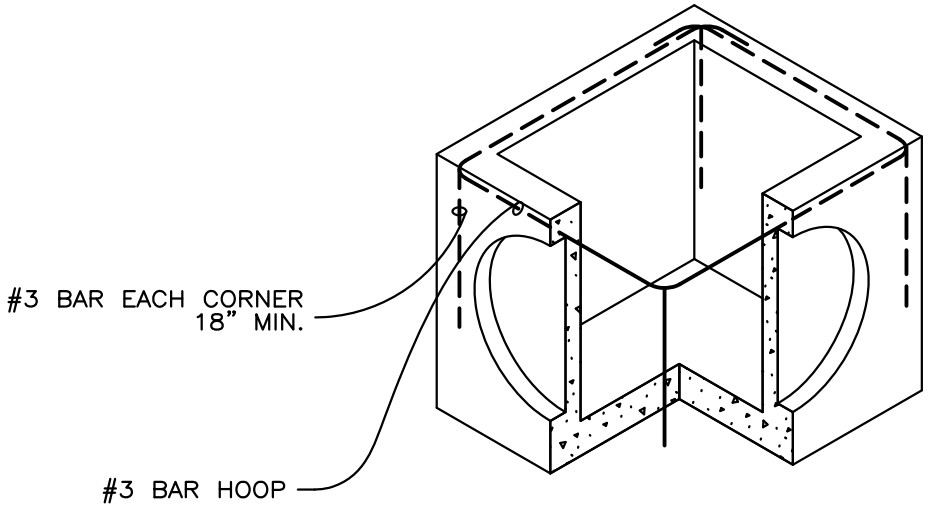

SEE NOTE 1

ALTERNATIVE PRECAST BASE SECTION

WSDOT STD PLAN B-25.60, ACCEPTABLE SUBSTITUTE

CITY OF EVERETT
PUBLIC WORKS DEPARTMENT

PRECAST CONCRETE INLET
SHEET 2 OF 2

12-03-2010
Date:

401
COE Std Dwg:

T:\ACad\eps-coe design & constr specs for development\CURRENT\std detail dwgs\Dwg Files\STD401.dwg, 2/21/2014 10:43:36 AM

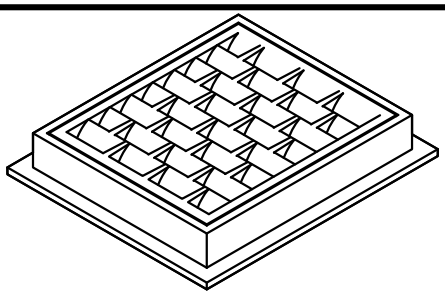

FRAME AND VANED GRATE

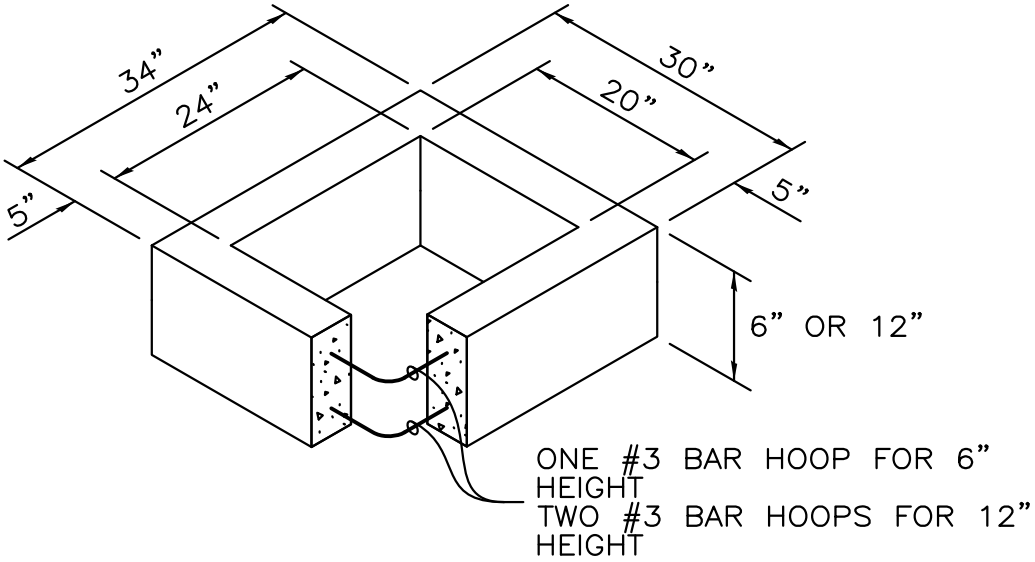

RECTANGULAR ADJUSTMENT SECTION

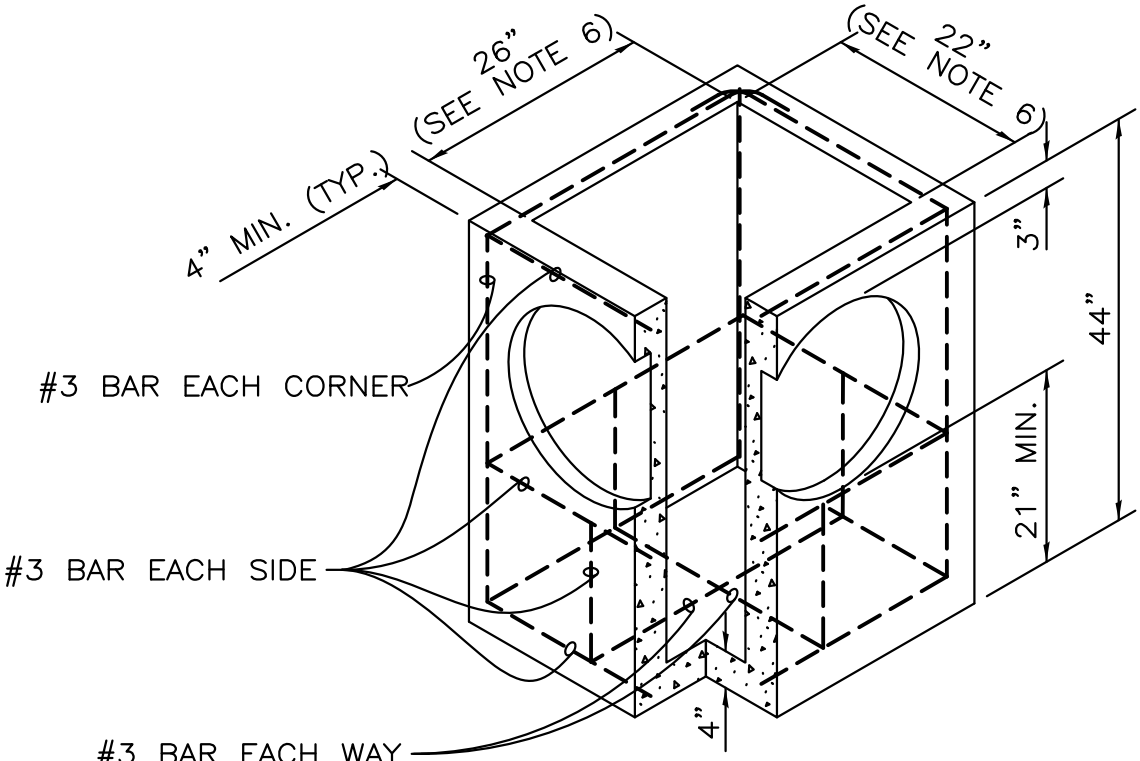

PRECAST BASE SECTION

WSDOT STD PLAN B-5.20, TYPE 1
ACCEPTABLE SUBSTITUTE

CITY OF EVERETT
PUBLIC WORKS DEPARTMENT

CATCH BASIN TYPE A
SHEET 1 OF 2

12-03-2010
Date:

402
COE Std Dwg:

T:\ACad\eps-coe design & constr specs for development\CURRENT\std detail dwgs\Dwg Files\STD402.dwg, 2/21/2014 10:44:22 AM

NOTES

1. AS ACCEPTABLE ALTERNATIVES TO THE REBAR SHOWN IN THE PRECAST BASE SECTION, FIBERS (PLACED ACCORDING TO THE STANDARD SPECIFICATIONS), OR WIRE MESH HAVING A MINIMUM AREA OF 0.12 SQUARE INCHES PER FOOT SHALL BE USED WITH THE MINIMUM REQUIRED REBAR SHOWN IN THE ALTERNATIVE PRECAST BASE SECTION. WIRE MESH SHALL NOT BE PLACED IN THE KNOCKOUTS.
2. THE KNOCKOUT DIAMETER SHALL NOT BE GREATER THAN 20". KNOCKOUTS SHALL HAVE A WALL THICKNESS OF 2" MINIMUM TO 2.5" MAXIMUM. PROVIDE A 1.5" MINIMUM GAP BETWEEN THE KNOCKOUT WALL AND THE OUTSIDE OF THE PIPE. AFTER THE PIPE IS INSTALLED, FILL THE GAP WITH JOINT MORTAR IN ACCORDANCE WITH STANDARD WSDOT SPECIFICATION 9-04.3.
3. THE MAXIMUM DEPTH FROM THE FINISHED GRADE TO THE LOWEST PIPE INVERT SHALL BE 5'.
4. THE FRAME AND GRATE MAY BE INSTALLED WITH THE FLANGE UP OR DOWN. THE FRAME MAY BE CAST INTO THE ADJUSTMENT SECTION.
5. THE PRECAST BASE SECTION MAY HAVE A ROUNDED FLOOR, AND THE WALLS MAY BE SLOPED AT A RATE OF 1:24 OR STEEPER.
6. THE OPENING SHALL BE MEASURED AT THE TOP OF THE PRECAST BASE SECTION.
7. ALL PICKUP HOLES SHALL BE GROUTED FULL AFTER THE BASIN HAS BEEN PLACED.

PIPE ALLOWANCES

PIPE MATERIAL	MAXIMUM INSIDE DIAMETER
REINFORCED OR PLAIN CONCRETE	12"
ALL METAL PIPE	15"
CPSSP * (WSDOT STD. SPEC. 9-05.20)	12"
SOLID WALL PVC (WSDOT STD. SPEC. 9-05.12(1))	15"
PROFILE WALL PVC (WSDOT STD. SPEC. 9-05.12(2))	15"

*CORRUGATED POLYETHYLENE STORM SEWER PIPE

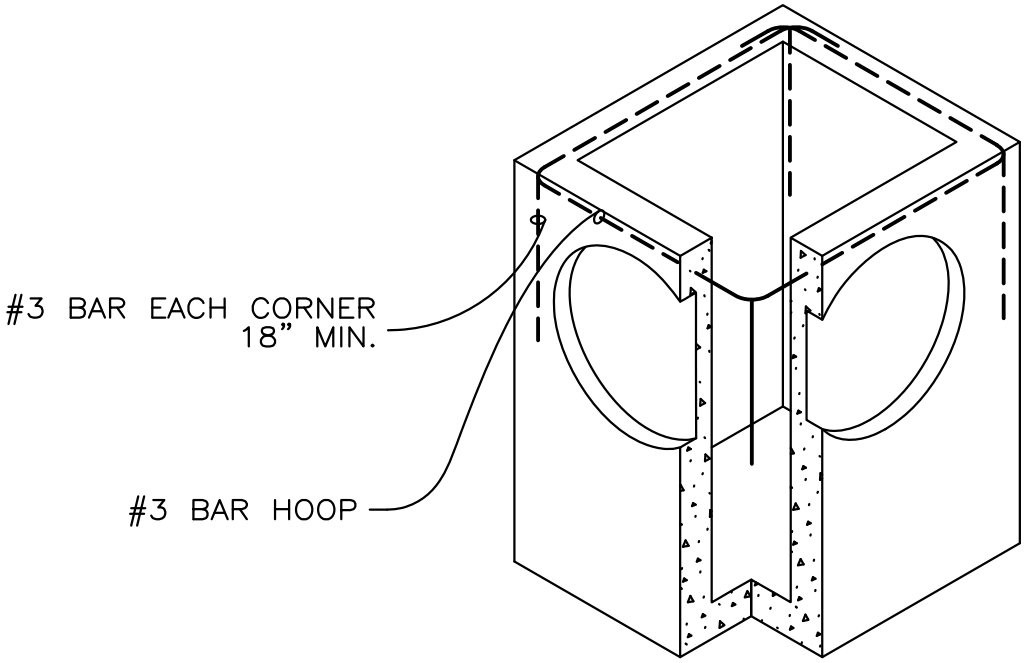

SEE NOTE 1

ALTERNATIVE PRECAST BASE SECTION

WSDOT STD PLAN B-5.20, TYPE 1
ACCEPTABLE SUBSTITUTE

CITY OF EVERETT
PUBLIC WORKS DEPARTMENT

CATCH BASIN TYPE A
SHEET 2 OF 2

12-03-2010
Date:

402
COE Std Dwg:

T:\ACad\eps-coe design & constr specs for development\CURRENT\std detail dwgs\Dwg Files\STD402.dwg, 2/21/2014 10:44:48 AM

FRAME AND VANED GRATE

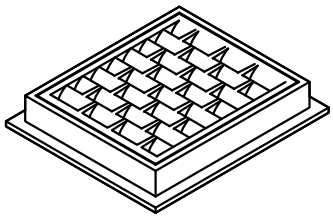

RECTANGULAR ADJUSTMENT SECTION

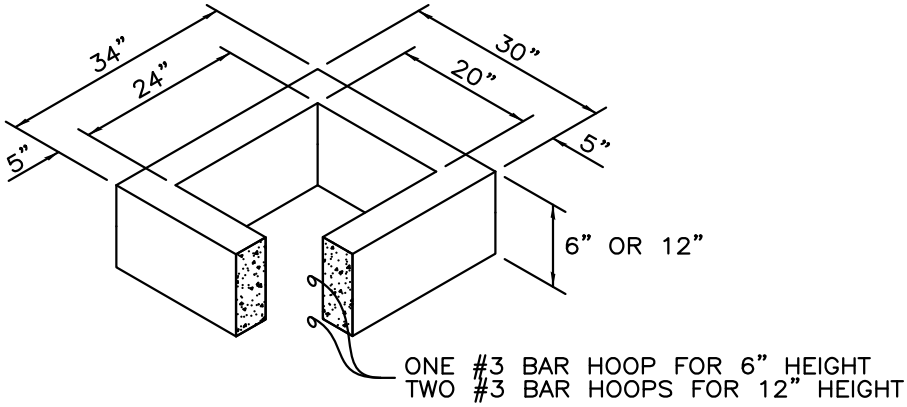

REDUCING SECTION

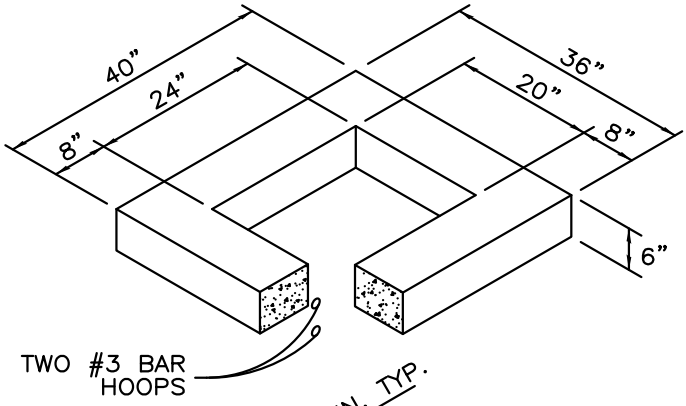

PRECAST BASE SECTION

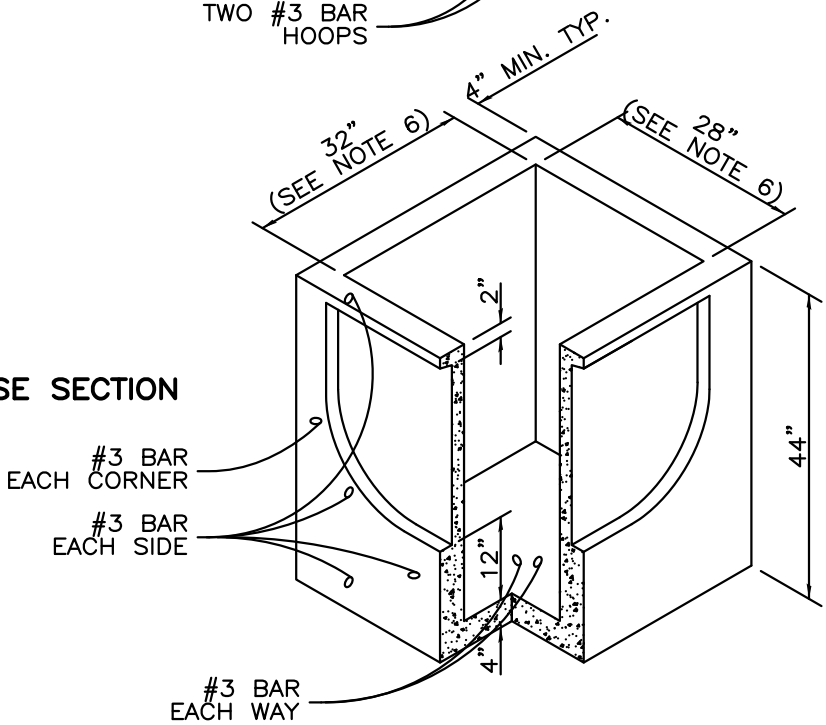

WSDOT STD PLAN B-5.40, TYPE 1L
ACCEPTABLE SUBSTITUTE

CITY OF EVERETT
PUBLIC WORKS DEPARTMENT

CATCH BASIN TYPE B
SHEET 1 OF 2

12-03-2010
Date:

403
COE Std Dwg:

T:\ACad\eps-coe design & constr specs for development\CURRENT\std detail dwgs\Dwg Files\STD403.dwg, 2/21/2014 10:46:02 AM

NOTES

1. AS ACCEPTABLE ALTERNATIVES TO THE REBAR SHOWN IN THE PRECAST BASE SECTION, FIBERS (PLACED ACCORDING TO THE STANDARD SPECIFICATIONS), OR WIRE MESH HAVING A MINIMUM AREA OF 0.12 SQUARE INCHES PER FOOT SHALL BE USED WITH THE MINIMUM REQUIRED REBAR SHOWN IN THE ALTERNATIVE PRECAST BASE SECTION. WIRE MESH SHALL NOT BE PLACED IN THE KNOCKOUTS.
2. THE KNOCKOUT DIAMETER SHALL NOT BE GREATER THAN 26". KNOCKOUTS SHALL HAVE A WALL THICKNESS OF 2" MINIMUM TO 2.5" MAXIMUM. PROVIDE A 1.5" MINIMUM GAP BETWEEN THE KNOCKOUT WALL AND THE OUTSIDE OF THE PIPE. AFTER THE PIPE IS INSTALLED, FILL THE GAP WITH JOINT MORTAR IN ACCORDANCE WITH STANDARD WSDOT SPECIFICATION 9-04.3.
3. THE MAXIMUM DEPTH FROM THE FINISHED GRADE TO THE LOWEST PIPE INVERT SHALL BE 5'.
4. THE FRAME AND GRATE MAY BE INSTALLED WITH THE FLANGE UP OR DOWN. THE FRAME MAY BE CAST INTO THE ADJUSTMENT SECTION.
5. THE PRECAST BASE SECTION MAY HAVE A ROUNDED FLOOR, AND THE WALLS MAY BE SLOPED AT A RATE OF 1:24 OR STEEPER.
6. THE OPENING SHALL BE MEASURED AT THE TOP OF THE PRECAST BASE SECTION.
7. ALL PICKUP HOLES SHALL BE GROUTED FULL AFTER THE BASIN HAS BEEN PLACED.

PIPE ALLOWANCES

PIPE MATERIAL	MAXIMUM INSIDE DIAMETER
REINFORCED OR PLAIN CONCRETE	18"
ALL METAL PIPE	21"
CPSSP * (WSDOT STD. SPEC. 9-05.20)	18"
SOLID WALL PVC (WSDOT STD. SPEC. 9-05.12(1))	21"
PROFILE WALL PVC (WSDOT STD. SPEC. 9-05.12(2))	21"

* CORRUGATED POLYETHYLENE STORM SEWER PIPE

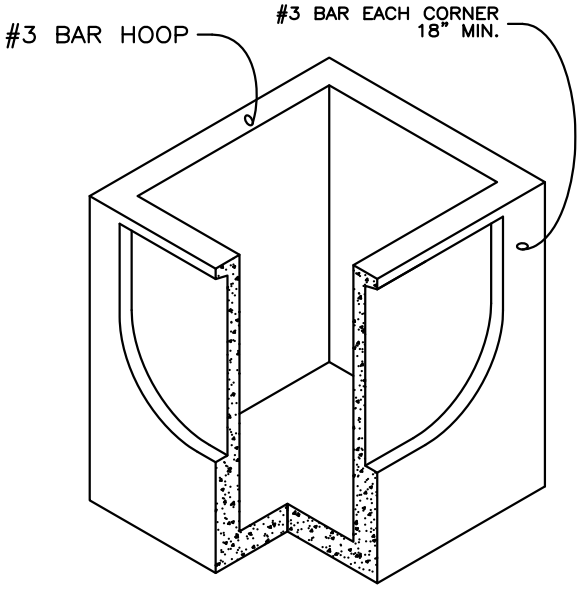

SEE NOTE 1

ALTERNATIVE PRECAST BASE SECTION

WSDOT STD PLAN B-5.40, TYPE 1L
ACCEPTABLE SUBSTITUTE

CITY OF EVERETT
PUBLIC WORKS DEPARTMENT

CATCH BASIN TYPE B
SHEET 2 OF 2

12-03-2010
Date:

403
COE Std Dwg:

T:\ACad\eps-coe design & constr specs for development\CURRENT\std detail dwgs\Dwg Files\STD403.dwg, 2/21/2014 10:46:27 AM

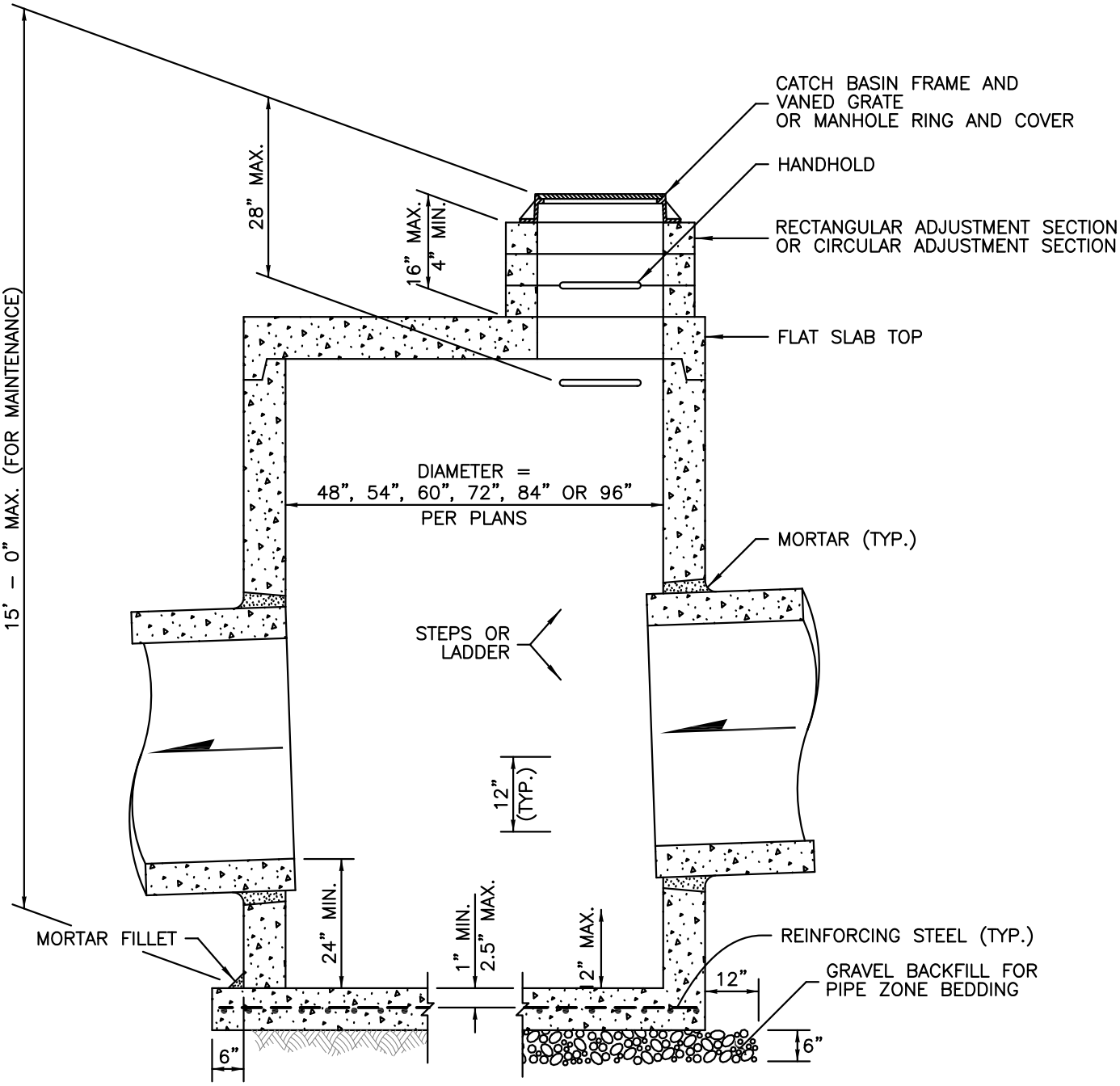

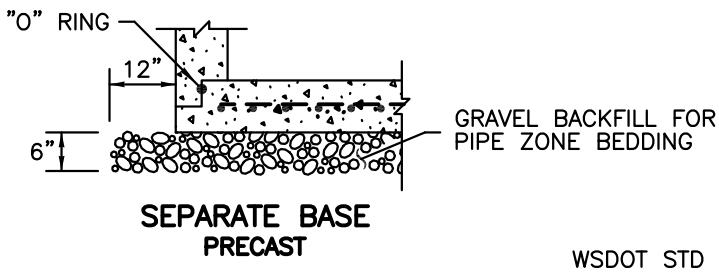

WSDOT STD PLAN B–10.20 TYPE 2
ACCEPTABLE SUBSTITUTE

CITY OF EVERETT
PUBLIC WORKS DEPARTMENT

CATCH BASIN TYPE 2
(48", 54", 60", 72", 84" & 96")
Sheet 1 of 2

12-03-2010
Date:

404
COE Std Dwg:

T:\ACad\eps-coe design & constr specs for development\CURRENT\std detail dwgs\Dwg Files\STD404.dwg, 2/21/2014 10:47:21 AM

NOTES

1. NO STEPS ARE REQUIRED WHEN HEIGHT IS 4' OR LESS.
2. THE BOTTOM OF THE PRECAST CATCH BASIN MAY BE SLOPED TO FACILITATE CLEANING.
3. THE RECTANGULAR FRAME AND GRATE MAY BE INSTALLED WITH THE FLANGE UP OR DOWN. THE FRAME MAY BE CAST INTO THE ADJUSTMENT SECTION.
4. KNOCKOUTS SHALL HAVE A WALL THICKNESS OF 2" MINIMUM TO 2.5" MAXIMUM. PROVIDE A 1.5" MINIMUM GAP BETWEEN THE KNOCKOUT WALL AND THE OUTSIDE OF THE PIPE. AFTER THE PIPE IS INSTALLED, FILL THE GAP WITH JOINT MORTAR IN ACCORDANCE WITH WSDOT STANDARD SPECIFICATION 9-04.3.

CATCH BASIN DIMENSIONS

CATCH BASIN DIAMETER	WALL THICKNESS	BASE THICKNESS	MAXIMUM KNOCKOUT SIZE	MINIMUM DISTANCE BETWEEN KNOCKOUTS	BASE REINFORCING STEEL in ²/ft. IN EACH DIRECTION	
					SEPARATE BASE	INTEGRAL BASE
48"	4"	6"	36"	8"	0.23	0.15
54"	4.5"	8"	42"	8"	0.19	0.19
60"	5"	8"	48"	8"	0.25	0.25
72"	6"	8"	60"	12"	0.35	0.24
84"	8"	12"	72"	12"	0.39	0.29
96"	8"	12"	84"	12"	0.39	0.29

PIPE ALLOWANCES

CATCH BASIN DIAMETER	PIPE MATERIAL WITH MAXIMUM INSIDE DIAMETER				
	CONCRETE	ALL METAL	CPSSP	SOLID WALL PVC	PROFILE WALL PVC
48"	24"	30"	24"	27"	30"
54"	30"	36"	30"	27"	36"
60"	36"	42"	36"	36"	42"
72"	42"	54"	42"	36"	48"
84"	54"	60"	54"	36"	48"
96"	60"	72"	60"	36"	48"

Corrugated Polyethylene Storm Sewer Pipe (Std. Spec. 9-05.20)
(Std. Spec. 9-05.12(1))
(Std. Spec. 9-05.12(2))

WSDOT STD PLAN B-10.20 TYPE 2
ACCEPTABLE SUBSTITUTE

CITY OF EVERETT
PUBLIC WORKS DEPARTMENT

CATCH BASIN TYPE 2
(48", 54", 60", 72", 84" & 96")
Sheet 2 of 2

12-03-2010
Date:

404
COE Std Dwg:

T:\ACad\eps-coe design & constr specs for development\CURRENT\std detail dwgs\Dwg Files\STD404.dwg, 2/21/2014 10:47:42 AM

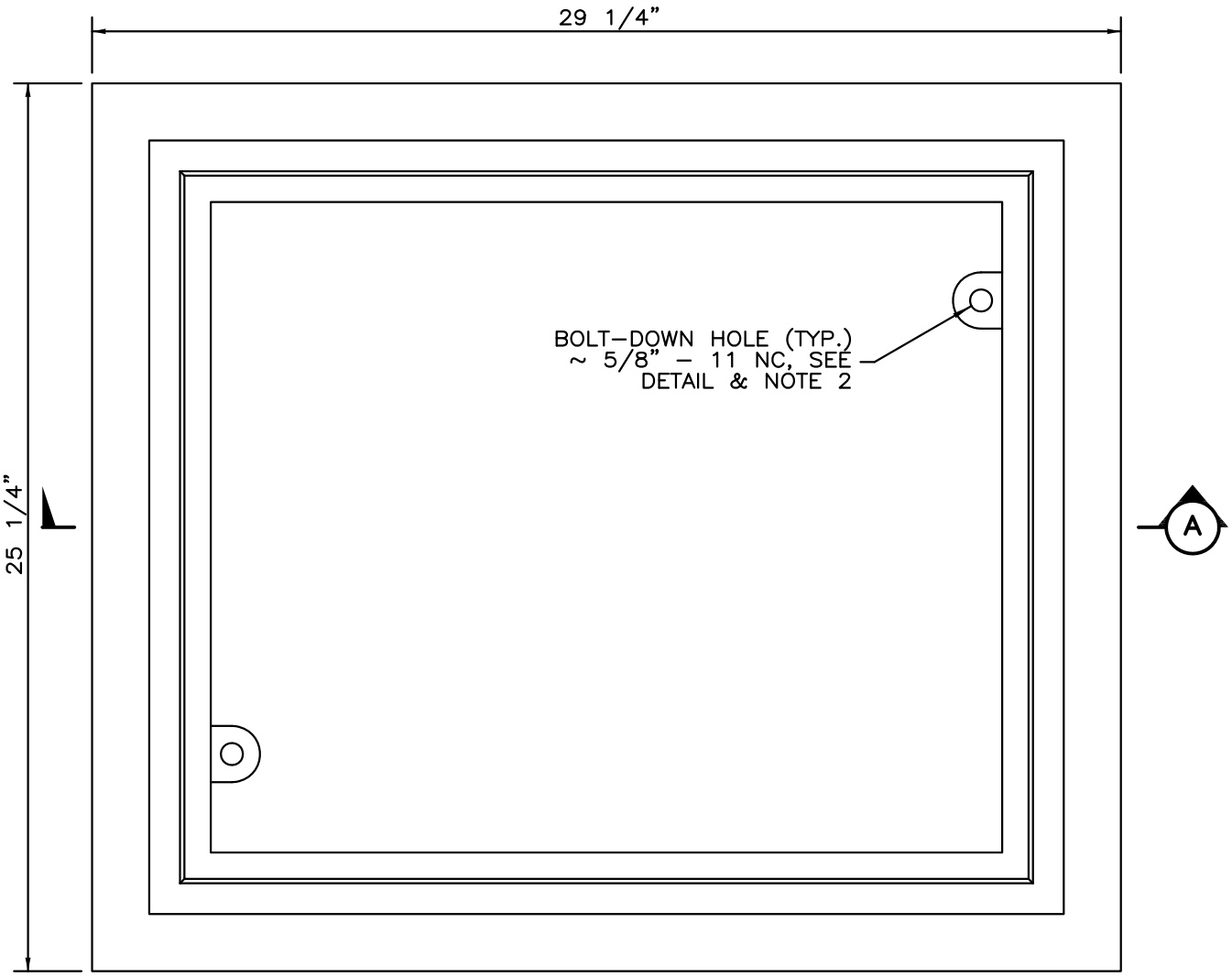

TOP

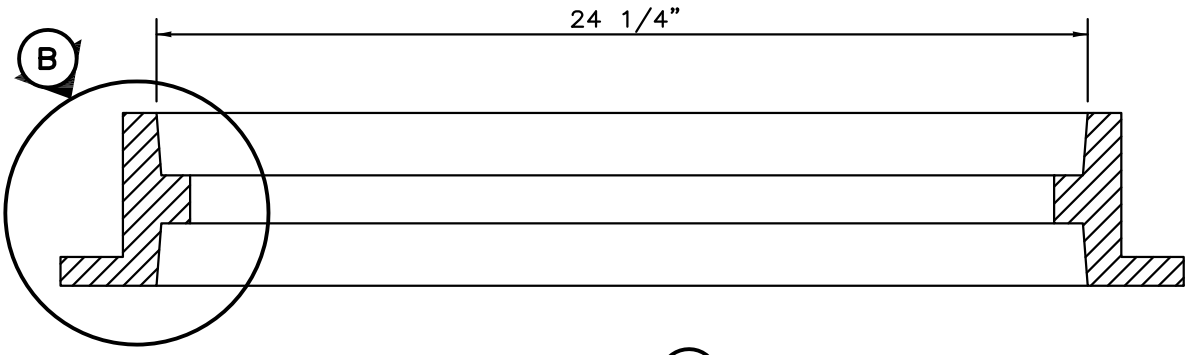

SECTION A

WSDOT STD PLAN B-30.10
ACCEPTABLE SUBSTITUTE

CITY OF EVERETT
PUBLIC WORKS DEPARTMENT

RECTANGULAR FRAME
FOR GRATE OR SOLID COVER
(REVERSIBLE) SHEET 1 OF 2

12-03-2010
Date:

405
COE Std Dwg:

T:\ACad\eps-coe design & constr specs for development\CURRENT\std detail dwgs\Dwg Files\STD405.dwg, 2/21/2014 10:48:28 AM

NOTES

1. THIS FRAME IS DESIGNED TO ACCOMMODATE 20" X 24" GRATES OR COVERS AS SHOWN ON COE STANDARD PLANS 406A, 406B AND 406C.

2. WHEN BOLT-DOWN GRATES OR COVERS ARE SPECIFIED IN THE CONTRACT, PROVIDE TWO HOLES IN THE FRAME THAT ARE VERTICALLY ALIGNED WITH THE GRATE OR COVER SLOTS. TAP EACH HOLE TO ACCEPT A 5/8" - 11 NC X 2" ALLEN HEAD CAP SCREW. LOCATION OF BOLT DOWN HOLES VARIES AMONG DIFFERENT MANUFACTURERS.

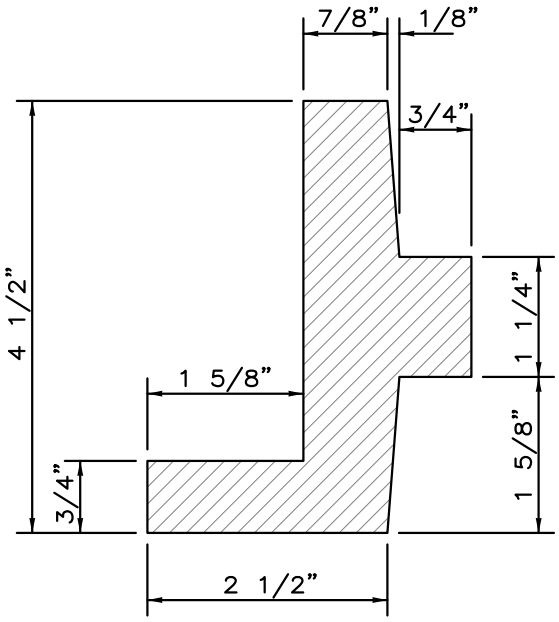

DETAIL (B)

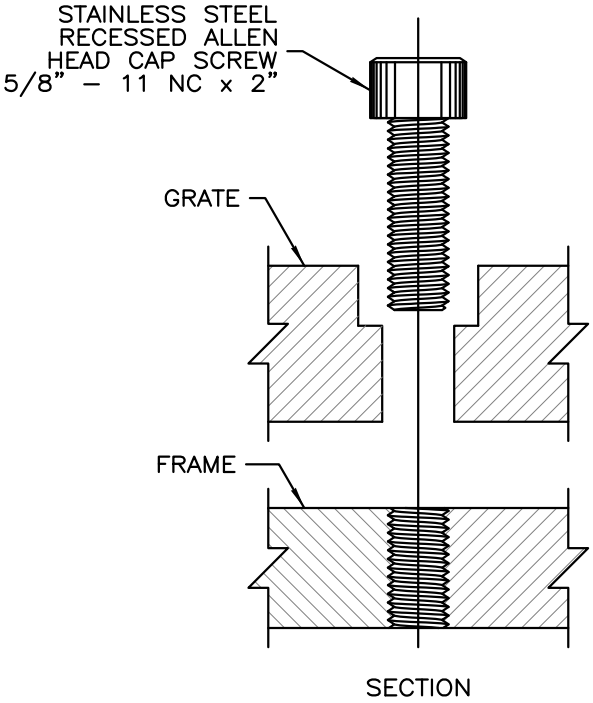

BOLT-DOWN DETAIL
SEE NOTE 2

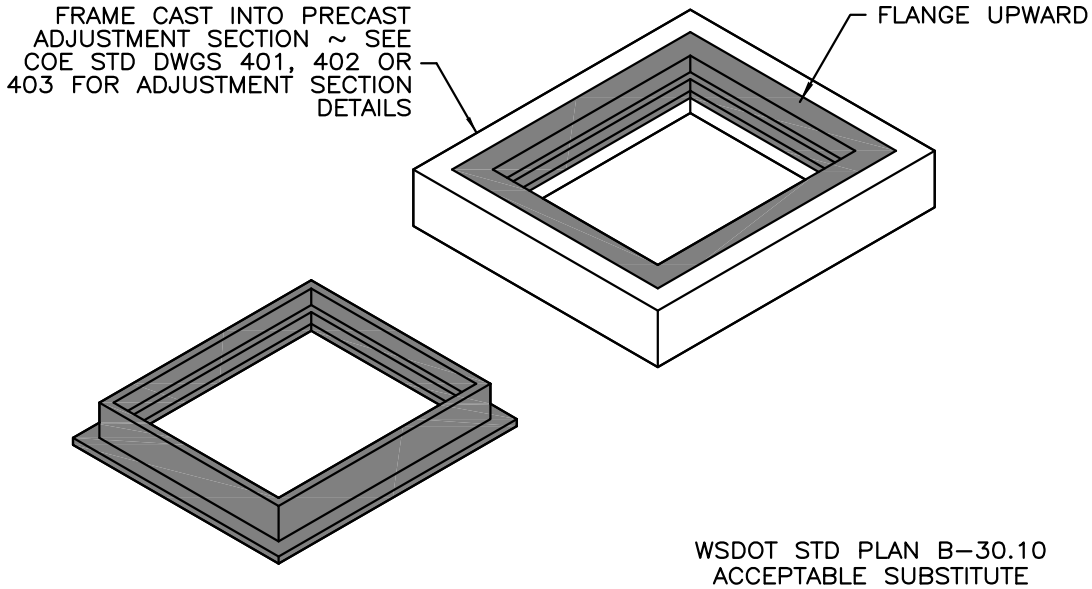

WSDOT STD PLAN B-30.10
ACCEPTABLE SUBSTITUTE

CITY OF EVERETT
PUBLIC WORKS DEPARTMENT

RECTANGULAR FRAME
FOR GRATE OR SOLID COVER
(REVERSIBLE) SHEET 2 OF 2

12-03-2010
Date:

405
COE Std Dwg:

T:\ACad\eps-coe design & constr specs for development\CURRENT\std detail dwgs\Dwg Files\STD405.dwg, 2/21/2014 10:48:46 AM

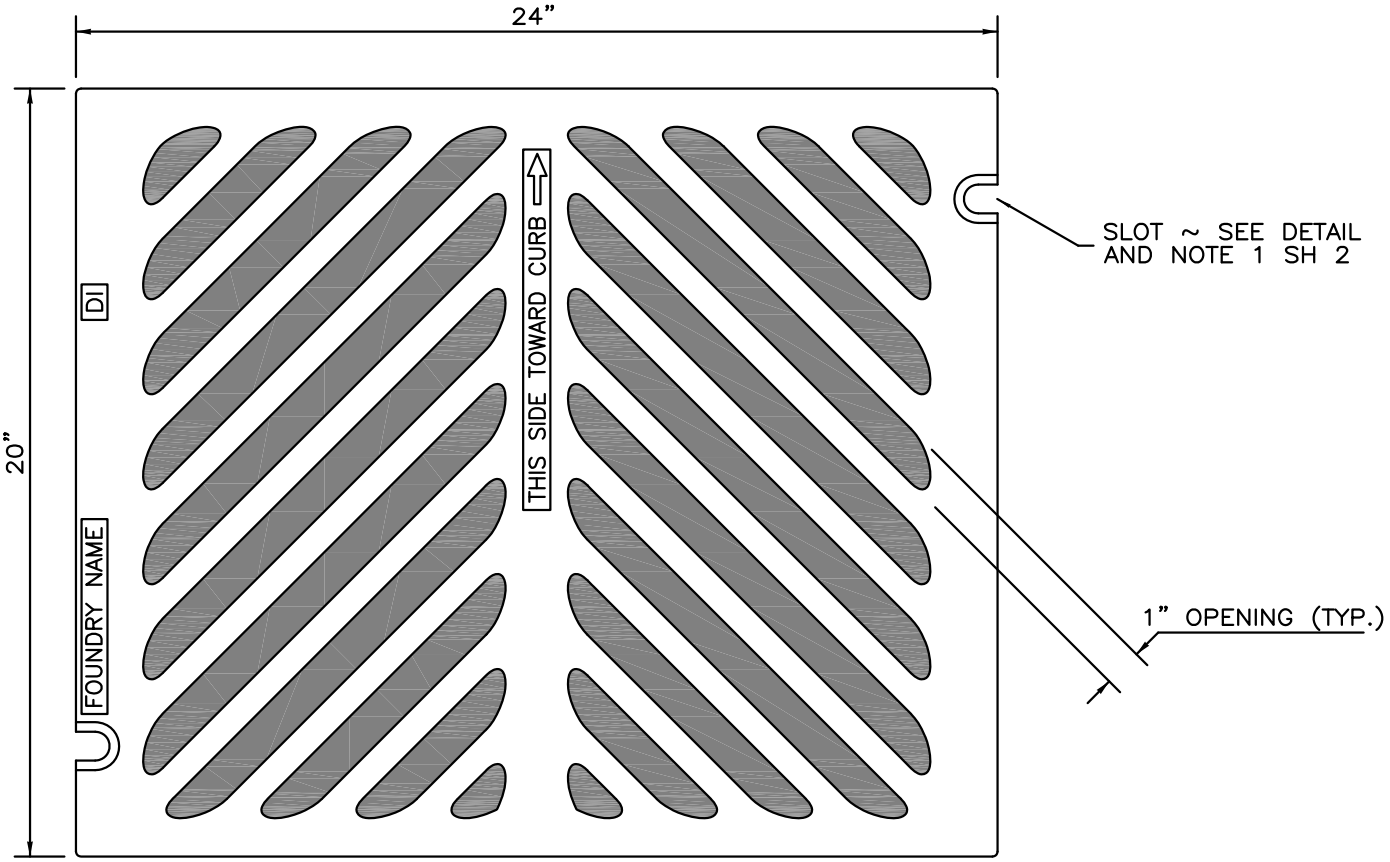

TOP

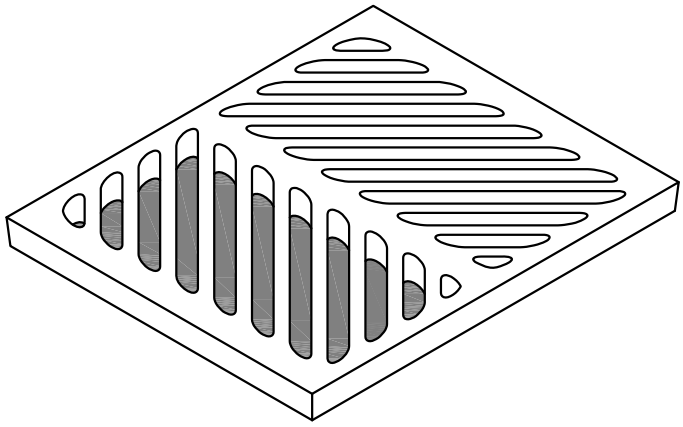

ISOMETRIC

WSDOT STD PLAN B-30.50
ACCEPTABLE SUBSTITUTE

CITY OF EVERETT
PUBLIC WORKS DEPARTMENT

HERRINGBONE GRATE
FOR CATCH BASIN OR INLET
SHEET 1 OF 2

12-03-2010
Date:

406A
COE Std Dwg:

T:\ACad\eps-coe design & constr specs for development\CURRENT\std detail dwgs\Dwg Files\STD406A.dwg, 2/21/2014 10:49:39 AM

NOTES

1. WHEN BOLT–DOWN GRATES ARE SPECIFIED, PROVIDE TWO SLOTS IN THE GRATE THAT ARE VERTICALLY ALIGNED WITH THE HOLES IN THE FRAME. LOCATION OF BOLT–DOWN SLOTS VARIES AMONG DIFFERENT MANUFACTURERS.
2. REFER TO COE DESIGN AND CONSTRUCTION STANDARDS AND SPECIFICATION SECTION 4 FOR ADDITIONAL REQUIREMENTS.
3. FOR FRAME DETAILS, SEE COE STANDARD PLAN 405.
4. THE THICKNESS OF THE GRATE SHALL NOT EXCEED 1 5/8".

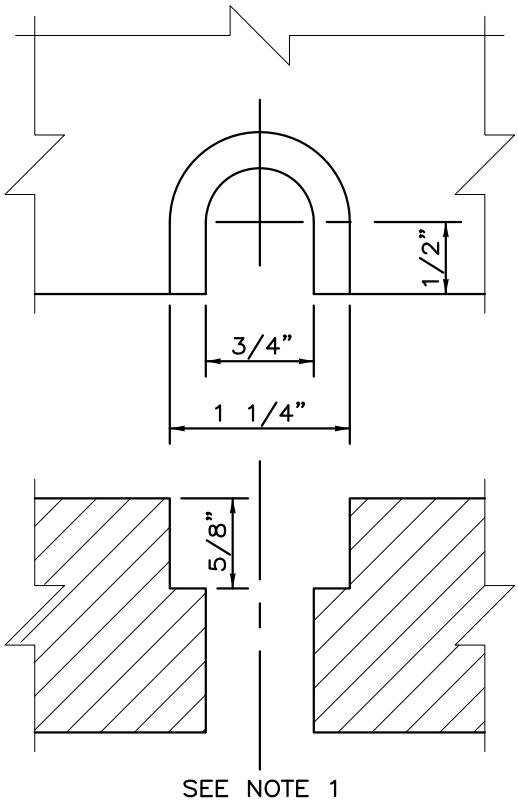

BOLT–DOWN SLOT DETAIL

WSDOT STD PLAN B–30.50
ACCEPTABLE SUBSTITUTE

CITY OF EVERETT
PUBLIC WORKS DEPARTMENT

HERRINGBONE GRATE
FOR CATCH BASIN OR INLET
SHEET 2 OF 2

12-03-2010
Date:

406A
COE Std Dwg:

T:\ACad\eps-coe design & constr specs for development\CURRENT\std detail dwgs\Dwg Files\STD406A.dwg, 2/21/2014 10:50:10 AM

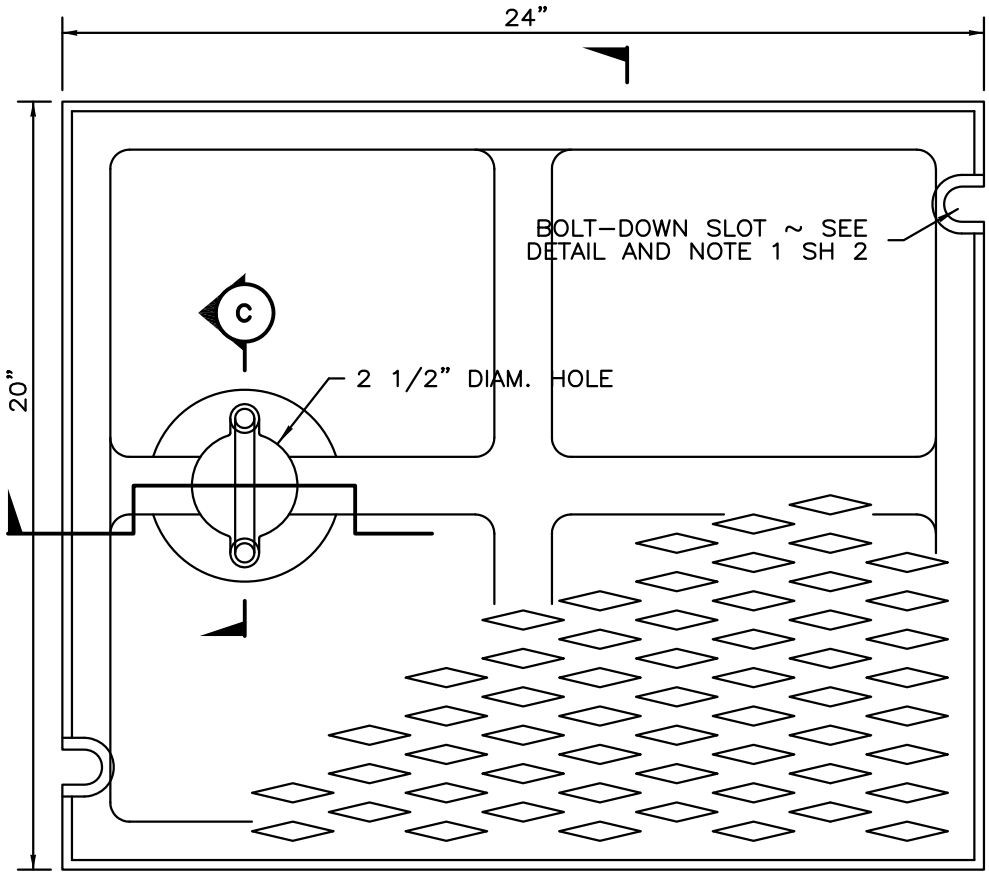

TOP

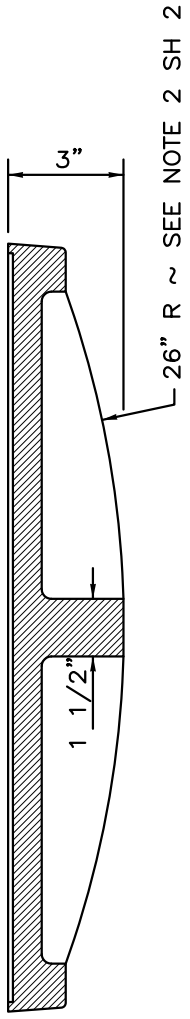

SECTION B

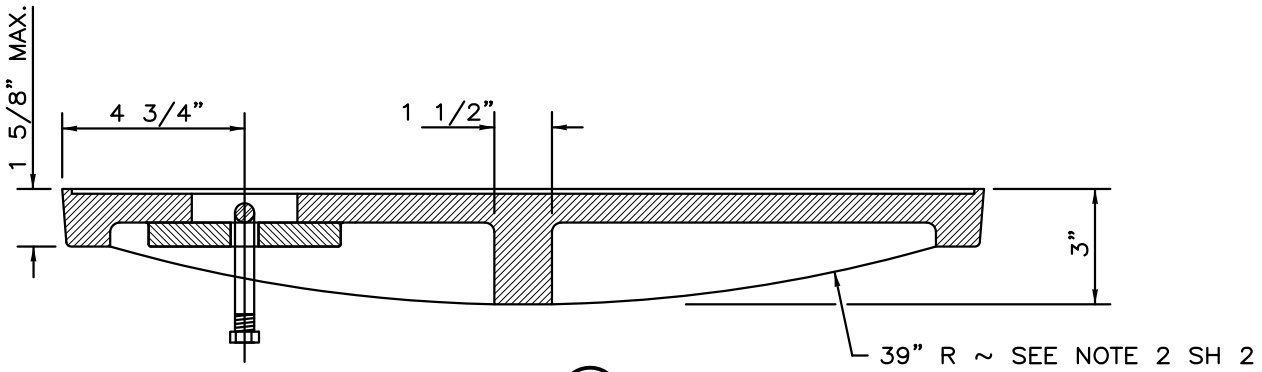

SECTION A

WSDOT STD PLAN
B-30.20-01ACCEPTABLE SUBSTITUTE

CITY OF EVERETT
PUBLIC WORKS DEPARTMENT

SOLID COVER
FOR CATCH BASIN OR INLET
SHEET 1 OF 2

12-03-2010
Date:

406B
COE Std Dwg:

T:\ACad\eps-coe design & constr specs for development\CURRENT\std detail dwgs\Dwg Files\STD406B.dwg, 2/21/2014 10:51:02 AM

NOTES

1. WHEN BOLT–DOWN COVERS ARE SPECIFIED, PROVIDE TWO SLOTS IN THE COVER THAT ARE VERTICALLY ALIGNED WITH THE HOLES IN THE FRAME. LOCATION OF BOLT–DOWN SLOTS VARIES AMONG DIFFERENT MANUFACTURERS.
2. ALTERNATIVE REINFORCING DESIGNS ARE ACCEPTABLE IN LIEU OF THE RIB DESIGN.
3. REFER TO COE DESIGN AND CONSTRUCTION STANDARD SPECIFICATIONS SECTION 4 FOR ADDITIONAL REQUIREMENTS.
4. FOR FRAME DETAILS, SEE COE STANDARD DWG 405.

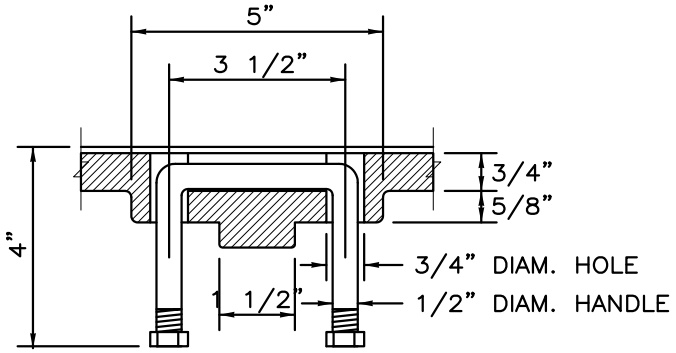

SECTION C

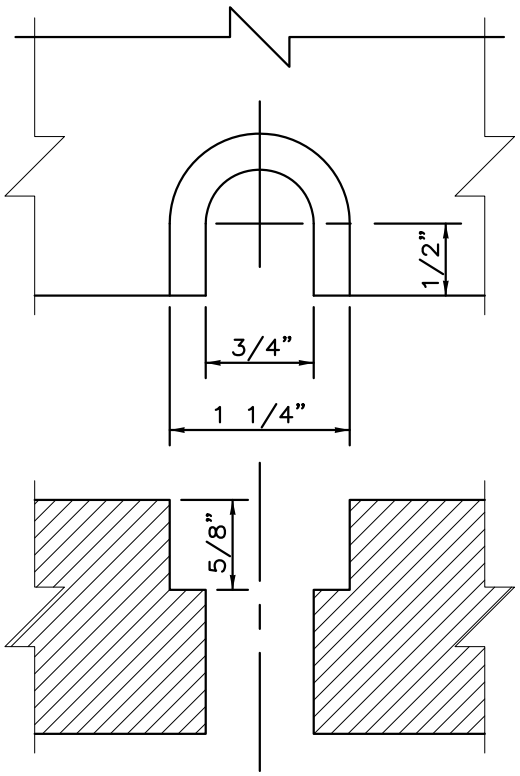

BOLT–DOWN SLOT DETAIL
SEE NOTE 1

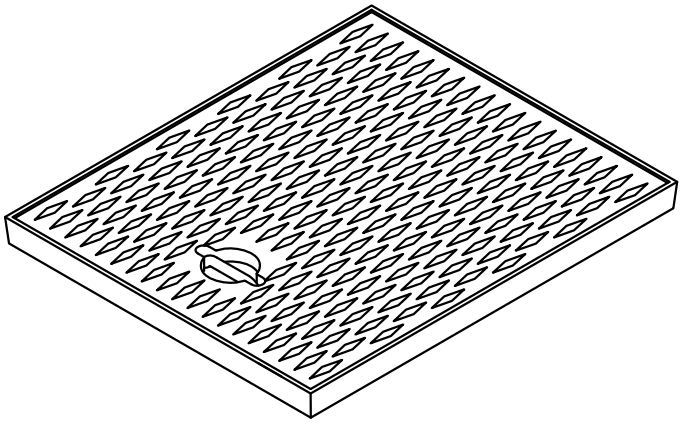

ISOMETRIC

WSDOT STD PLAN B–30.20–01
ACCEPTABLE SUBSTITUTE

CITY OF EVERETT
PUBLIC WORKS DEPARTMENT

SOLID COVER
FOR CATCH BASIN OR INLET
SHEET 2 OF 2

12-03-2010
Date:

406B
COE Std Dwg:

T:\ACad\eps-coe design & constr specs for development\CURRENT\std detail dwgs\Dwg Files\STD406B.dwg, 2/21/2014 10:51:26 AM

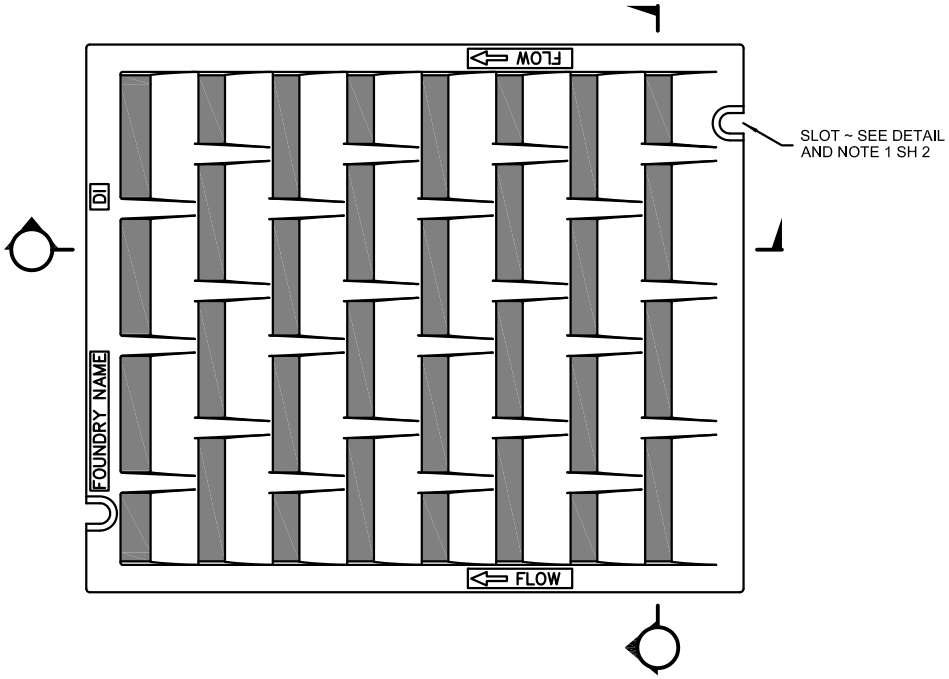

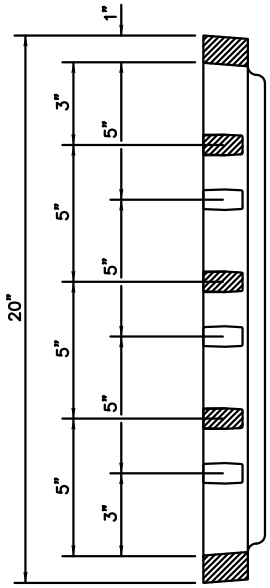

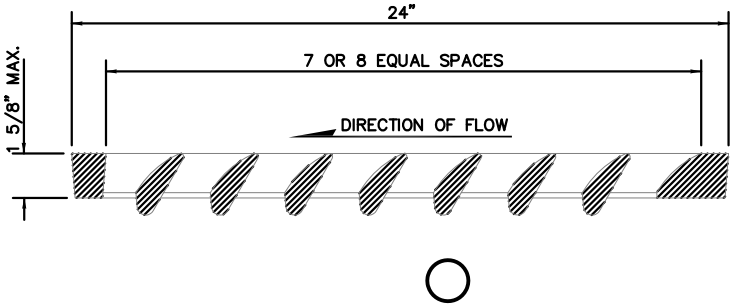

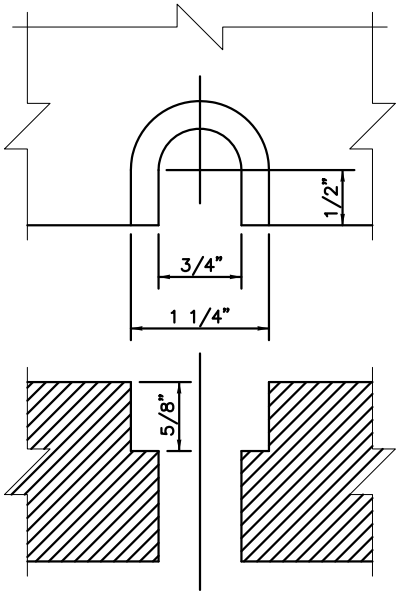

SEE NOTE 1

1. WHEN BOLT–DOWN GRATES ARE SPECIFIED, PROVIDE TWO SLOTS IN THE GRATE THAT ARE VERTICALLY ALIGNED WITH THE HOLES IN THE FRAME. LOCATION OF BOLT–DOWN SLOTS VARIES AMONG DIFFERENT MANUFACTURERS.
2. REFER TO COE DESIGN AND CONSTRUCTION STANDARDS SPECIFICATIONS SECTION 4 FOR ADDITIONAL REQUIREMENTS.
3. FOR FRAME DETAILS, SEE COE STANDARD DWG 405.

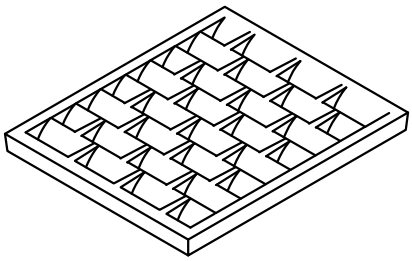

WSDOT STD PLAN B–30.30
ACCEPTABLE SUBSTITUTE

CITY OF EVERETT
PUBLIC WORKS DEPARTMENT

VANED GRATE FOR CATCH BASIN OR INLET

12-03-2010
Date:

406C
COE Std Dwg:

T:\ACad\eps-coe design & constr specs for development\CURRENT\std detail dwgs\Dwg Files\STD406C.dwg, 2/21/2014 10:52:19 AM

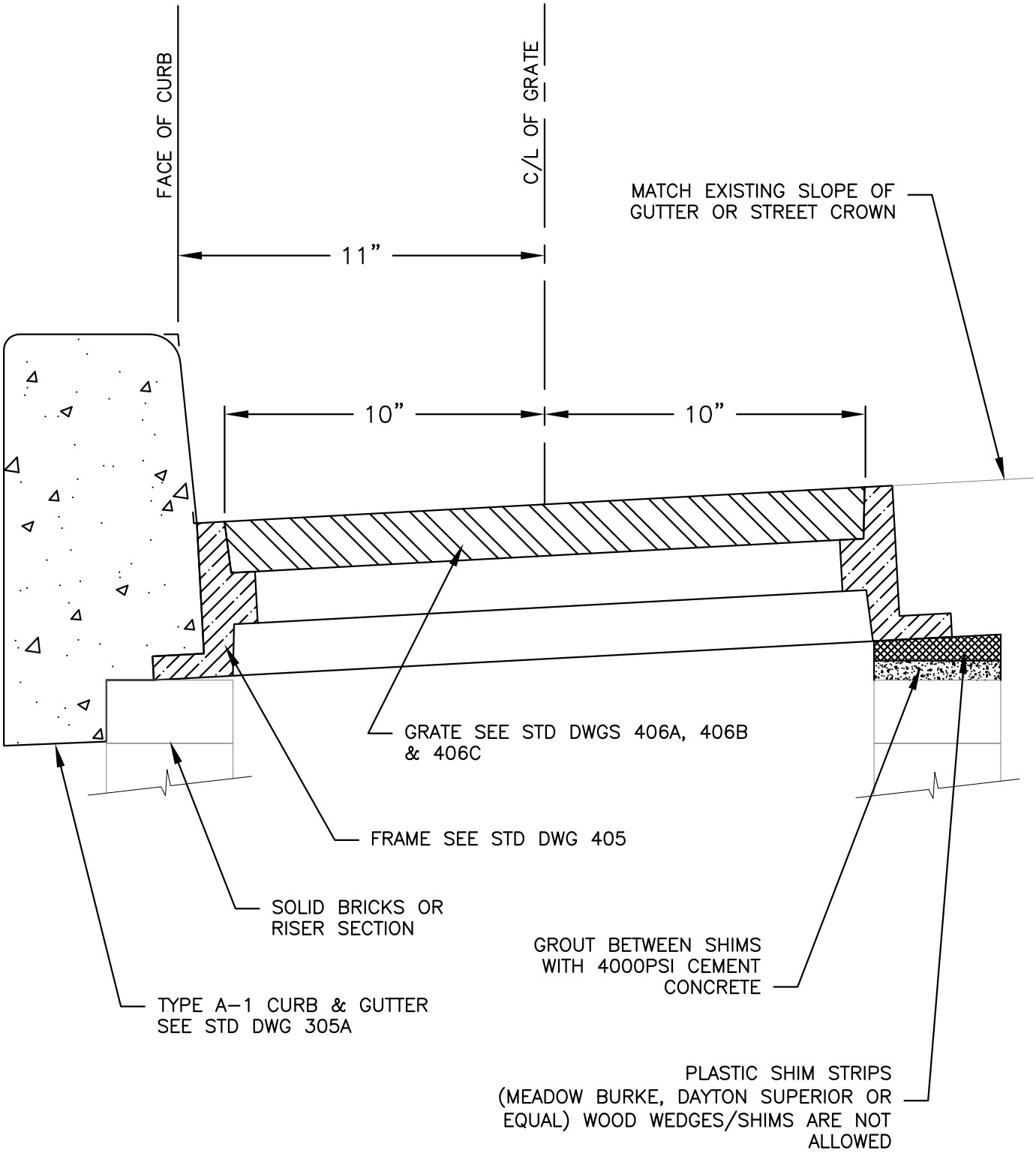

CITY OF EVERETT
PUBLIC WORKS DEPARTMENT

TYPICAL FRAME AND GRATE INSTALLATION

12-03-2010
Date:

407
COE Std Dwg:

T:\ACad\eps-coe design & constr specs for development\CURRENT\std detail dwgs\Dwg Files\STD407.dwg, 2/21/2014 10:53:17 AM

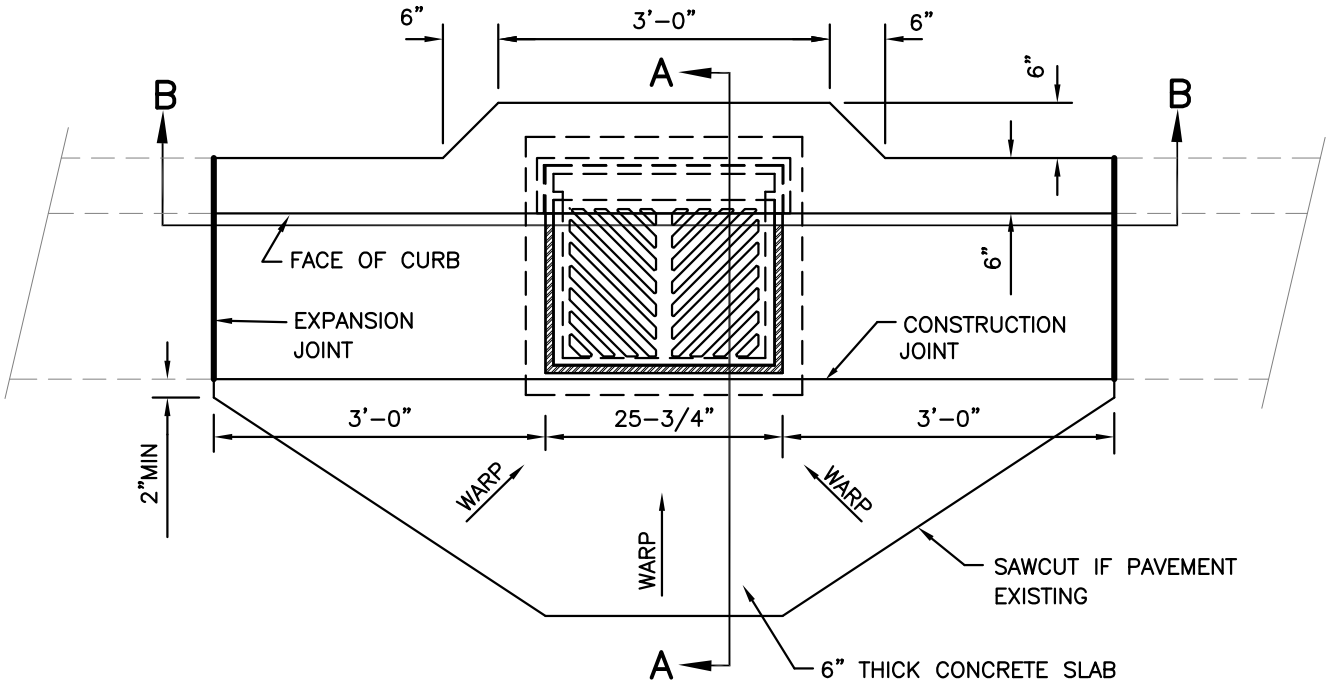

TOP VIEW

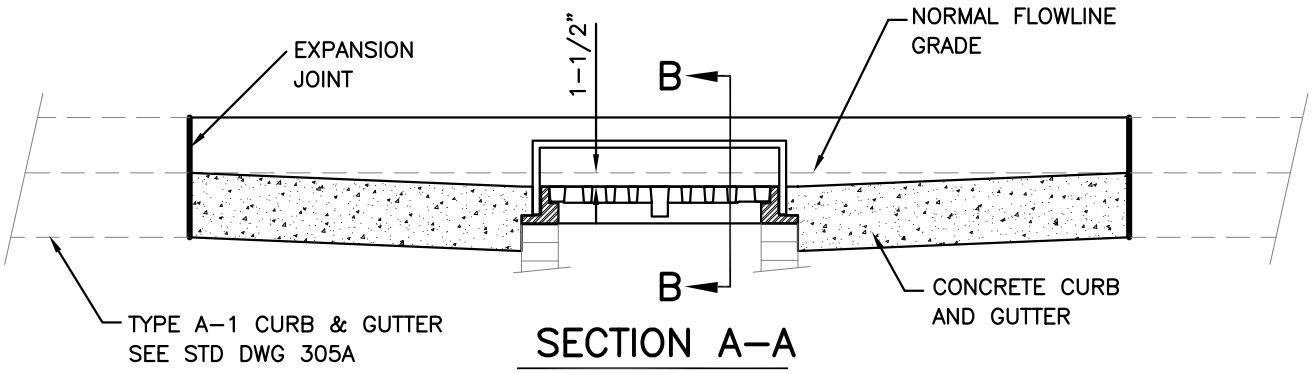

SECTION A–A

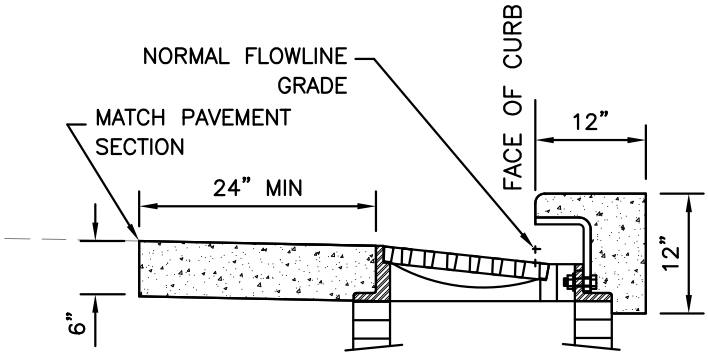

SECTION B–B

NOTES:

1. INSTALLATION OF OPEN CURB FACE FRAME AND GRATE MUST BE APPROVED BY CITY ENGINEER ON A CASE BY CASE BASIS.
2. SEE STD DWG'S 405 AND 409 FOR FRAME AND GRATE DETAILS.

CITY OF EVERETT PUBLIC WORKS DEPARTMENT	OPEN CURB FACE FRAME AND GRATE INSTALLATION	12-03-2010 Date: 408 COE Std Dwg:

T:\ACad\eps-coe design & constr specs for development\CURRENT\std detail dwgs\Dwg Files\STD408.dwg, 2/21/2014 10:54:10 AM

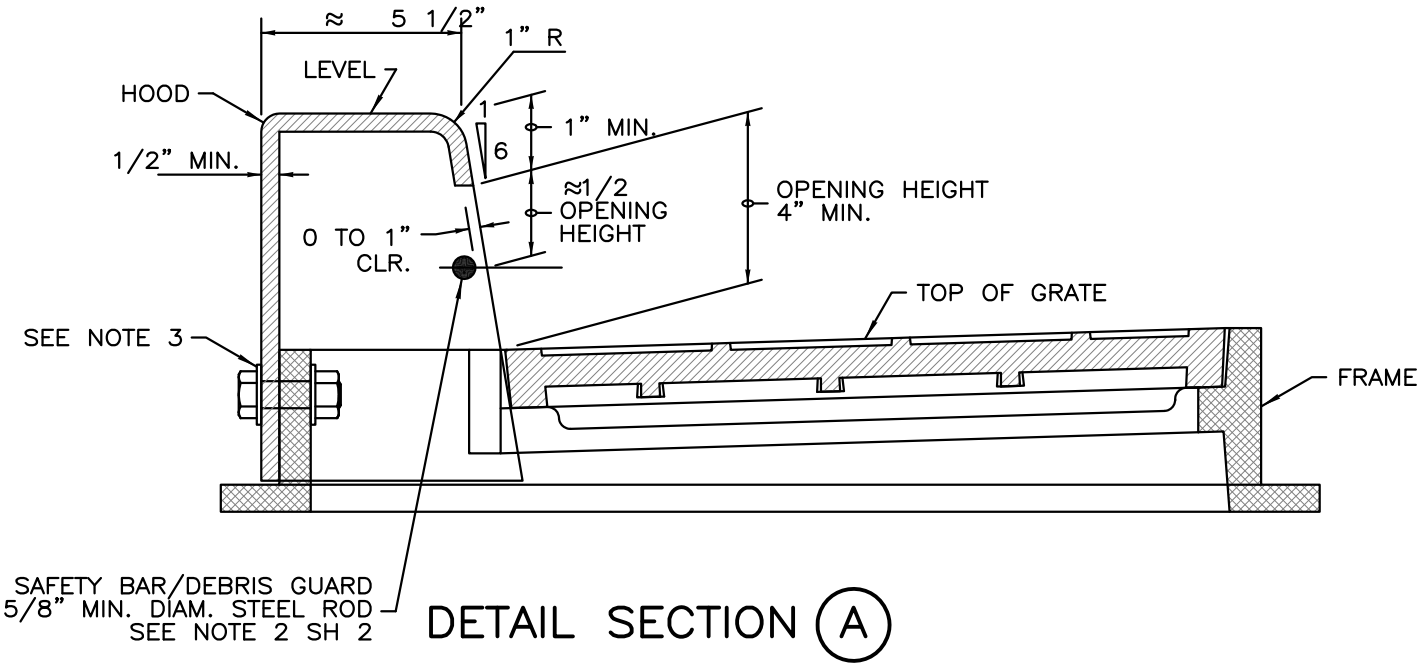

DETAIL SECTION (A)

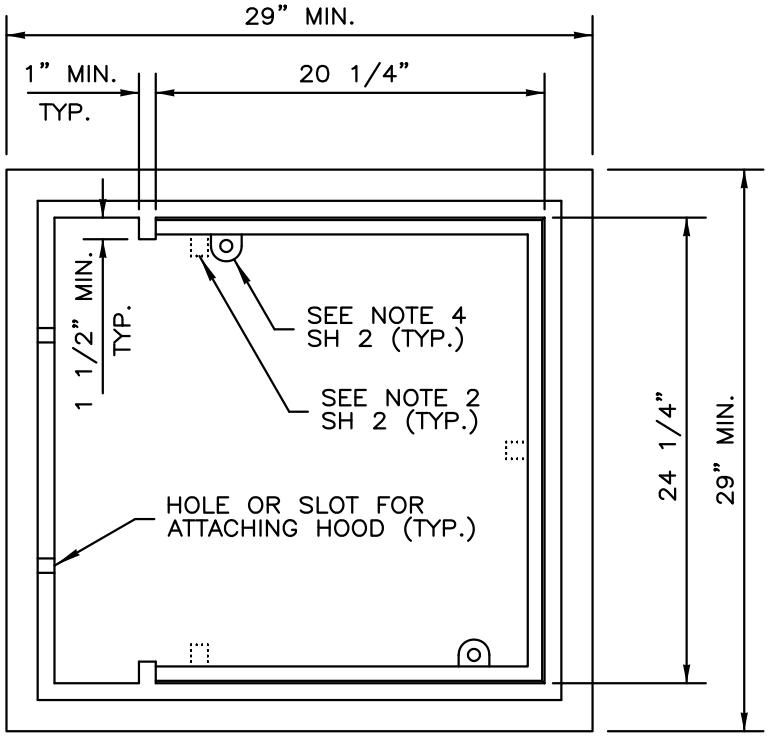

TOP VIEW
FRAME DETAIL

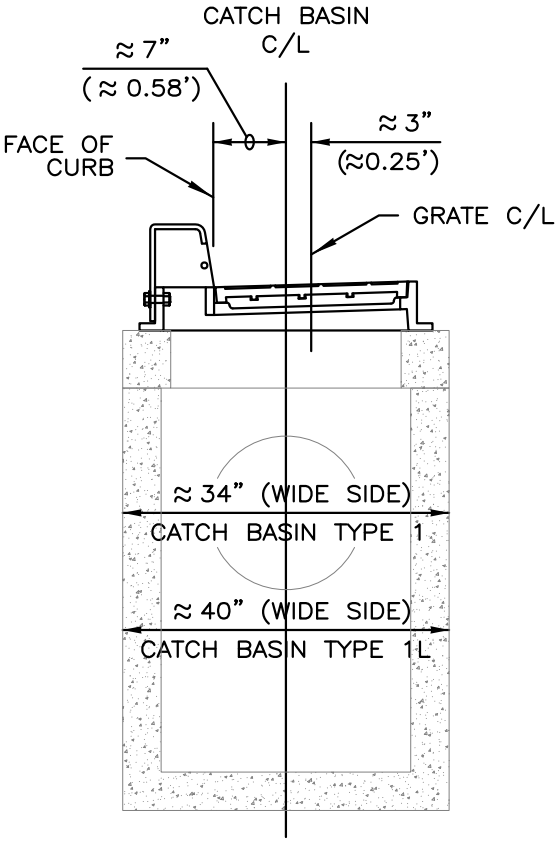

SEE NOTE 1 SH 2

SECTION (A)

WSDOT STD PLAN B-25.20
ACCEPTABLE SUBSTITUTE

CITY OF EVERETT
PUBLIC WORKS DEPARTMENT

OPEN CURB FACE FRAME
AND GRATE DETAILS
SHEET 1 OF 2

12-03-2010
Date:

409
COE Std Dwg:

T:\ACad\eps-coe design & constr specs for development\CURRENT\std detail dwgs\Dwg Files\STD409.dwg, 2/21/2014 10:55:01 AM

NOTES

1. THE ASYMMETRY OF THE COMBINATION INLET SHALL BE CONSIDERED WHEN CALCULATING THE OFFSET DISTANCE FOR THE CATCH BASIN. SEE SECTION A.

2. THE DIMENSIONS OF THE FRAME AND HOOD MAY VARY SLIGHTLY AMONG DIFFERENT MANUFACTURERS. THE FRAME MAY HAVE CAST FEATURES INTENDED TO SUPPORT A GRATE GUARD. HOOD UNITS SHALL MOUNT OUTSIDE OF THE FRAME. THE METHODS FOR FASTENING THE SAFETY BAR / DEBRIS GUARD ROD TO THE HOOD MAY VARY. THE TOP OF THE HOOD MAY BE CAST WITH A PATTERN.

3. ATTACH THE HOOD TO THE FRAME WITH TWO 3/4" × 2" HEX HEAD BOLTS, NUTS, AND OVERSIZE WASHERS. THE WASHERS SHALL HAVE DIAMETERS ADEQUATE TO ASSURE FULL BEARING ACROSS THE SLOTS.

4. WHEN BOLT–DOWN GRATES ARE SPECIFIED IN THE CONTRACT, PROVIDE TWO HOLES IN THE FRAME THAT ARE VERTICALLY ALIGNED WITH THE GRATE SLOTS. TAP EACH HOLE TO ACCEPT A 5/8" × – 11 NC × 2" STAINLESS STEEL ALLEN HEAD CAP SCREW. LOCATION OF BOLT–DOWN HOLES VARIES AMONG DIFFERENT MANUFACTURERS. SEE COE BOLT–DOWN DETAIL, COE STANDARD PLAN 405.

5. ONLY DUCTILE IRON VANED GRATES SHALL BE USED SEE COE STD DWG 406C FOR GRATE DETAILS. REFER TO WSDOT STANDARDS SPECIFICATION SECTION 4 FOR ADDITIONAL REQUIREMENTS.

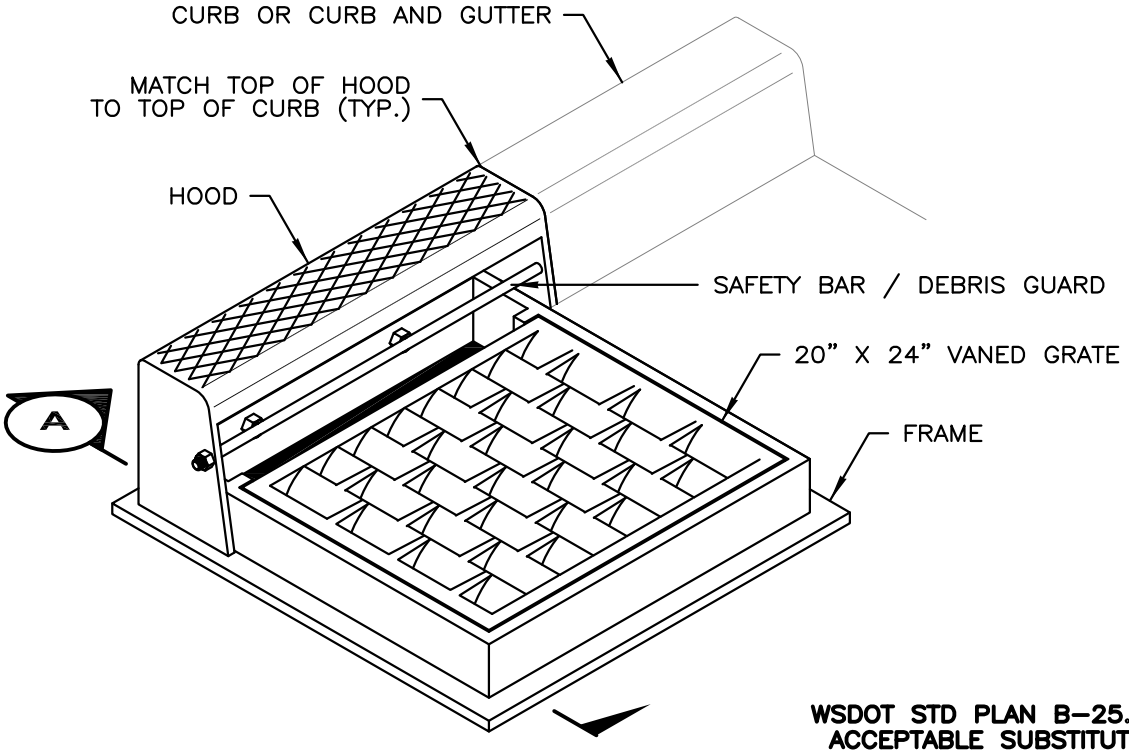

WSDOT STD PLAN B–25.20 ACCEPTABLE SUBSTITUTE

CITY OF EVERETT
PUBLIC WORKS DEPARTMENT

OPEN CURB FACE FRAME AND GRATE DETAILS
SHEET 2 OF 2

12-03-2010
Date:

409
COE Std Dwg:

T:\ACad\eps-coe design & constr specs for development\CURRENT\std detail dwgs\Dwg Files\STD409.dwg, 2/21/2014 10:55:23 AM

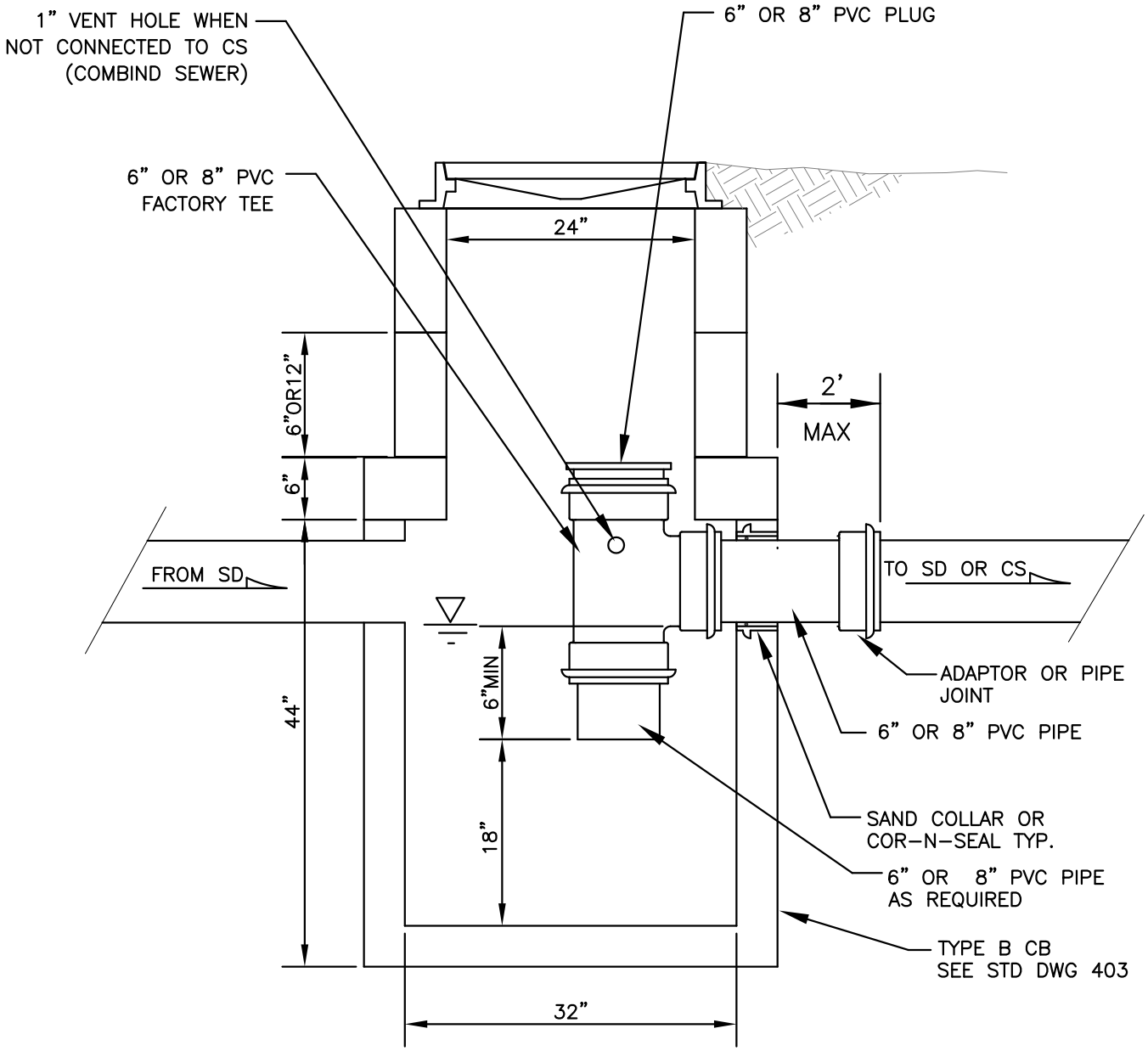

CITY OF EVERETT
PUBLIC WORKS DEPARTMENT

FLOATABLE MATERIAL SEPARATOR & GAS TRAP
FOR 6" OR 8" LINES

12-03-2010
Date:

410
COE Std Dwg:

T:\ACad\eps-coe design & constr specs for development\CURRENT\std detail dwgs\Dwg Files\STD410.dwg, 2/21/2014 10:57:29 AM

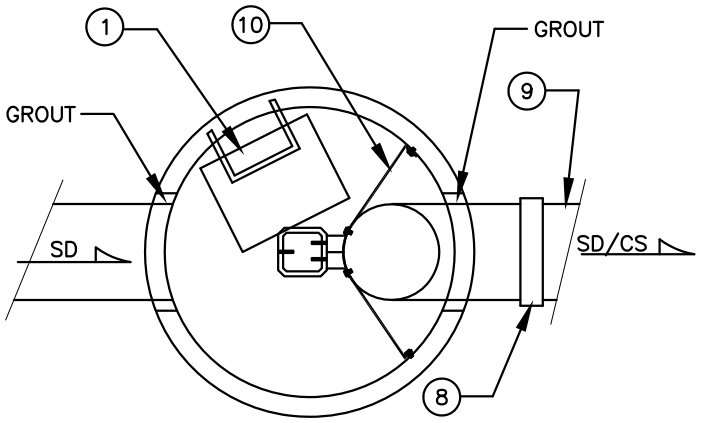

PLAN

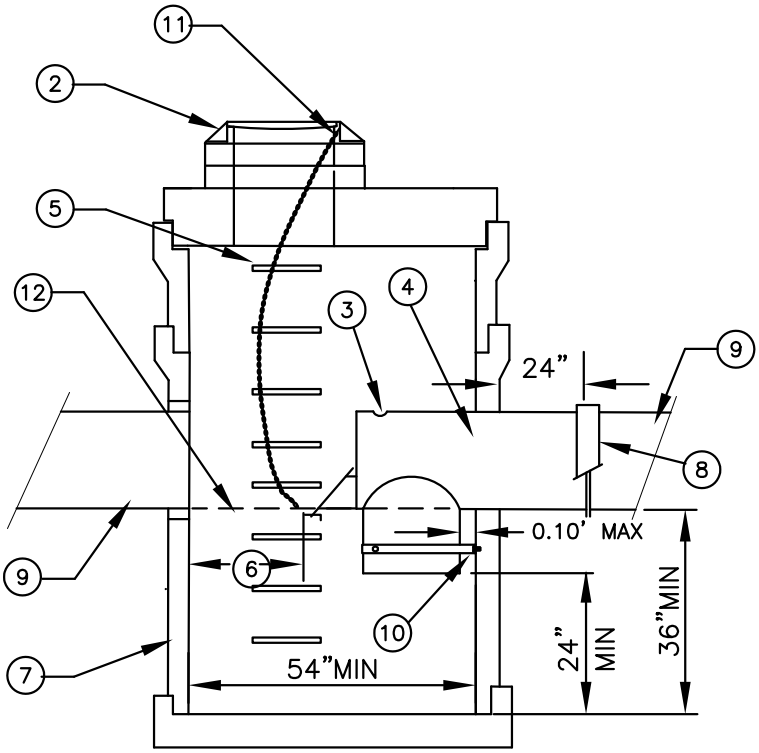

ELEVATION

NOTES:

1. INSTALL CB TOP, FRAME, GRATE AND SECTIONS SO THAT LIFT GATE IS VISIBLE THROUGH OPENING AND STEPS CLEAR INLET AND RESTRICTOR UNIT.
2. INSTALL LOCKING FRAME & GRATE OR LID PER STD DWG 405 OR 607. FRAME AND LID PER STD DWG 607 IS REQUIRED IF INSTALLATION IS NOT IN PAVED AREA OR IS NOT TO FUNCTION AS A CB.
3. 1" VENT HOLE WHEN NOT CONNECTED TO COMBINED SEWER SYSTEM.
4. SEPARATOR ASSEMBLY SEE STD DWG 412B & 412C AS APPLICABLE.
5. STEPS PER STD DWG 606.
6. MIN CLEARANCE: 36"FOR OUTLETS OF 24" AND LARGER 18" FOR OUTLETS OF 18" AND SMALLER
7. 54" TYPE 2 CB OR LARGER.
8. BAND STRAP WITH GASKET
9. SEE PLAN AND SPECIFICATIONS FOR SIZE AND TYPE OF PIPE ENTERING AND EXITING CB.
10. SECURE SEPARATOR TO CB WITH 8 GA ALUMINUM STRAP. BOLT TO CB WALL WITH STAINLESS STEEL ANCHOR BOLTS AND TO SEPARATOR UNIT.
11. BOLT CHAIN TO FRAME.
12. INVERT ELEVATION: SEE PLANS AND SPECIFICATIONS.

CITY OF EVERETT PUBLIC WORKS DEPARTMENT	FLOATABLE MATERIAL SEPARATOR AND/OR GAS TRAP FOR 12" AND LARGER LINES	12-03-2010 Date: 411 COE Std Dwg:

T:\ACad\eps-coe design & constr specs for development\CURRENT\std detail dwgs\Dwg Files\STD411.dwg, 2/21/2014 10:58:21 AM

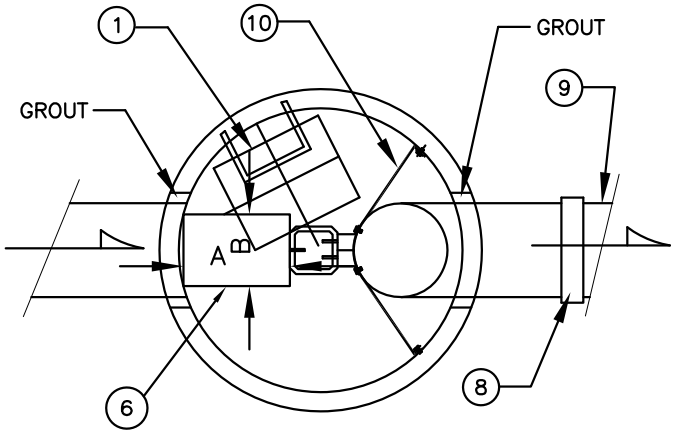

PLAN

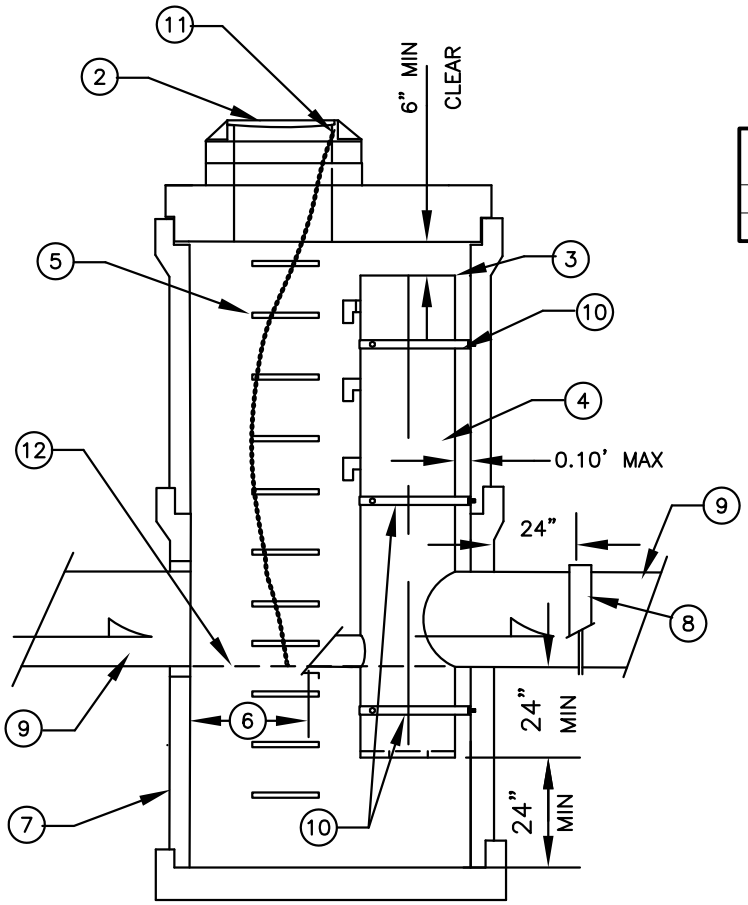

ELEVATION

NOTES:

1. INSTALL CB TOP, FRAME, GRATE AND SECTIONS SO THAT LIFT GATE IS VISIBLE THROUGH OPENING AND STEPS CLEAR INLET AND RESTRICTOR UNIT.
2. INSTALL LOCKING FRAME & GRATE OR LID PER STD DWG 405 OR 607. FRAME AND LID PER STD DWG 607 IS REQUIRED IF INSTALLATION IS NOT IN PAVED AREA OR IS NOT TO FUNCTION AS A CB.
3. OVERFLOW ELEVATION PER PLANS.
4. RESTRICTOR ASSEMBLY SEE STD DWG 412B & 412C.
5. STEPS PER STD DWG 606.
6. MIN CLEARANCE:
   36"FOR OUTLETS OF 24" AND LARGER 18" FOR OUTLETS OF 18" AND SMALLER
6. MAINTENANCE CLEAR ZONE:
   THIS AREA IS REQUIRED FOR CLEANING AND WILL BE FREE OF OBSTRUCTIONS FROM GATE TO TOP OF STRUCTURE.

DIM	OUTLET SIZE	
	18" AND SMALLER	24" AND LARGER
A	18"	36"
B	18"	24"

7. 54" TYPE 2 CB OR LARGER.
8. BAND STRAP WITH GASKET.
9. SEE PLAN AND SPECIFICATIONS FOR SIZE AND TYPE OF PIPE ENTERING AND EXITING CB.
10. SECURE RESTRICTOR TO CB WITH 8 GA ALUMINUM STRAPS BOLT TO CB WALLAND RESTRICTOR WITH STAINLESS STEEL ANCHOR BOLTS. ONE STRAP ABOVE AND BELOW OUTLET REQUIRED, INTERMEDIATE STRAPS REQUIRED FOR RESTRICTOR RISERS GREATER THAN 12' ABOVE OUTLET.
11. BOLT OR WELD CHAIN TO FRAME.
12. INVERT ELEVATION: SEE PLANS AND SPECIFICATIONS.

CITY OF EVERETT
PUBLIC WORKS DEPARTMENT

TYPICAL RESTRICTOR INSTALLATION

12-03-2010
Date:

412A
COE Std Dwg:

T:\ACad\eps-coe design & constr specs for development\CURRENT\std detail dwgs\Dwg Files\STD412A.dwg, 2/21/2014 11:05:30 AM

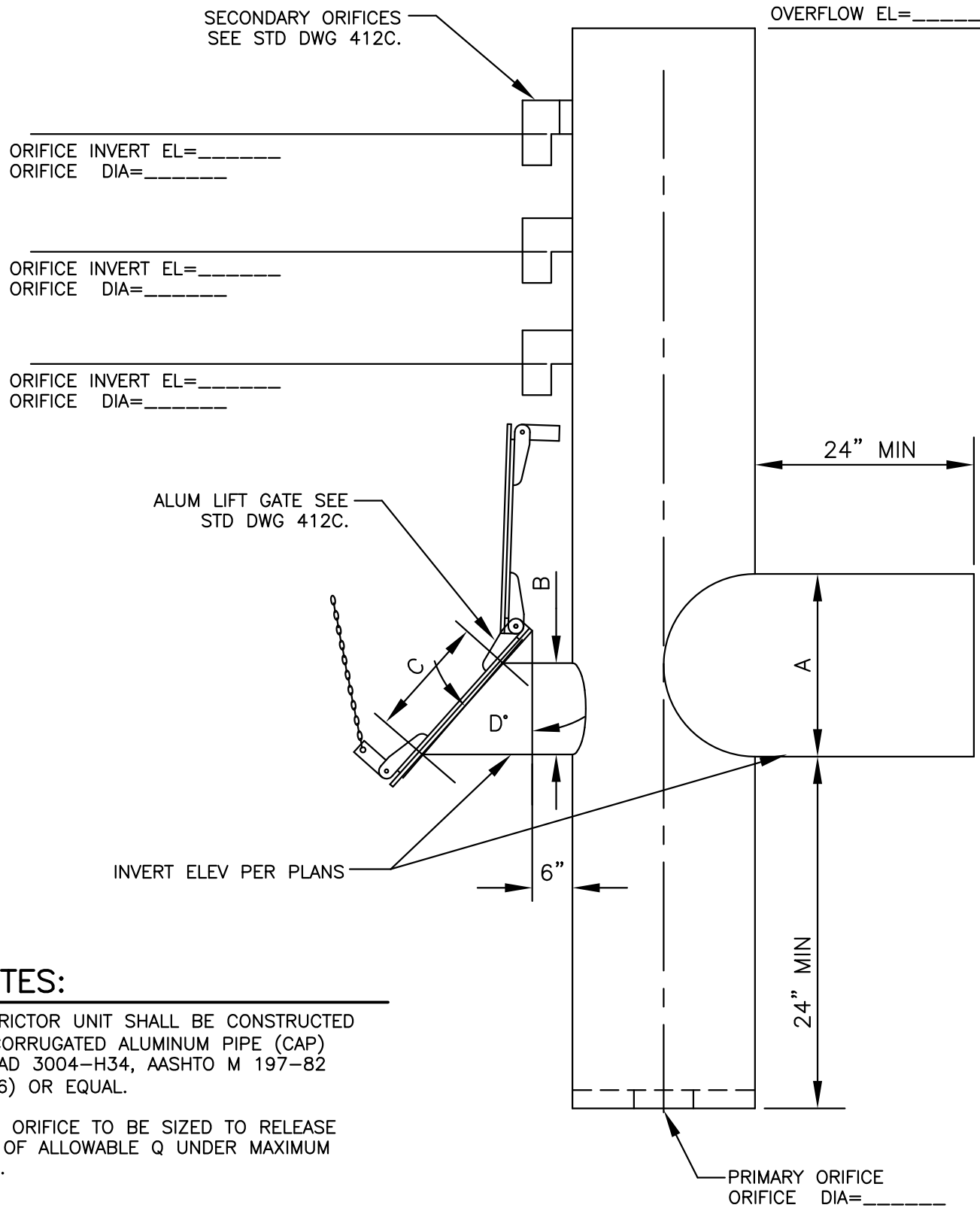

NOTES:

1 RESTRICTOR UNIT SHALL BE CONSTRUCTED OF CORRUGATED ALUMINUM PIPE (CAP) ALCLAD 3004–H34, AASHTO M 197–82 (1986) OR EQUAL.

2 EACH ORIFICE TO BE SIZED TO RELEASE 25% OF ALLOWABLE Q UNDER MAXIMUM HEAD.

ITEM	DESCRIPTION	SIZE	
A	OUTLET	18" AND SMALLER	24" AND LARGER
B	CLEAN OUT	6" ID	10" ID
C	GATE SIZE	8" OPENING	12" OPENING
D	ANGLE	42°±	34°±

CITY OF EVERETT
PUBLIC WORKS DEPARTMENT

TYPICAL RESTRICTOR ASSEMBLY

12-03-2010
Date:

412B
COE Std Dwg:

T:\ACad\eps-coe design & constr specs for development\CURRENT\std detail dwgs\Dwg Files\STD412B.dwg, 2/21/2014 11:06:13 AM

NOTES:

LIFT GATE SHALL BE CONSTRUCTED OF: 1/4" R-6061-T6 ALUM. W/CLOSED CELL NEOPRENE PER ASTM 1056-67 CHEMICAL RESISTANT (OIL & GREASE), OZONE RESISTANT, 67° TO +250° F SERVICE TEMP.

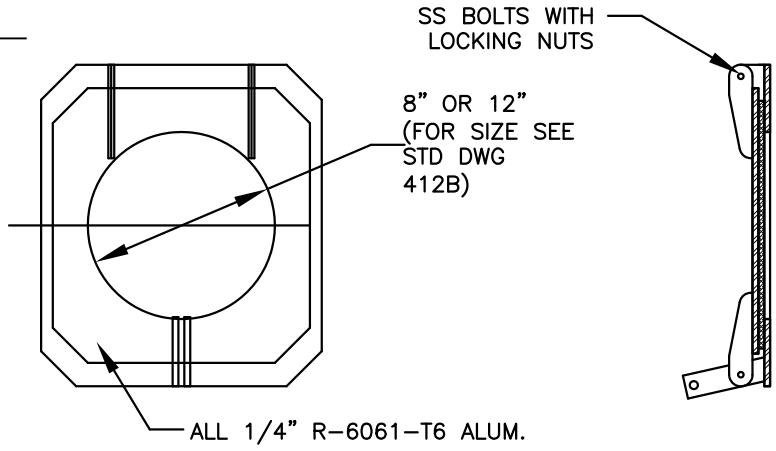

LIFT GATE DETAIL

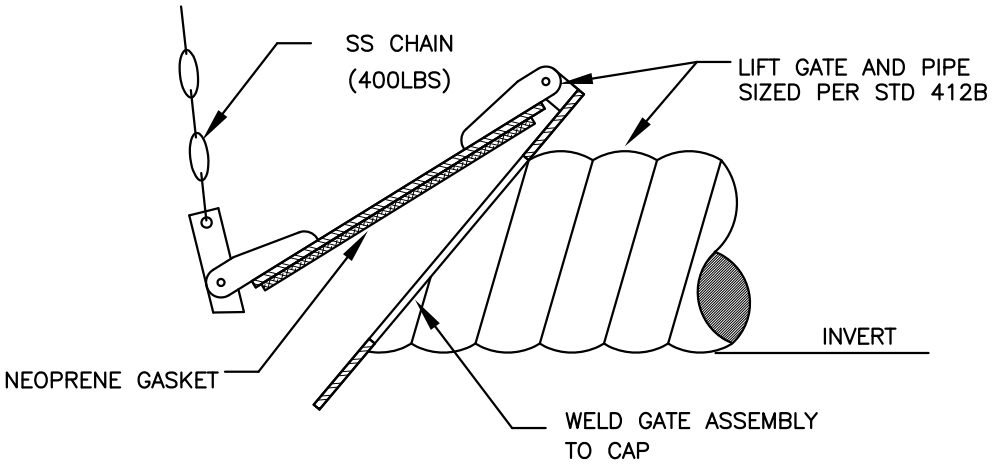

LIFT GATE ASSEMBLY

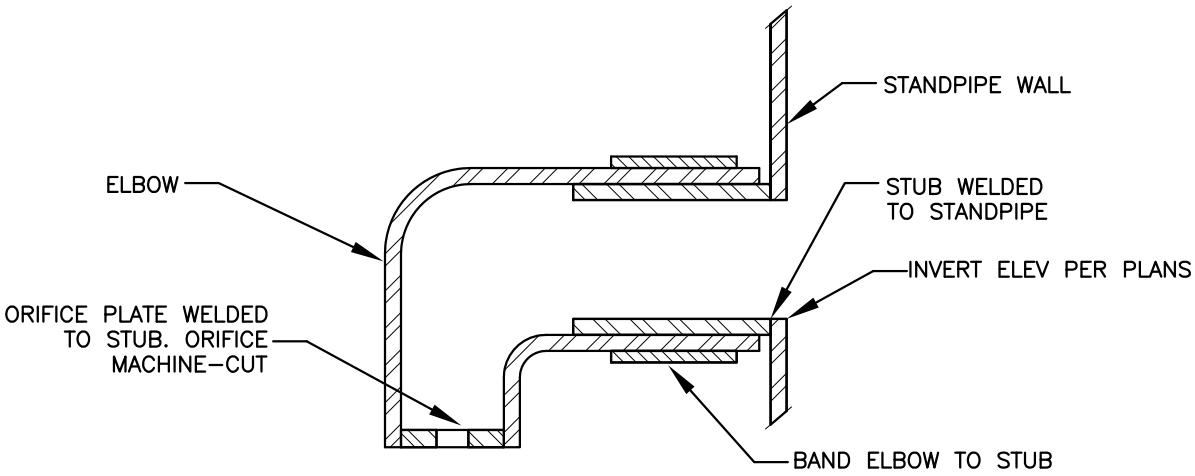

ALL PARTS TO BE R-6061-T6 ALUM

SECONDARY ORIFICE DETAIL

CITY OF EVERETT PUBLIC WORKS DEPARTMENT	LIFT GATE ASSEMBLY AND SECONDARY ORIFICE DETAIL	12-03-2010 Date: 412C COE Std Dwg:

T:\ACad\eps-coe design & constr specs for development\CURRENT\std detail dwgs\Dwg Files\STD412C.dwg, 2/21/2014 11:07:04 AM

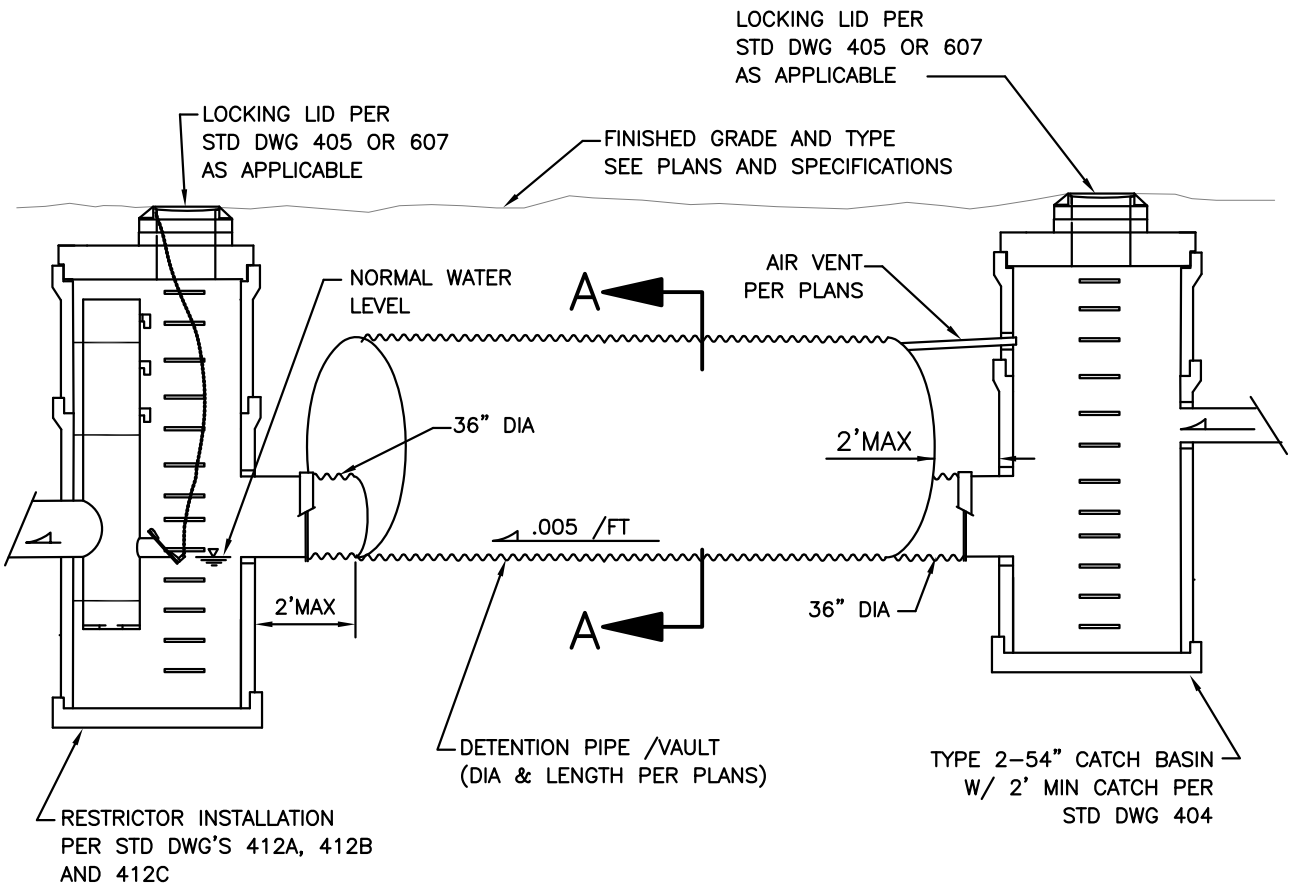

ELEVATION

NOTES:

1. DETENTION STRUCTURE SHALL BE FABRICATED FROM ONE OF THE FOLLOWING:

   A. CORRUGATED STEEL PIPE. 14 GAGE MIN, WITH TREATMENT #1. (NOT TO BE USED IN A CITY MAINTAINED SYSTEM).

   B. CORRUGATED ALUMINUM PIPE 12 GAGE MIN.

   C. HIGH DENSITY POLYETHYLENE PIPE.

   D. STRUCTURAL CONCRETE VAULTS DESIGNED BY LICENSED ENG.

2. ANNUAL INSPECTIONS AND CLEANING REQUIRED BY OWNER TO ENSURE PROPER OPERATION OF DETENTION SYSTEM.

3. W = MAXIMUM WIDTH OF TRENCH FOR PIPE/VAULT PER WISHA AND MFR INSTALATION INSTRUCTIONS.

4. COMPACT IN 8" LIFTS TO 90% MAX DENSITY.

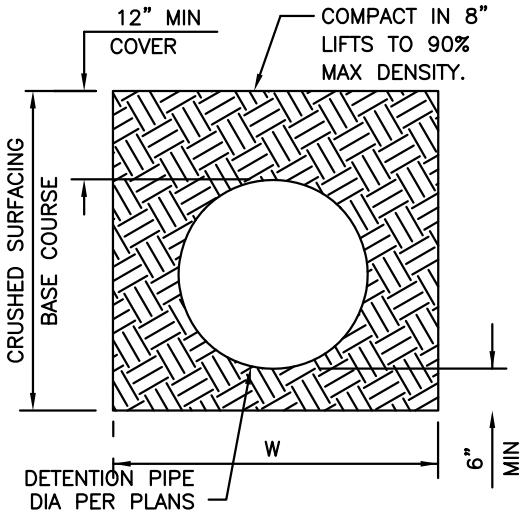

SECTION A-A

CITY OF EVERETT
PUBLIC WORKS DEPARTMENT

TYPICAL CLOSED UNDERGROUND DETENTION SYSTEM

12-03-2010
Date:

416
COE Std Dwg:

T:\ACad\eps-coe design & constr specs for development\CURRENT\std detail dwgs\Dwg Files\STD416.dwg, 2/21/2014 11:07:44 AM

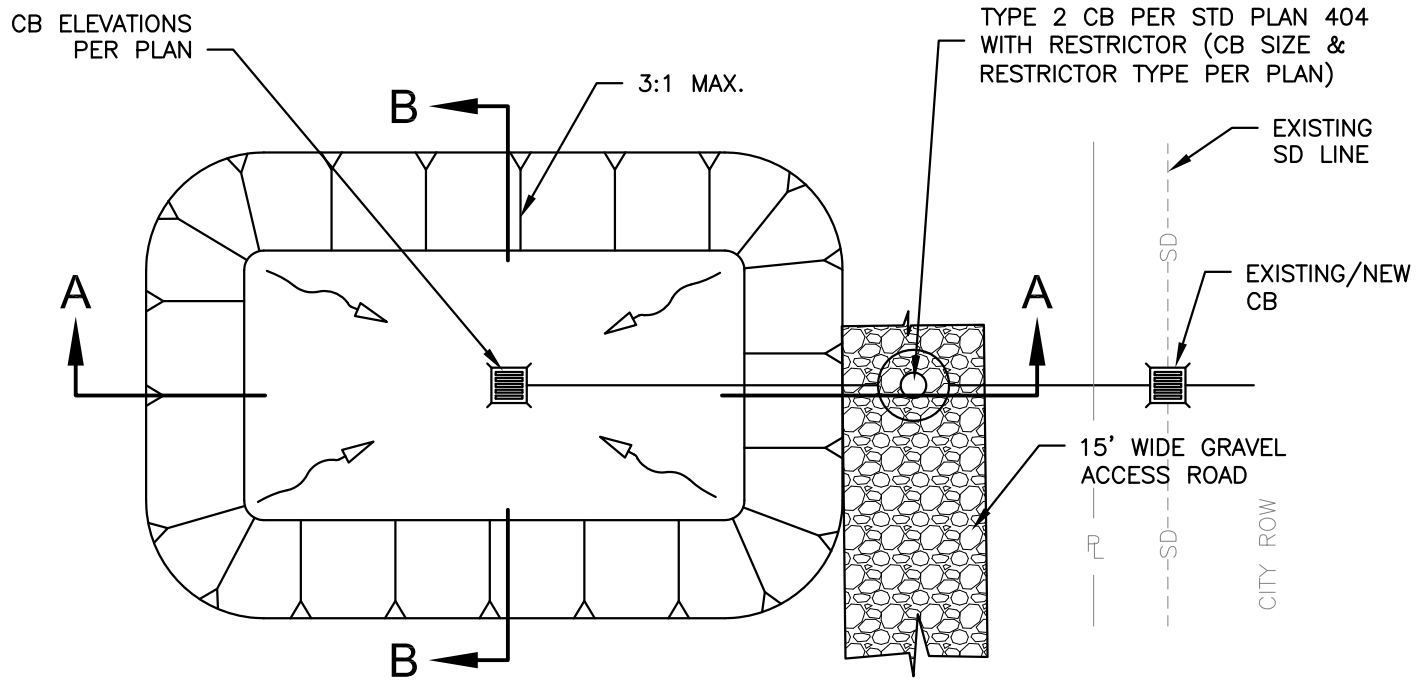

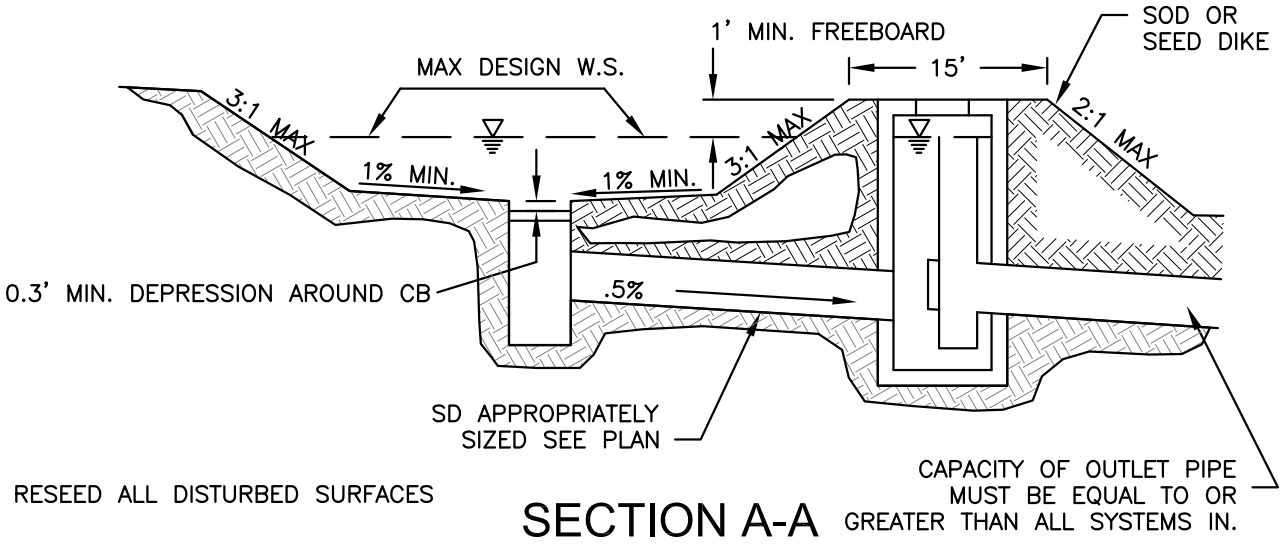

SECTION A-A

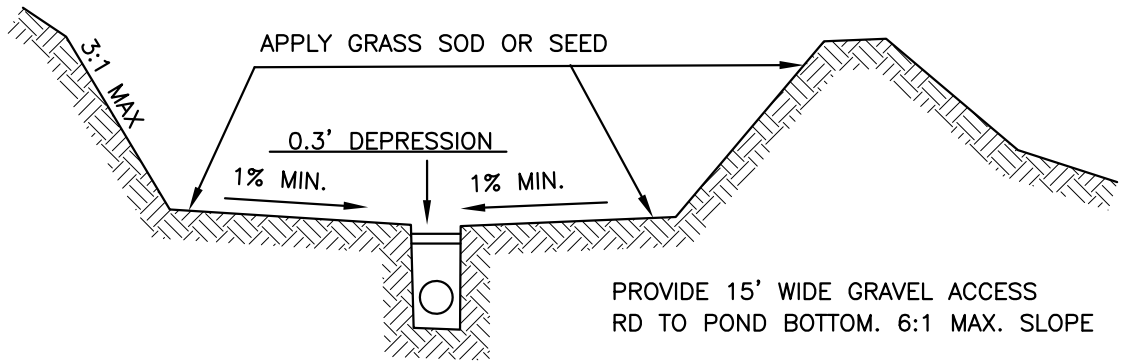

SECTION B-B

CITY OF EVERETT
PUBLIC WORKS DEPARTMENT

TYPICAL DRY TYPE DETENTION POND

Date: 12-03-2010

COE Std Dwg: 417

T:\ACad\eps-coe design & constr specs for development\CURRENT\std detail dwgs\Dwg Files\STD417.dwg, 2/21/2014 11:08:28 AM

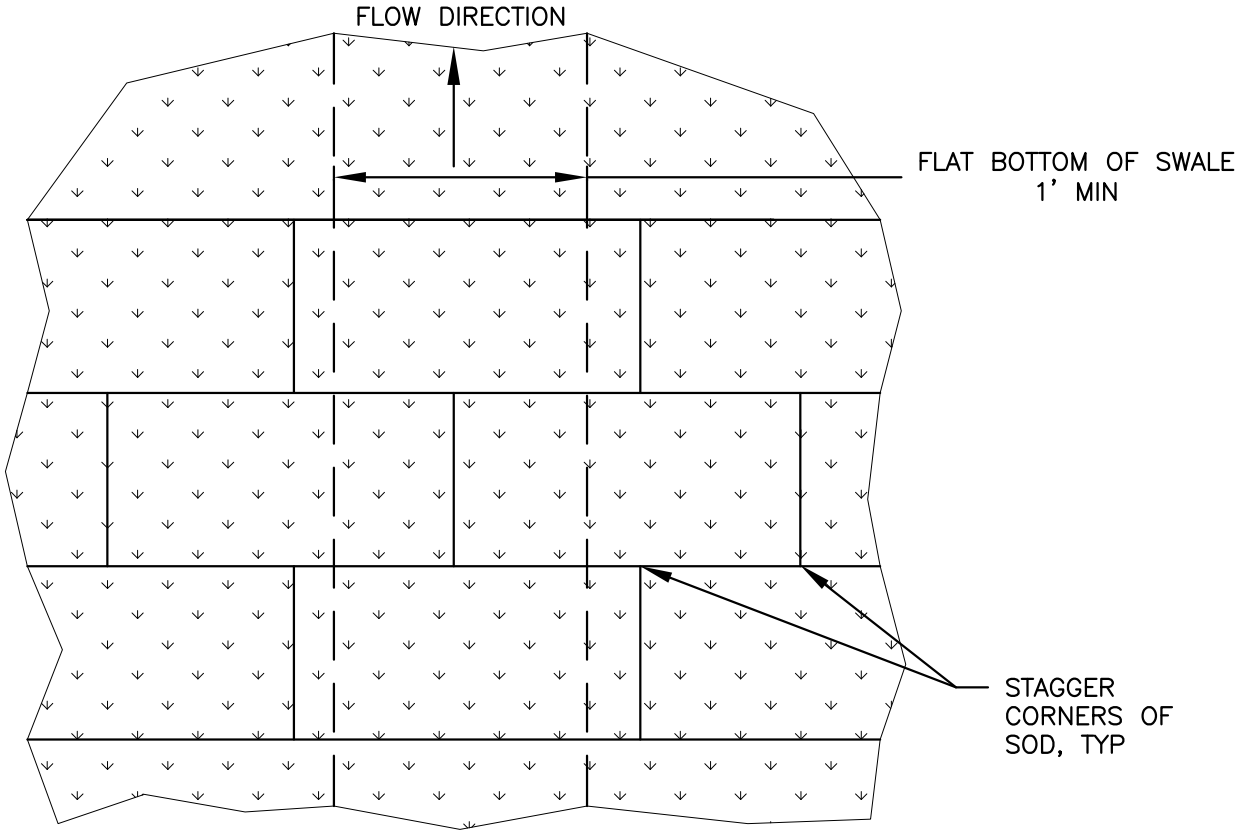

BIOFILTRATION SWALE PLAN VIEW

NTS

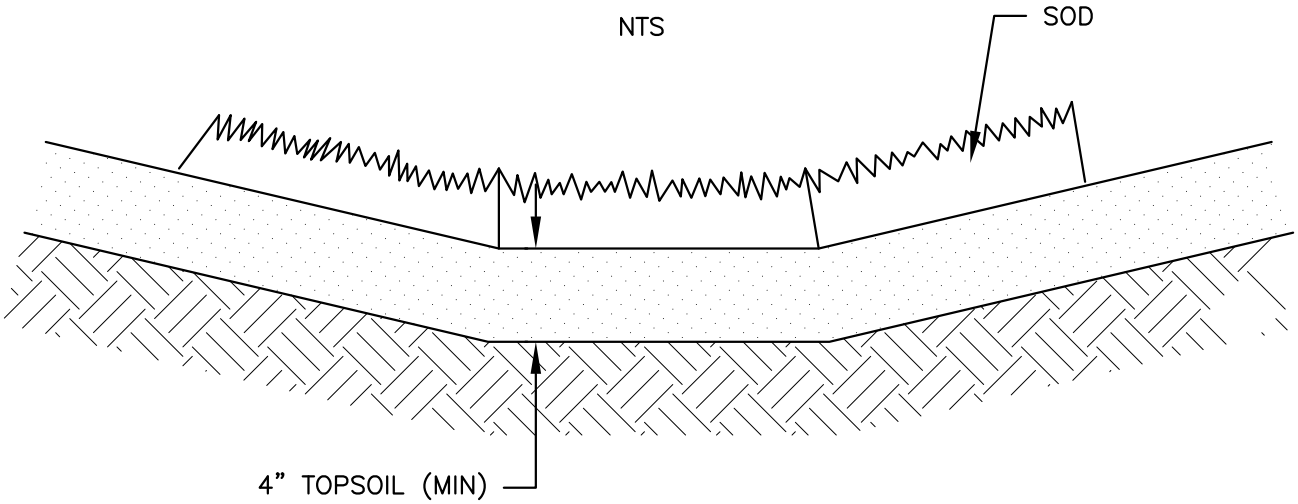

BIOFILTRATION SWALE CROSS SECTION

NTS

NOTE: FOR EMERGENT SWALES, PLANT WETLAND VEGETATION THROUGH SOD (SEE SECTION 3–4.1 OF THE CITY'S STORMWATER MANAGEMENT MANUAL)

CITY OF EVERETT PUBLIC WORKS DEPARTMENT	BIOFILTRATION SWALE (GRASS)	9-4-2008 Date: 419 COE Std Dwg:

T:\ACad\eps-coe design & constr specs for development\CURRENT\std detail dwgs\Dwg Files\STD419.dwg, 2/21/2014 11:09:08 AM

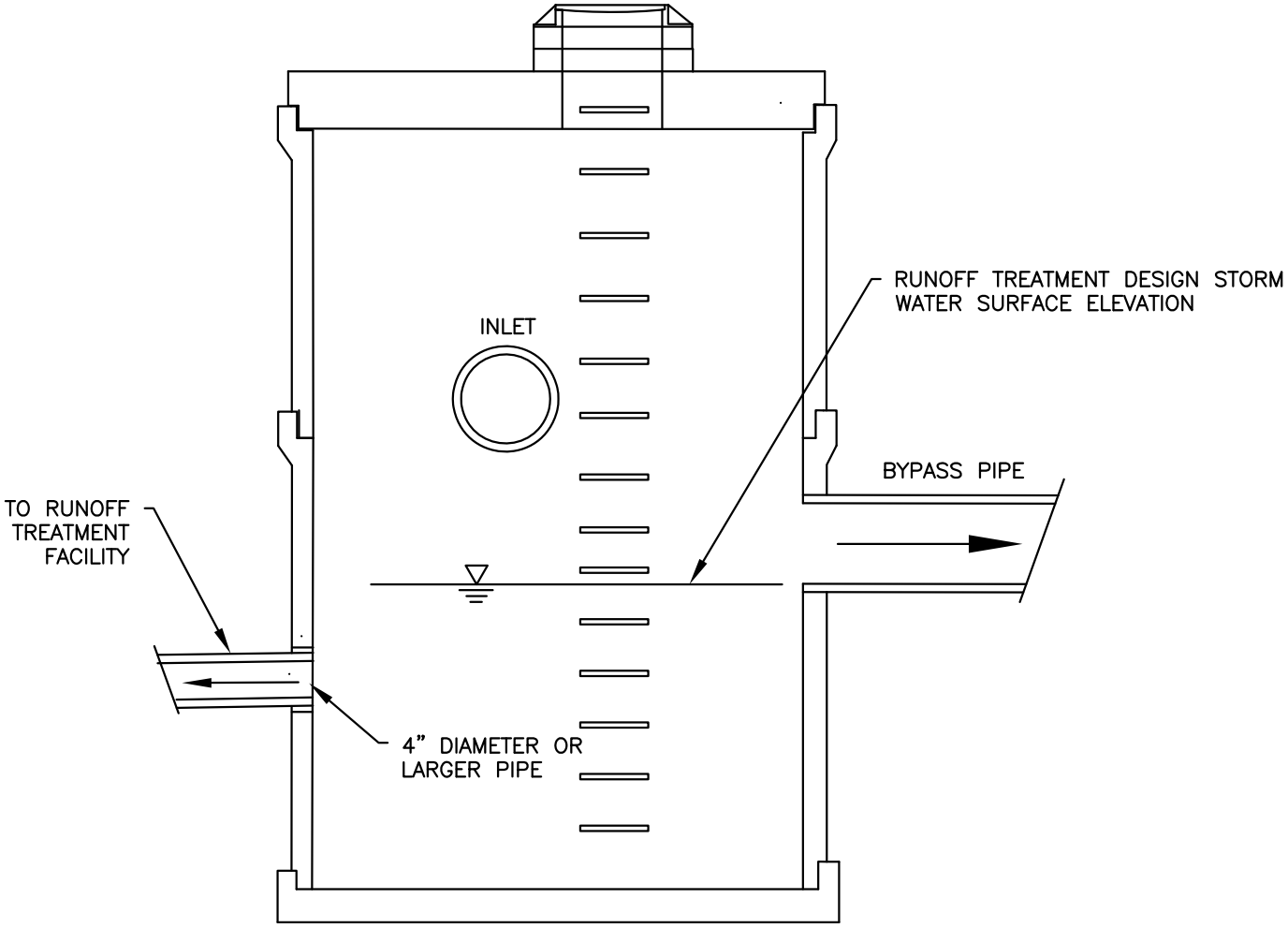

SECTION

CITY OF EVERETT
PUBLIC WORKS DEPARTMENT

BYPASS STRUCTURE
TYPE 1

7-8-2013
Date:

422A
COE Std Dwg:

T:\ACad\eps-coe design & constr specs for development\CURRENT\std detail dwgs\Dwg Files\STD422A.dwg, 2/21/2014 11:09:58 AM

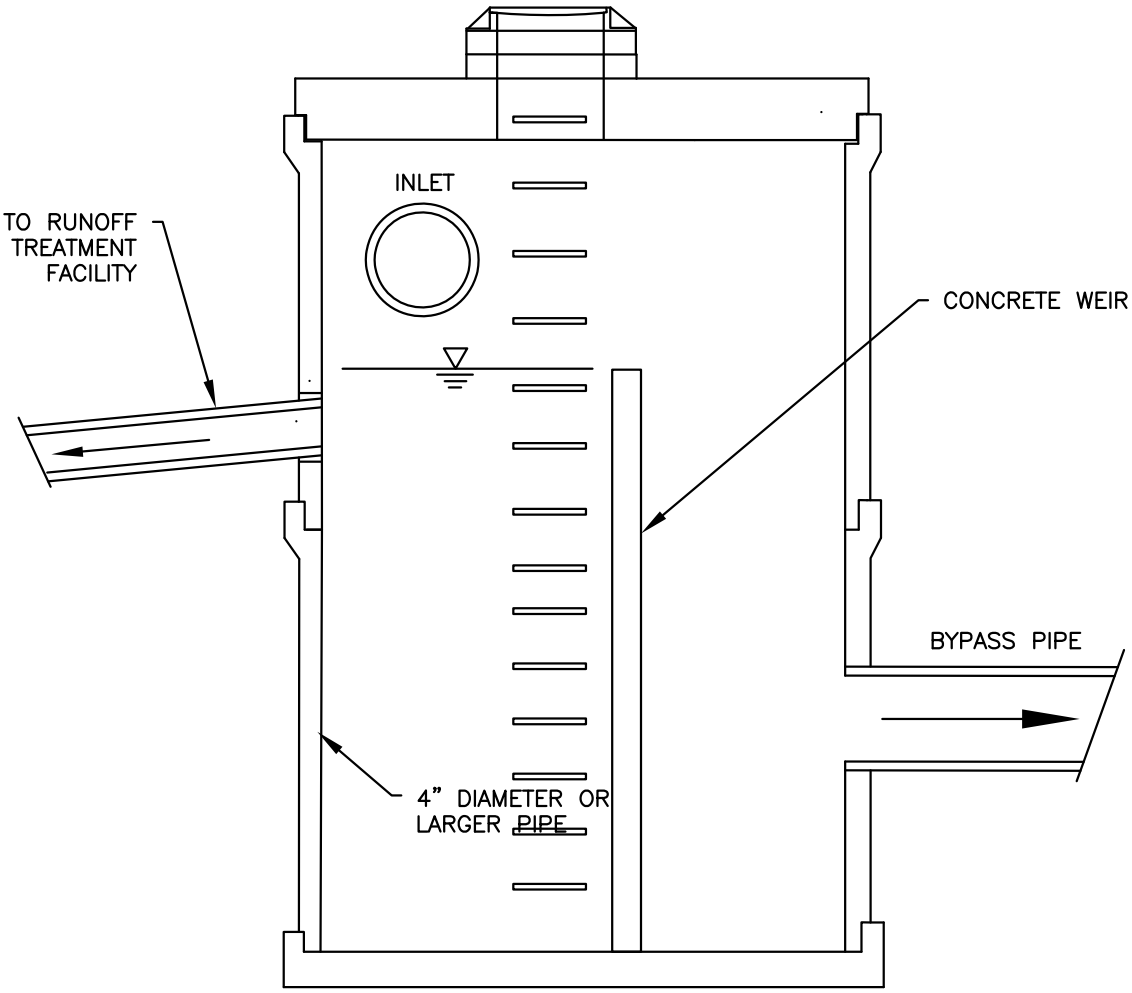

CONCRETE VAULT OR TYPE 2 CATCH BASIN
(SIZE DETERMINED BY CLEARANCE REQIREMENTS)

ELEVATION

CITY OF EVERETT
PUBLIC WORKS DEPARTMENT

BYPASS STRUCTURE
TYPE 2

7-8-2013
Date:

422B
COE Std Dwg:

T:\ACad\eps-coe design & constr specs for development\CURRENT\std detail dwgs\Dwg Files\STD422B.dwg, 2/21/2014 11:10:42 AM

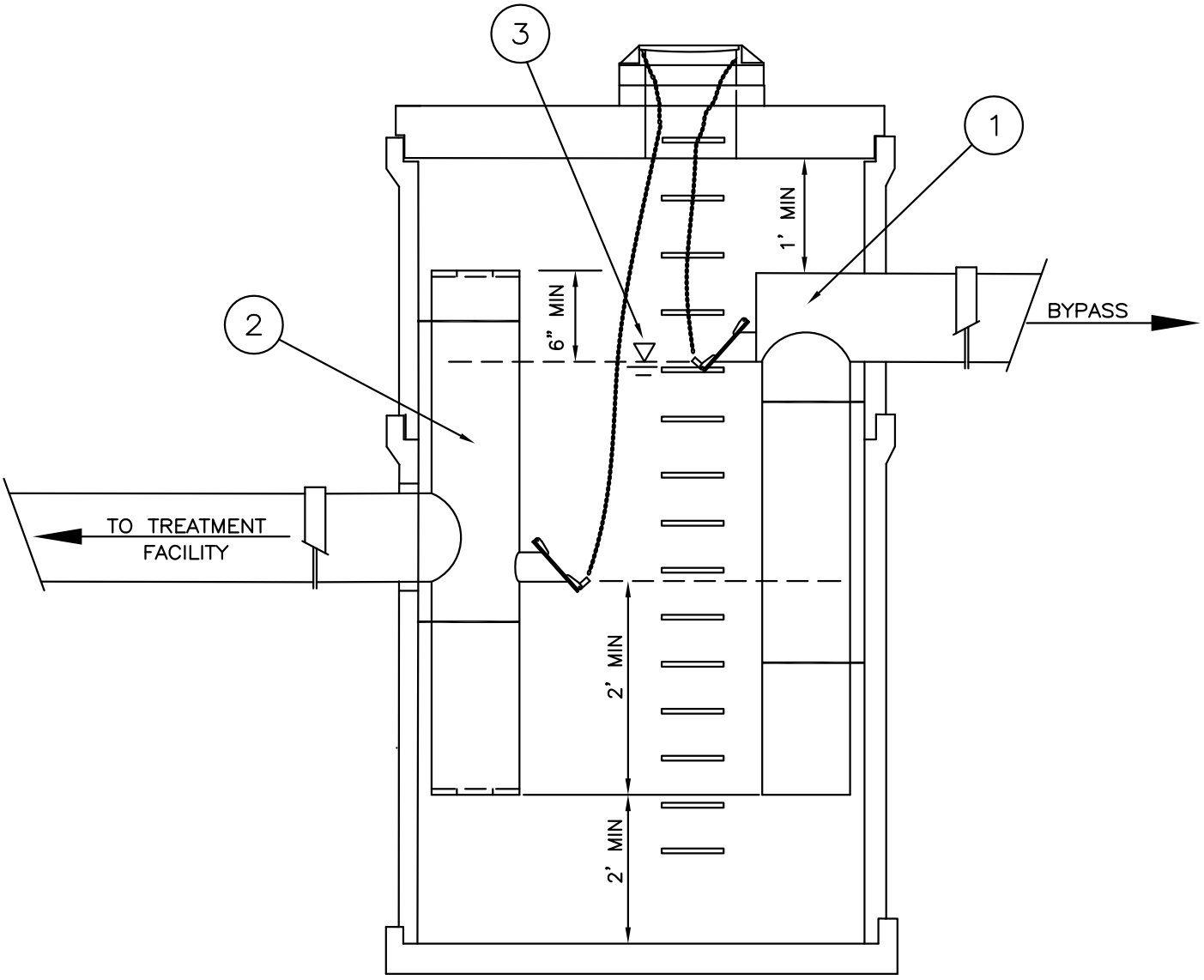

ELEVATION

NOTES:

1. FLOATABLE MATERIAL SEPARATOR PER CITY STD DWG 411, WITHOUT VENT HOLE.
2. RESTRICTOR STANDPIPE WITHOUT SECONDARY OVERFLOW ORIFICES AND WITH PRIMARY ORIFICE AND A CAP OR PLATE WITH 1" DIAMETER (MAX) VENT HOLE. INSTALL PER STD DWG 412A.
3. RUNOFF TREATMENT DESIGN STORM WATER SURFACE ELEVATION, PER PLANS.

CITY OF EVERETT PUBLIC WORKS DEPARTMENT	BYPASS STRUCTURE TYPE 3	12-03-2010 Date: 422C COE Std Dwg:

T:\ACad\eps-coe design & constr specs for development\CURRENT\std detail dwgs\Dwg Files\STD422C.dwg, 2/21/2014 11:11:29 AM

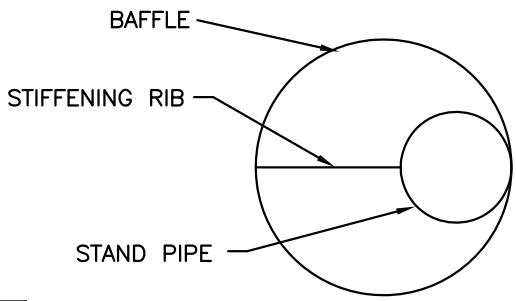

FLOATABLE MATERIAL BAFFLE DETAIL

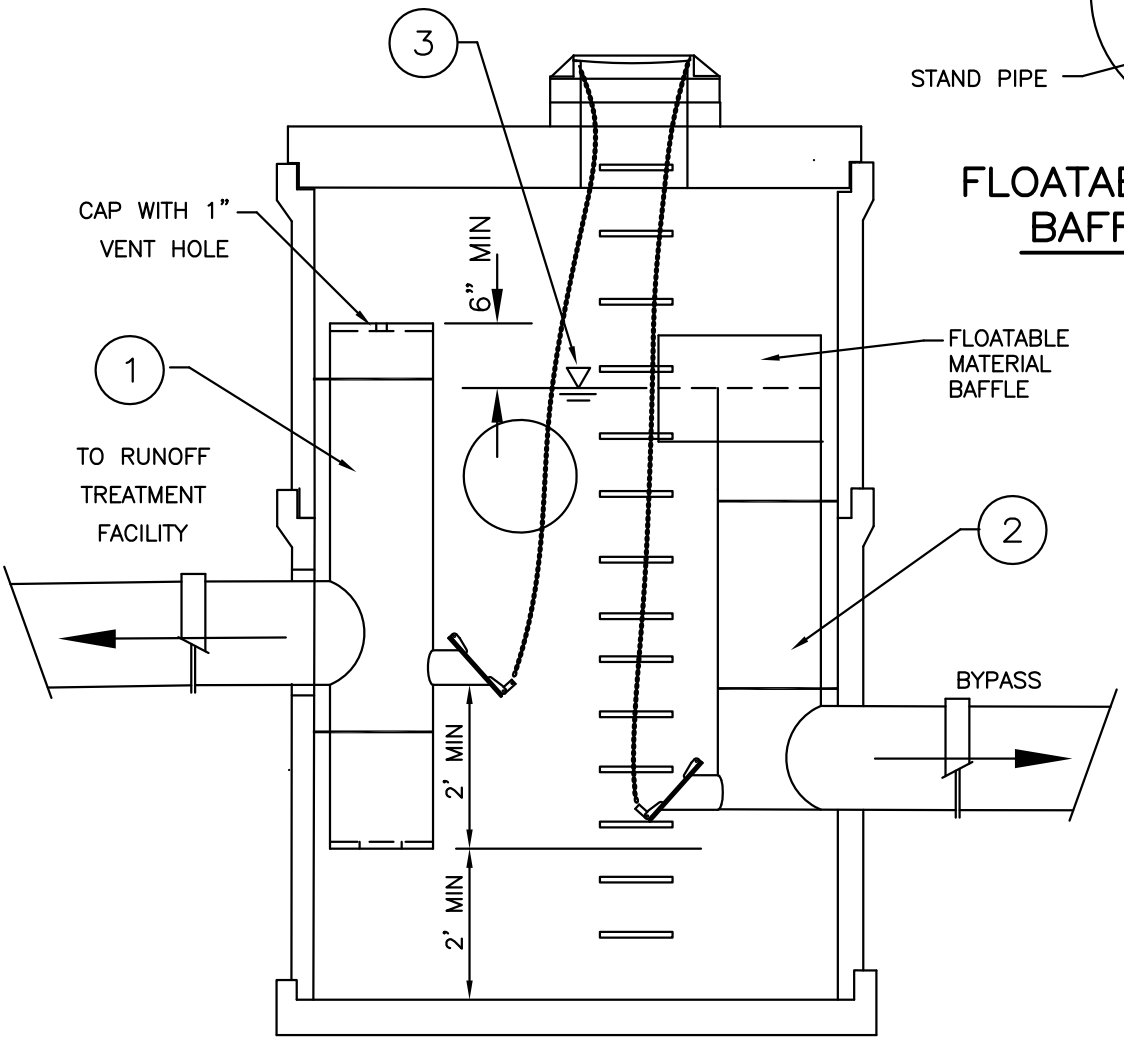

ELEVATION

NOTES:

1. RESTRICTOR STANDPIPE WITHOUT SECONDARY OVERFLOW ORIFICE AND WITH PRIMARY ORIFICE AND CAP OR PLATE WITH 1" DIAMETER (MAX) VENT HOLE. INSTALL PER STD DWG 412A.
2. RESTRICTOR STANDPIPE WITHOUT ANY PRIMARY OR SECONDARY ORIFICES AND WITH FLOATABLE MATERIAL BAFFLE. INSTALL PER CITY STANDARD DWG 412A AND 412C..
3. RUNOFF TREATMENT DESIGN STORM WATER SURFACE ELEVATION, PER PLANS

CITY OF EVERETT PUBLIC WORKS DEPARTMENT	BYPASS STRUCTURE TYPE 4	12-03-2010 Date:
		422D COE Std Dwg:

T:\ACad\eps-coe design & constr specs for development\CURRENT\std detail dwgs\Dwg Files\STD422D.dwg, 2/21/2014 11:12:11 AM

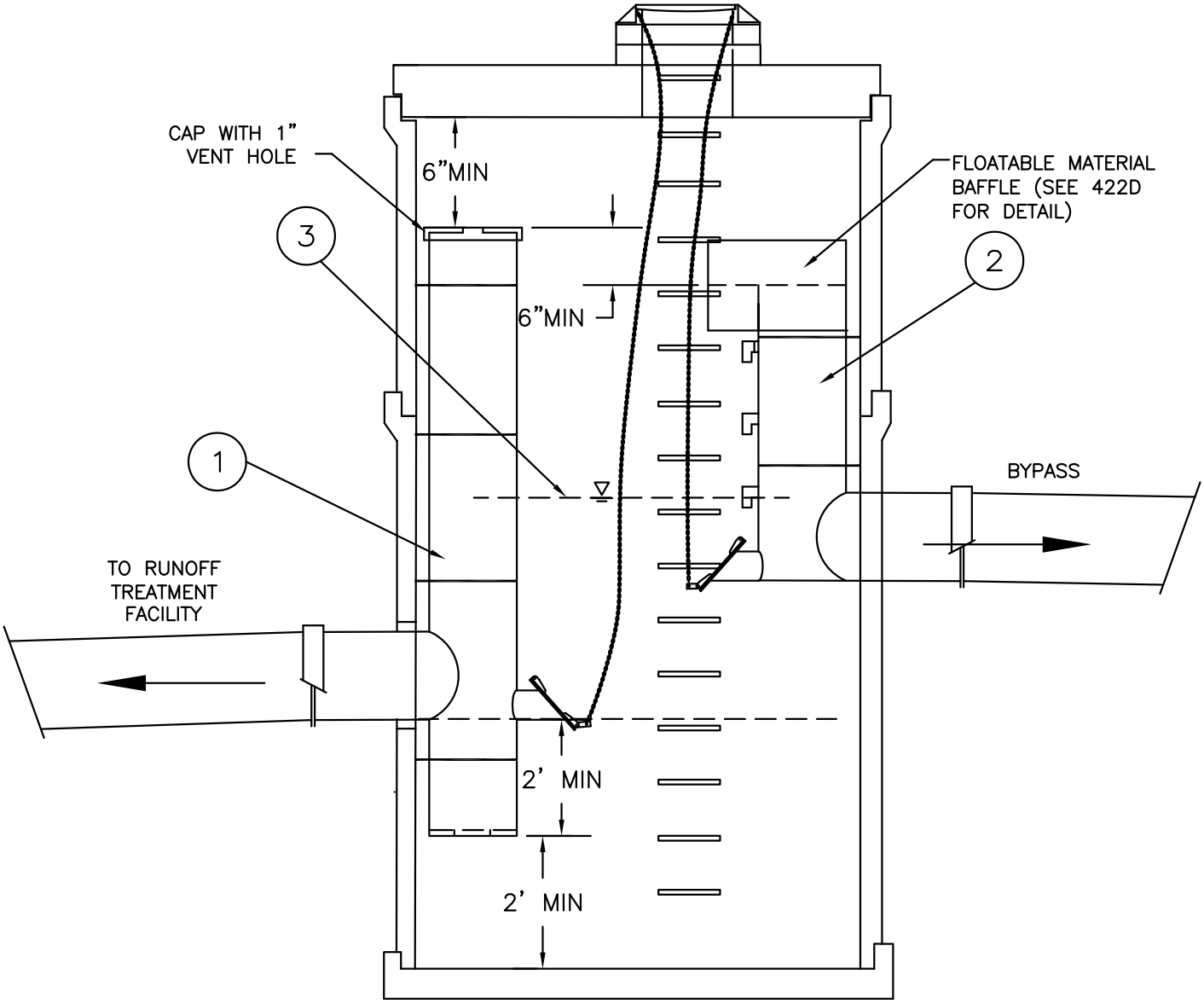

ELEVATION

NOTES:

1. RESTRICTOR STANDPIPE WITHOUT SECONDARY ORIFICES AND WITH PRIMARY ORIFICE AND A CAP OR PLATE WITH 1" DIAMETER (MAX) VENT HOLE. INSTALL PER STD DWG 412A.
2. RESTRICTOR STANDPIPE WITH SECONDARY ORIFICES AND A FLOATABLE MATERIAL BAFFLE (PER STD DWG 422D). INSTALL PER STD DWG 412A AND 412C.
3. RUNOFF TREATMENT DESIGN STORM WATER SURFACE ELEVATION, PER PLANS.

CITY OF EVERETT PUBLIC WORKS DEPARTMENT	MULTIPLE RESTRICTOR STRUCTURE	12-03-2010 Date:
		422E COE Std Dwg:

T:\ACad\eps-coe design & constr specs for development\CURRENT\std detail dwgs\Dwg Files\STD422E.dwg, 2/21/2014 11:13:29 AM

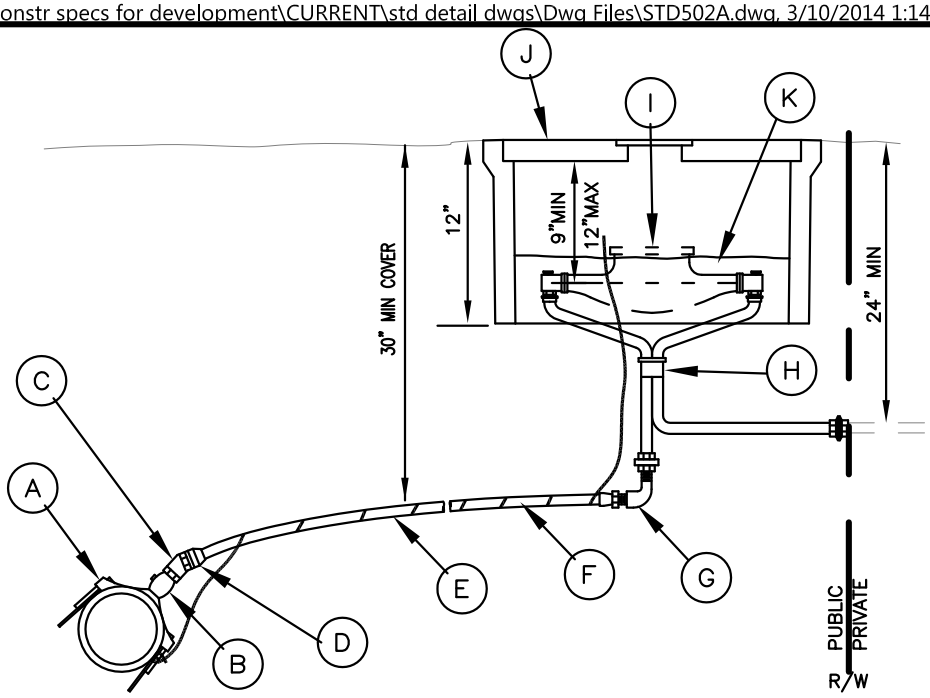

PARTS:

A. ROMAC, FORD, OR MUELLER SERVICE SADDLE WITH C.C. THREAD TO BE USED ON ALL MAINS 4" DIA. AND LARGER. ALL NEW TAPS ON EXISTING WATER MAINS SHALL BE DONE BY THE CITY OF EVERETT UTILITIES DEPARTMENT AT THE DEVELOPERS OR CONTRACTORS EXPENSE

B. CORPORATION STOP:
3/4" – FORD F600,
OR CITY APPROVED EQUAL

C. FORD SERIES LAO–2–33 (1/8 BEND) OR LO–2–33 (1/4 BEND) FITTING FOR FLARE x FLARE COPPER. PHYSICAL BENDS IN POLYETHYLENE PIPE ARE NOT ALLOWED. USE APPROPRIATE 1/4 OR 1/8 BENDS PER NOTE B ABOVE.

D. USE 'MUELLER H–15073 INSTA–TITE' FITTING OR CITY APPROVED EQUAL FOR IPS–PE PLASTIC PIPE X FEMALE COPPER FLARE THREAD.

E. RESIDENTIAL SERVICE
1. PROVIDE 3/4" POLYETHYLENE TUBING MEETING THE FOLLOWING REQUIREMENTS:
   a. AWWA C901.
   b. ASTM D2239, SIDR 7, FOR ID IRON PIPE SIZE (IPS).
   c. ASTM 3350 – PE3608 OR PE4710.

2. PROVIDE A #10 AWG, SINGLE STRAND COPPER WIRE WITH BLUE TYPE UF OR USE COATING SUITABLE FOR DIRECT BURY.
   a. WRAP WIRE AROUND TUBING, ONE WRAP PER FT, ITS ENTIRE LENGTH.
   b. SECURE ONE END AROUND THE SADDLE BOLT BETWEEN TWO NUTS AND EXPOSE A MINIMUM OF 18" OF THE OTHER END IN THE METER BOX.

F NON–RESIDENTIAL SERVICE
1. PROVIDE 3/4" TYPE K COPPER TUBING MEETING ASTM B88, ANSI/NSF 61 & APPLICABLE IAPMO STANDARDS.

G. USE 1/4 OR 1/8 BEND BRASS ST BEND WITH MUELLER 'H–15426 INSTA–TITE' FITTING OR CITY APPROVED EQUAL FOR IPS–PE PLASTIC PIPE X MALE IRON PIPE THREAD.

H. 5/8" x 3/4" METER SETTER SHALL BE "A.Y. MCDONALD" 62–212WWDD33–15 OR APPROVED EQUAL.

I. METERS SHALL BE SUPPLIED AND INSTALLED BY CITY UTILITIES DEPARTMENT AT THE DEVELOPERS OR CONTRACTOR EXPENSE.

J. PROVIDE METER BOX BODY MANUFACTURED BY "RAVEN PRODUCTS, MODEL RMB–11–18–12", MOUSEHOLES CUT, WITH AASTHO H–20 RATED DI FLUSH SOLID COVER LID OR EQUAL.

K. PLACE SAWDUST IN METER BOX AROUND PIPE TO TOP OF METER TO PREVENT FREEZING.

CITY OF EVERETT PUBLIC WORKS DEPARTMENT	3/4" METERED WATER SERVICE	3-10-2014 Date: 502A COE Std Dwg:

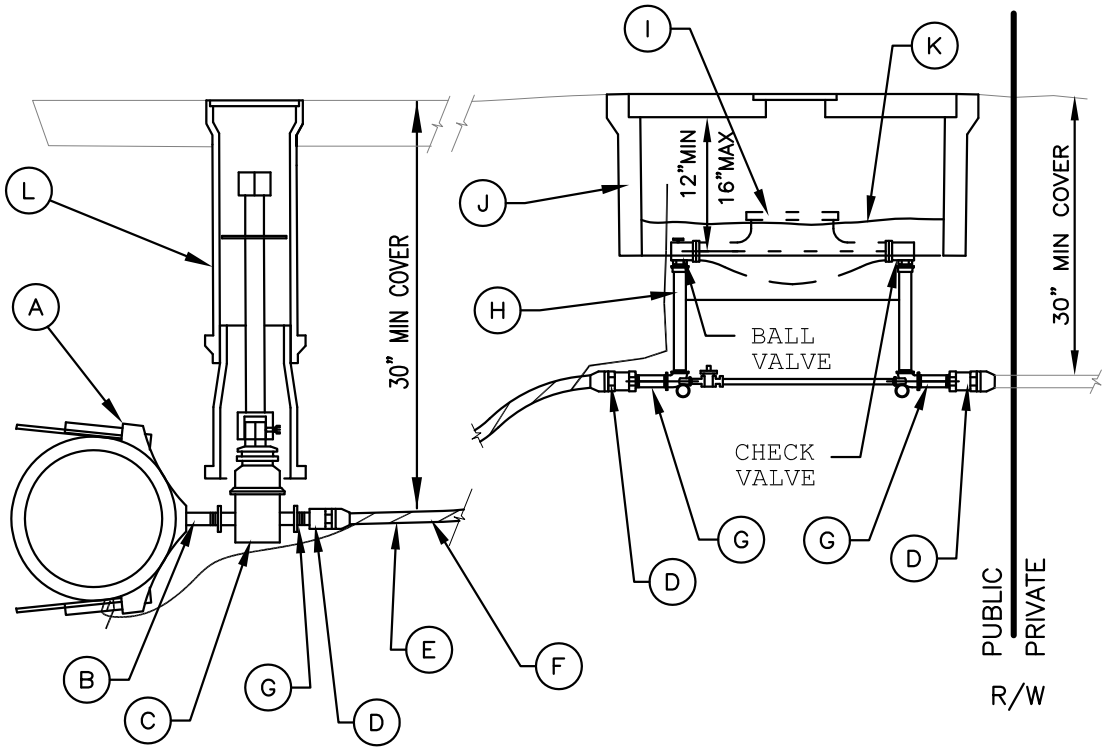

PARTS:

A. ROMAC, FORD OR MUELLER DOUBLE STRAP SERVICE SADDLE WITH I.P. THREAD TO BE USED ON ALL MAINS 4" DIA AND LARGER. ALL NEW TAPS ON EXISTING WATER MAINS SHALL BE DONE BY THE CITY OF EVERETT UTILITIES DEPARTMENT AT THE DEVELOPERS OR CONTRACTORS EXPENSE.
B. 2" BRASS NIPPLE.
C. HEAVY DUTY 2" GATE VALVE WITH RESILIENT SEAT AND 2" OPERATING NUT. GATE VALVES SHALL BE "WATEROUS" SERIES 2500 OR CITY APPROVED EQUAL.
D. MUELLER H-15451 OR H-15428 OR APPROVED EQUAL. USE APPROPRIATE STAINLESS STEEL INSERT STIFFENER WITH POLYETHYLENE TUBING. PHYSICAL BENDS IN POLY PIPE ARE NOT ALLOWED, USE BRASS ELBOWS.

E. RESIDENTIAL SERVICE
   1. PROVIDE 2" POLYETHYLENE TUBING MEETING THE FOLLOWING REQUIREMENTS:
      a. AWWA C901.
      b. ASTM D2737, SIDR 9 (pe3608/4710).
      c. ASTM 3350 – PE3608 OR PE4710.

   2. PROVIDE A #10 AWG, SINGLE STRAND COPPER WIRE WITH BLUE TYPE UF OR USE COATING SUITABLE FOR DIRECT BURY.
      a. WRAP WIRE AROUND TUBING, ONE WRAP PER FT, ITS ENTIRE LENGTH.
      b. SECURE ONE END AROUND THE SADDLE BOLT BETWEEN TWO NUTS AND EXPOSE A MINIMUM OF 18" OF THE OTHER END IN THE METER BOX.

F NON-RESIDENTIAL SERVICE
   1. PROVIDE 2" TYPE K COPPER TUBING MEETING ASTM B88, ANSI/NSF 61 & APPLICABLE IAPMO STANDARDS.

G. BRASS ELBOWS & NIPPLES AS NEEDED.
H. METER SETTERS SHALL BE "FORD" 70 SERIES COPPER SETTER VBH77-12B-11-77 WITH HORIZONTAL INLET AND OUTLET OR APPROVED EQUAL.
I. METER SHALL BE SUPPLIED AND INSTALLED BY CITY UTILITIES DEPARTMENT AT THE DEVELOPERS OR CONTRACTORS EXPENSE.
J. PROVIDE METER BOX BODY MANUFACTURED BY "RAVEN PRODUCTS, MODEL RMB-17-30-12", MOUSEHOLES CUT, WITH AASTHO H-20 RATED DI FLUSH SOLID COVER LID OR EQUAL.
K. PLACE SAWDUST IN METER BOX AROUND PIPE TO TOP OF METER TO PREVENT FREEZING.
L. ADJUSTABLE VALVE BOX AND EXTENSION SEE STD 504.

CITY OF EVERETT PUBLIC WORKS DEPARTMENT	2" METERED WATER SERVICE	3-10-2014 Date: 502B COE Std Dwg:

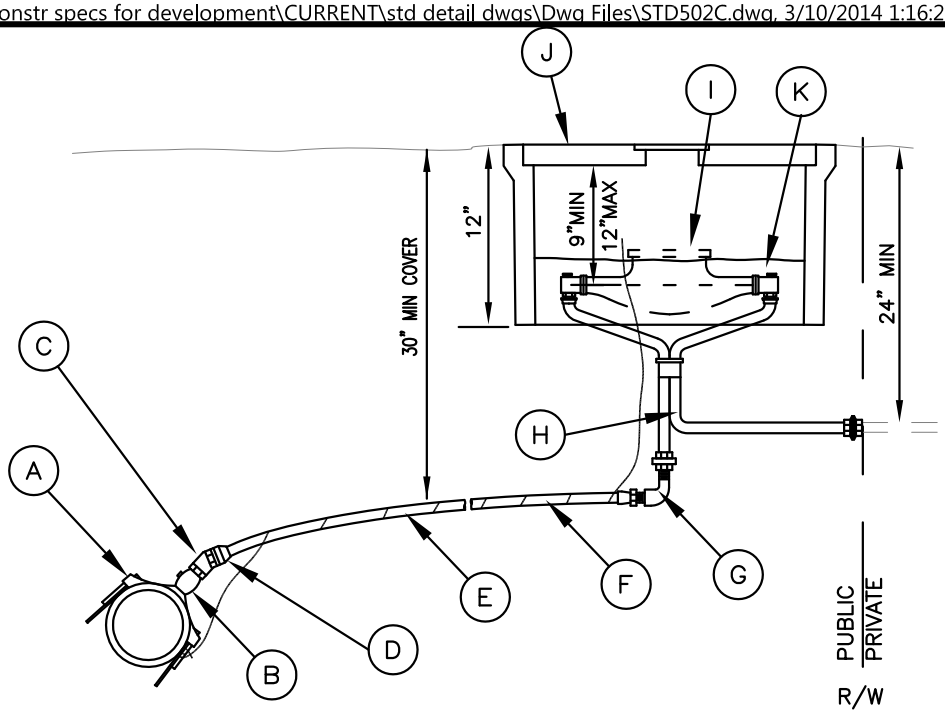

PARTS:

A. ROMAC, FORD, OR MUELLER SERVICE SADDLE WITH C.C. THREAD TO BE USED ON ALL MAINS 4" DIA. AND LARGER. ALL NEW TAPS ON EXISTING WATER MAINS SHALL BE DONE BY THE CITY OF EVERETT UTILITIES DIVISION AT THE DEVELOPERS OR CONTRACTORS EXPENSE

B. CORPORATION STOP:
1" – FORD F600,
OR CITY APPROVED EQUAL

C. FORD SERIES LAO–2–44 (1/8 BEND) OR LO–2–44 (1/4 BEND) FITTING FOR FLARE x FLARE COPPER. PHYSICAL BENDS IN POLYETHYLENE PIPE ARE NOT ALLOWED. USE APPROPRIATE 1/4 OR 1/8 BENDS PER NOTE B ABOVE.

D. USE MUELLER H–15073 INSTA TITE FITTING OR CITY APPROVED EQUAL FOR IPS–PE PLASTIC PIPE X FEMALE COPPER FLARE THREAD.

E. RESIDENTIAL SERVICE
1. PROVIDE 1" POLYETHYLENE TUBING MEETING THE FOLLOWING REQUIREMENTS:
   a. AWWA C901.
   b. ASTM D2239, SIDR 7, FOR ID IRON PIPE SIZE (IPS).
   c. ASTM 3350 – PE3608 OR PE4710.

2. PROVIDE A #10 AWG, SINGLE STRAND COPPER WIRE WITH BLUE TYPE UF OR USE COATING SUITABLE FOR DIRECT BURY.
   a. WRAP WIRE AROUND TUBING, ONE WRAP PER FT, ITS ENTIRE LENGTH.
   b. SECURE ONE END AROUND THE SADDLE BOLT BETWEEN TWO NUTS AND EXPOSE A MINIMUM OF 18" OF THE OTHER END IN THE METER BOX.

F. NON–RESIDENTIAL SERVICE
1. PROVIDE 1" TYPE K COPPER TUBING MEETING ASTM B88, ANSI/NSF 61 & APPLICABLE IAPMO STANDARDS.

G. USE 1/4 OR 1/8 BEND BRASS ST BEND WITH MUELLER 'H–15426 INSTA TITE' FITTING OR CITY APPROVED EQUAL FOR IPS–PE PLASTIC PIPE X MALE IRON PIPE THREAD.

H. 1" METER SETTER SHALL BE "A.Y. MCDONALD" 62–415WWDD44–15 OR CITY APPROVED EQUAL.

I. METERS SHALL BE SUPPLIED AND INSTALLED BY CITY UTILITIES DIVISION AT THE DEVELOPERS OR CONTRACTOR EXPENSE.

J. PROVIDE METER BOX BODY MANUFACTURED BY "RAVEN PRODUCTS, MODEL RMB–15–27–12", MOUSEHOLES CUT, WITH AASTHO H–20 RATED DI FLUSH SOLID COVER LID OR EQUAL.

K. PLACE SAWDUST IN METER BOX AROUND PIPE TO TOP OF METER TO PREVENT FREEZING.

CITY OF EVERETT PUBLIC WORKS DEPARTMENT	1" METERED WATER SERVICE	3-10-2014 Date: 502C COE Std Dwg:

T:\ACad\EPS-COE Design & Constr Specs for Development\CURRENT\STD DETAIL DWGS\Dwg Files\STD503A.dwg, 1, 9/5/2014 1:21:11 PM

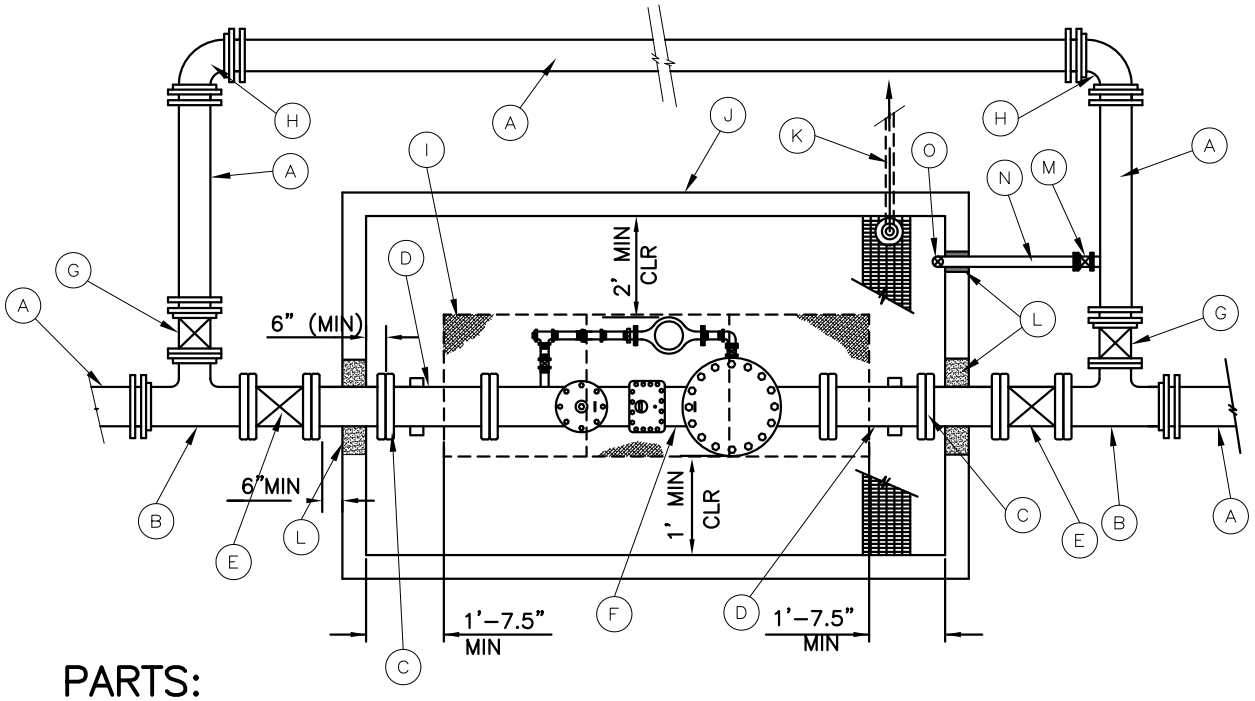

PARTS:

A. DUCTILE IRON PIPE

B. TEE (MJ W/MEGA LUGS x FL)

C. FLANGE COUPLING ADAPTOR (FLxMJ)

D. SPOOL (FLxFL) IF NEEDED

E. GATE VALVE CL 125 (FLxFL).

F. METER ASSEMBLY SEE NOTE 2.

G. GATE VALVE (FLxMJ W/MEGA LUG) WITH ADJUSTABLE VALVE BOX AND EXTENSION SEE STD 504

H. 90° ELL (MJ W/MEGA LUGS)

I. UTILITY VAULT CO LID 332P WITH TRAFFIC LOADED LOCKING STEEL COVERS OR CITY APPROVED EQUAL. PROVIDE NON-SLIP COVER IF VAULT IS LOCATED IN PEDESTRIAN WALKWAY.

J. UTILITY VAULT CO PRECAST VAULT OR CITY APPROVED EQUAL.

K. 2" FLOOR DRAIN. SLOPE TO DAYLIGHT OR TO STORM DRAINAGE SYSTEM.

L. NON-SHRINK GROUT

M. 1" CORPORTION AND SERVICE SADDLE IN ACCORDANCE WITH COE STD DWG 502C PARTS A& B.

N. 1" DRAIN LINE.

O. 1" 90° BEND.

NOTES

1. CONTRACTOR SHALL INSTALL VAULT, BYPASS, AND STRAIGHT PIPE THRU VAULT. CITY UTILITIES DEPARTMENT SHALL PROVIDE AND INSTALL ALL FITTINGS AND APPURTANCES WITHIN THE VAULT INCLUDING METER, VALVES AND SPOOLS AT THE DEVELOPERS OR CONTRACTORS EXPENSE.
2. CITY OF EVERETT WILL SUPPLY AND INSTALL METER AND ACCESSORIES REQUIRED TO COMPLETE CONNECTION.
3. PIPING AND VALVES SHALL BE SUPPORTED BY POURED-IN-PLACE CONCRETE OR STEEL STANDS. THE NUMBER OF AND PLACEMENT OF SUPPORT STANDS TO BE DETERMINED BY CITY OF EVERETT UTILITIES DEPARTMENT ACCORDING TO SIZE OF PIPE AND METER.
4. VAULTS SHALL NOT BE INSTALLED IN AREAS WITH VEHICULAR TRAFFIC
5. GATE VALVES SHALL BE "WATEROUS" SERIES 2500 OR CITY APPROVED EQUAL.

CITY OF EVERETT PUBLIC WORKS DEPARTMENT	FIRE SERVICE COMPOUND METER 4" AND LARGER	9-5-2014 Date: 503A COE Std Dwg:

T:\ACad\EPS-COE Design & Constr Specs for Development\CURRENT\STD DETAIL DWGS\Dwg Files\STD503B.dwg, SH1, 9/5/2014 1:20:37 PM

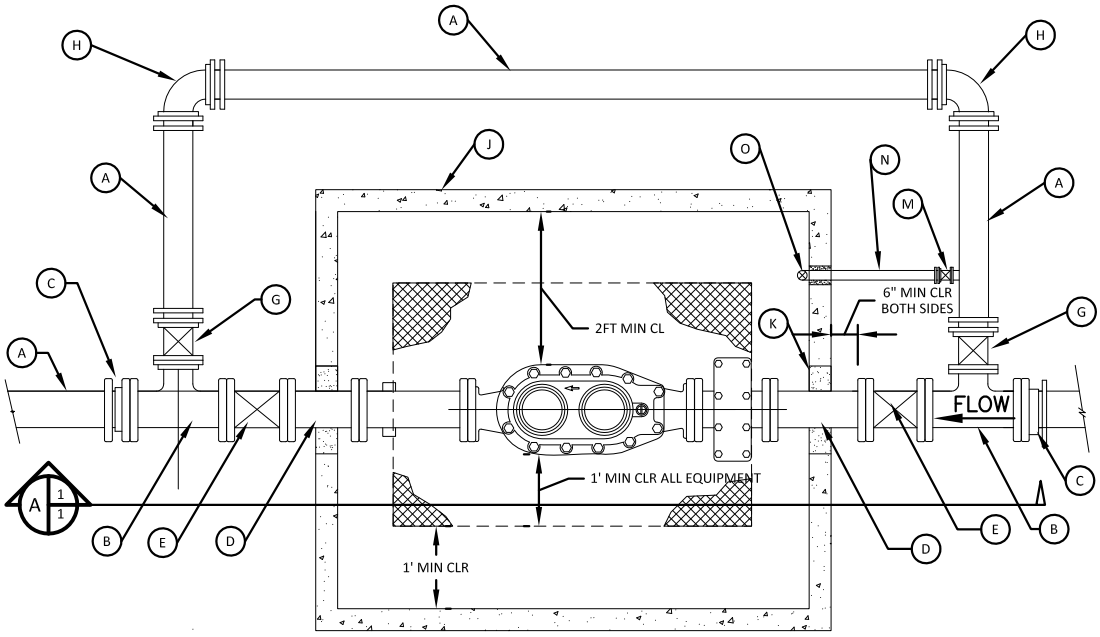

VAULT PLAN

SCALE: 1"= N.T.S.

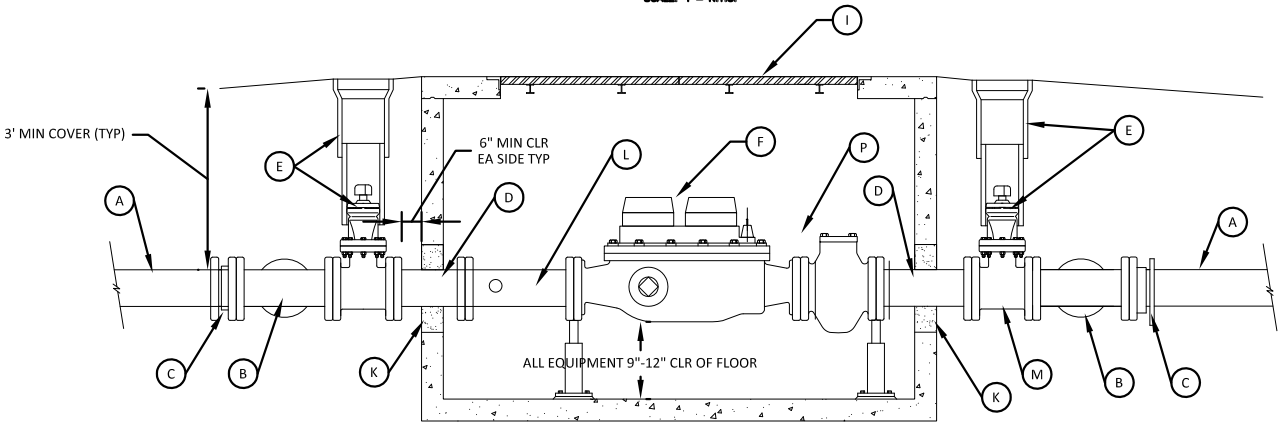

VAULT SECTION

SCALE: H1"=NTS
V1"=MTS

PARTS:

A. DUCTILE IRON PIPE

B. TEE (MJ W/MEGA LUGS x FL)

C. FLANGE COUPLING ADAPTOR (FLxMJ)

D. SPOOL (FLxFL).

E. GATE VALVE CL 125 (FLxFL) W/2" OPERATING NUT & ADJUSTABLE VALVE BOX WITH EXTENSIONS. SEE STD 504

F. METER ASSEMBLY SEE NOTE 2, SHEET 2.

G. GATE VALVE (FLxMJ W/MEGA LUG) WITH ADJUSTABLE VALVE BOX AND EXTENSION SEE STD 504

H. 90° ELL (MJ W/MEGA LUGS)

I. UTILITY VAULT CO LID 332P WITH TRAFFIC LOADED LOCKING STEEL COVERS OR CITY APPROVED EQUAL. PROVIDE NON-SLIP COVER IF VAULT IS LOCATED IN PEDESTRIAN WALKWAY.

J. UTILITY VAULT CO PRECAST VAULT OR CITY APPROVED EQUAL.

K. NON-SHRINK GROUT.

L. FLANGE x FLANGE SPOOL WITH TWO 2" TEST OUTLETS & BRASS PLUGS. LENGTH OF SPOOL TO BE 3 TIMES THE DIAMETER OF THE PIPE TO THE TEST PLUGS PLUS 5"

M. 1" CORPORTION AND SERVICE SADDLE IN ACCORDANCE WITH COE STD DWG 502C, PARTS A & B.

N. 1" DRAIN LINE.

O. 1" 90° BEND.

P. STRAINER.

CITY OF EVERETT PUBLIC WORKS DEPARTMENT	COMPOUND METER FOR 4", 6" & 8" SHEET 1 OF 2	9-5-2014 Date: 503B COE Std Dwg:

T:\ACad\EPS-COE Design & Constr Specs for Development\CURRENT\STD DETAIL DWGS\Dwg Files\STD503B.dwg, SH2, 9/5/2014 1:19:58 PM

GENERAL NOTES

1. CONTRACTOR SHALL INSTALL VAULT, BYPASS, AND STRAIGHT PIPE THRU VAULT. CITY UTILITIES DEPARTMENT SHALL PROVIDE AND INSTALL ALL FITTINGS AND APPURTANCES WITHIN THE VAULT INCLUDING METER, VALVES AND SPOOLS AT THE DEVELOPERS OR CONTRACTORS EXPENSE.
2. CITY OF EVERETT WILL SUPPLY AND INSTALL METER AND ACCESSORIES REQUIRED TO CONNECT TO NOTES "L" & "P", SHEET 1 OF THIS STD DETAIL.
3. PIPING AND VALVES SHALL BE SUPPORTED BY STEEL STANDS. THE NUMBER OF AND PLACEMENT OF SUPPORT STANDS TO BE DETERMINED BY CITY OF EVERETT UTILITIES DEPARTMENT ACCORDING TO SIZE OF PIPE AND METER
4. VALVES SHALL HAVE A MINIMUM CLEARANCE OF 3" BETWEEN OPERATING NUT AND TOP OF VAULT.
5. VAULTS SHALL NOT BE INSTALLED IN AREAS WITH VEHICULAR TRAFFIC
6. GATE VALVES SHALL BE "WATEROUS" SERIES 2500 OR CITY APPROVED EQUAL.
7. INSTALLATION OF COMPOUND METERS LARGER THAN 8" SHALL BE APPROVED BY THE CITY ON AN INDIVIDUAL BASIS.

EVERETT **CITY OF EVERETT** **PUBLIC WORKS DEPARTMENT**	COMPOUND METER FOR 4", 6" & 8" SHEET 2 OF 2	9-5-2014 Date:
		503B COE Std Dwg:

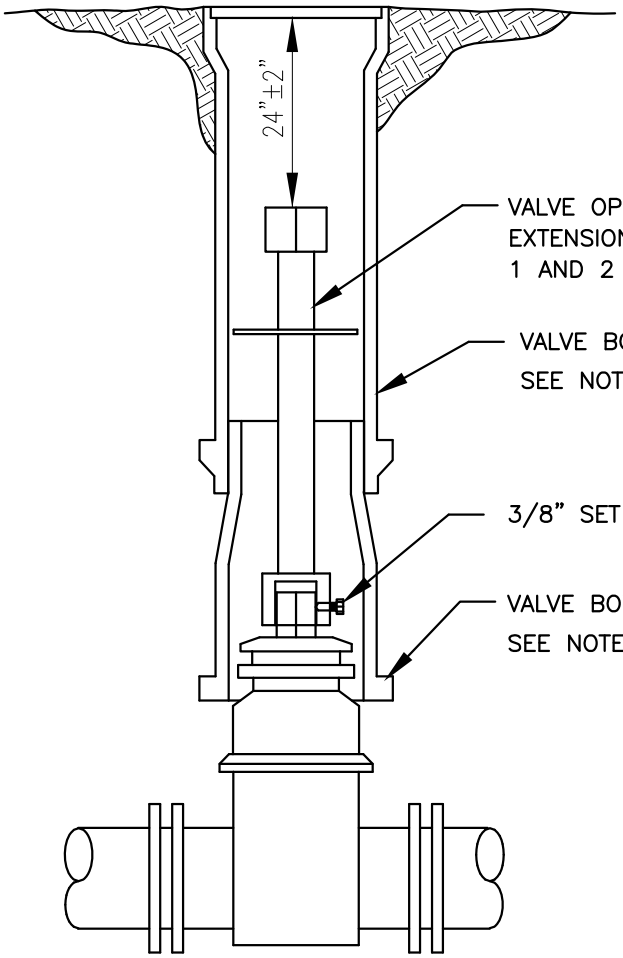

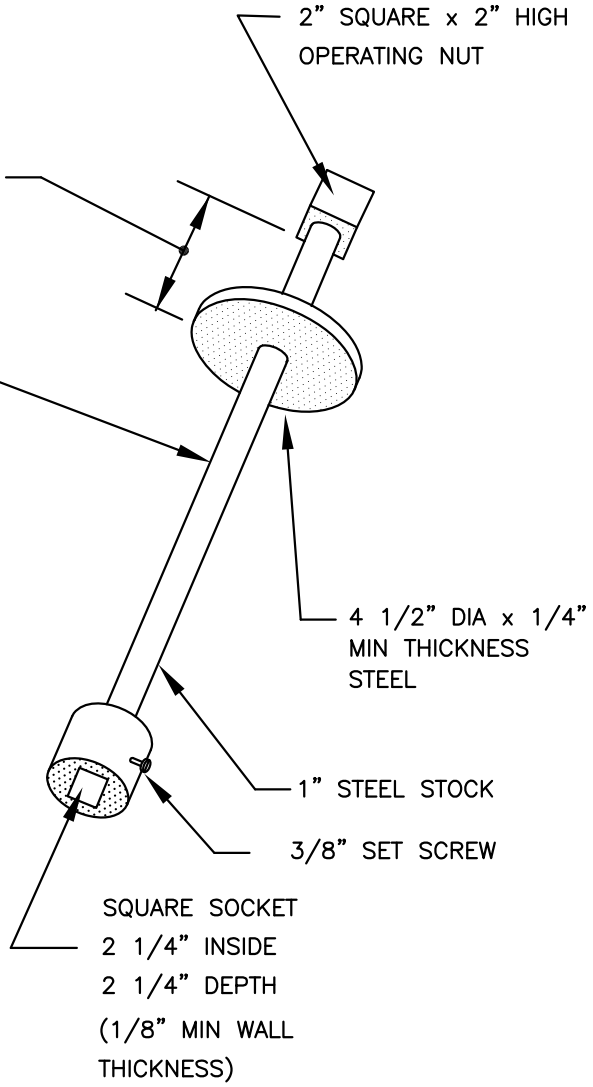

VALVE BOX AND EXTENSION

VALVE OPERATING NUT EXTENSION

NOTES:

1. VALVE OPERATING NUT EXTENSIONS ARE REQUIRED WHEN THE VALVE NUT IS MORE THAN THREE (3) FEET BELOW FINISHED GRADE. EXTENSIONS ARE TO BE A MINIMUM OF ONE (1) FOOT LONG. ONLY ONE EXTENSION WILL BE ALLOWED PER VALVE.
2. ALL VALVE OPERATING NUT EXTENSIONS ARE TO BE MADE OF STEEL, SIZED AS NOTED, AND PAINTED WITH TWO (2) COATS OF METAL PAINT.
3. VALVE BOXES IN PAVED AREAS SHALL BE #940 STYLE CAST IRON, TWO PIECE UNITS, DESIGNED WITH LUGS ON COVER AND DEEP SKIRT. IN GRASS, NON–PAVED OR NON–TRAFFIC AREAS USE OF PLASTIC VALVE BOXES, WITH CAST IRON LID AS MANUFACTURED BY HANDLEY INDUSTRIES ARE ACCEPTABLE.
4. USE OF PLASTIC VALVE BOX EXTENSIONS, AS MANUFACTURED BY HANDLEY INDUSTRIES ARE ACCEPTABLE.

CITY OF EVERETT PUBLIC WORKS DEPARTMENT	VALVE BOX AND EXTENSION	9-13-2007 Date:
		504 COE Std Dwg:

T:\ACad\eps-coe design & constr specs for development\CURRENT\std detail dwgs\Dwg Files\STD504.dwg, 2/21/2014 1:40:01 PM

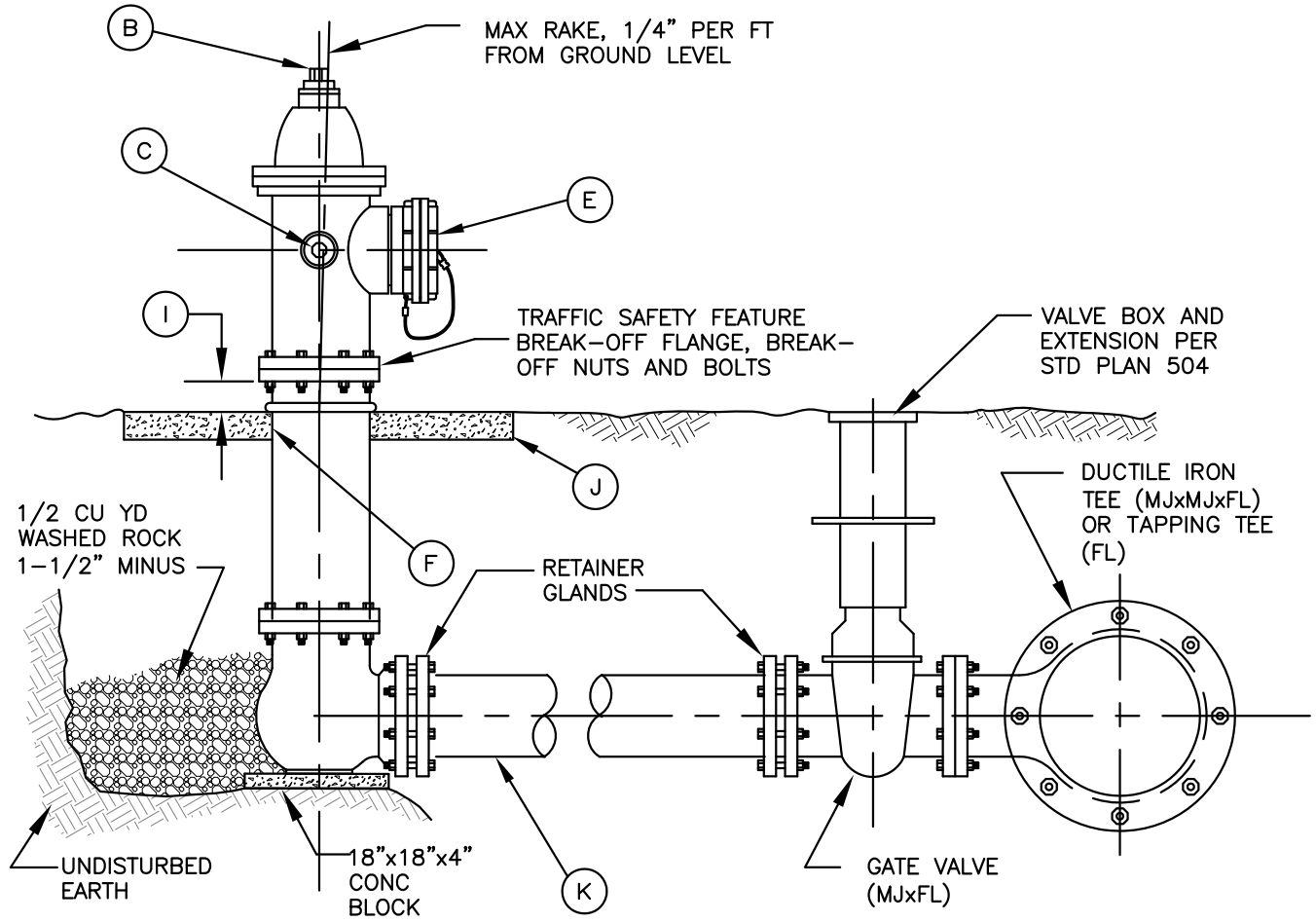

PARTS:

A. HYDRANTS AND ALL MATERIALS SHALL CONFORM TO AWWA STANDARDS AND SHALL BE OF STANDARD MANUFACTURE (MUELLER SUPER CENTURION #250, WATEROUS PACER #WB67, OR CITY APPROVED EQUAL).

B. 5-1/4" VALVE MINIMUM.

C. 1-1/4" OPERATING NUT AND CAP NUT FOR 2-1/2" PORTS.

D. NATIONAL STANDARD THREAD ON 2-1/2" PORTS.

E. 5" STORZ FITTING WITH NATIONAL STANDARD THREAD ON THE 4-1/2" PORT.

F. IF HYDRANT RISES THROUGH CONCRETE, USE EXPANSION STRIP AROUND HYDRANT BARREL, PER STD PLAN 509. IN ADDITION, INSTALLATION OF THE HYDRANT ON PRIVATE PROPERTY SHALL EQUAL OR EXCEED THE STANDARDS FOR INSTALLATION OF PUBLIC FIRE HYDRANTS IN THE CITY OF EVERETT.

G. PROVIDE FOR VEHICULAR TRAFFIC PROTECTION WHEN NECESSARY PER STD. PLAN 510.

H. STEAMER PORT TO BE FACING STREET OR ROADWAY FOR FIRE ENGINE ACCESS.

I. BREAK-OFF FLANGE TO BE 2"-4" ABOVE GROUND LEVEL.

J. INSTALL CONCRETE PAD AROUND HYDRANT IN UNPAVED, SOD AND ASPHALT AREAS PER STD. PLAN 509.

K. HYDRANT CONNECTION PIPE TO BE DUCTILE IRON CLASS 52, ANY INTERMEDIATE JOINTS TO BE MJ WITH RETAINER GLANDS, OR FIELD LOCK GASKETS.

L. FIRE HYDRANTS SHALL BE PAINTED WITH TWO COATS OF HIGH GLOSS CATERPILLAR YELLOW, LUXLITE #6100-516 OR "RUST-OLEUM" #7448 OR APPROVED EQUAL. THE PORT CAPS WILL BE PAINTED BLACK.

M. PROVIDE FOR A MINIMUM OF 3' CLEAR ZONE AROUND HYDRANT.

EVERETT **CITY OF EVERETT** **PUBLIC WORKS DEPARTMENT**	FIRE HYDRANT ASSEMBLY	9-13-2007 Date: 507 COE Std Dwg:

T:\ACad\eps-coe design & constr specs for development\CURRENT\std detail dwgs\Dwg Files\STD507.dwg, 2/21/2014 1:41:56 PM

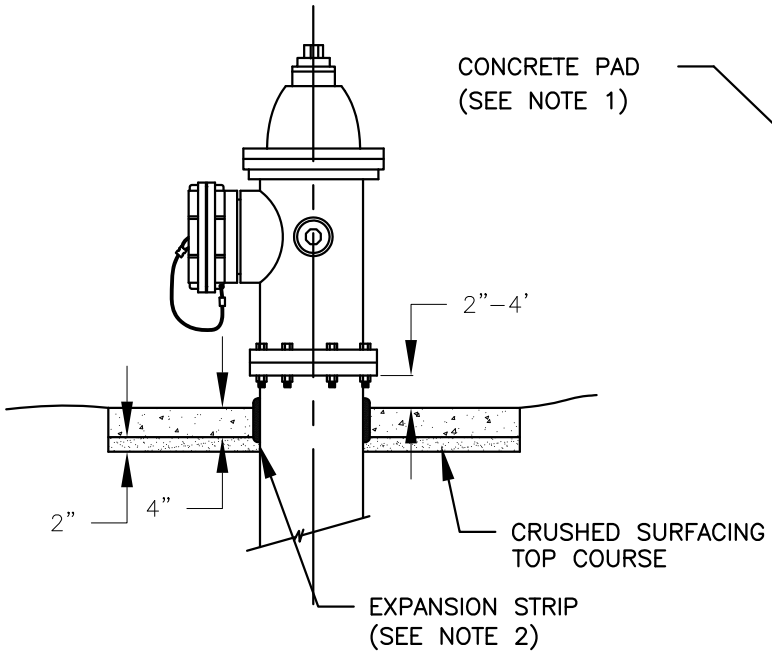

ELEVATION

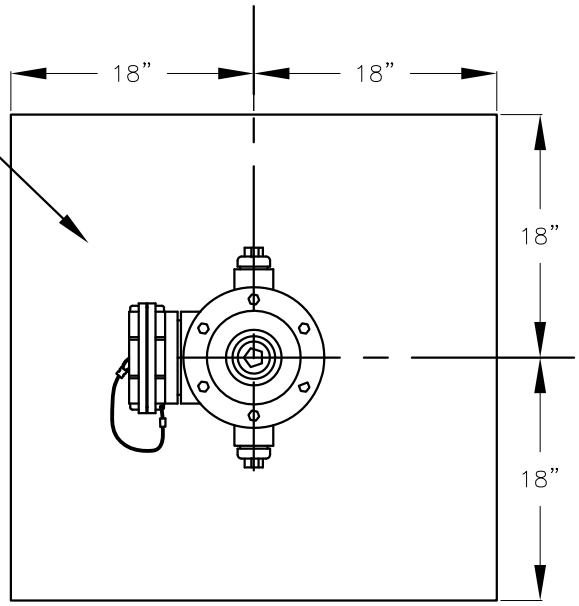

PLAN

NOTES:

1. CONCRETE SHALL BE CLASS 3000.
2. INSTALL 1/2"x 4" EXPANSION STRIP AROUND HYDRANT.

CITY OF EVERETT **PUBLIC WORKS DEPARTMENT**	FIRE HYDRANT CONCRETE PAD	9-13-2007 Date: 509 COE Std Dwg:

T:\ACad\eps-coe design & constr specs for development\CURRENT\std detail dwgs\Dwg Files\STD509.dwg, 2/21/2014 1:43:03 PM

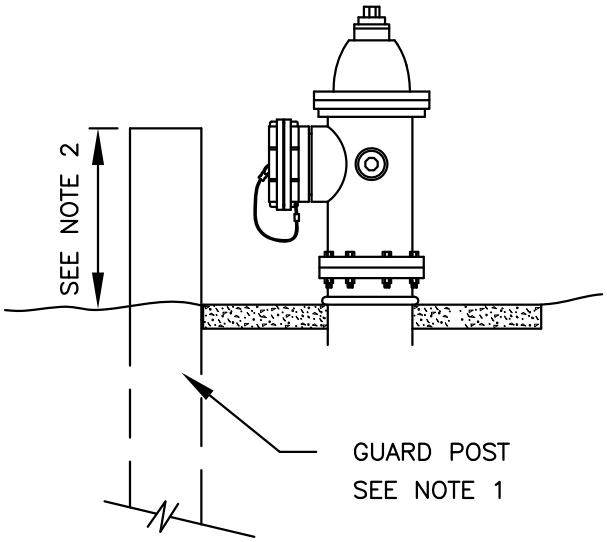

ELEVATION

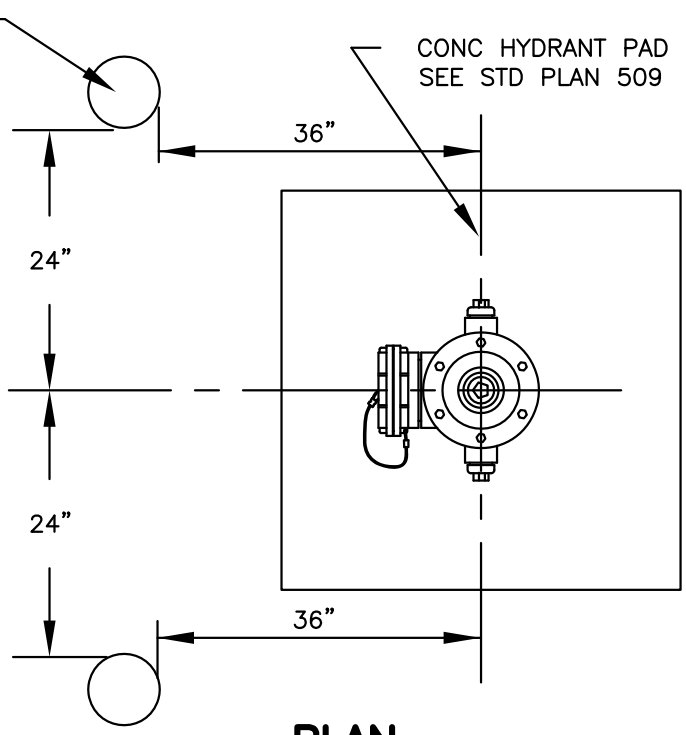

PLAN

FIRE HYDRANT GUARD POST

(SEE NOTES 1 AND 2)

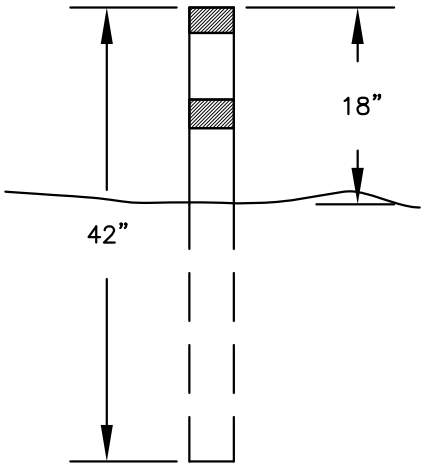

VALVE MARKER POST

(SEE NOTES 3, 4 AND 5)

NOTES:

1. GUARD POSTS SHALL BE 6' LONG, 9"IN DIAMETER PRECAST CONCRETE OR 6' LONG, 6" DIAM SCH 40, CONCRETE FILLED CLASS 52 STEEL PIPE. PAINTED WITH TWO COATS OF KELLY–MOORE LUXLITE Q.D. ALKYD GLOSS ENAMEL #6100–516 CAT YELLOW OR CITY APPROVED EQUAL.
2. TOP OF GUARD POST SHALL BE LEVEL WITH TOP OF PUMPER PORT.
3. VALVE MARKER POST SHALL BE 42" PORTABLE TRAFFIC DELINEATOR POST W/TWO REFLECTOR STRIPS. THEY SHALL BE FURNISHED NEW AND UNUSED AND BURIED 24" DEEP, TO LEAVE 18" EXPOSED AS A MARKER POST THE LETTER "V" AND THE DISTANCE TO THE VALVE SHALL BE STENCILED ON THE POST WITH 2" HIGH NUMERALS, WITH BLACK ENAMEL PAINT.
4. VALVE MARKER POSTS SHALL BE INSTALLED FOR ALL VALVES LOCATED IN UNIMPROVED OR UNPAVED AREAS. VALVE MARKER POSTS SHALL BE SET AS DIRECTED BY THE PUBLIC WORKS INSPECTOR IN A SAFE AND REASONABLY CONSPICUOUS LOCATION.
5. VALVE MARKER POSTS ARE NOT REQUIRED FOR AUXILIARY HYDRANT VALVES.

CITY OF EVERETT PUBLIC WORKS DEPARTMENT	FIRE HYDRANT GUARD POST AND VALVE MARKER POST	9-13-2007 Date: 510 COE Std Dwg:

T:\ACad\eps-coe design & constr specs for development\CURRENT\std detail dwgs\Dwg Files\STD510.dwg, 2/21/2014 1:55:51 PM

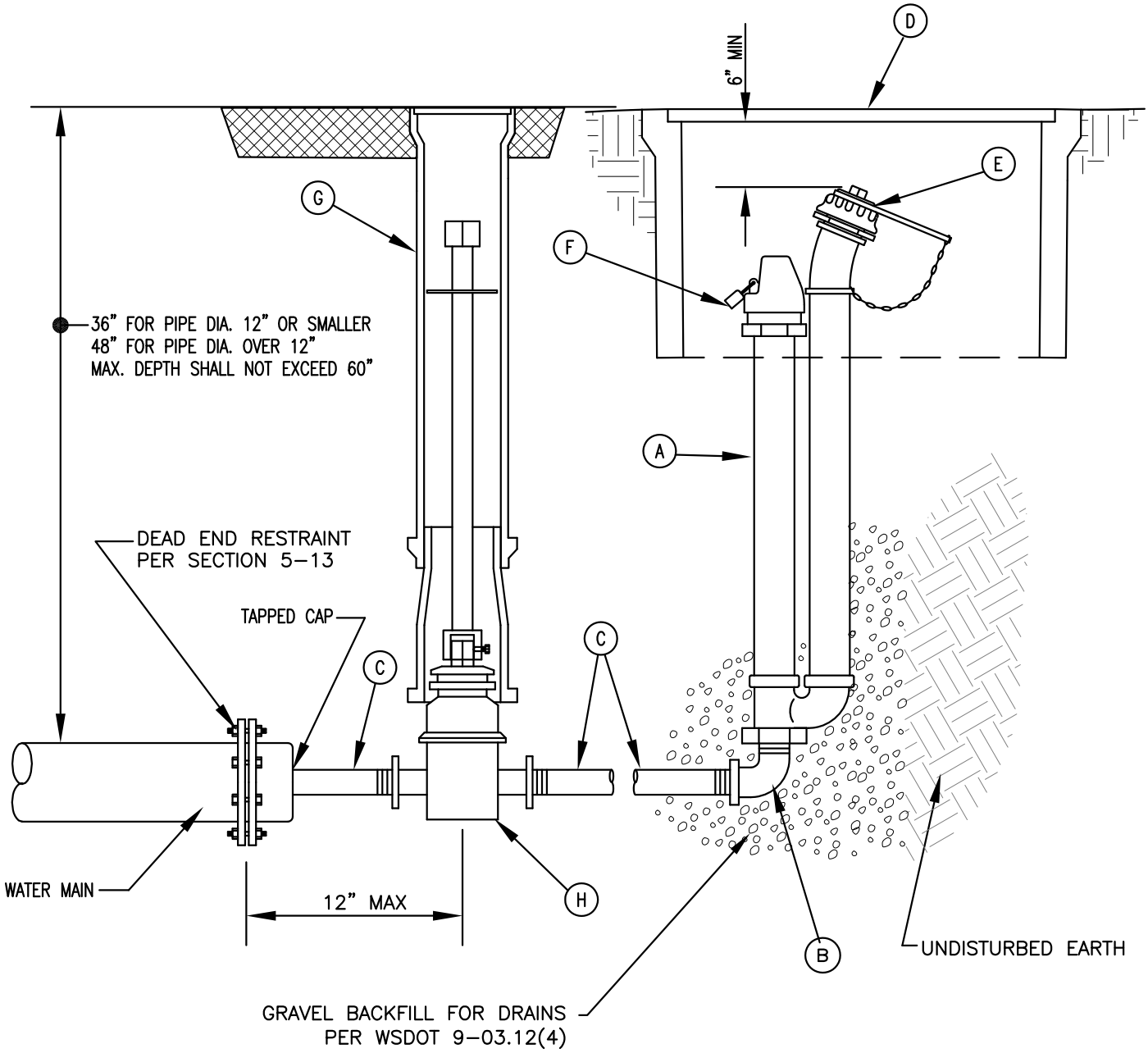

(A) LEGEND:

A. GIL # 101GHS BLOW-OFF

B. 2" BRASS STREET "L"

C. 2" BRASS NIPPLE

D. METER BOX SHALL BE: "CARSON" #BCF1730-12 OR CITY APPROVED EQUAL. DUCTILE IRON LID SHALL BE "CARSON" CBC1730-R OR CITY APPROVED EQUAL.

E 2" CAP NATIONAL STANDARD THREAD.

F LOCK TO BE SUPPLIED BY CITY OF EVERETT UTILITIES DEPARTMENT.

G VALVE BOX AND EXTENSION PER STD DWG 504

H HEAVY DUTY 2" GATE VALVE WITH RESILIENT SEAT. GATE VALVES SHALL BE "WATEROUS" SERIES 2500 OR CITY APPROVED EAUAL

CITY OF EVERETT PUBLIC WORKS DEPARTMENT	BLOW-OFF ASSEMBLY	7-31-2013 Date:
		511 COE Std Dwg:

T:\ACad\eps-coe design & constr specs for development\CURRENT\std detail dwgs\Dwg Files\STD511.dwg, 2/21/2014 1:58:13 PM

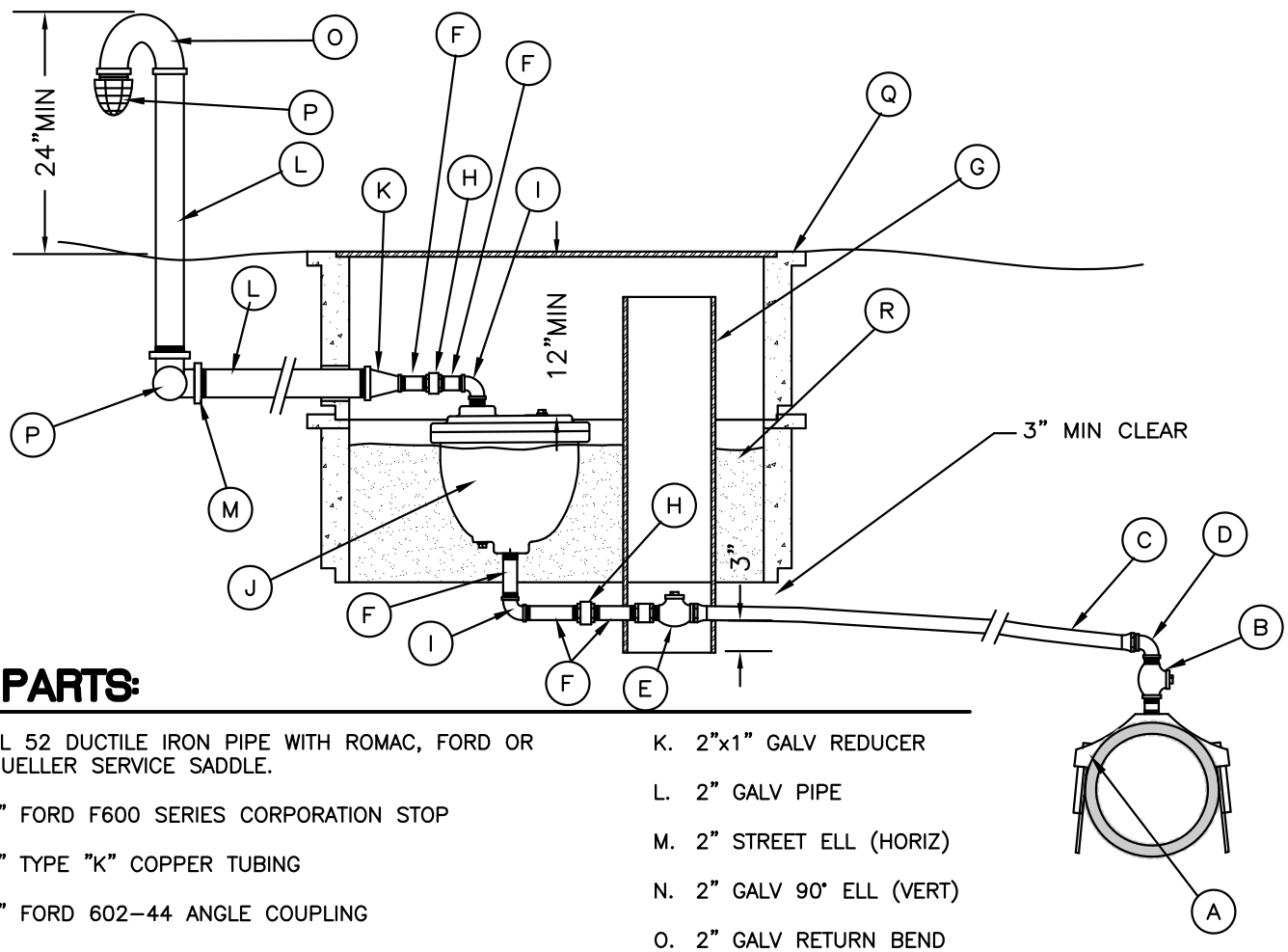

PARTS:

A. CL 52 DUCTILE IRON PIPE WITH ROMAC, FORD OR MUELLER SERVICE SADDLE.

B. 1" FORD F600 SERIES CORPORATION STOP

C. 1" TYPE "K" COPPER TUBING

D. 1" FORD 602-44 ANGLE COUPLING

E. 1" FORD B21-444 CURB STOP

F. 1" BRASS NIPPLE

G. 6" PVC PIPE

H. 1" BRASS UNION

I. 1" BRASS 90° ELL

J. 1" COMBINATION AIR AND VACUUM RELIEF VALVE APCO 143-C, VALMATIC 201C OR EQUAL

K. 2"x1" GALV REDUCER

L. 2" GALV PIPE

M. 2" STREET ELL (HORIZ)

N. 2" GALV 90° ELL (VERT)

O. 2" GALV RETURN BEND

P. GALV BEEHIVE STRAINER GREENBURG P-24-08, FOR 2" PIPE

Q. UTILITY BOX CARSON BCF1730-12 OR CITY APPROVED EQUAL.

R. BACKFILL WITH SAWDUST TO BONNET.

NOTES

1. AIR-VAC UNIT AND BOX TO BE INSTALLED IN NON-TRAFFIC AREA.
2. USE MUELLER DOUBLE STRAP SERVICE CLAMP OR APPROVED EQUAL ON ALL MAINS LESS THAN 8" IN DIAMETER.
3. ALL PIPE FITTINGS BETWEEN MAIN AND UNION, AFTER AIR/VACUUM RELIEF VALVE, SHALL BE BRASS.
4. INSTALLATIONS FOR OTHER SIZE AIR/VACUUM RELIEF VALVES SHALL BE INDIVIDUALLY DESIGNED AND WILL REQUIRE APPROVAL BY THE CITY UTILITIES DEPARTMENT.
5. PAINT METER BOX LID AND RISER ASSEMBLY (2) COATS SAFETY YELLOW, OIL BASE ENAMEL- HAND BRUSH APPLIED. STENCIL RISER ASSEMBLY WITH "AV" AND SIZE OF AIR/VAC ASSEMBLY ON SIDE FACING ROADWAY IN 2" BLACK LETTERS.
6. AIR/VAC RELEASE VALVE ASSEMBLY SHALL BE INSTALLED AT HIGH POINT ON LINE. IF HIGH POINT FALLS IN LOCATION WHERE ASSEMBLY CANNOT BE INSTALLED, PROVIDE ADDITIONAL DEPTH TO CREATE NEW HIGH POINT.
7. CONCRETE VAULT PENETRATIONS SHALL BE CORE DRILLED AND GROUTED.

CITY OF EVERETT PUBLIC WORKS DEPARTMENT	1" AIR-VACUUM VALVE ASSEMBLY	9-13-2007 Date: 512 COE Std Dwg:

T:\ACad\eps-coe design & constr specs for development\CURRENT\std detail dwgs\Dwg Files\STD512.dwg, 2/21/2014 2:13:58 PM

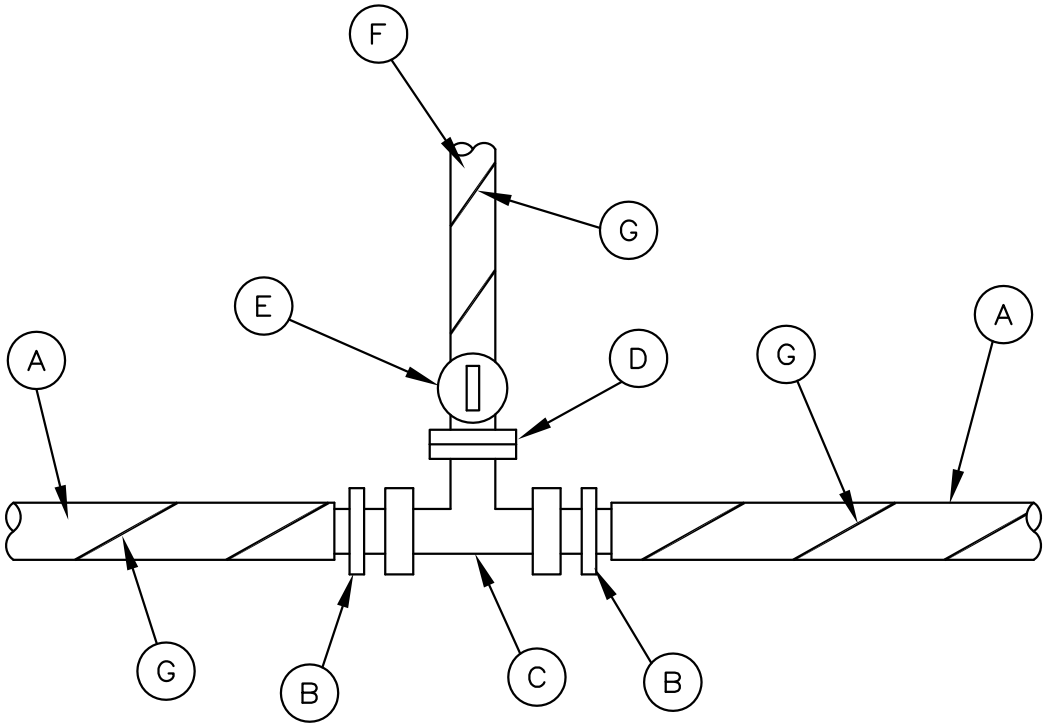

SERVICE CONNECTION PLAN

NOTES:

A. 2" WATER MAIN SHALL BE POLYETHYLENE PER STANDARD DETAIL 502B. CONNECTION TO MAIN TO BE MADE PER STANDARD DETAIL 502B.

B. 2" BRASS MALE IRON PIPE THREAD X COMPRESSION FITTING WITH STAINLESS STEEL INSERT STIFFENER. COUPLING SHALL BE "FORD" C84-77 OR CITY APPROVED EQUAL.

C. 2" BRASS TEE (FIP)

D. BRASS HEX BUSHING 2" X SERVICE SIZE.

E. CORPORATION STOP SHALL BE FORD F700 OR CITY APPROVED EQUAL.

F. METERED WATER SERVICE PER STANDARD 502A OR 502C.

G. # 10 COPPER TRACE WIRE WRAPPED ALONG ENTIRE LENGTH (ONE WRAP PER FOOT) WITH ONE END WRAPPED AROUND THE SADDLE BOLT AND SECURED BETWEEN 2 NUTS, ON MAIN CONNECTION. THE OTHER END WILL BE EXPOSED IN THE METER BOX. A SCOTCH CAST ELECTRICAL SPLICE KIT TO BE USED TO SPLICE ALL WIRES WHERE REQURED. SCOTCH CAST ELECTRICAL SPLICE KITS SHALL BE 3M INSULATION DISPLACEMENT CONNECTORS OR CITY APPROVED EQUAL.

CITY OF EVERETT PUBLIC WORKS DEPARTMENT	2" POLYETHYLENE WATER MAIN	9-13-2007 Date: 513 COE Std Dwg:

T:\ACad\eps-coe design & constr specs for development\CURRENT\std detail dwgs\Dwg Files\STD513.dwg, 2/21/2014 2:14:49 PM

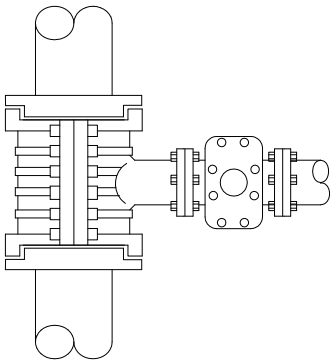

PLAN

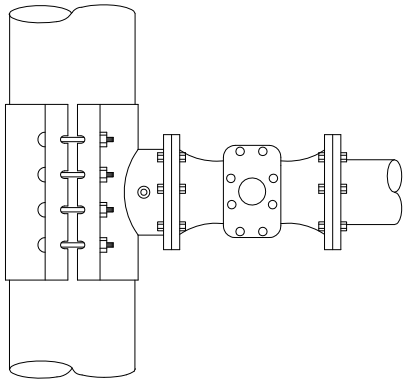

PLAN

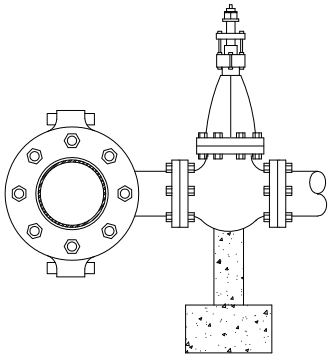

ELEVATION

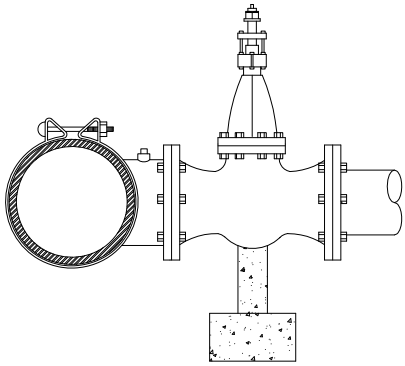

ELEVATION

INSTALLED ON ASBESTOS CEMENT PIPE, CAST IRON PIPE AND DUCTILE IRON PIPE.

CAST IRON MECHANICAL JOINT TAPPING TEE

INSTALLED ON ASBESTOS CEMENT PIPE, CAST IRON PIPE AND DUCTILE IRON PIPE.

STAINLESS STEEL TAPPING SLEEVE

NOTES:

1. STAINLESS STEEL TAPPING SLEEVES SHALL HAVE FULL CIRCLE SEAL.
2. ALL TEES AND VALVES TO BE WATER TESTED BEFORE TAP.
3. SIZE ON SIZE TAPS ALLOWED ONLY WITH MJ TAPPING TEES. ALL OTHER TAPS SHALL BE AT LEAST 2" SMALLER THAN THE EXISTING MAIN.
4. BRANCH LINE SHALL BE RESTRAINED AS IF A DEAD–END PER SECTION 5–13

EVERETT **CITY OF EVERETT PUBLIC WORKS DEPARTMENT**	TAPPING TEES	9-13-2007 Date: 514 COE Std Dwg:

T:\ACad\eps-coe design & constr specs for development\CURRENT\std detail dwgs\Dwg Files\STD514.dwg, 2/21/2014 2:15:44 PM

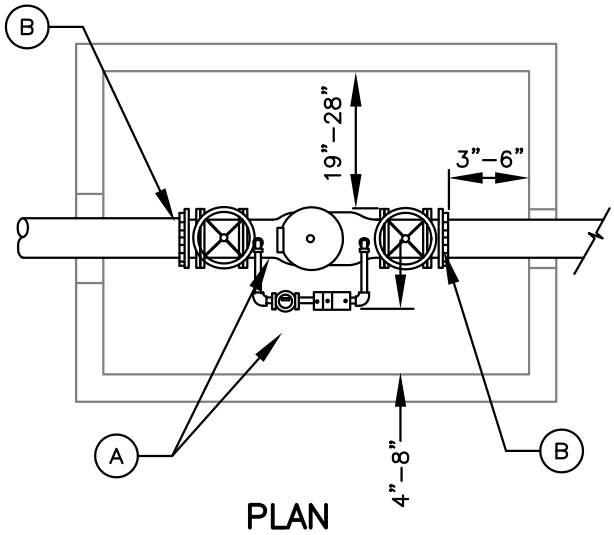

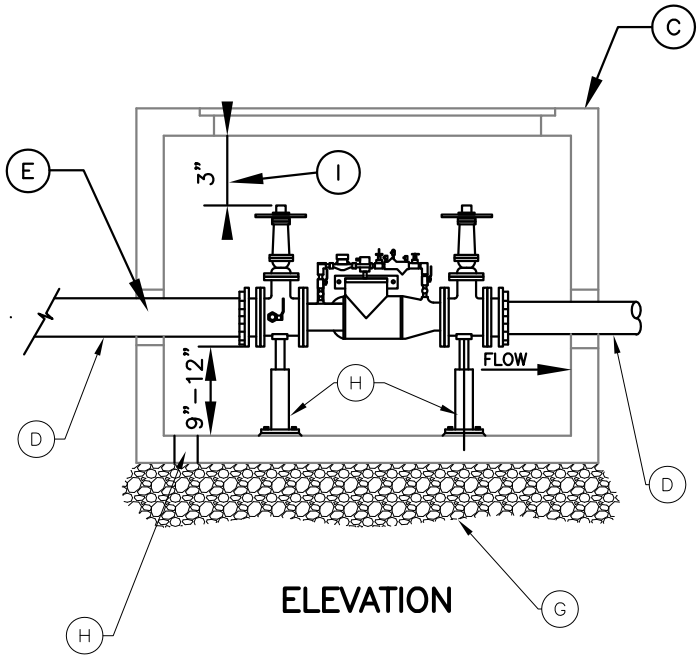

(X) PARTS:

A. UL–FM LISTED SOFTSEATED WA STATE APPROVED DOUBLE CHECK DETECTOR VALVE ASSEMBLY INCLUDING 2–O.S.&Y RESILIENT SEATED GATE VALVES, TEST COCKS, 3/4" BRASS OR COPPER BYPASS WITH INLINE VALVES, 5/8" X 3/4" NEPTUNE METER W/E–CODER R900 I, CU FT W/STUB ANTENNA & A 3/4" DOUBLE CHECK VALVE ASSEMBLY.

B. UNI–FLANGE WITH SET SCREWS OR MJ x FL ADAPTER WITH MEGALUG.

C. PRE CAST CONCRETE VAULT WITH STEEL ACCESS HATCH (AS MANUFACTURED BY UTILITY VAULT CO OR APPROVED EQUAL). PROVIDE OSHA APPROVED HOT DIPPED GALVANIZED STEEL LADDER INSTALLED IN SUCH A WAY THAT VAULT ACCESS DOES NOT INTERFERE WITH INSTALLED EQUIPMENT MAINTENANCE. PROVIDE NON–SLIP SURFACE ON ACCESS HATCH IF VAULT LOCATED IN PEDESTRIAN WALKWAY.

D. DUCTILE IRON PIPE (SIZED AS REQUIRED) CLASS 52.

E. VAULT PENETRATIONS SHALL BE SEALED WITH WATER TIGHT GROUT, LINK–SEAL WALL SLEEVE OR APPROVED EQUAL.

F. TWO (2) GALVANIZED ADJUSTABLE PIPE SUPPORTS FOR 2–1/2" DIAMETER AND LARGER PIPE.

G. MINIMUM 6" COARSE AGGREGATE AASHTO GRADING NO.4 PER WSDOT 9–03.1(4)C.

H. 6" FLOOR OPENING FOR DRAINAGE.

I. 3" MIN. CLEARANCE FROM UNDERSIDE OF VAULT LID TO STEM OF OS&Y WHEN FULLY OPEN.

NOTES:

1. TEE AND GATE VALVE REQUIRED ON MAIN.
2. SINGLE DETECTOR CHECKS ARE NOT APPROVED BACKFLOW PREVENTION DEVICES.
3. ASSEMBLY REQUIRES CERTIFICATION UPON INSTALLATION AND RECERTIFICATION ANNUALLY BY OWNER.
4. ALL TEST COCKS MUST HAVE BRASS PLUGS.
5. ROUND MANHOLE LIDS ARE NOT TO BE USED.
6. INSIDE DEPTH IS TO BE KEPT AT A MINIMUM AS PER DIMENSION IN SKETCHES ABOVE AND/OR AS APPROVED BY CITY OF EVERETT UTILITIES DEPARTMENT.
7. METER SHALL BE INSTALLED SUCH THAT IT CAN BE READ WITH ACCESS HATCH OPEN AND WITHOUT ENTERING THE VAULT.
8. ALL DIMENSIONS ARE MINIMUM CLEARANCE
9. ALL BACKFLOW DEVICES WILL BE INSTALLED IN A VAULT OUTSIDE THE BUILDING UNLESS OTHERWISE APPROVED BY UTILITIES SUPERINTENDENT.

EVERETT **CITY OF EVERETT** **PUBLIC WORKS DEPARTMENT**	DOUBLE CHECK DETECTOR VALVE ASSEMBLY (DCDA) 3" AND LARGER SERVICE	1-27-2015 Date:
		515 COE Std Dwg:

T:\ACad\EPS-COE Design & Constr Specs for Development\CURRENT\STD DETAIL DWGS\Dwg Files\STD516.dwg, 1, 8/25/2014 8:22:27 AM

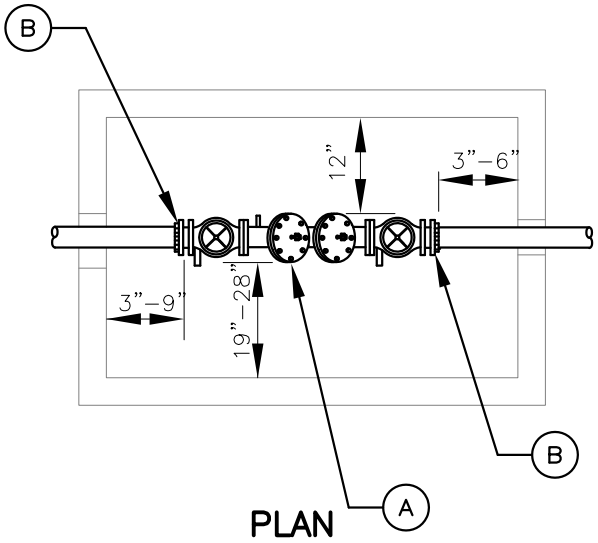

PLAN

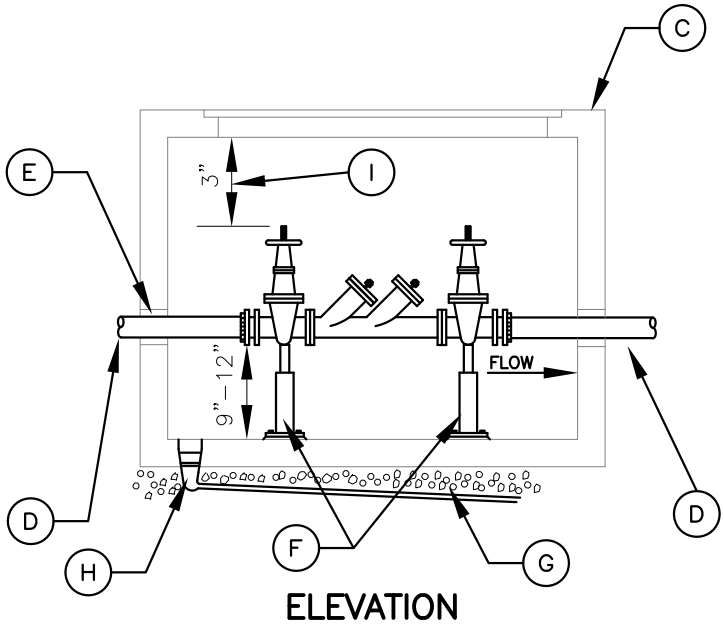

ELEVATION

(A) PARTS:

A. UL–FM LISTED SOFTSEATED WA STATE APPROVED DOUBLE CHECK VALVE ASSEMBLY INCLUDING: 2–O.S.& Y RESILIENT SEATED GATE VALVES, AND TEST COCKS.

B. UNI–FLANGE WITH SET SCREWS OR MJ x FL ADAPTER WITH MEGALUG.

C. PRECAST CONCRETE VAULT WITH STEEL ACCESS HATCH (AS MANUFACTURED BY UTILITY VAULT CO OR AN APPROVED EQUAL). PROVIDE OSHA APPROVED HOT DIPPED GALVANIZED STEEL LADDER. INSTALL LADDER IN SUCH A WAY AS TO PROVIDE VAULT ACCESS THAT DOES NOT INTERFERE WITH INSTALLED EQUIPMENT OR MAINTENANCE THEREOF. PROVIDE NON–SLIP SURFACE ON ACCESS HATCH IF VAULT LOCATED IN PEDESTRIAN WALKWAY.

D. DUCTILE IRON PIPE (SIZED AS REQUIRED) CLASS 52.

E. WATER TIGHT GROUT SHALL BE USED IN ALL VAULT PENETRATIONS.

F. 2 – GALVANIZED ADJUSTABLE PIPE SUPPORTS FOR 2 1/2" DIA. AND LARGER PIPE.

G. GRAVEL FOUNDATION AS REQUIRED.

H. 6" PVC OR EQUAL DRAIN, SLOPE TO DAYLIGHT OR CONNECT TO STORM DRAIN SYSTEM.

I. 3" MIN CLEARANCE FROM UNDERSIDE OF VAULT LID TO STEM OF OS&Y WHEN FULLY OPEN.

NOTES:

1. TEE AND GATE VALVE REQUIRED ON MAIN.
2. SINGLE DETECTOR CHECKS ARE NOT APPROVED BACKFLOW PREVENTION DEVICES.
3. ASSEMBLY REQUIRES CERTIFICATION UPON INSTALLATION AND RECERTIFICATION ANNUALLY BY OWNER.
4. ALL TEST COCKS MUST HAVE BRASS PLUGS.
5. MAXIMUM HEIGHT OF ASSEMBLY IS FIVE FEET UNLESS AN OSHA APPROVED PLATFORM IS PROVIDED.
6. INSIDE DEPTH IS TO BE KEPT AT A MINIMUM AS PER DIMENSION IN SKETCHES ABOVE AND/OR AS APPROVED BY CITY OF EVERETT UTILITIES DEPARTMENT.
7. METER SHALL BE INSTALLED SUCH THAT IT CAN BE READ WITHOUT ENTERING VAULT WITH ACCESS HATCH OPEN AND WITHOUT ENTERING THE VAULT.
8. ALL DIMENSIONS ARE MIN CLEARANCE REQUIREMENTS.

EVERETT **CITY OF EVERETT PUBLIC WORKS DEPARTMENT**	DOUBLE CHECK VALVE ASSEMBLY (DCVA) 3" AND LARGER SERVICE	8-25-2014 Date:
		516 COE Std Dwg:

T:\ACad\EPS-COE Design & Constr Specs for Development\CURRENT\STD DETAIL DWGS\Dwg Files\STD517.dwg, 1, 8/25/2014 8:25:25 AM

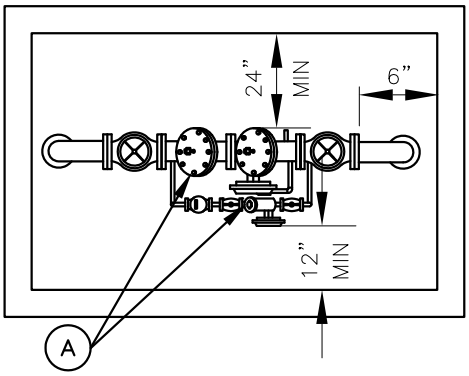

PLAN

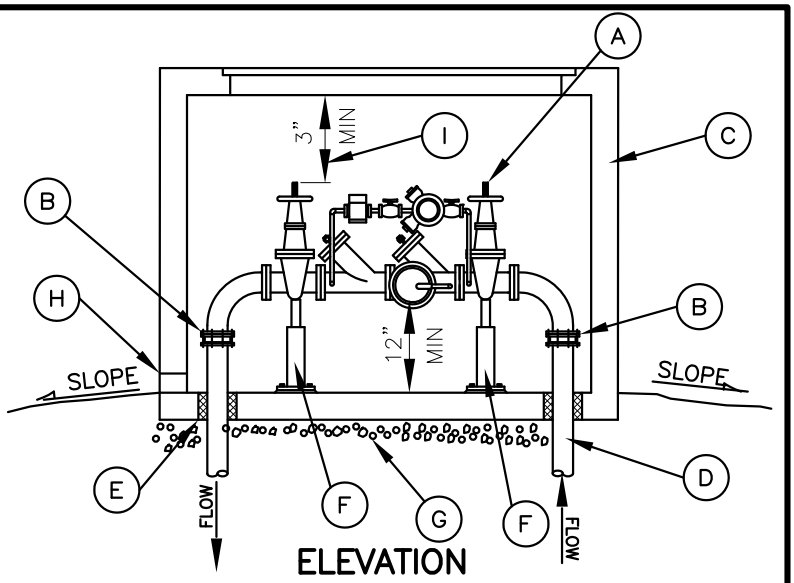

ELEVATION

PARTS:

A. UL–FM LISTED SOFTSEATED WA STATE APPROVED REDUCED PRESSURE DETECTOR ASSEMBLY INCLUDING: 2–O.S.& Y RESILIENT SEATED GATE VALVES, TEST COCKS, 3/4" BRASS OR COPPER BYPASS WITH IN LINE VALVES, 5/8" METER (METER TO READ IN CUBIC FEET), AND A 3/4" REDUCED PRESSURE BACKFLOW ASSEMBLY.

B. UNI–FLANGE WITH SET SCREWS OR MJ x FL ADAPTOR WITH MEGALUG OR GALVANIZED SHACKLE TO MAIN WITH 2–3/4" RODS, OR MJ RETAINER GLANDS.

C. PRECAST CONCRETE ENCLOSURE WITH STEEL ACCESS HATCH (AS MANUFACTURED BY UTILITY VAULT CO OR AN APPROVED EQUAL). ABOVE GROUND INSTALLATIONS WILL: BE PROVIDED WITH 6'–6'x36" STEEL DOOR FOR ACCESS, THE EXTERIOR WILL BE PAINTED WITH AN APPROVED PAINT, PROVIDED WITH SUFFICIENT INSULATION TO PREVENT FREEZING AND SITE WILL BE PROVIDED WITH A 6' HIGH SECURITY FENCE WITH PEDESTRIAN AND VEHICLE GATES. SEMI–BURIED INSTALLATIONS WILL: BE PROVIDED WITH OSHA APPROVED LADDER. INSTALLED IN SUCH A WAY AS TO NOT INTERFERE WITH INSTALLED EQUIPMENT MAINTENANCE. PROVIDE NON–SLIP SURFACE ON ACCESS HATCH IF VAULT LOCATED IN PEDESTRIAN WALKWAY.

D. DUCTILE IRON PIPE (SIZED AS REQUIRED) CLASS 52.

E. WATER TIGHT GROUT SHALL BE USED IN ALL VAULT PENETRATIONS.

F. 2 – GALVANIZED ADJUSTABLE PIPE SUPPORTS FOR 2 1/2" DIA AND LARGER PIPE.

G. GRAVEL FOUNDATION AS REQUIRED.

H. DRAIN SHALL BE INSTALLED WITH APPROVED AIR GAP (SEE STD 519) AND BE ABLE TO BE BORE SIGHTED TO DAYLIGHT WHICH MUST BE ABOVE 100 YEAR FLOOD LEVEL. DRAIN WILL BE SIZED SO AS TO PROVIDE FREE GRAVITY DRAINAGE OF MAX DISCHARGE OF RELIEF VALVE PORT.

I. 3" MIN CLEARANCE FROM UNDERSIDE OF VAULT LID TO STEM OF OS&Y WHEN FULLY OPEN.

NOTES

1. TEE AND GATE VALVE REQUIRED ON MAIN.
2. ALL TEST COCKS MUST HAVE BRASS PLUGS.
3. MAXIMUM HEIGHT OF ASSEMBLY IS FIVE FEET UNLESS AN OSHA APPROVED PLATFORM IS PROVIDED.
4. MINIMUM INSIDE VAULT HEIGHT IS 78", OR AS APPROVED BY THE CITY UTILITIES DEPARTMENT.
5. METER SHALL BE INSTALLED SUCH THAT IT CAN BE READ WITHOUT ENTERING VAULT WITH ACCESS HATCH OPEN AND WITHOUT ENTERING THE VAULT.
6. ALL DIMENSIONS ARE MINIMUM CLEARANCE REQUIREMENTS.
7. ASSEMBLY REQUIRES CERTIFICATION UPON INSTALLATION AND RECERTIFICATION ANNUALLY BY OWNER.

EVERETT **CITY OF EVERETT** **PUBLIC WORKS DEPARTMENT**	REDUCED PRESSURE DETECTOR ASSEMBLY (RPDA) ALL SIZES	8-25-2014 Date: 517 COE Std Dwg:

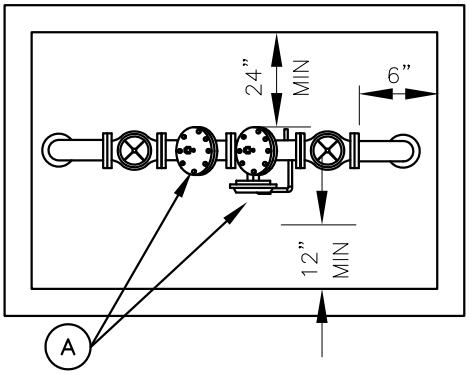

PLAN

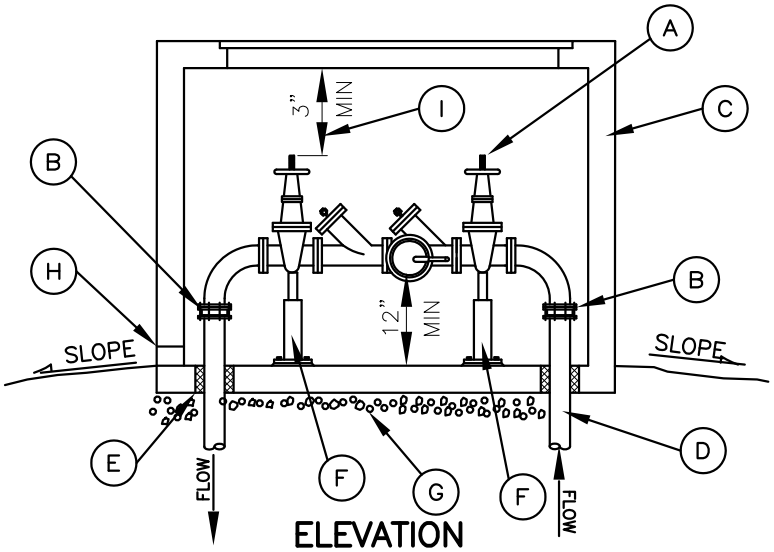

ELEVATION

PARTS:

A. UL–FM LISTED SOFTSEATED WA STATE APPROVED REDUCED PRESSURE BACKFLOW ASSEMBLY INCLUDING: 2–O.S.& Y RESILIENT SEATED GATE VALVES, AND TEST COCKS.

B. UNI–FLANGE WITH SET SCREWS OR MJ x FL ADAPTOR WITH MEGALUG OR GALVANIZED SHACKLE TO MAIN WITH 2–3/4" RODS, OR MJ RETAINER GLANDS.

C. PRECAST CONCRETE ENCLOSURE WITH STEEL ACCESS HATCH (AS MANUFACTURED BY UTILITY VAULT CO OR AN APPROVED EQUAL). ABOVE GROUND INSTALLATIONS WILL: BE PROVIDED WITH 6'–6'x36" STEEL DOOR FOR ACCESS, THE EXTERIOR WILL BE PAINTED WITH AN APPROVED PAINT, PROVIDED WITH SUFFICIENT INSULATION TO PREVENT FREEZING AND SITE WILL BE PROVIDED WITH A 6' HIGH SECURITY FENCE WITH PEDESTRIAN AND VEHICLE GATES. SEMI–BURIED INSTALLATIONS WILL: BE PROVIDED WITH OSHA APPROVED LADDER. INSTALLED IN SUCH A WAY AS TO NOT INTERFERE WITH INSTALLED EQUIPMENT MAINTENANCE.

D. DUCTILE IRON PIPE (SIZED AS REQUIRED) CLASS 52.

E. WATER TIGHT GROUT SHALL BE USED IN ALL VAULT PENETRATIONS.

F. 2 – GALVANIZED ADJUSTABLE PIPE SUPPORTS FOR 2 1/2" DIA AND LARGER PIPE.

G. GRAVEL FOUNDATION AS REQUIRED.

H. DRAIN SHALL BE INSTALLED WITH APPROVED AIR GAP (SEE STD 519) AND BE ABLE TO BE BORE SIGHTED TO DAYLIGHT WHICH MUST BE ABOVE 100 YEAR FLOOD LEVEL. DRAIN WILL BE SIZED SO AS TO PROVIDE FREE GRAVITY DRAINAGE OF MAX DISCHARGE OF RELIEF VALVE PORT.

I. 3" MIN CLEARANCE FROM UNDERSIDE OF VAULT LID TO STEM OF OS&Y WHEN FULLY OPEN.

NOTES

1. TEE AND GATE VALVE REQUIRED ON MAIN.
2. ALL TEST COCKS MUST HAVE BRASS PLUGS.
3. MAXIMUM HEIGHT OF ASSEMBLY IS FIVE FEET UNLESS AN OSHA APPROVED PLATFORM IS PROVIDED.
4. MINIMUM INSIDE VAULT HEIGHT IS 78", OR AS APPROVED BY THE CITY UTILITIES DEPARTMENT.
5. METER SHALL BE INSTALLED SUCH THAT IT CAN BE READ WITHOUT ENTERING VAULT WITH ACCESS HATCH OPEN AND WITHOUT ENTERING THE VAULT.
6. ALL DIMENSIONS ARE MINIMUM CLEARANCE REQUIREMENTS.
7. ASSEMBLY REQUIRES CERTIFICATION UPON INSTALLATION AND RECERTIFICATION ANNUALLY BY OWNER.

EVERETT **CITY OF EVERETT** **PUBLIC WORKS DEPARTMENT**	REDUCED PRESSURE BACKFLOW ASSEMBLY (RPBA) ALL SIZES	9-13-2007 Date: 518 COE Std Dwg:

T:\ACad\eps-coe design & constr specs for development\CURRENT\std detail dwgs\Dwg Files\STD518.dwg, 2/21/2014 2:19:15 PM

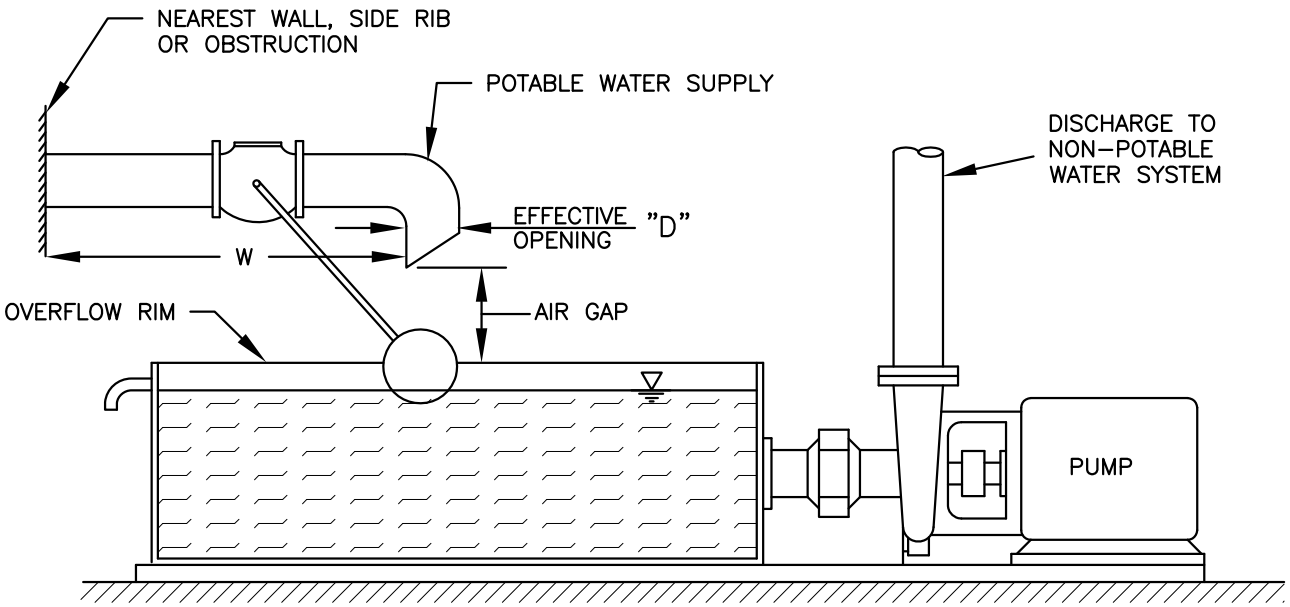

NOTES:

1. ALL INSTALLED AIR GAPS MUST BE WA DOH APPROVED.
2. THE HEIGHT OF THE AIR GAP MUST MEET THE CRITERIA IN TABLE A UNLESS OTHERWISE NOTED.
3. THE CITY UTILITIES DEPARTMENT MAY REQUIRE THE AIR GAP TO BE INCREASED IF INSTALLED WITHIN A BUILDING WHERE THE AIR PRESSURE IS ARTIFICIALLY MAINTAINED OR INCREASED.
4. AIR GAPS LESS THAN 1 INCH SHALL BE APPROVED ONLY AS A PART OF A LISTED DEVICE THAT HAS BEEN TESTED UNDER BACKSIPHONAGE CONDITIONS WITHIN A VACUUM OF A MINIMUM OF 25 INCHES OF MERCURY.
5. TUBULAR SCREENS MAY BE ATTACHED OR THE SUPPLY LINE OUTLET MAY BE CUT AT A 45° ANGLE.
6. HOSES AND BYPASSES ARE NOT ALLOWED.
7. THE INSPECTION OF AIR GAPS SHALL BE INCLUDED IN THE YEARLY TESTING PROGRAM FOR BACKFLOW DEVICES.

TABLE A

D	AIR GAP (INCHES)	
	IF W > 3D	IF W ≤ 3D (SINGLE WALL) OR IF W ≤ 4D (INTERSECTING WALLS)
< 0.5 INCH	1	1.5
< 0.75 INCH	1.5	2.25
≥ 1 INCH	2 X D	3 X D

CITY OF EVERETT
PUBLIC WORKS DEPARTMENT

AIR GAP FOR MAKEUP TANK

9-13-2007
Date:

519
COE Std Dwg:

T:\ACad\eps-coe design & constr specs for development\CURRENT\std detail dwgs\Dwg Files\STD519.dwg, 2/21/2014 2:20:04 PM

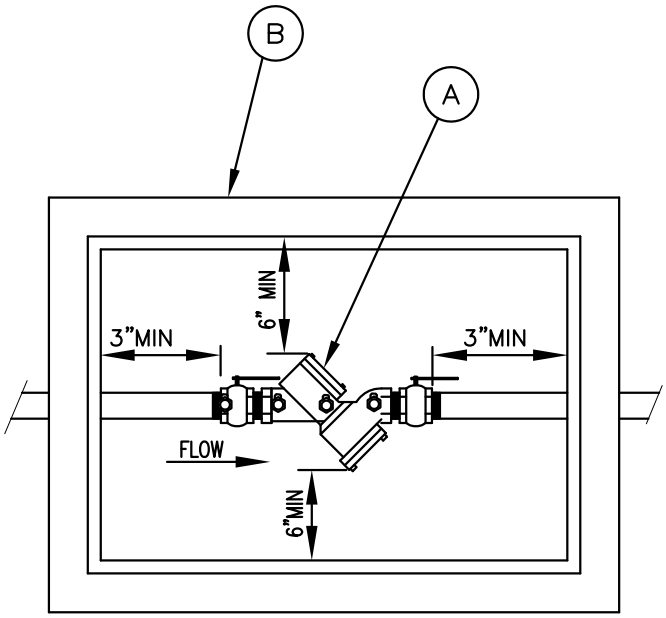

PLAN

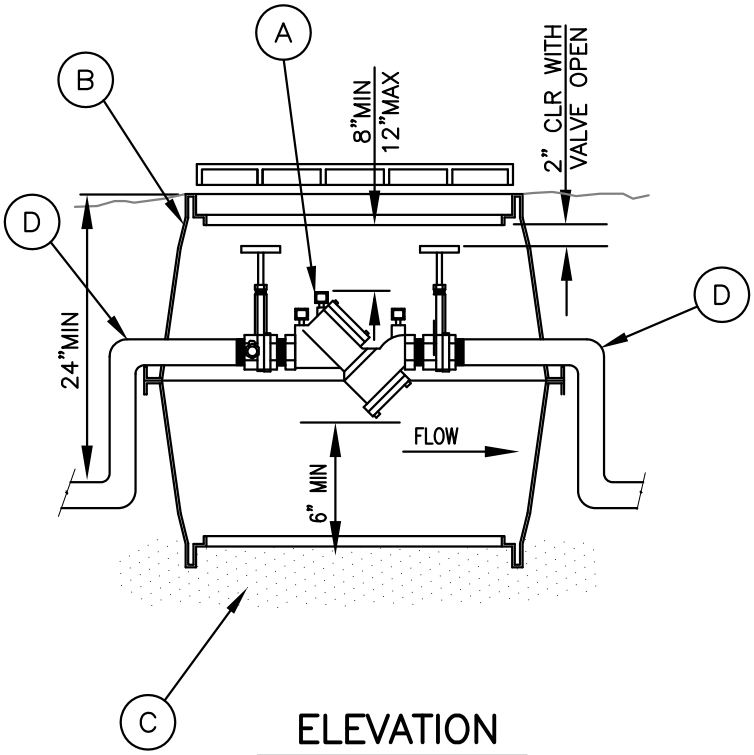

ELEVATION

PARTS:

A. WA STATE APPROVED DOUBLE CHECK VALVE ASSEMBLY.

B. IN NON–TRAFFIC AREAS USE:
PRECAST CONCRETE VAULT (UTILITY VAULT CO 233–LA, OR APPROVED EQUAL) OR PLASTIC VALVE BOX (UTILITY VAULT CO 1324–12L OR APPROVED EQUAL)
IN TRAFFIC AREAS:
A TRAFFIC LOADED BOX MUST BE USED AND LOCATION APPROVED BY THE THE CITY OF EVERETT PRIOR TO INSTALLATION.

C. IF A DAYLIGHT DRAIN CANNOT BE PROVIDED THERE MUST BE A 4" MIN LAYER OF FREE DRAINING GRAVEL AT THE BOTTOM OF BOX.

D. ANGLES MAY BE IN OR OUT OF BOX SO LONG AS SUFFICIENT ROOM IS ALLOWED AT EACH END FOR VALVE OPERATOR AND DCVA REPAIR OR MAINTENANCE.

NOTES

1. ALL TEST COCKS MUST HAVE BRASS PLUGS.
2. TEST COCKS MUST FACE UP OR SIDEWAYS WHICH EVER IS MORE ACCESSIBLE.
3. PROVIDE NON–SLIP SURFACE ON ACCESS HATCH IF VAULT IS LOCATED IN PEDESTRIAN WALKWAY.

CITY OF EVERETT PUBLIC WORKS DEPARTMENT	DOUBLE CHECK VALVE ASSEMBLY (DCVA) FOR 2 1/2" AND SMALLER SERVICE	7-28-2014 Date: 520 COE Std Dwg:

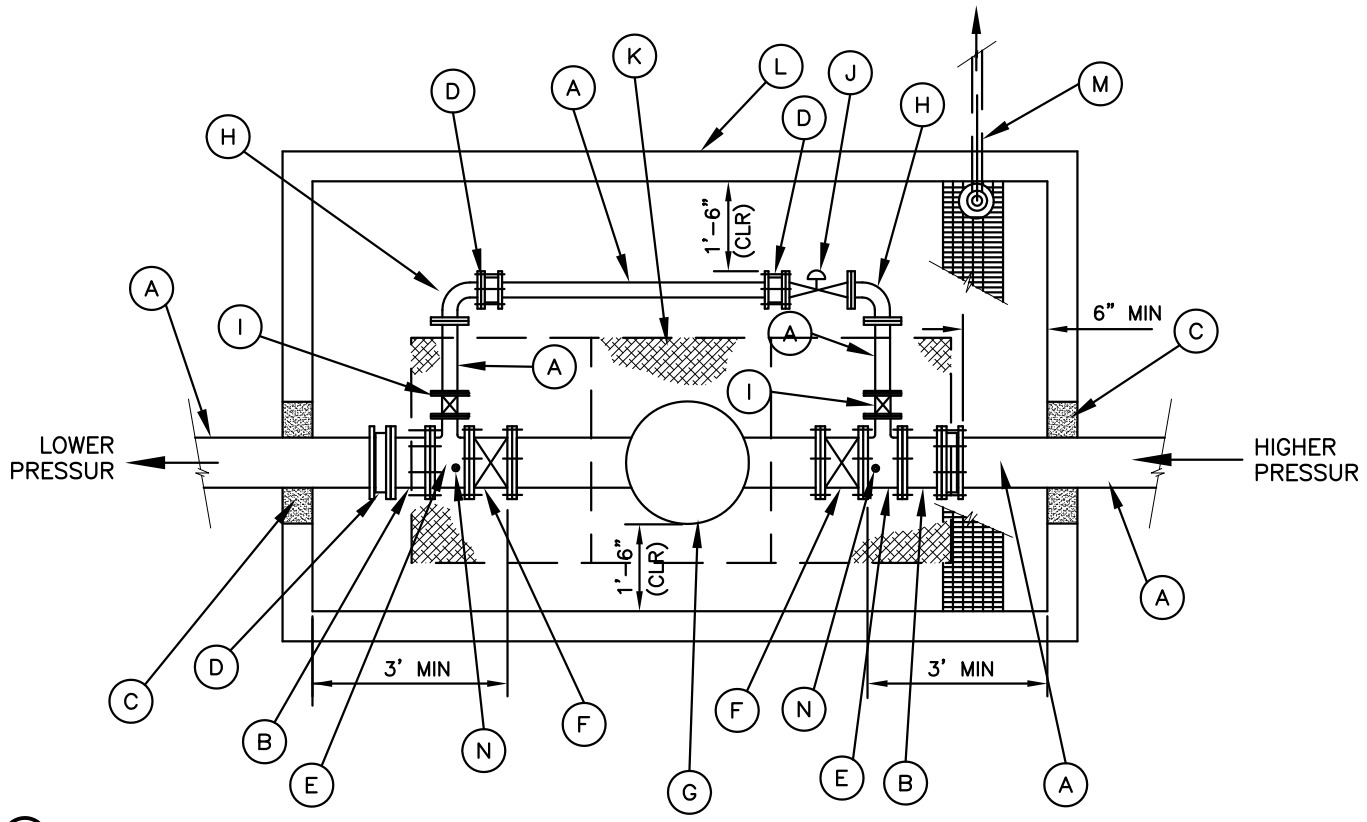

PARTS:

A. DUCTILE IRON PIPE

B. SPOOL (FLxFL) IF NEEDED

C. NON-SHRINK GROUT

D. FLANGE COUPLING ADAPTOR (FLxMJ)

E. TEE (FL)

F. GV CL 200 (FLxFL)

G. PRV (FLxFL) FLANGE COUPLING ADAPTOR

H. 90° ELL (ALL MJ W/MEGA LUGS)

I. GV (FLxFL)

J. PRV (FLxFL)

K. UTILITY VAULT CO LID WITH TRAFFIC LOADED LOCKING STEEL COVERS OR EQUAL.

L. UTILITY VAULT CO PRECAST VAULT.

M. 2" GRAVITY SUMP DRAIN EXTEND TO DAY-LIGHT OR TO STORM DRAINAGE SYSTEM.

N. 1/4" GAUGE TAPS WITH 1/4" BALL VALVES FOR ISOLATION.

NOTES

1. MINIMUM VAULT INSIDE HEIGHT SHALL BE 78", OR AS APPROVED BY THE CITY UTILITIES DEPARTMENT.
2. MINIMUM CLEARANCE BETWEEN PRV VALVES AND FLOOR SHALL BE 12".
3. PROVIDE LIQUID FILLED 2 1/2" PRESSURE GAUGES AMETEK SERIES 550L OR CITY APPROVED EQUAL.
4. ALL EQUIPMENT MUST BE RATED FOR SOURCE PRESSURE.
5. PIPING AND VALVES SHALL BE SUPPORTED BY POURED-IN-PLACE CONCRETE OR STEEL STANDS. NUMBER OF AND PLACEMENT OF STANDS TO BE DETERMINED BY CITY UTILITIES DEPARTMENT ACCORDING TO VALVE SIZE.
6. BRAND, SIZE, MINIMUM CLEARANCES, TYPE OF PRV AND ACCESSORIES TO BE DETERMINED BY CITY OF EVERETT UTILITIES DEPARTMENT.
7. PROVIDE NON-SLIP SURFACE ON ACCESS HATCH IF VAULT IS LOCATED IN PEDESTRIAN WALKWAY.

CITY OF EVERETT PUBLIC WORKS DEPARTMENT	TYPICAL PRV INSTALLATION	7-28-2014 Date: 521 COE Std Dwg:

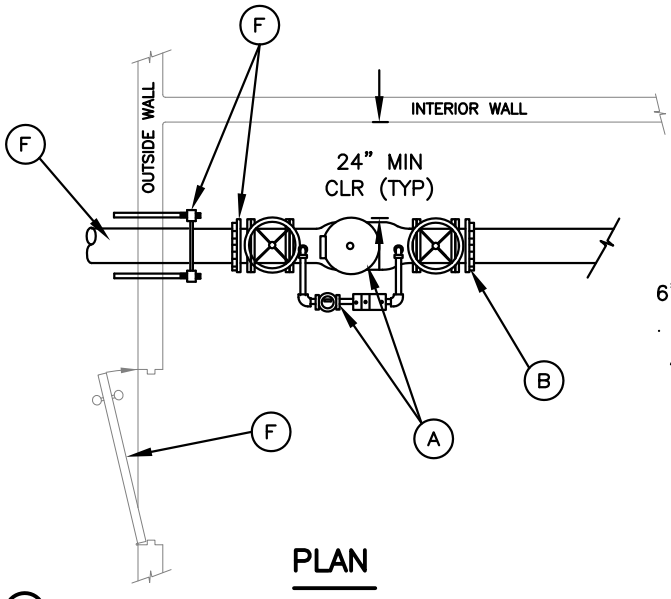

PLAN

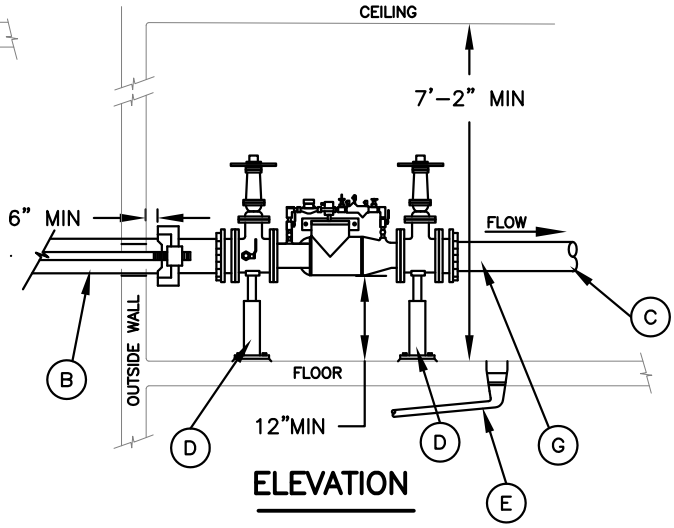

ELEVATION

(A) PARTS:

A. UL-FM LISTED SOFT SEATED WA STATE APPROVED DOUBLE CHECK DETECTOR VALVE ASSEMBLY WHICH MUST BE INSTALLED IN THE SAME ORIENTATION FOR WHICH IT WAS APPROVED. ASSEMBLY TO INCLUDE; TEST COCKS, 3/4" BRASS OR COPPER BYPASS WITH IN-LINE VALVES AND A 5/8" REMOTE METER. METER TO READ IN CUBIC FEET, AND BE REMOTED TO AN EXTERNAL WALL OF BUILDING METER BOX.

B. UNI-FLANGE WITH SET SCREWS OR MJ x FL ADAPTER WITH MEGALUG RESTRAINT FOR BOTH UPSTREAM AND DOWNSTREAM OF ASSEMBLY.

C. DUCTILE IRON PIPE (SIZED AS REQUIRED) CLASS 52.

D. TWO GALVANIZED ADJUSTABLE PIPE SUPPORTS FOR 2 1/2" DIA AND LARGER PIPE.

E. A SUFFICIENTLY SIZED FLOOR DRAIN OR WALL FOOTING DRAIN MUST BE PROVIDED IN THE SAME ROOM. DRAIN TO SLOPE TO DAYLIGHT OR CONNECT TO STORM DRAIN SYSTEM.

F. EXTERNAL DOOR WITH KEY IS REQUIRED. EITHER A LOCKSET IN THE DOOR HARDWARE OR A KEY VAULT (I.E. SUPRA S.S.) WITH A 1 5/8" DIAMETER X 1 1/8" LENGTH MORTISE CYLINDER. MORTISE CYLINDER MUST ACCEPT THE CITY STANDARD "BEST" LOCKING SYSTEM. THE WIDTH AND HEIGHT OF THE DOOR(S) MUST EXCEED THE WIDTH AND HEIGHT OF THE ASSEMBLY. CLEARANCE BOTH INSIDE AND OUTSIDE ROOM MUST BE SUFFICIENT TO REMOVE ASSEMBLY INTACT. THE ASSEMBLY MUST BE FULLY ACCESSIBLE (2FT MIN HORIZONTAL CLEARANCE TO ALL WALLS AND OR EQUIPMENT) FOR TESTING AND REPAIRS.

G. FLUSHING CAPABILITIES MUST BE PROVIDED WITH A 2" FLUSHING LINE DOWNSTREAM OF ASSEMBLY TO OUTSIDE OR SUFFICIENTLY SIZED INTERNAL DRAIN.

H. WHERE ASSEMBLY IS TO BE LOCATED ABOVE EXTERNAL GROUND LEVEL, ALL BENDS REQUIRED TO LOWER INLET PIPE TO PROVIDE REQUIRED EXTERNAL GROUND COVER SHALL BE FLANGE FITTINGS OR BE FITTED WITH HORIZONTAL AND VERTICAL THRUST RESTRAINTS.

I. THE ROOM SHOULD BE INSULATED WITH R-19 INSULATION OR GREATER AND HEATED TO ABOVE FREEZING. ONLY CONSTRUCTION MATERIALS THAT CAN WITHSTAND OCCASIONAL SUBMERGENCE WILL BE ALLOWED.

GENERAL NOTES

1. TEE AND GATE VALVE REQUIRED ON MAIN.
2. SINGLE DETECTOR CHECKS ARE NOT APPROVED BACKFLOW PREVENTION DEVICES.
3. ASSEMBLY REQUIRES CERTIFICATION UPON INSTALLATION, AND RECERTIFICATION ANNUALLY BY OWNER.
4. ALL TEST COCKS MUST HAVE BRASS PLUGS.
5. MAXIMUM HEIGHT OF ASSEMBLY FROM FLOOR IS FIVE FEET UNLESS AN OSHA APPROVED PLATFORM IS PROVIDED.
6. ALL DIMENSIONS ARE MINIMUM CLEARANCE REQUIREMENTS.
7. FIRE DEPARTMENT PUMPER CONNECTION MUST BE DOWNSTREAM OF ASSEMBLY.
8. THE OSY VALVE CAN NOT BE USED AS A POST INDICATOR VALVE. (THESE ARE ONLY PART OF THE BACKFLOW ASSY.)

EVERETT **CITY OF EVERETT PUBLIC WORKS DEPARTMENT**	DOUBLE CHECK DETECTOR VALVE ASSEMBLY (DCDA) 3" AND LARGER SERVICE INSIDE A BUILDING	9-13-2007 Date: 523 COE Std Dwg:

T:\ACad\eps-coe design & constr specs for development\CURRENT\std detail dwgs\Dwg Files\STD523.dwg, 2/21/2014 2:22:58 PM

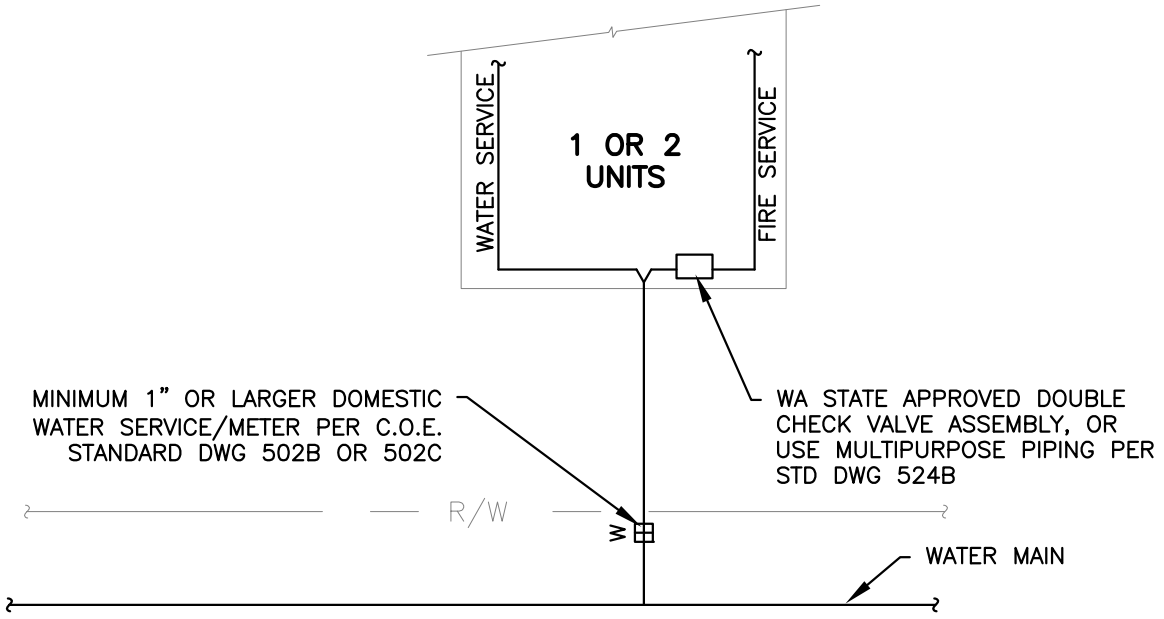

IRC DEFINED SINGLE FAMILY, DUPLEX OR TOWNHOUSE STRUCTURES THAT ARE REQUIRED TO OR OPT TO HAVE A FIRE SPRINKLER SYSTEM MAY USE A SINGLE DOMESTIC WATER METER PER COE STD DWG 502B OR 502C. THE SIZE OF THE SERVICE METER SHALL BE CALCULATED BY THE CIVIL ENGINEER OR FIRE SPRINKLER DESIGNER, WHO IS SOLELY RESPONSIBLE FOR THESE CALCULATIONS. THE FIRE SERVICE SIDE OF THE SYSTEM MUST HAVE A WA STATE APPROVED BACKFLOW PREVENTION DEVICE, OR BE INSTALLED PER STD DWG 524B. SYSTEMS INSTALLED IN THIS CONFIGURATION SHALL BE IN ACCORDANCE WITH NFPA 13D.

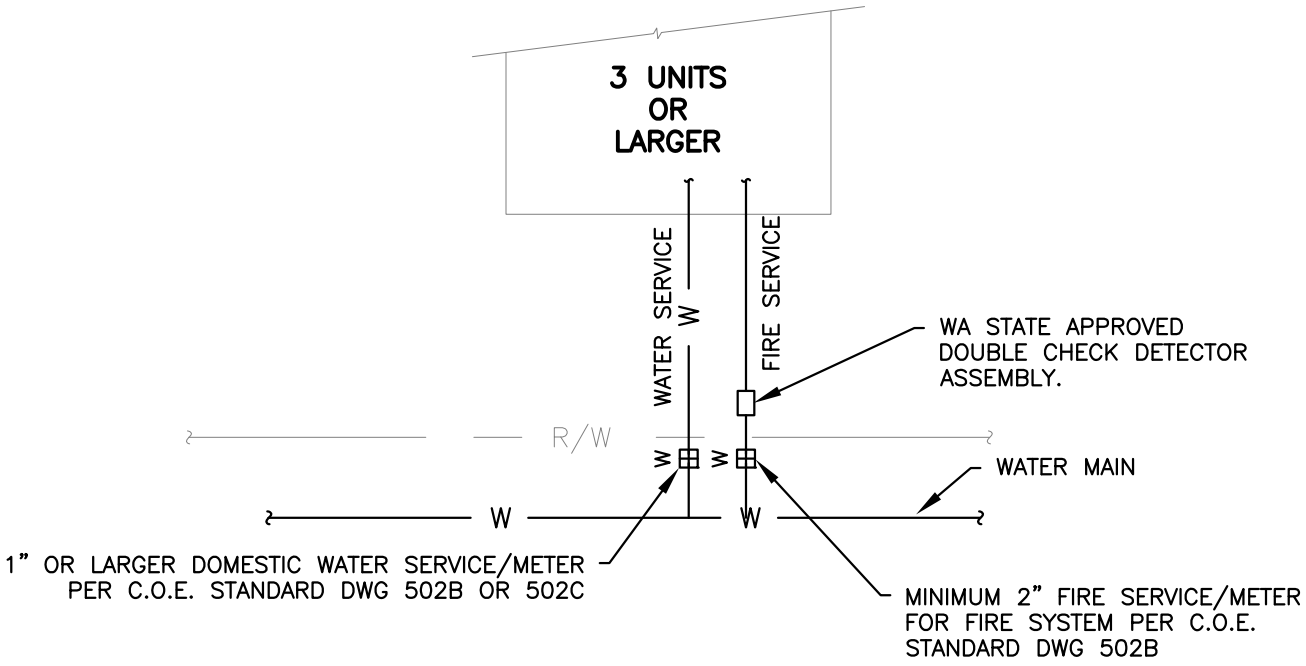

IBC DEFINED MULTIFAMILY OR COMMERCIAL STRUCTURES THAT ARE REQUIRED TO HAVE A FIRE SPRINKLER SYSTEM MUST HAVE A SEPARATE FIRE SERVICE. THE SIZE OF FIRE SPRINKLER SERVICE AND METER SHALL BE CALCULATED BY A CIVIL ENGINEER OR FIRE SPRINKLER DESIGNER WHO IS SOLELY RESPONSIBLE FOR THIS CALCULATION. FIRE SERVICES LARGER THAN 2" MUST CONFORM TO CITY STANDARD 515 AND 523. THE FIRE SERVICE SIDE OF THE SYSTEM MUST HAVE A STATE APPROVED BACKFLOW PREVENTION DEVICE. SYSTEMS INSTALLED WITH THIS CONFIGURATION SHALL BE IN ACCORDANCE WITH NFPA 13R OR NFPA 13.

CITY OF EVERETT **PUBLIC WORKS DEPARTMENT**	RESIDENTIAL FIRE SPRINKLER SYSTEM METERING REQUIREMENTS	2-3-2011 Date: 524A COE Std Dwg:

T:\ACad\eps-coe design & constr specs for development\CURRENT\std detail dwgs\Dwg Files\STD524A.dwg, 2/21/2014 2:24:08 PM

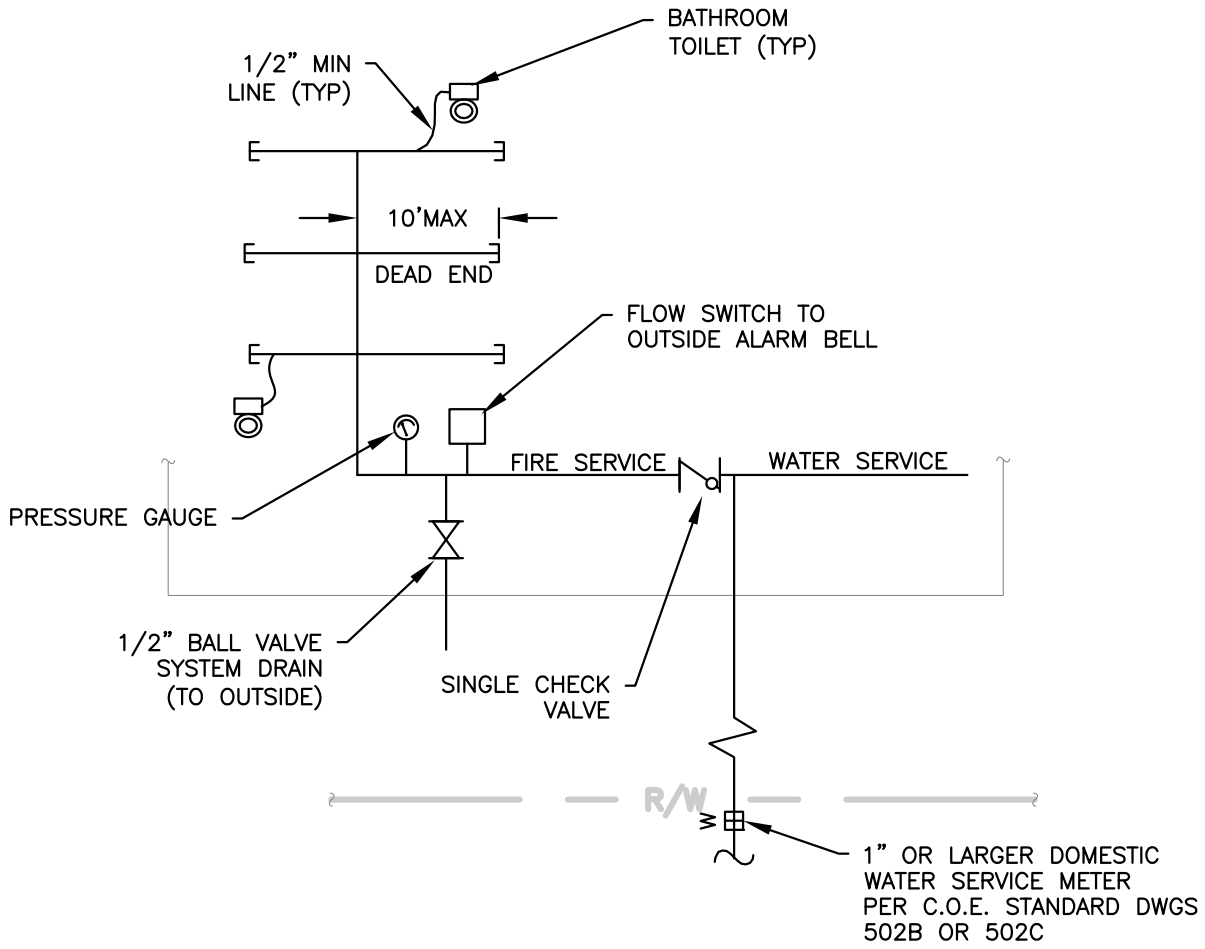

THIS IS A SCHEMATIC DIAGRAM OF THE MINIMUM REQUIREMENTS FOR A MULTIPURPOSE PIPING SYSTEM, PER NFPA 13D. ALL APPLICABLE CODES ARE TO BE FOLLOWED IN THE DESIGN AND INSTALLATION OF THE RESIDENTIAL PLUMBING. CONTACT THE CITY OF EVERETT FIRE MARSHAL'S OFFICE AT (425) 257–8124 OR (425) 257–8120 TO DISCUSS SPECIFIC PROJECTS.

REQUIRED:

- SINGLE CHECK VALVE.
- FLOW SWITCH TO OUTSIDE ALARM BELL.
- 1/2" BALL VALVE SYSTEM DRAIN (TO OUTSIDE).
- PRESSURE GAUGE.
- 1/2" MIN LINES TO MINIMUM 2 TOILETS, AT LEAST ONE TOILET PER FLOOR, FOR EFFECTIVE FLOW THROUGH SYSTEM.

CITY OF EVERETT PUBLIC WORKS DEPARTMENT	TYPICAL MULTIPURPOSE PIPING SYSTEM DIAGRAM FOR IRC SINGLE FAMILY, DUPLEX & TOWNHOUSE STRUCTURES	2–3–2011 Date: 524B COE Std Dwg:

T:\ACad\eps-coe design & constr specs for development\CURRENT\std detail dwgs\Dwg Files\STD524B.dwg, 2/21/2014 2:24:55 PM

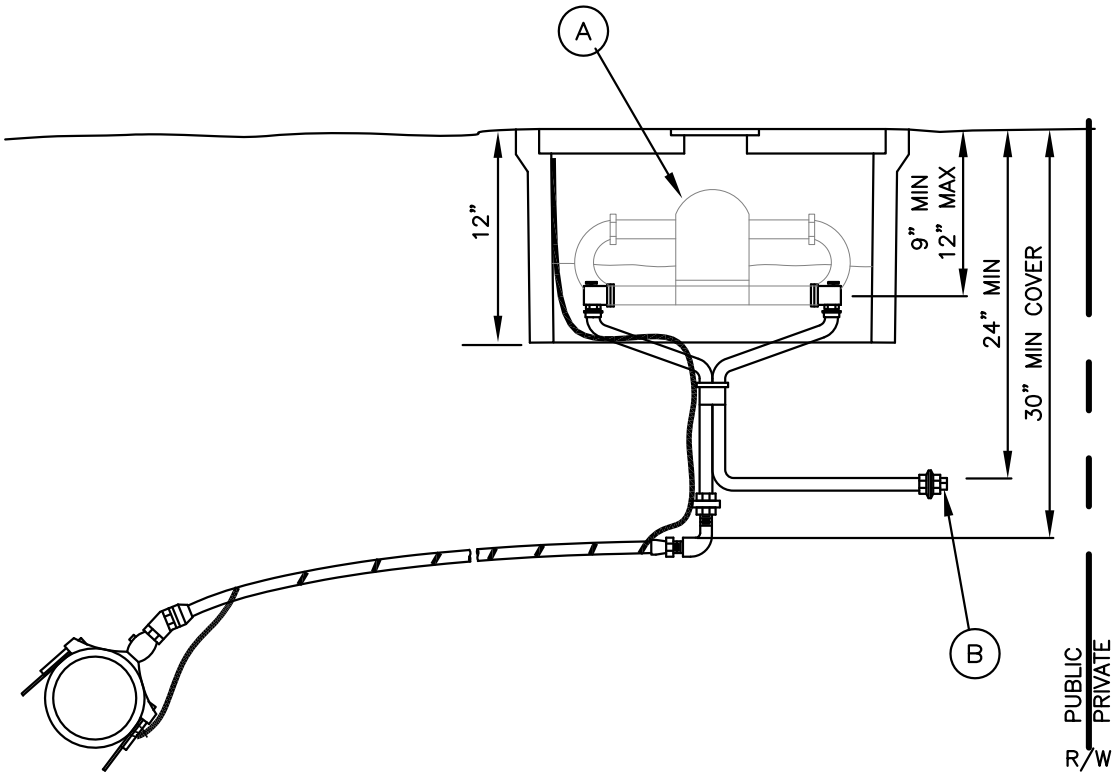

INSTALL PARTS AND FITTINGS PER STANDARD PLAN 502A UNLESS OTHERWISE NOTED.

PARTS:

A. METER/SAMPLING ASSEMBLY WILL BE INSTALLED BY CITY UTILITIES DEPARTMENT.

B. PLUG METER SETTER ON SERVICE SIDE WITH 3/4" BRASS PLUG.

CITY OF EVERETT PUBLIC WORKS DEPARTMENT	3/4" MID POINT SAMPLING TAP	9-13-2007 Date: 525 COE Std Dwg:

T:\ACad\eps-coe design & constr specs for development\CURRENT\std detail dwgs\Dwg Files\STD525.dwg, 2/21/2014 2:25:49 PM

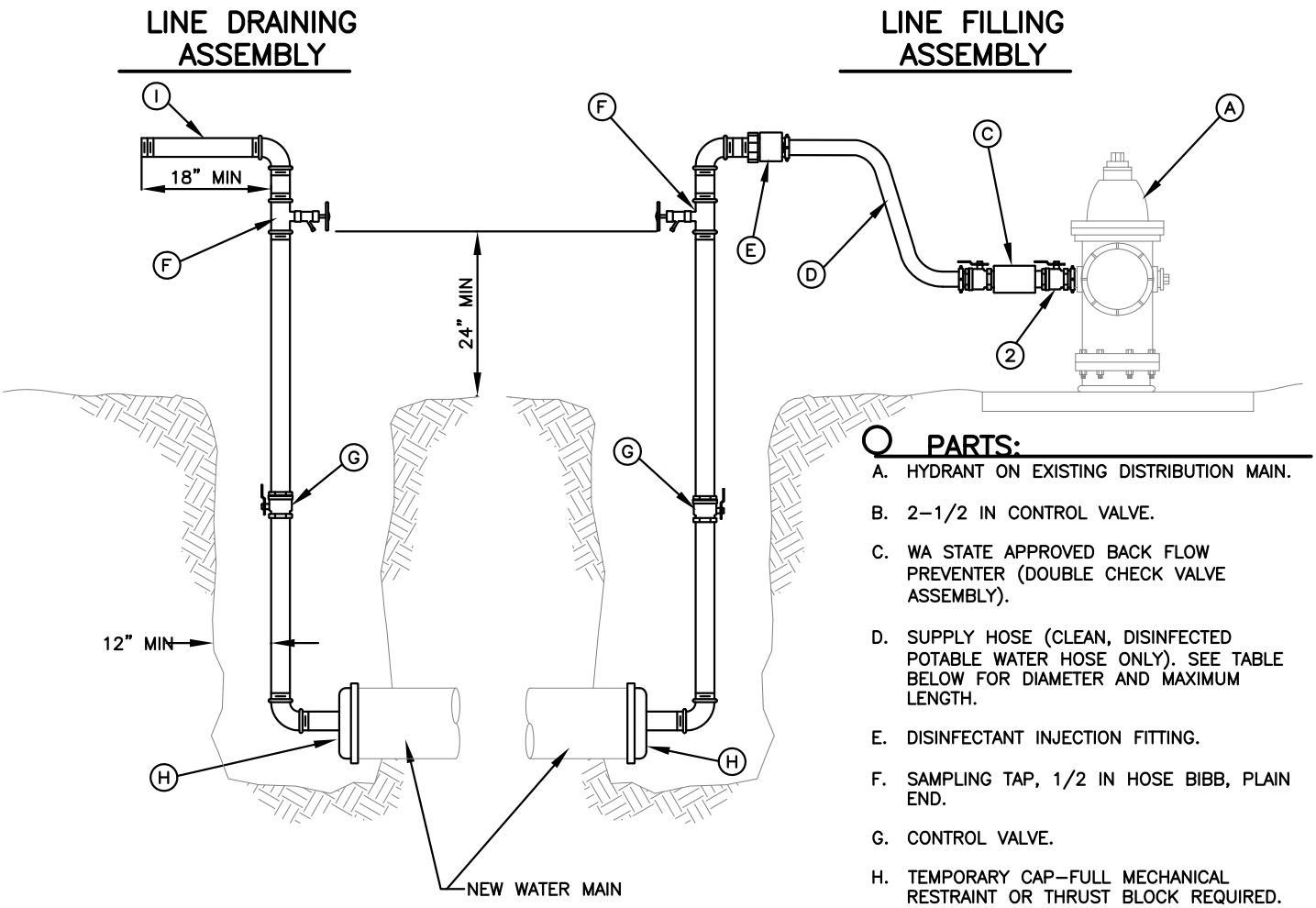

PARTS:

A. HYDRANT ON EXISTING DISTRIBUTION MAIN.

B. 2–1/2 IN CONTROL VALVE.

C. WA STATE APPROVED BACK FLOW PREVENTER (DOUBLE CHECK VALVE ASSEMBLY).

D. SUPPLY HOSE (CLEAN, DISINFECTED POTABLE WATER HOSE ONLY). SEE TABLE BELOW FOR DIAMETER AND MAXIMUM LENGTH.

E. DISINFECTANT INJECTION FITTING.

F. SAMPLING TAP, 1/2 IN HOSE BIBB, PLAIN END.

G. CONTROL VALVE.

H. TEMPORARY CAP–FULL MECHANICAL RESTRAINT OR THRUST BLOCK REQUIRED.

I. FLUSHING DISCHARGE PIPE. CAP WHEN NOT IN USE. MAY REQUIRE DECHLORINATION. DO NOT ALLOW DISCHARGE TO DRAIN TO TRENCH.

REQUIRED FLOW & OPENINGS TO FLUSH PIPELINES *

PIPE DIAMETER	FLOW REQUIRED TO PRODUCE 2.5 FT/S (APPROX.) VELOCITY IN MAIN	NUMBER OF TAPS ON PIPE ** SIZE OF TAP, INCHES			NUMBER OF 2 1/2" HYDRANT OUTLETS USING 2 1/2" DIA SUPPLY HOSE	*** MAXIMUM LENGTH OF SUPPLY HOSE
IN	GPM	1	1 1/2	2		FT
4	100	1	–	–	1	500
6	200	–	1	–	1	100
8	400	–	2	1	2	100
10	600	–	3	2	2	100
12	900	–	–	2	2 (3" DIA HOSE)	100

* WITH A 40–PSI PRESSURE IN THE MAIN AND THE HYDRANT FLOWING TO ATMOSPHERE, A 2–1/2 IN. (64MM) HYDRANT OUTLET WILL DISCHARGE APPROXIMATELY 1000 GPM; AND A 4–1/2 HYDRANT OUTLET WILL DISCHARGE APPROXIMATELY 2500 GPM.

** NUMBER OF TAPS ON PIPE BASED ON DISCHARGE THROUGH 5 FT OF GALVANIZED IRON (GI) PIPE WITH ONE 90° ELBOW.

*** ALTERNATE HOSE DIAMETERS AND LENGTHS MAY BE USED IF CALCULATIONS SUPPORTING THEIR USE ARE PREVIOUSLY APPROVED BY THE CITY UTILITIES DEPARTMENT.

CITY OF EVERETT
PUBLIC WORKS DEPARTMENT

SAMPLING AND FLUSHING ASSEMBLIES

9–13–2007
Date:

526
COE Std Dwg:

T:\ACad\eps-coe design & constr specs for development\CURRENT\std detail dwgs\Dwg Files\STD526.dwg, 2/21/2014 2:27:16 PM

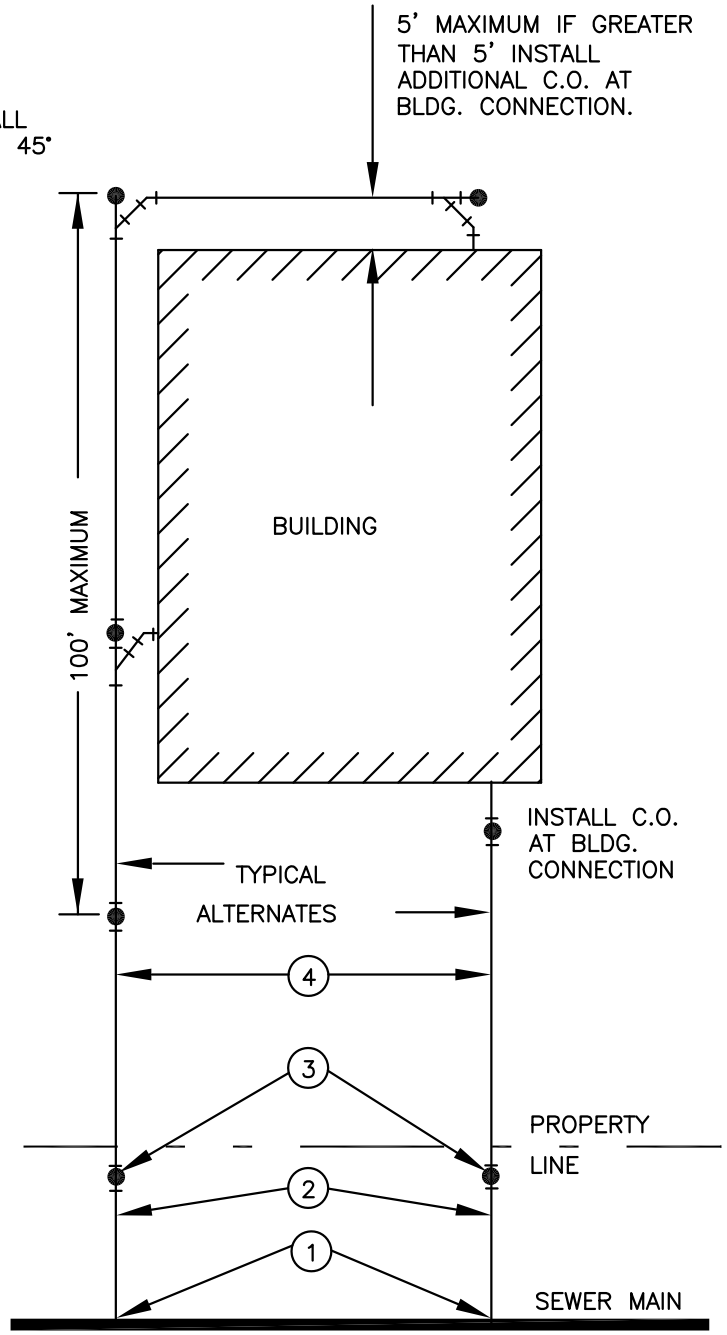

GENERAL NOTES:

1. SEE SECTION 7 OF STANDARD SPECIFICATIONS FOR ROADS; BRIDGE AND MUNICIPAL CONSTRUCTION WSDOT/APWA AND CITY SPECIAL PROVISIONS SECTION 7–18 FOR DETAILS AND REQUIREMENTS ON LATERALS.
2. ALL C.O.'S ON PRIVATE PROPERTY ARE TO BE ADJUSTED TO GRADE IF IN PAVED AREAS PER STD. PLAN #604.
3. C.O.'S ARE TO BE CONSTRUCTED WITH WYES OR SANITARY "T"S (SWEEPS). STRAIGHT "T"S ARE NOT PERMITTED.
4. ALLOWABLE GRADES ARE 2% (1/4"/FT) MINIMUM TO 100% (FT/FT) MAXIMUM.
5. SEWER MUST BE STRAIGHT BETWEEN ANGLE POINTS, CHANGES IN LINE OR GRADE SHALL BE MADE WITH APPROVED FITTINGS.
6. NORMALLY ONLY ONE(1) CONNECTION TO THE SEWER MAIN PER BLDG. IS ALLOWED. TWO (2) DIFFERENT LAYOUTS ARE SHOWN FOR ILLUSTRATIVE PURPOSES ONLY!

(#) CONSTRUCTION NOTES:

1. CONNECTION TO SEWER MAIN PER SEC. 7 OF STANDARD SPECIFICATIONS AND SPECIAL PROVISIONS AND STD DWG #602
2. INSTALL 6" MINIMUM PIPE SIZE IN R.O.W.
3. INSTALL 6" C.O. PER STD. PLAN #604.
4. PRIVATE SIDE SEWER PIPE DIAMETER:
   4" MINIMUM FOR SINGLE FAMILY
   6" MINIMUM FOR ALL OTHER USES.

CITY OF EVERETT PUBLIC WORKS DEPARTMENT	TYPICAL SIDE SEWER LAYOUTS	8/10/2011 Date:
		601 COE Std Dwg:

T:\ACad\eps-coe design & constr specs for development\CURRENT\std detail dwgs\Dwg Files\STD601.dwg, 2/21/2014 2:28:19 PM

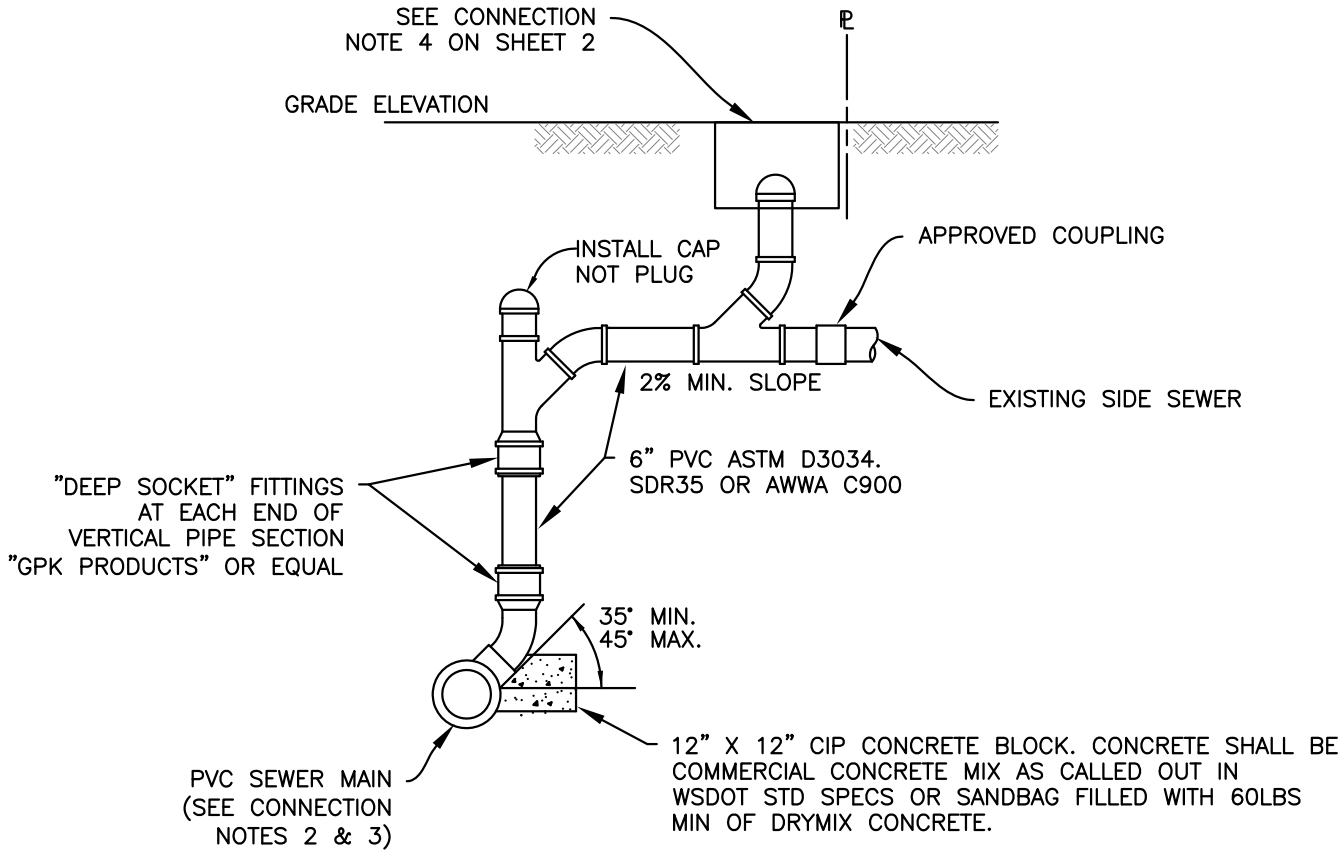

TYPE "A"

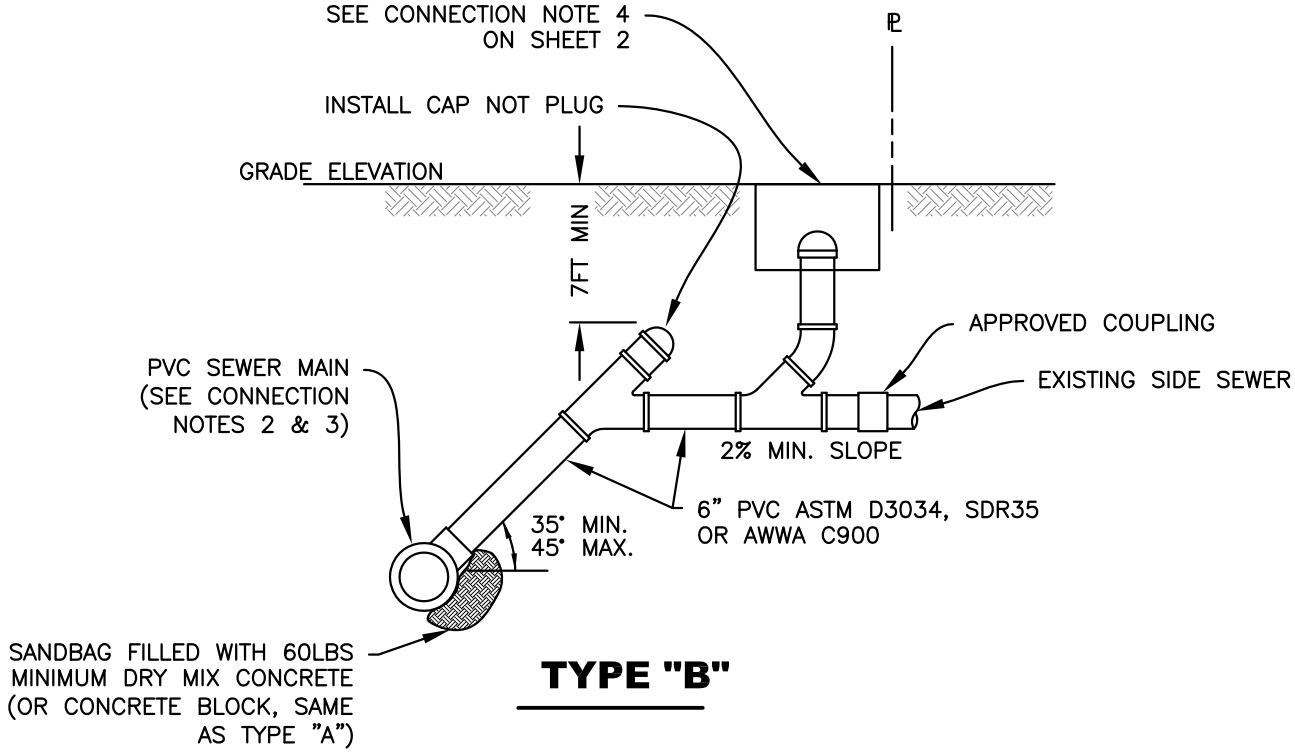

TYPE "B"

CITY OF EVERETT
PUBLIC WORKS DEPARTMENT

TYPICAL SDE SEWER CONNECTIONS
TYPE A AND B
SHT 1 OF 3

8/10/2011
Date:

602
COE Std Dwg:

T:\ACad\eps-coe design & constr specs for development\CURRENT\std detail dwgs\Dwg Files\STD602.dwg, 2/21/2014 2:29:02 PM

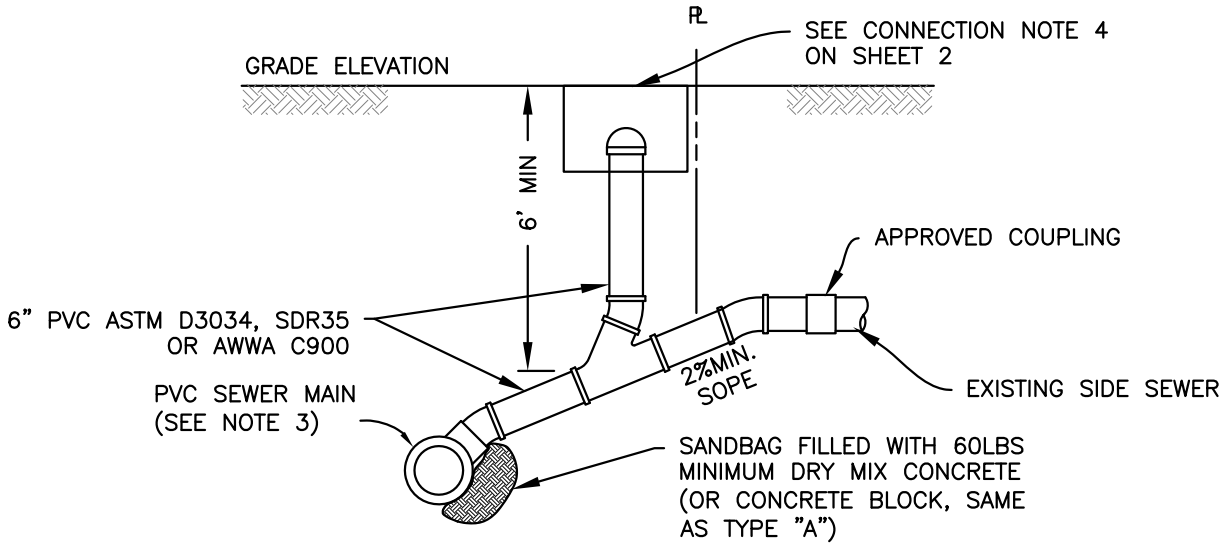

TYPE "C"

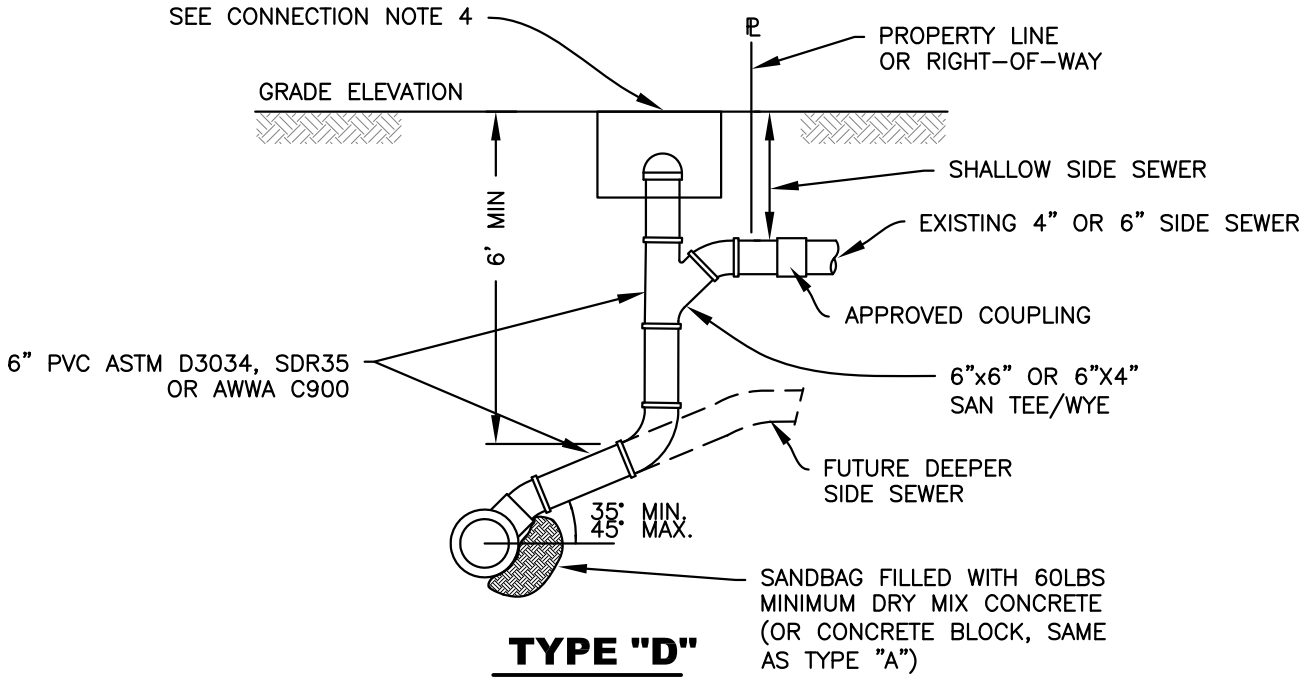

TYPE "D"

CONNECTION NOTES:

1. PVC SIDE SEWER CONNECTIONS TO PVC NEW MAINS SHALL BE FACTORY TEES.
2. TYPE A & B SHALL BE USED ONLY WHEN SEWER MAIN DEPTH EXCEEDS 15 FEET OR AS APPROVED BY THE ENGINEER. TYPE D SHALL BE USED WHEN EXISTING SIDE SEWER IS SHALLOW (LESS THAN 6' DEPTH AT PROPERTY LINE)
3. CONNECTIONS TO EXISTING CONCRETE SEWER MAINS SHALL BE MADE PER STD DWGS 612 & 613 OR BY APPROVED MANUFACTURED CONCRETE TEE.
4. SEE STANDARD DRAWING 604. WHERE RING AND COVER INSTALLATIONS ARE SHOWN FOR PAVED AND UNPAVED AREAS, FIELD CONDITIONS WILL DICTATE WHICH INSTALLATION IS APPROPRIATE.
5. CONNECTIONS TO EXISTING HDPE SEWER MAINS SHALL BE MADE PER STD DWG 612 OR SIDE-WALL FUSION.

EVERETT **CITY OF EVERETT** **PUBLIC WORKS DEPARTMENT**	TYPICAL SDE SEWER CONNECTIONS TYPE C & D SHT 2 OF 3	8/10/2011 Date: 602 COE Std Dwg:

T:\ACad\eps-coe design & constr specs for development\CURRENT\std detail dwgs\Dwg Files\STD602.dwg, 2/21/2014 2:29:22 PM

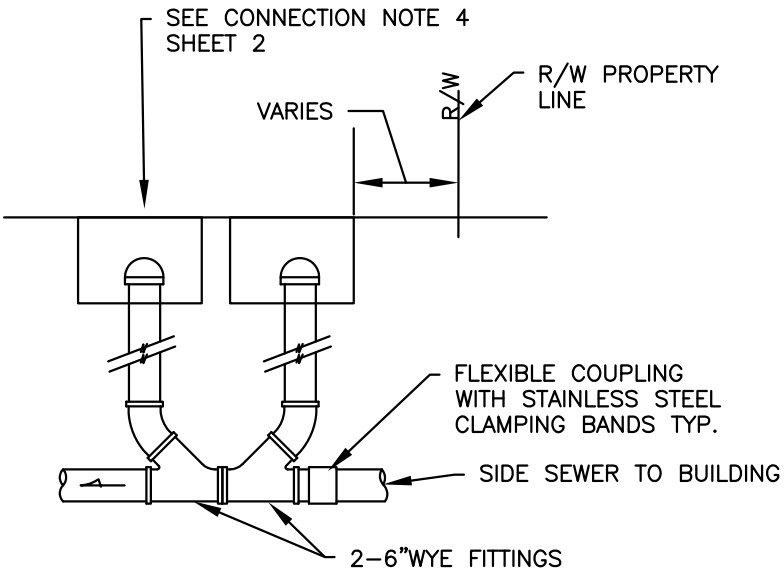

TWO-WAY SEWER CLEANOUT FOR STREETS

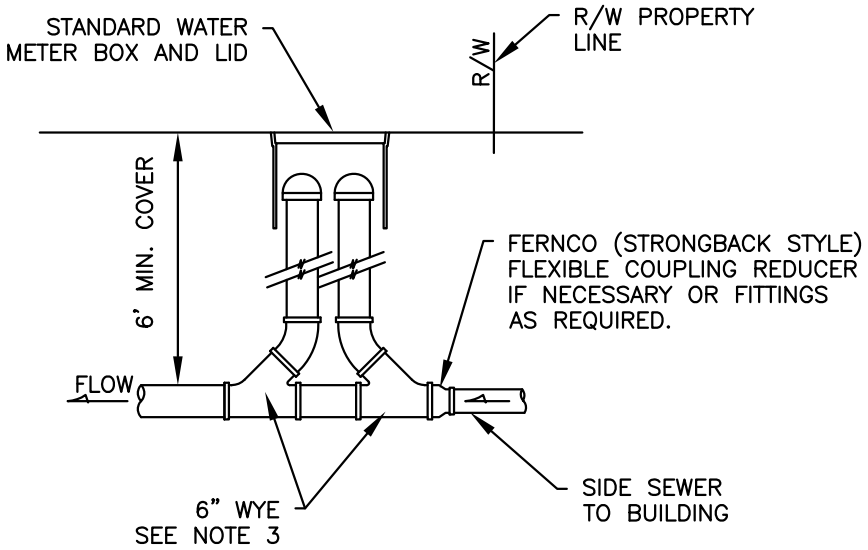

TWO-WAY SEWER CLEANOUT FOR ALLEYS

TWO–WAY CLEANOUT NOTES:

1. OPPOSING CLEANOUTS SHALL BE INSTALLED.
2. CLEAN–OUT PIPE AND FITTINGS SHALL BE PVC ASTM D3034, SDR 35 OR AWWA C900.
3. SANITARY TEE OR WYE FITTINGS SHALL BE INSTALLED. STRAIGHT TEES ARE NOT ALLOWED.
4. TWO–WAY SEWER CLEAN OUTS ARE ONLY REQUIRED WHERE DIRECTED BY THE CITY.

CITY OF EVERETT PUBLIC WORKS DEPARTMENT	TYPICAL SDE SEWER CONNECTIONS TWO–WAY CLEAN–OUTS SHT 3 OF 3	8/10/2011 Date: 602 COE Std Dwg:

T:\ACad\eps-coe design & constr specs for development\CURRENT\std detail dwgs\Dwg Files\STD602.dwg, 2/21/2014 2:29:47 PM

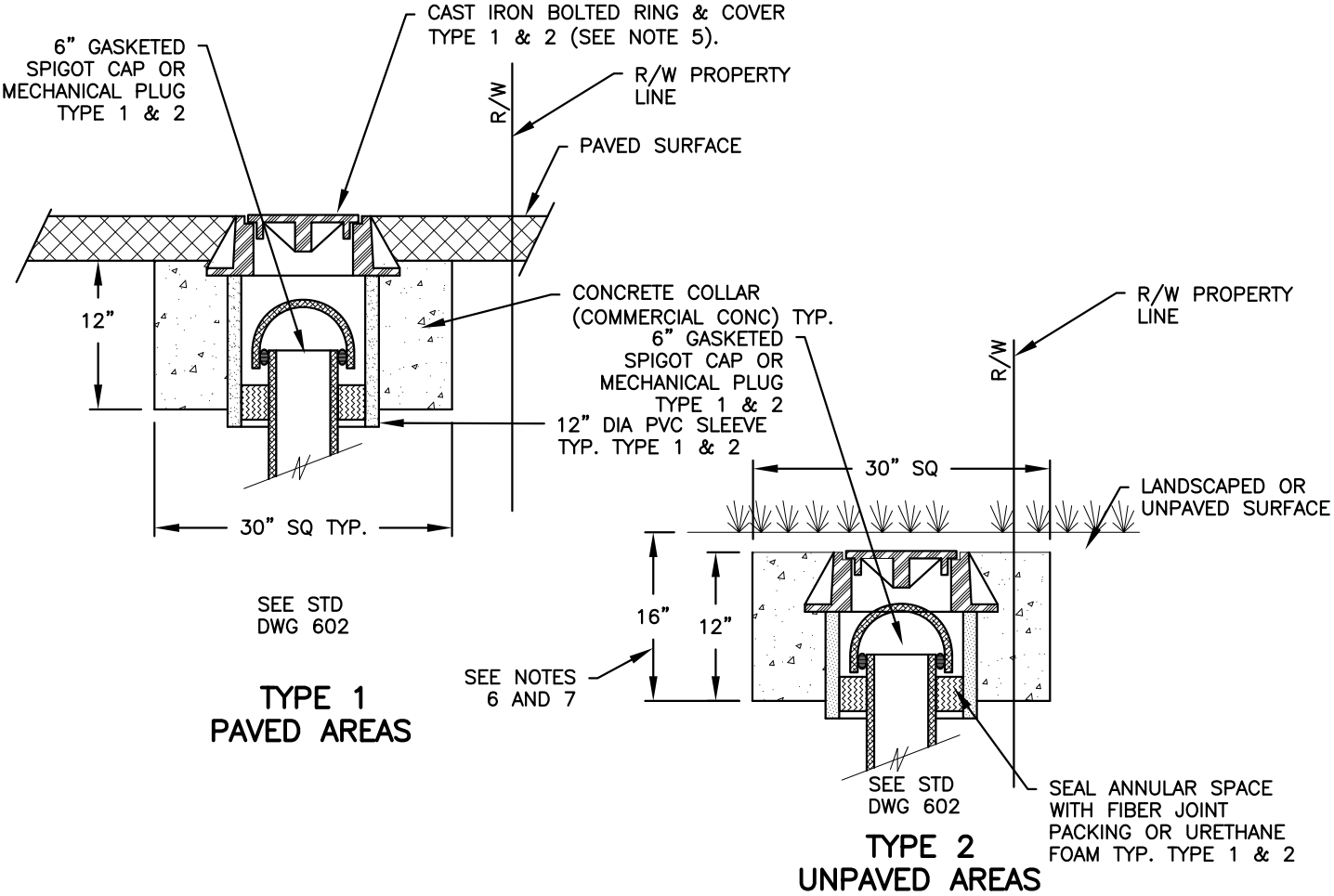

PERMANENT INSTALLATIONS

NOTES

1. CLEAN–OUT PIPE AND FITTINGS SHALL BE PVC, ASTM D3034, SDR 35 OR AWWA C900.
2. A SANITARY TEE MAY BE INSTALLED IN LIEU OF A WYE AS SHOWN. STRAIGHT TEES ARE NOT ACCEPTABLE.
3. SEWER STUB WILL BE EXTENDED 10' BEYOND PROPERTY LINE TO PREVENT DAMAGE TO CLEAN–OUT AND MINIMIZE CONFLICTS WITH OTHER UTILITIES WHEN SERVICE TO BUILDING IS INSTALLED.
4. TYPE 3 TEMPORARY INSTALLATIONS (NEW DEVELOPMENT) SHALL HAVE A PRESSURE TREATED 2"X4" STUB MARKER THAT EXTENDS DOWN TO A MIN OF 24" BELOW GROUND. A MIN OF 36" SHALL EXTEND ABOVE GROUND. STUB MARKER SHALL BE PAINTED WITH WHITE TRAFFIC PAINT. THE WORD "SEWER" AND THE DEPTH IN FEET FROM GROUND SURFACE TO SEWER STUB PIPE INVERT SHALL BE PAINTED ON THE MARKER WITH 3" HIGH BLACK PAINTED LETTERS.
5. CAST IRON BOLTED RING AND COVER SHALL BE EAST JORDAN IRON WORKS NO. 3660CPT OR EQUAL.
6. RING AND COVER INSTALLATION IS SHOWN FOR PAVED AND UNPAVED AREAS, FIELD CONDITIONS WILL DICTATE WHICH INSTALLATION IS APPROPRIATE.
7. RING AND COVER WITH CONCRETE COLLAR MAY BE PLACED AT GROUND SURFACE IN UNPAVED AREAS IF DESIRED.

CITY OF EVERETT PUBLIC WORKS DEPARTMENT	SEWER CLEAN–OUT TYPE 1 & 2 SHT 1 OF 2	8/10/2011 Date: 604 COE Std Dwg:

T:\ACad\eps-coe design & constr specs for development\CURRENT\std detail dwgs\Dwg Files\STD604.dwg, 2/21/2014 2:30:34 PM

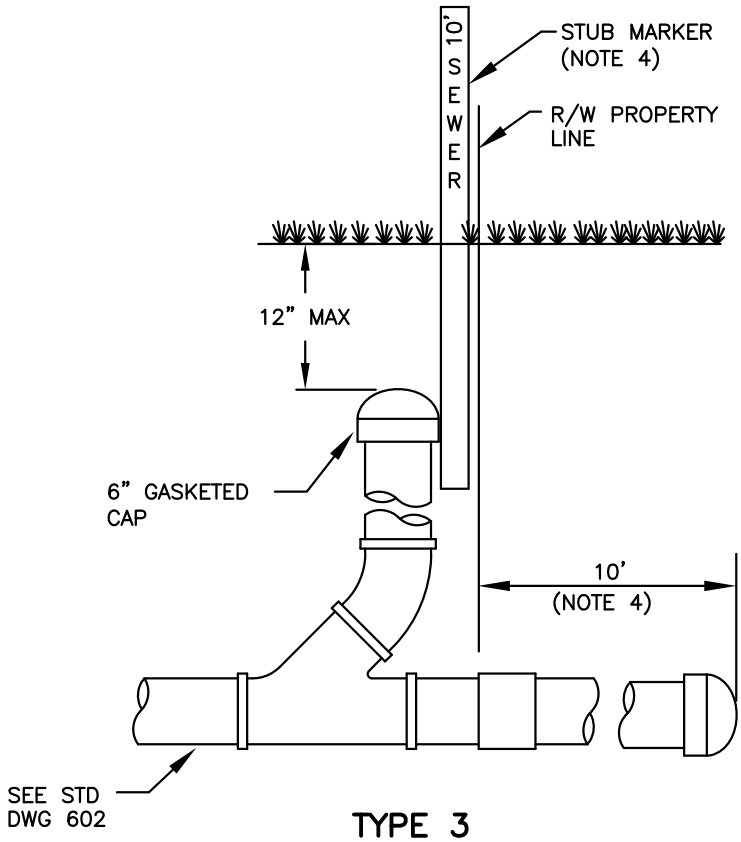

TYPE 3
UNPAVED AREA

TEMPORARY INSTALLATION FOR NEW DEVELOPMENT

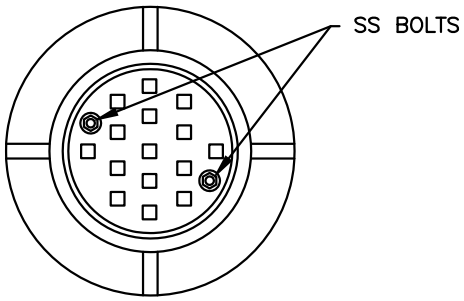

PLAN

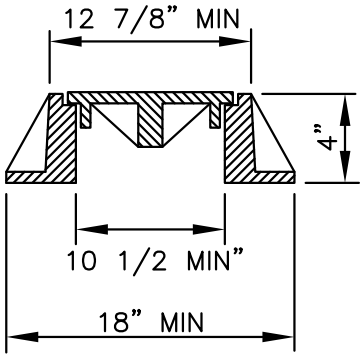

SECTION

12" CAST IRON BOLTED RING AND COVER

(SEE NOTE 5)

CITY OF EVERETT PUBLIC WORKS DEPARTMENT	SEWER CLEAN-OUT TYPE 3, AND 12" CAST IRON RING & COVER SHT 2 OF 2	8/10/2011 Date: 604 COE Std Dwg:

T:\ACad\eps-coe design & constr specs for development\CURRENT\std detail dwgs\Dwg Files\STD604.dwg, 2/21/2014 2:31:00 PM

GENERAL NOTES:

1. MANHOLES TO BE CONSTRUCTED IN ACCORDANCE WITH AASHTO M-199 (ASTM C 478) UNLESS OTHERWISE SHOWN ON PLANS OR NOTED IN STANDARD SPECIFICATIONS.
2. ALL REINFORCED CAST IN PLACE CONCRETE SHALL BE CLASS 4000. NON-REINFORCED CONCRETE IN CHANNEL AND SHELF SHALL BE 7 SACK MIX SAND AND CEMENT GROUT. ALL PRECAST CONCRETE SHALL BE CLASS 4000.
3. PRECAST BASES SHALL BE FURNISHED WITH CUTOUTS FOR KNOCKOUTS. KNOCKOUTS SHALL HAVE A WALL THICKNESS OR 2" MINIMUM.
4. ALL BASE REINFORCING STEEL SHALL HAVE A MINIMUM YIELD STRENGTH OF 60,000 PSI AND BE PLACED IN THE UPPER HALF OF THE BASE WITH 1" MINIMUM CLEARANCE.
5. KNOCKOUT OR CUTOUT HOLE SIZE IS EQUAL TO PIPE OUTER DIAMETER PLUS MANHOLE WALL THICKNESS.
6. MANHOLE DIA. DEPENDS ON: SIZE, LOCATION AND NUMBER OF PENETRATIONS FOR PIPES. MANHOLE DESIGN AND SIZE SHALL BE APPROVED AND WARRANTED BY THE MANHOLE SUPPLIER.
7. FOR HEIGHTS OVER 25' MANHOLE BASE SLAB SHALL BE DESIGNED BY A STRUCTURAL ENGINEER.
8. CONCRETE CHANNEL AND SHELF SHALL BE FIELD-FORMED EXCEPT WHERE APPROVED IN ADVANCE BY CITY.

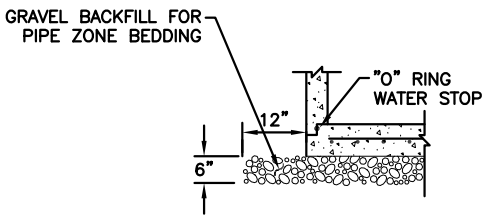

SEPARATE BASE PRECAST

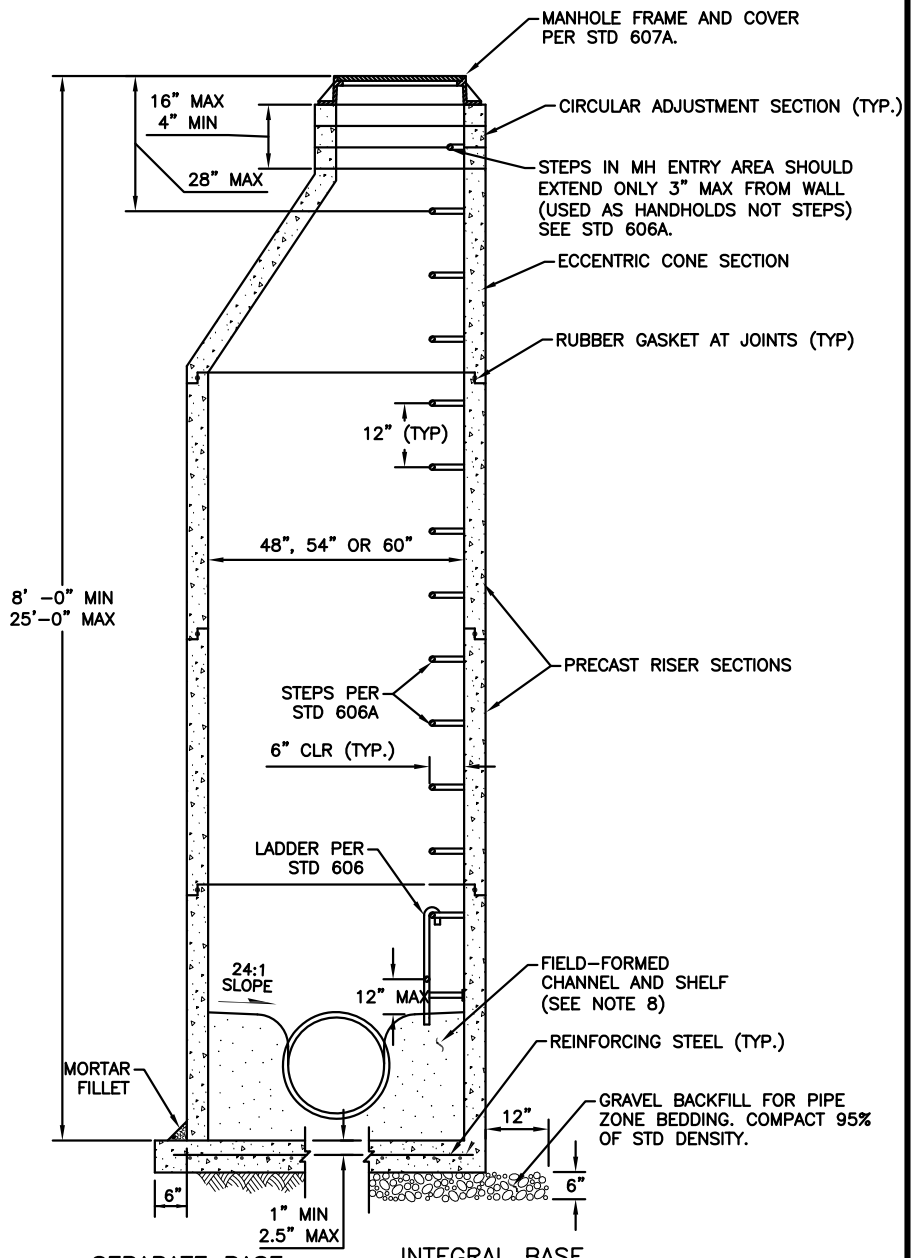

NOTE: KNOCKOUTS SHALL HAVE A WALL THICKNESS OF 2" MINIMUM TO 2.5" MAXIMUM.

MANHOLE DIMENSIONS TABLE

DIAM.	WALL THICKNESS	BASE THICKNESS	MAXIMUM KNOCKOUT SIZE	MINIMUM DISTANCE BETWEEN KNOCKOUTS	BASE REINFORCING STEEL IN^2/FT IN EACH DIRECTION	
					SEPARATE BASE	INTEGRAL BASE
48"	4"	6"	36"	8"	0.23	0.15
54"	4.5"	8"	42"	8"	0.19	0.19
60"	5"	8"	48"	8"	0.25	0.25

WSDOT STD PLAN B-15.20, MANHOLE TYPE 1 ACCEPTABLE SUBSTITUTE

CITY OF EVERETT
PUBLIC WORKS DEPARTMENT

TYPE 1 MANHOLE
48", 54" AND 60"

8-10-2011
Date:

605A
COE Std Dwg:

T:\ACad\eps-coe design & constr specs for development\CURRENT\std detail dwgs\Dwg Files\STD605A.dwg, 2/21/2014 2:32:29 PM

GENERAL NOTES:

1. MANHOLES TO BE CONSTRUCTED IN ACCORDANCE WITH AASHTO M–199 (ASTM C 478) UNLESS OTHERWISE SHOWN ON PLANS OR NOTED IN STANDARD SPECIFICATIONS.
2. ALL REINFORCED CAST IN PLACE CONCRETE SHALL BE CLASS 4000. NON–REINFORCED CONCRETE IN CHANNEL AND SHELF SHALL BE 7 SACK MIX SAND AND CEMENT GROUT. ALL PRECAST CONCRETE SHALL BE CLASS 4000.
3. PRECAST BASES SHALL BE FURNISHED WITH CUTOUTS FOR KNOCKOUTS. KNOCKOUTS SHALL HAVE A WALL THICKNESS OR 2" MINIMUM.
4. ALL BASE REINFORCING STEEL SHALL HAVE A MINIMUM YIELD STRENGTH OF 60,000 PSI AND BE PLACED IN THE UPPER HALF OF THE BASE WITH 1" MINIMUM CLEARANCE.
5. KNOCKOUT OR CUTOUT HOLE SIZE IS EQUAL TO PIPE OUTER DIAMETER PLUS MANHOLE WALL THICKNESS.
6. MANHOLE DIA. DEPENDS ON: SIZE, LOCATION AND NUMBER OF PENETRATIONS FOR PIPES. MANHOLE DESIGN AND SIZE SHALL BE APPROVED AND WARRANTED BY THE MANHOLE SUPPLIER.
7. FOR HEIGHTS OVER 25' MANHOLE BASE SLAB DESIGN SHALL BE DESIGNED BY A STRUCTURAL ENGINEER.
8. CONCRETE CHANNEL AND SHELF SHALL BE FIELD–FORMED EXCEPT WHERE APPROVED IN ADVANCE BY CITY.

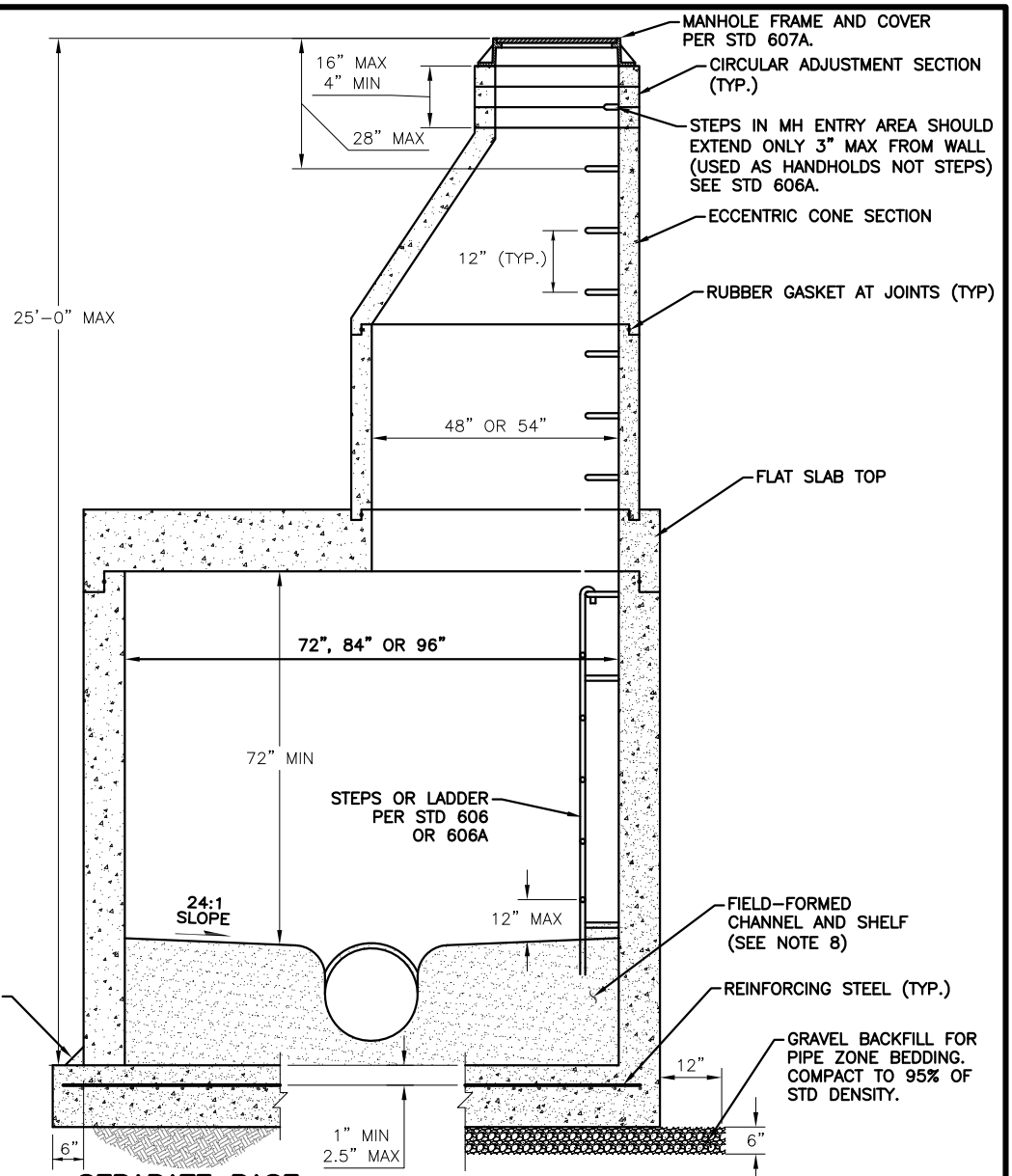

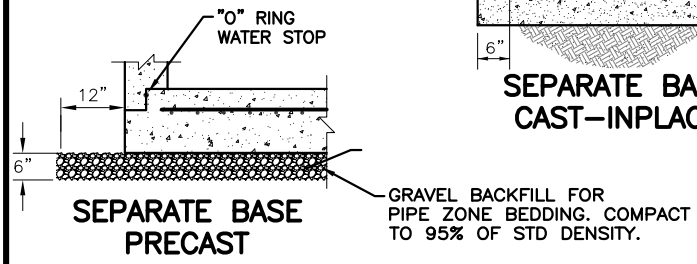

MANHOLE DIMENSIONS TABLE

DIAM.	WALL THICKNESS	BASE THICKNESS	MAXIMUM KNOCKOUT SIZE	MINIMUM DISTANCE BETWEEN KNOCKOUTS	BASE REINFORCING STEEL IN^2/FT IN EACH DIRECTION	
					SEPARATE BASE	INTEGRAL BASE
72"	6"	8"	60"	12"	0.35	0.24
84"	8"	12"	72"	12"	0.39	0.29
96"	8"	12"	84"	12"	0.39	0.29

NOTE: KNOCKOUTS SHALL HAVE A WALL THICKNESS OF 2" MINIMUM TO 2.5" MAXIMUM.

WSDOT STD PLAN B–15.40.00,
MANHOLE TYPE 2
ACCEPTABLE SUBSTITUTE

CITY OF EVERETT
PUBLIC WORKS DEPARTMENT

TYPE 2 MANHOLE
72", 84" & 96"

8–10–2011
Date:

605B
COE Std Dwg:

T:\ACad\eps-coe design & constr specs for development\CURRENT\std detail dwgs\Dwg Files\STD605B.dwg, 2/21/2014 2:33:41 PM

GENERAL NOTES:

1. MANHOLES TO BE CONSTRUCTED IN ACCORDANCE WITH AASHTO M-199 (ASTM C 478) UNLESS OTHERWISE SHOWN ON PLANS OR NOTED IN STANDARD SPECIFICATIONS.
2. ALL RREINFORCED CAST IN PLACE CONCRETE SHALL BE CLASS 4000. NON-REINFORCED CONCRETE IN CHANNEL AND SHELF SHALL BE 7 SACK MIX SAND AND CEMENT GROUT. ALL PRECAST CONCRETE SHALL BE CLASS 4000.
3. PRECAST BASES SHALL BE FURNISHED WITH CUTOUTS FOR KNOCKOUTS. KNOCKOUTS SHALL HAVE A WALL THICKNESS OR 2" MINIMUM.
4. ALL BASE REINFORCING STEEL SHALL HAVE A MINIMUM YIELD STRENGTH OF 60,000 PSI AND BE PLACED IN THE UPPER HALF OF THE BASE WITH 1" MINIMUM CLEARANCE.
5. KNOCKOUT OR CUTOUT HOLE SIZE IS EQUAL TO PIPE OUTER DIAMETER PLUS MANHOLE WALL THICKNESS.
6. MANHOLE DIA. DEPENDS ON: SIZE, LOCATION AND NUMBER OF PENETRATIONS FOR PIPES. MANHOLE DESIGN AND SIZE SHALL BE APPROVED AND WARRANTED BY THE MANHOLE SUPPLIER.
7. FOR HEIGHTS OVER 25' MANHOLE BASE SLAB DESIGN SHALL BE DESIGNED BY A STRUCTURAL ENGINEER.
8. CONCRETE CHANNEL AND SHELF SHALL BE FIELD-FORMED EXCEPT WHERE APPROVED IN ADVANCE BY CITY.

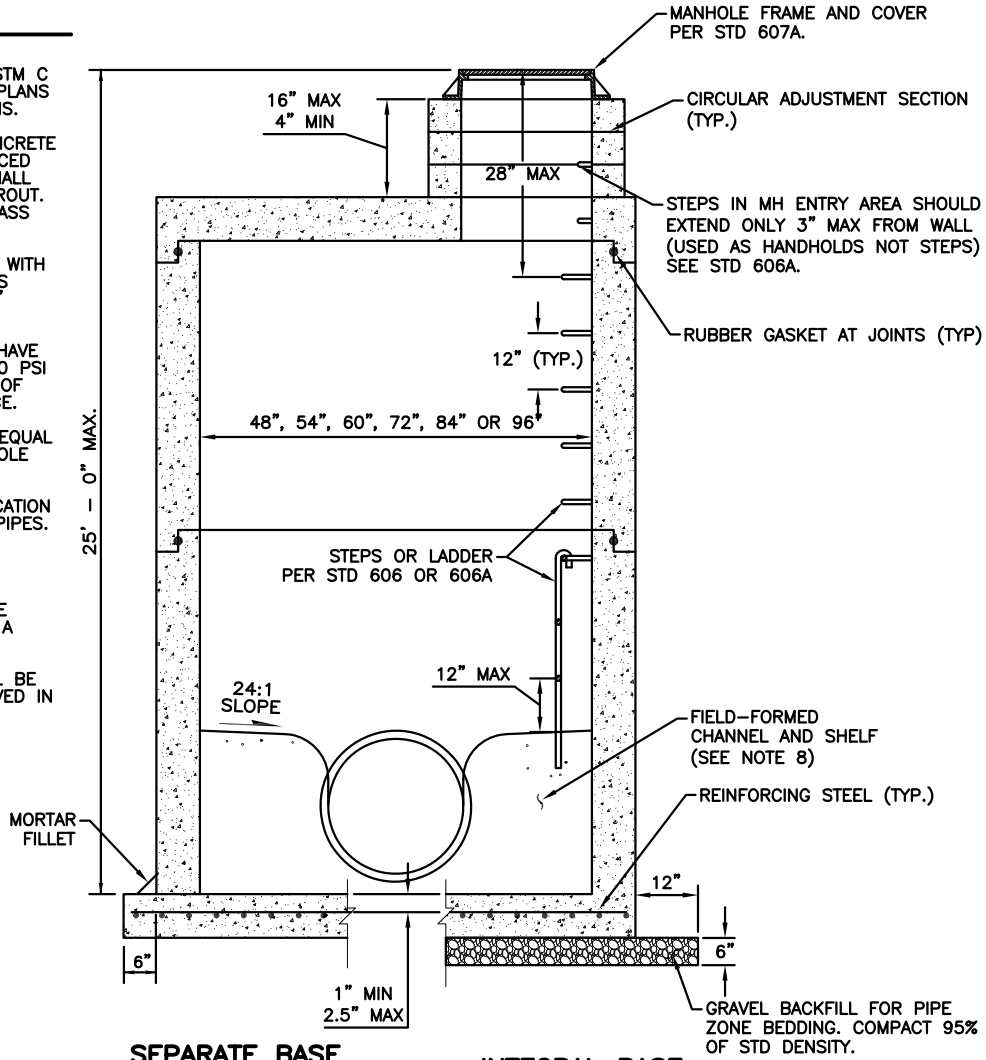

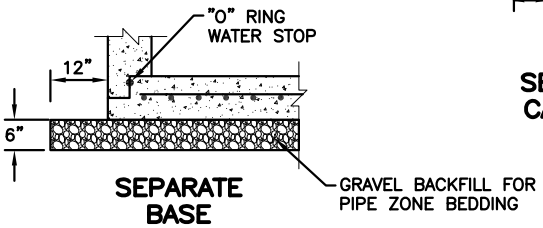

SEPARATE BASE PRECAST

MANHOLE DIMENSION TABLE

DIAM.	WALL THICKNESS	BASE THICKNESS	MAXIMUM KNOCKOUT SIZE	MINIMUM DISTANCE BETWEEN KNOCKOUTS	BASE REINFORCING STEEL IN²/FT. IN EACH DIRECTION	
					SEPARATE BASE	INTEGRAL BASE
48"	4"	6"	36"	8"	0.23	0.15
54"	4.5"	8"	42"	8"	0.19	0.19
60"	5"	8"	48"	8"	0.25	0.25
72"	6"	8"	60"	12"	0.35	0.24
84"	8"	12"	72"	12"	0.39	0.29
96"	8"	12"	84"	12"	0.39	0.29

NOTE: KNOCKOUTS SHALL HAVE A WALL THICKNESS OF 2" MINIMUM TO 2.5" MAXIMUM.

WSDOT STD PLAN B-15.60.00,
MANHOLE TYPE 3
ACCEPTABLE SUBSTITUTE

CITY OF EVERETT
PUBLIC WORKS DEPARTMENT

TYPE 3 MANHOLE
48", 54" 60", 72", 84" & 96"

8/10/2011
Date:

605C
COE Std Dwg:

T:\ACad\eps-coe design & constr specs for development\CURRENT\std detail dwgs\Dwg Files\STD605C.dwg, 2/21/2014 2:35:01 PM

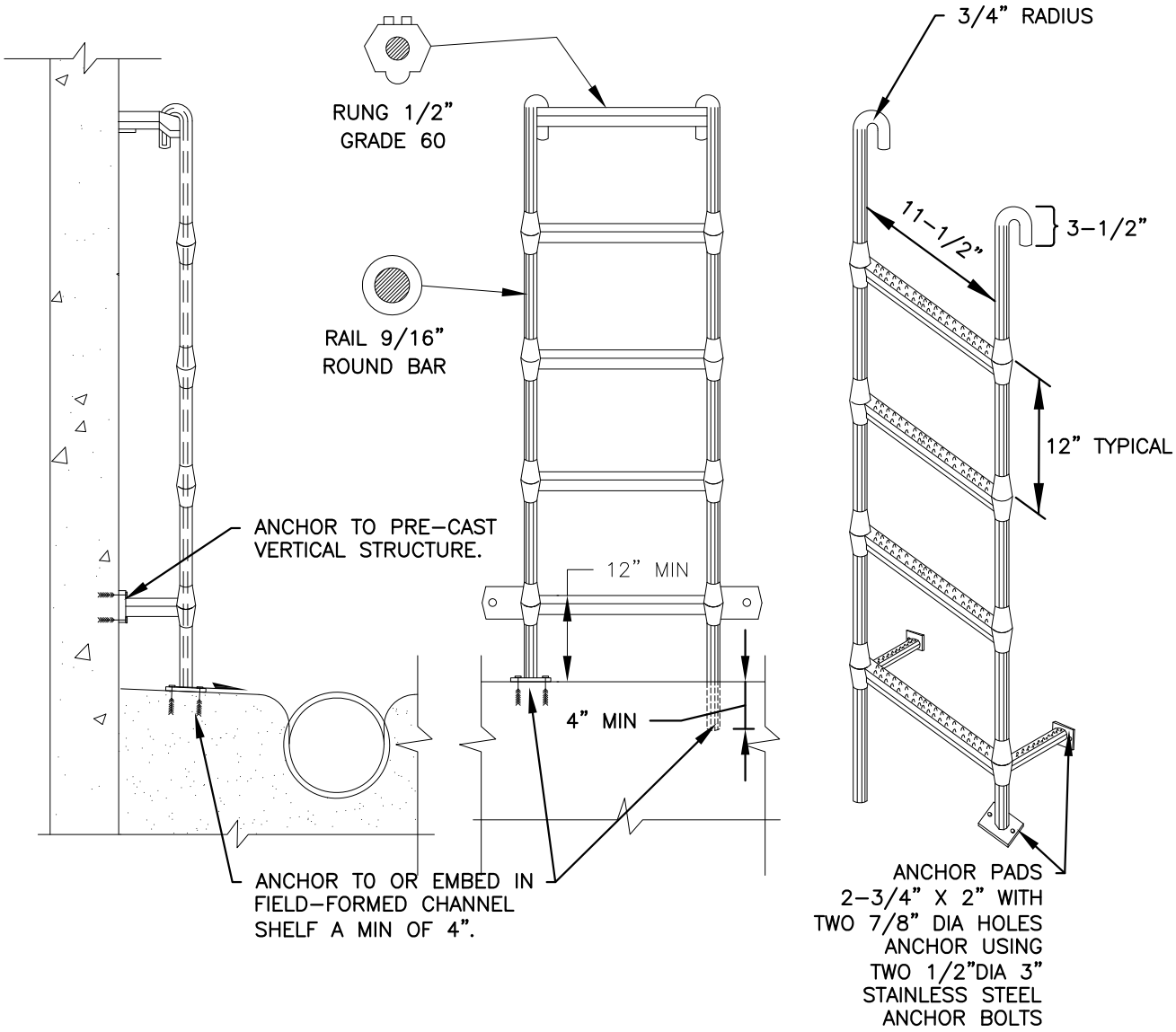

NOTES:

1. STEPS SHALL BE STEEL REINFORCED COPOLYMER POLYPROPYLENE PLASTIC CONFORMING TO:

   (A) ASTM C 478 AND AASHTO M-199, ANCHOR-BOLTS SHALL HAVE A MINIMUM HORIZONTAL PULLOUT RATING OF 1500 LBS.

   (B) ASTM A615 GRADE 60 (DEFORMED REINFORCING STEEL BAR).

   (C) POLYPROPYLENE CONFORMS TO D-4101.

2. MANHOLE STEPS SHALL HAVE MOLDED SAFETY HAND GRIP. RED REFLECTORS ARE PREFERRED.
3. ALL FABRICATION DIMENSIONS INDICATED ARE MINIMUM.
4. THE ENTIRE POLYPROPYLENE PLASTIC MATERIAL SURROUNDING THE REINFORCING STEEL BAR SHALL BE CAST MONOLITHICALLY. MINIMUM COVER SHALL BE 3/16-INCH.
5. STEP RUNGS SHALL BE SPACED AT A MAXIMUM OF 14 INCHES.
6. STEPS SHALL BE INSTALLED IN ACCORDANCE WITH THE APPROVED MANUFACTURERS RECOMMENDED PROCEDURE.

EVERETT **CITY OF EVERETT PUBLIC WORKS DEPARTMENT**	POLYPROPYLENE LADDER	8/10/2011 Date:
		606 COE Std Dwg:

T:\ACad\eps-coe design & constr specs for development\CURRENT\std detail dwgs\Dwg Files\STD606.dwg, 2/21/2014 2:35:43 PM

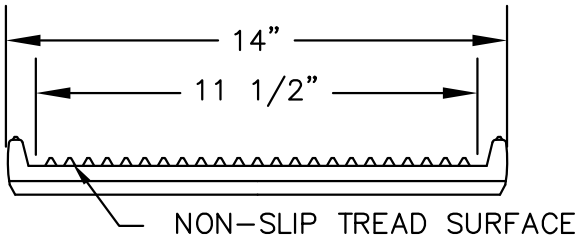

ELEVATION

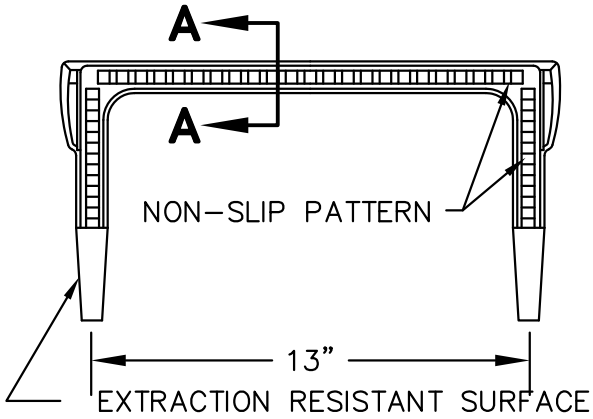

PLAN

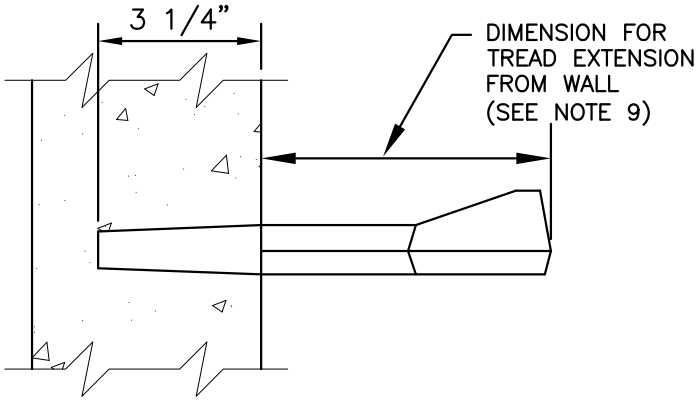

SIDE ELEVATION

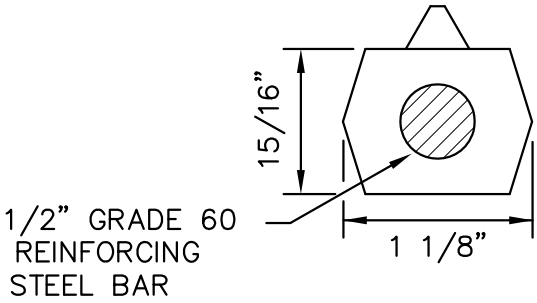

SECTION A-A

NOTES:

1. STEPS SHALL BE STEEL REINFORCED COPOLYMER POLYPROPYLENE PLASTIC CONFORMING TO:
   A. ASTM D 478 AND AASHTO M-199, MINIMUM HORIZONTAL PULLOUT RATING SHALL BE 1500 LBS.
   B. ASTM A 615 GRADE 60 (DEFORMED REINFORCING STEEL BAR).
2. ONLY STEPS APPROVED BY THE ENGINEER SHALL BE USED.
3. ALL FABRICATION DIMENSIONS INDICATED ARE MINIMUM.
4. THE MINIMUM TOTAL CROSS-SECTIONAL AREA OF THE EXPOSED PORTION OF THE STEP, INCLUDING THE 1/2-INCH DEFORMED REINFORCING STEEL BAR, AND EXCLUDING THE NON-SLIP TREAD SURFACE, SHALL BE ONE SQUARE INCH
5. THE ENTIRE POLYPROPYLENE PLASTIC MATERIAL SURROUNDING THE REINFORCING STEEL BAR SHALL BE CAST MONOLITHICALLY. MINIMUM COVER SHALL BE 3/16-INCH.
6. THE FOLLOWING DIMENSIONS SHALL APPLY UNLESS OTHERWISE NOTED ON THE DRAWINGS OR STANDARD PLANS FOR SPECIFIC STRUCTURES: D=6" ±1/4", E=3 1/4" ±1/4"
7. STEP RUNGS SHALL BE SPACED AT A MAXIMUM OF 14-INCHES.
8. STEPS SHALL BE INSTALLED IN ACCORDANCE WITH THE APPROVED MANUFACTURERS RECOMMENDED PROCEDURE.
9. STEPS IN THE CONE AND RISER SECTIONS WILL HAVE 6" EXTENSION FROM WALL. STEPS INSTALLED ABOVE CONE OR TOP SLAB SHALL BE A MAX OF 3" EXTENSION FROM WALL AND USED AS HANDHOLD. ALSO SEE 605A, 605B OR 605C.

CITY OF EVERETT PUBLIC WORKS DEPARTMENT	ALTERNATE POLYPROPYLENE PLASTIC STEP	8/10/2011 Date: 606A COE Std Dwg:

T:\ACad\eps-coe design & constr specs for development\CURRENT\std detail dwgs\Dwg Files\STD606A.dwg, 2/21/2014 2:36:26 PM

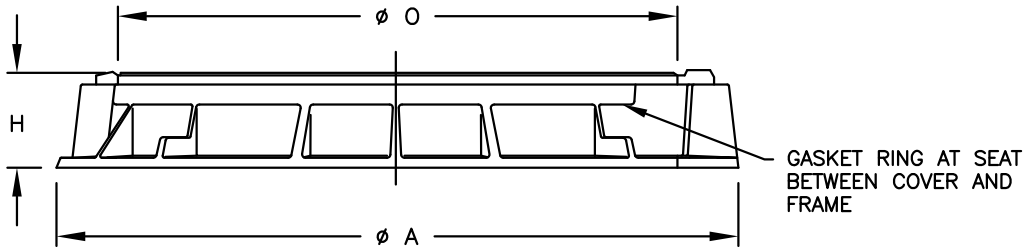

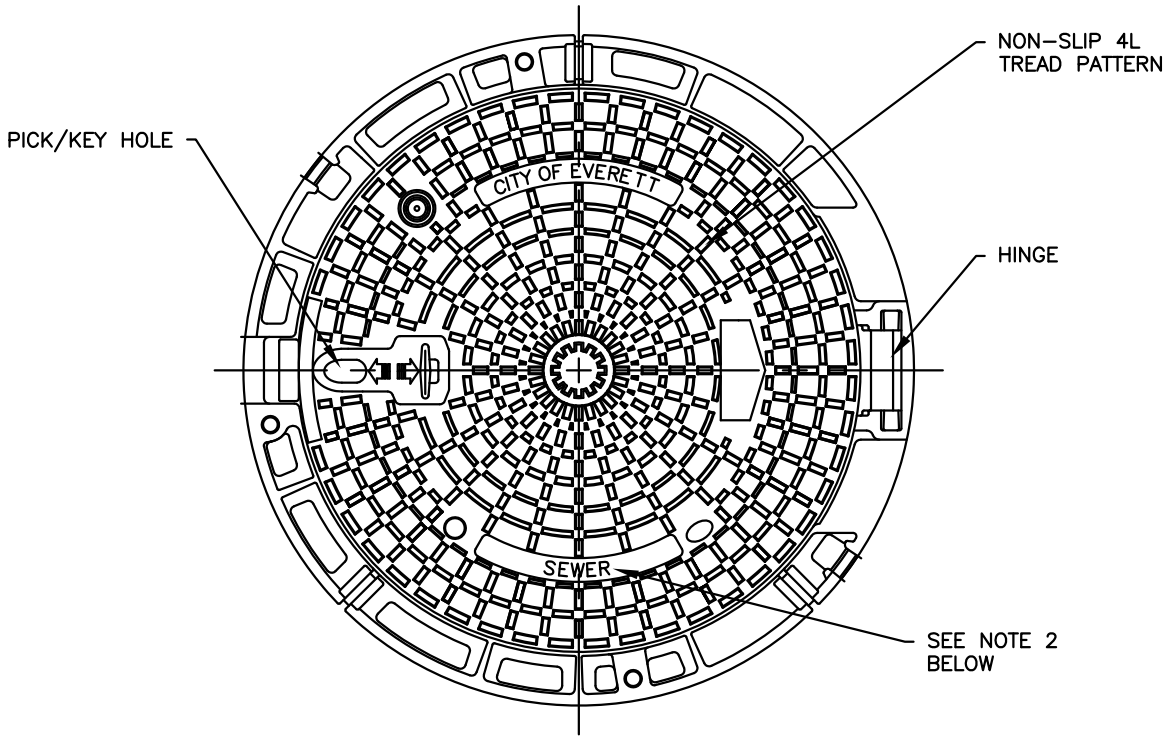

NOTES:

1. MANHOLE COVER AND FRAME SHALL BE AS MANUFACTURED BY PAMREX, EAST JORDAN IRON WORKS (EJIW) OR APPROVED EQUAL. COVER SHALL BE MANUFACTURED FROM DUCTILE IRON, ASTM A536.
2. COVER SHALL BE STAMPED "SEWER", OR "DRAINAGE" DEPENDING ON APPLICATION.
3. COVERS SHALL BE HINGED AND INCORPORATE A 90 DEGREE SAFETY CATCH BLOCKING SYSTEM TO PREVENT ACCIDENTAL CLOSURE AND REMOVABLE AT 120° OPEN. FRAME AND COVER SHALL EXCEED AASHTO H20, M306 OR M105 LOADINGS..
4. FRAMES SHALL BE CIRCULAR, INCORPORATE A SEATING RING AND A FITTED PLUG IN EACH HINGE HOUSING, AND BE AVAILABLE IN A 24 INCH MINIMUM CLEAR OPENING. THE STANDARD FRAME DEPTH SHALL NOT EXCEED 5 INCHES, AND THE FLANGE SHALL INCORPORATE BEDDING SLOTS, BOLT HOLES, AND LIFTING EYES.
5. SHALL BE USED FOR ALL NEW SEWER MANHOLES AND WHERE EXISTING STANDARD MANHOLE FRAME AND COVER ARE TO BE REPLACED.

DIMENSIONS (INCHES)			REFERENCE	MANUFACTURE
A	O	H		
33-1/2	24	4	CDPA60EH	PAMREX
34	24	4	00104042L01	EJIW

CITY OF EVERETT
PUBLIC WORKS DEPARTMENT

MANHOLE FRAME & COVER
"HINGED"

8/10/2011
Date:

607A
COE Std Dwg:

T:\ACad\eps-coe design & constr specs for development\CURRENT\std detail dwgs\Dwg Files\STD607A.dwg, 2/21/2014 2:37:51 PM

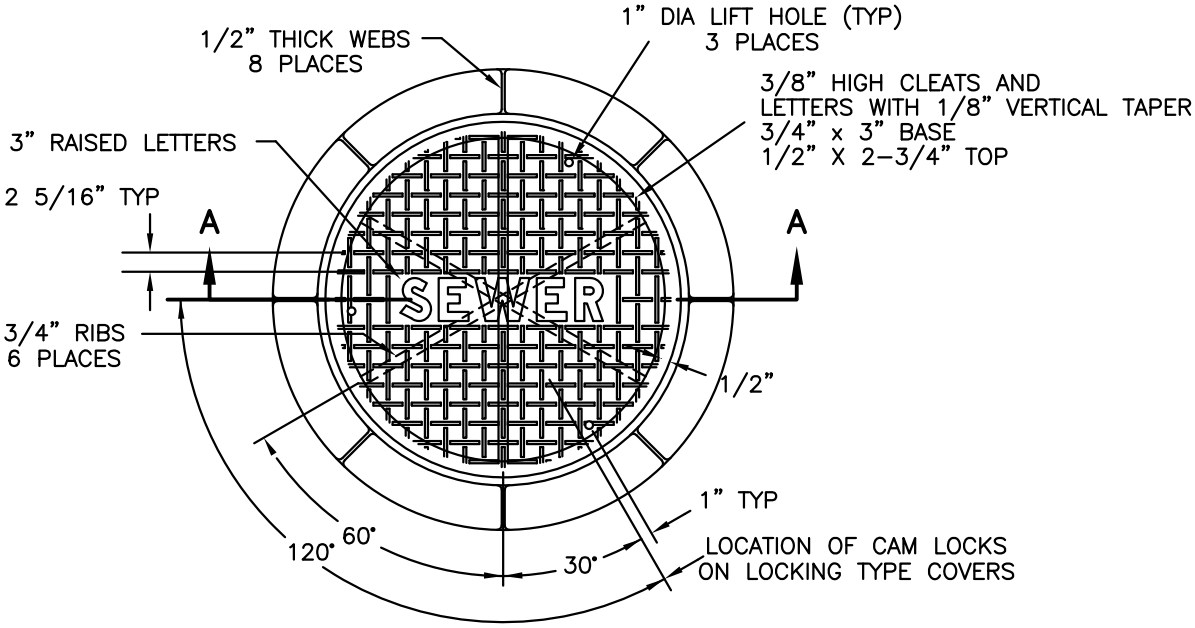

PLAN

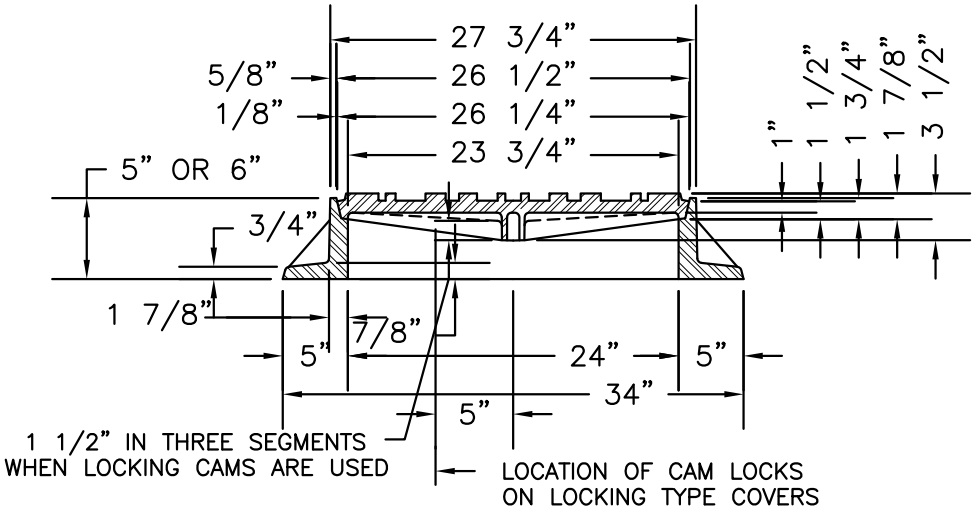

SECTION A–A

NOTES:

1. MANHOLE FRAMES SHALL BE GRAY IRON CONFORMING TO THE REQUIREMENTS OF AASHTO M 105, GRADE 30B.
2. MANHOLE COVER TO BE DUCTILE IRON CONFORMING TO ASTM A536, GR 80–55–06
3. LOCKING COVER TO BE USED AT OFF–STREET LOCATIONS AND OTHER LOCATIONS AS DIRECTED. THE COVER SHALL BE LOCKED DOWN WITH 3–5/8" S.S SOCKET HEAD CAP SCREWS.
4. FRAME AND COVER SHALL BE TESTED FOR ACCURACY OF FIT AND SHALL BE MARKED IN SETS FOR DELIVERY.
5. SHALL BE USED ONLY WHERE DIRECTED BY THE CITY OR APPROVED IN ADVANCE.

CITY OF EVERETT PUBLIC WORKS DEPARTMENT	MANHOLE FRAME & COVER "STANDARD"	8/10/2011 Date: 607B COE Std Dwg:

T:\ACad\eps-coe design & constr specs for development\CURRENT\std detail dwgs\Dwg Files\STD607B.dwg, 2/21/2014 2:38:41 PM

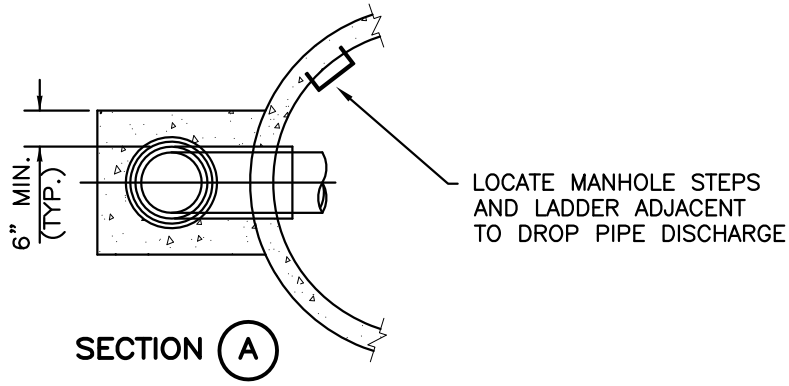

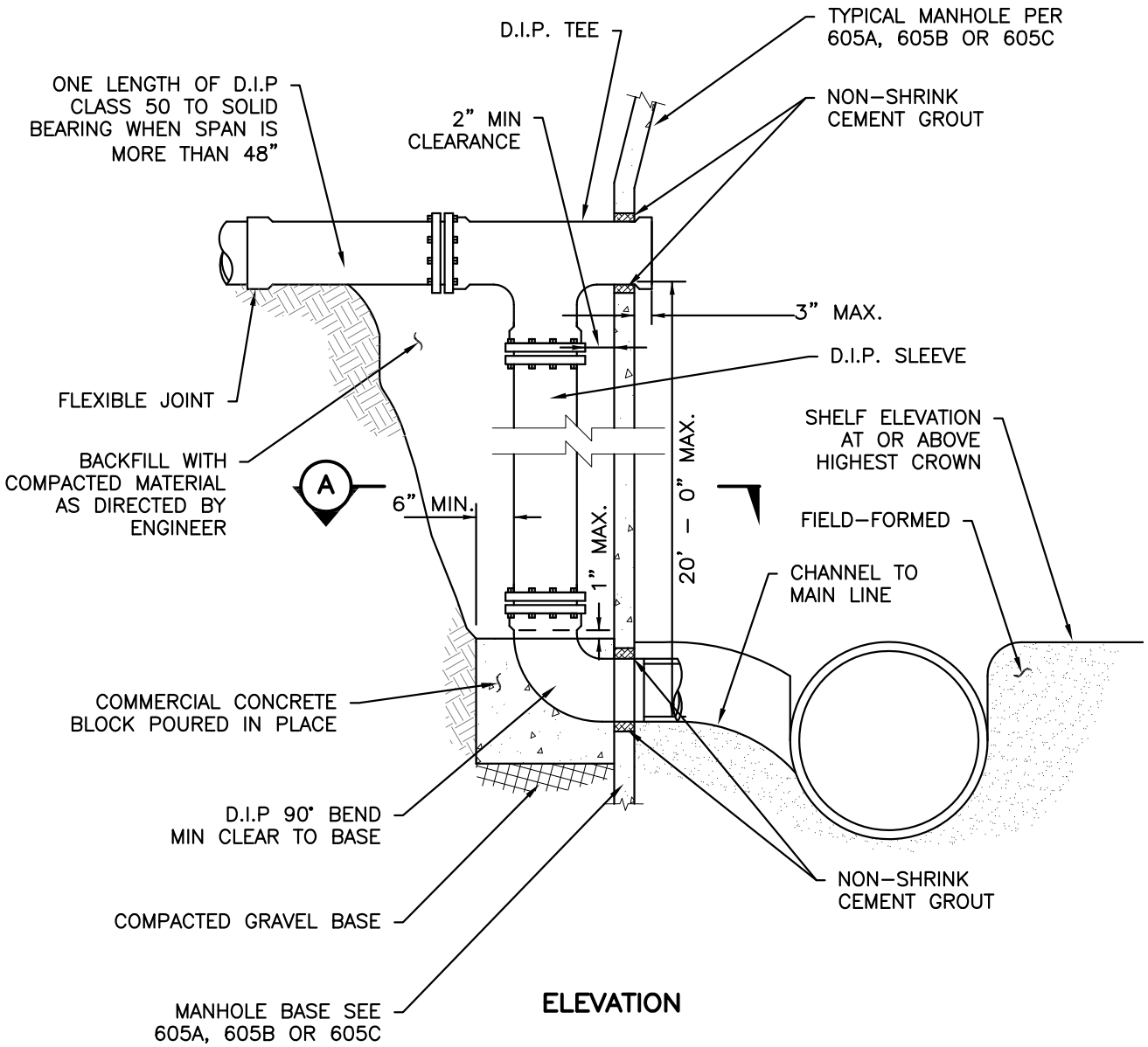

WSDOT STD PLAN B-85.50.00
ACCEPTABLE SUBSTITUTE

CITY OF EVERETT **PUBLIC WORKS DEPARTMENT**	OUTSIDE DROP MANHOLE CONNECTION DUCTILE IRON	8/10/2011 Date: 608 COE Std Dwg:

T:\ACad\eps-coe design & constr specs for development\CURRENT\std detail dwgs\Dwg Files\STD608.dwg, 2/21/2014 2:39:28 PM

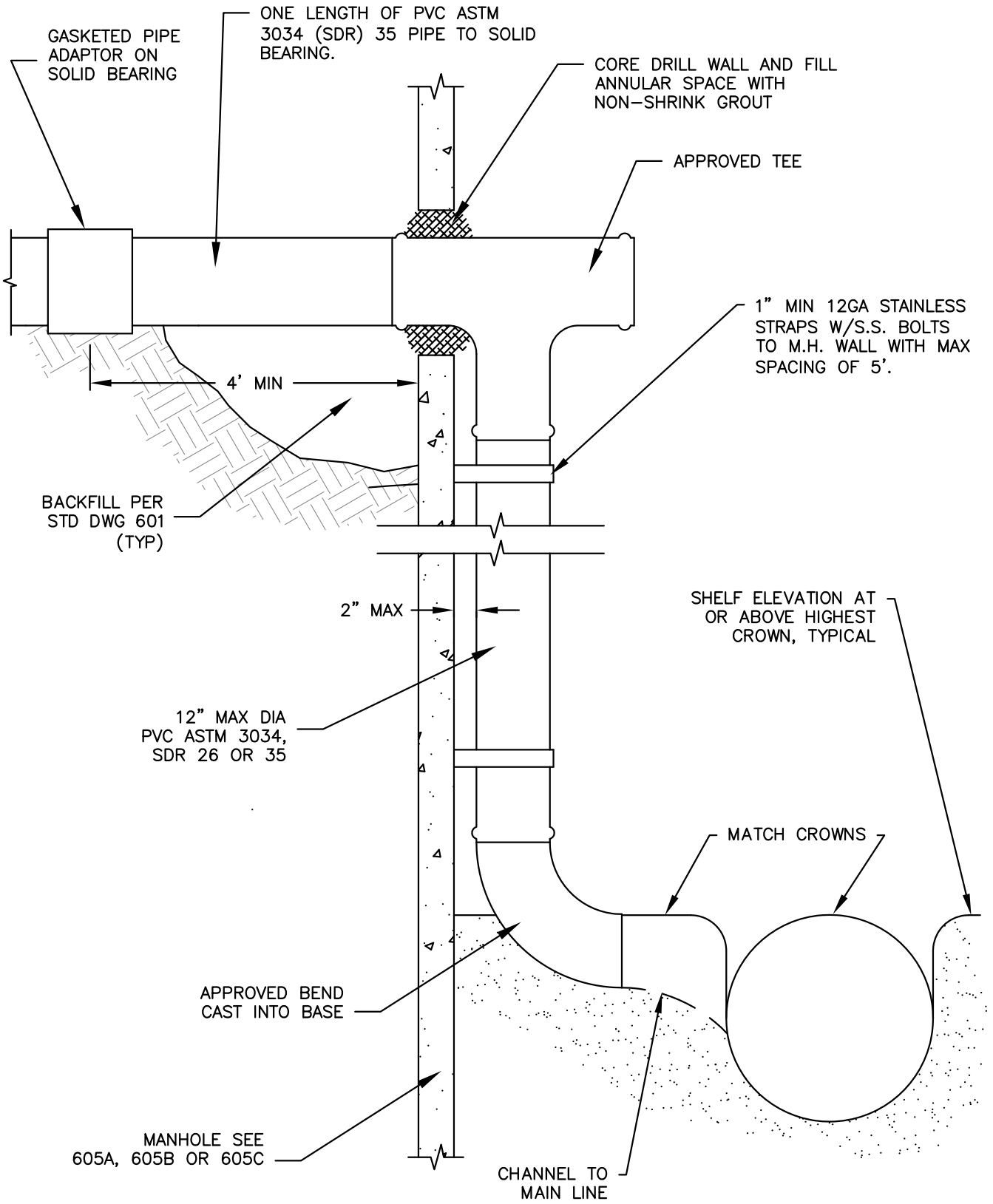

NOTE: LOCATE MANHOLE STEPS AND LADDER ADJACENT TO DROP PIPE DISCHARGE. SEE SEC "A" STD 608.

54" MINIMUM DIAMETER MANHOLE REQUIRED

CITY OF EVERETT **PUBLIC WORKS DEPARTMENT**	INSIDE DROP MANHOLE CONNECTION	8/10/2011 Date: 609 COE Std Dwg:

T:\ACad\eps-coe design & constr specs for development\CURRENT\std detail dwgs\Dwg Files\STD609.dwg, 2/21/2014 2:40:16 PM

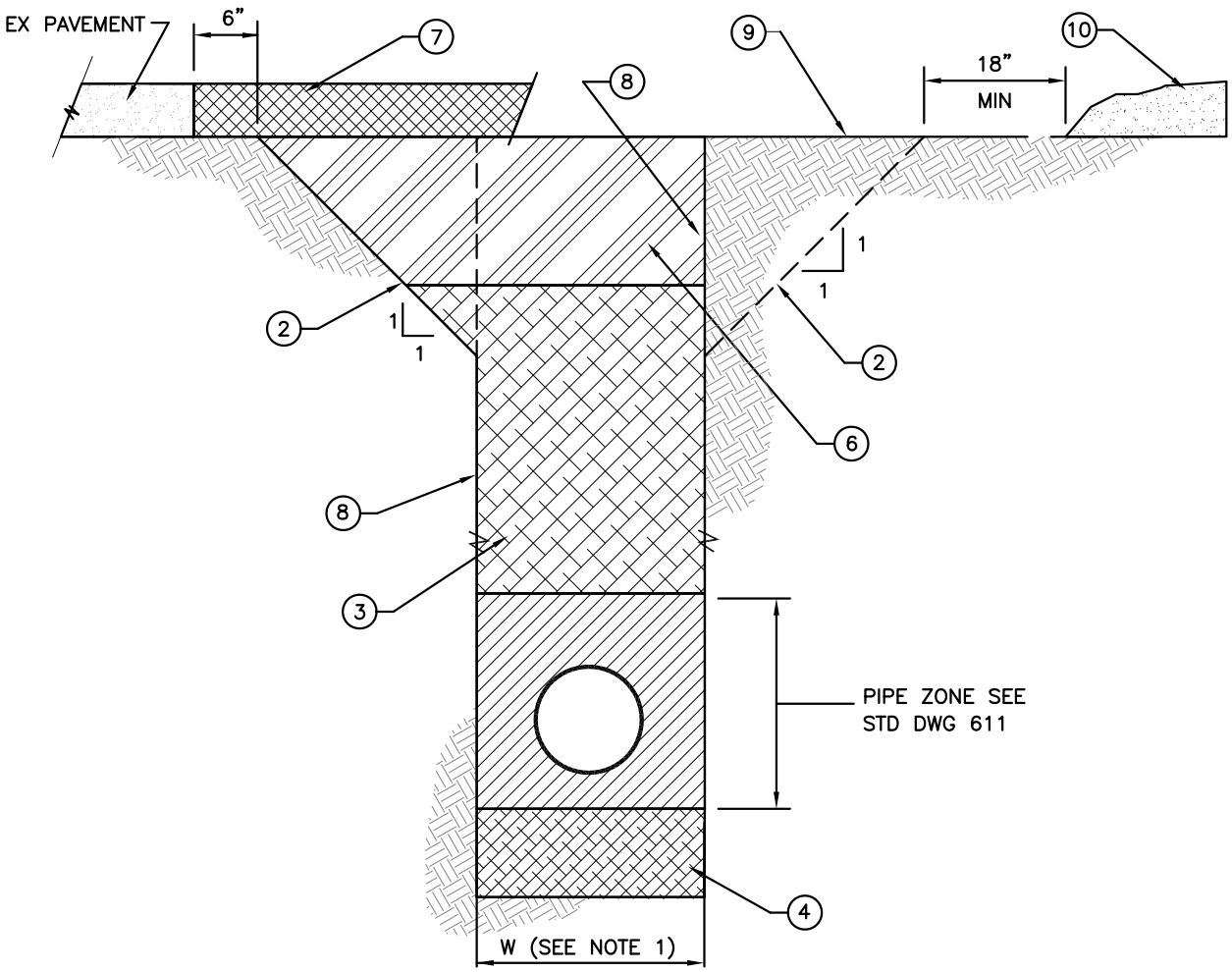

NOTES

1. W = MAXIMUM WIDTH OF TRENCH. FOR PIPES 15" OR LESS IN DIA W=40". FOR PIPES 18" OR GREATER W=1.5 x I.D. + 18". PIPE MUST BE CENTERED IN TRENCH.
2. ALTERNATE SLOPING TRENCH WALL TO MEET O.S.H.A. REQUIREMENTS (NO SLOPES STEEPER THAN 1:1 EXCEPT FOR ROCK).
3. SUITABLE NATIVE MATERIAL OR IMPORTED GRAVEL BORROW AS DIRECTED. COMPACT TO 90% MAXIMUM DENSITY.
4. FOUNDATION GRAVEL IF REQUIRED BY THE ENGINEER TO REPLACE UNSUITABLE MATERIAL. SHALL BE FOUNDATION MATERIAL CLASS A, B OR AS APPROVED BY THE ENGINEER.
5. FOR ADDITIONAL COMPACTION INFORMATION SEE STANDARD DWG 615.
6. IF DIRECTED BY THE ENGINEER THE TOP THREE TO FIVE FEET OF BACKFILL SHALL BE IMPORTED GRAVEL BORROW OR SUITABLE NATIVE MATERIAL COMPACTED TO 95% MAXIMUM DENSITY.
7. SEE CITY OF EVERETT STANDARD DWG 316 FOR PAVEMENT PATCH DETAILS.
8. VERTICAL TRENCH WALLS WITH SHORING TO CONFORM TO O.S.H.A. REGULATIONS.
9. SUBGRADE OR GROUND SURFACE IN NON–PAVED AREAS.
10. EXCAVATED NATIVE MATERIAL OR STOCKPILED BACKFILL MATERIAL.
11. FOR ALL TRENCHING TRANSVERSE TO THE ROADWAY BACKFILL ABOVE THE PIPE ZONE SHALL BE CONTROLLED DENSITY FILL. SEE SECTION 3–9.6 & 3–20.1 OF THESE STANDARDS.
12. FOR UTILITY CUTS SUCH AS GAS, TELEPHONE, POWER, AND CABLE TV LONGITUDINAL TO THE ROADWAY, BACKFILL SHALL BE CONTROLLED DENSITY FILL. SEE SECTION 3–9.5 OF THESE STANDARDS

EVERETT **CITY OF EVERETT PUBLIC WORKS DEPARTMENT**	TYPICAL TRENCH SECTION	8/10/2011 Date:
		610 COE Std Dwg:

T:\ACad\eps-coe design & constr specs for development\CURRENT\std detail dwgs\Dwg Files\STD610.dwg, 2/21/2014 2:41:22 PM

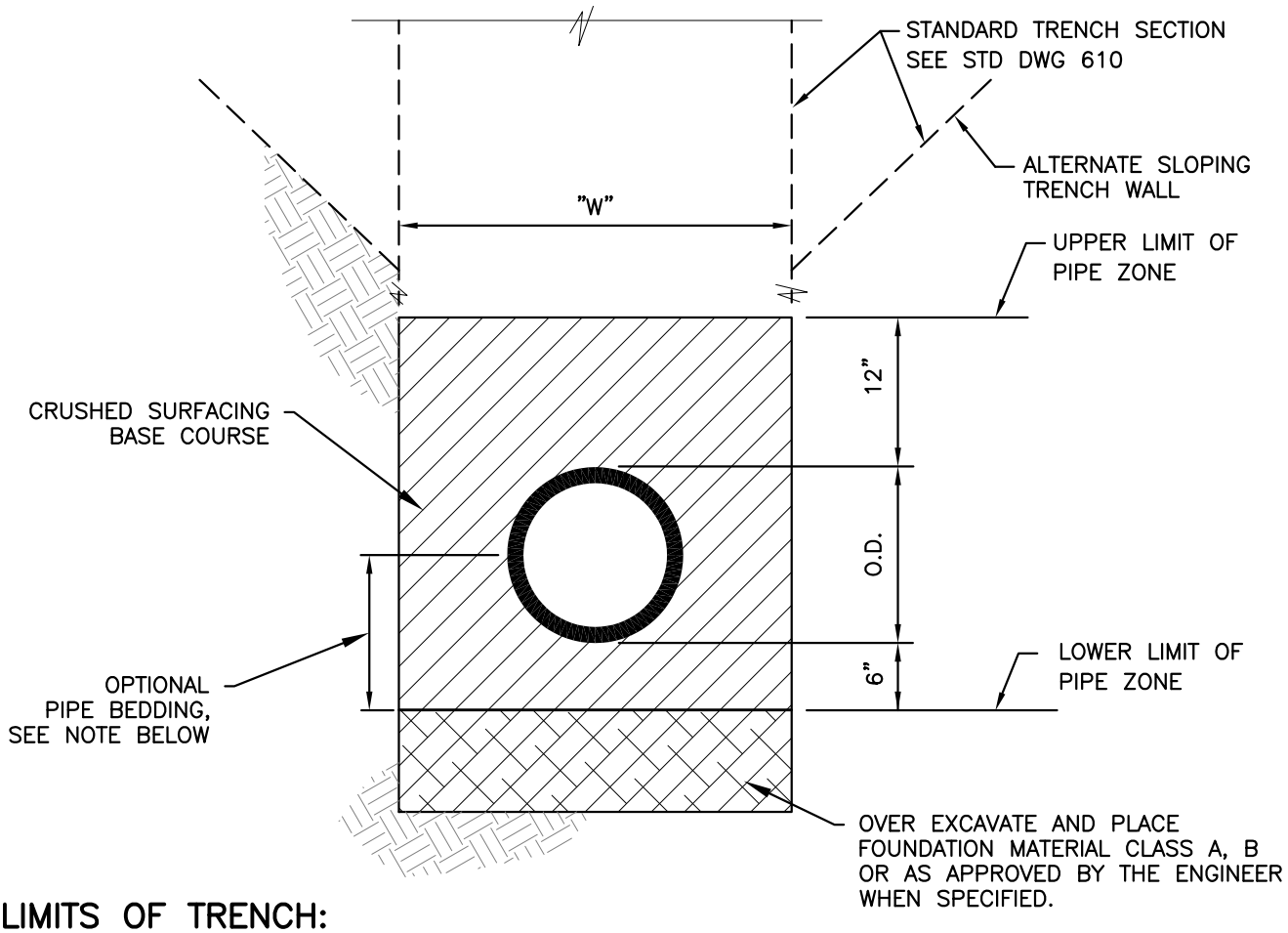

LIMITS OF TRENCH:

W = MAXIMUM WIDTH OF TRENCH. FOR PIPES 15" OR LESS IN DIAMETER W = 40". FOR PIPES 18" OR GREATER W = 1 1/2 x I.D. + 18". PIPE MUST BE CENTERED IN TRENCH.

BEDDING AND FOUNDATION MATERIALS:

PIPE BEDDING MATERIAL SHALL BE CRUSHED SURFACING BASE COURSE CONFORMING TO SECTION 9-03.9(3) OF THE STANDARD SPECIFICATIONS FOR ROAD, BRIDGE AND MUNICIPAL CONSTRUCTION WSDOT/APWA.

OPTIONAL PIPE BEDDING (TO SPRING-LINE) FOR PIPE 15" DIA AND LARGER: PEA GRAVEL OR 3/4" CLEAN ROCK CHIPS AS APPROVED IN ADVANCE BY ENGINEER.

OVER EXCAVATION AND PLACEMENT OF FOUNDATION MATERIAL, IF REQUIRED SHALL BE FOUNDATION MATERIAL CLASS A OR B CONFORMING TO SECTION 9-03.17 OF THE STANDARD SPECIFICATIONS FOR ROAD, BRIDGE AND MUNICIPAL CONSTRUCTION WSDOT/APWA.

PROCEDURE FOR COMPACTION:

PROVIDE UNIFORM SUPPORT UNDER PIPE BARREL.

COMPACT BEDDING MATERIAL TO 90% MAXIMUM DENSITY EXCEPT DIRECTLY OVER PIPE, HAND TAMP ONLY.

HAND TAMP UNDER PIPE HAUNCHES FOR ALL BEDDING MATERIALS.

FOR ADDITIONAL COMPACTION INFORMATION SEE STANDARD DWG 615.

CITY OF EVERETT PUBLIC WORKS DEPARTMENT	BEDDING FOR PIPE IN TRENCHES	8-10-2011 Date: 611 COE Std Dwg:

T:\ACad\eps-coe design & constr specs for development\CURRENT\std detail dwgs\Dwg Files\STD611.dwg, 2/21/2014 2:42:10 PM

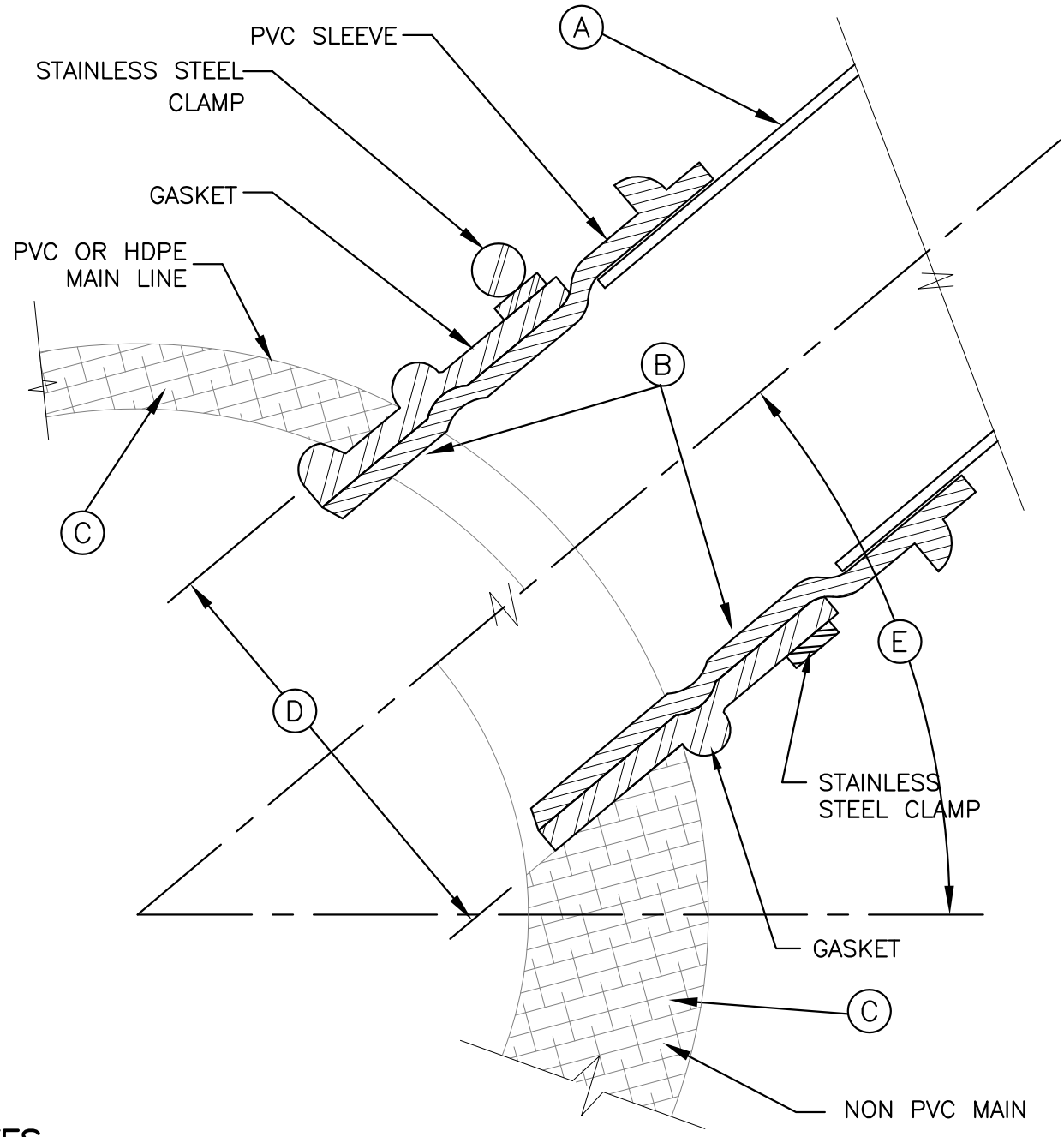

NOTES

(A) PVC SIDE SEWER. FOR REMAINDER OF PVC SERVICE SEE STD DWG 602.

(B) "INSERTA TEE" OR APPROVED EQUAL.

(C) EXISTING SANITARY SEWER MAIN.

(D) CORE DRILL EXISTING MAINLINE PIPE PER MFG'S SPECIFICATIONS.

(E) 35° MIN, 45° MAX

CITY OF EVERETT PUBLIC WORKS DEPARTMENT	TYPICAL SEWER CONNECTION TO EXISTING SEWER MAINS	8/10/2011 Date:
		612 COE Std Dwg:

T:\ACad\eps-coe design & constr specs for development\CURRENT\std detail dwgs\Dwg Files\STD612.dwg, 2/21/2014 2:42:52 PM

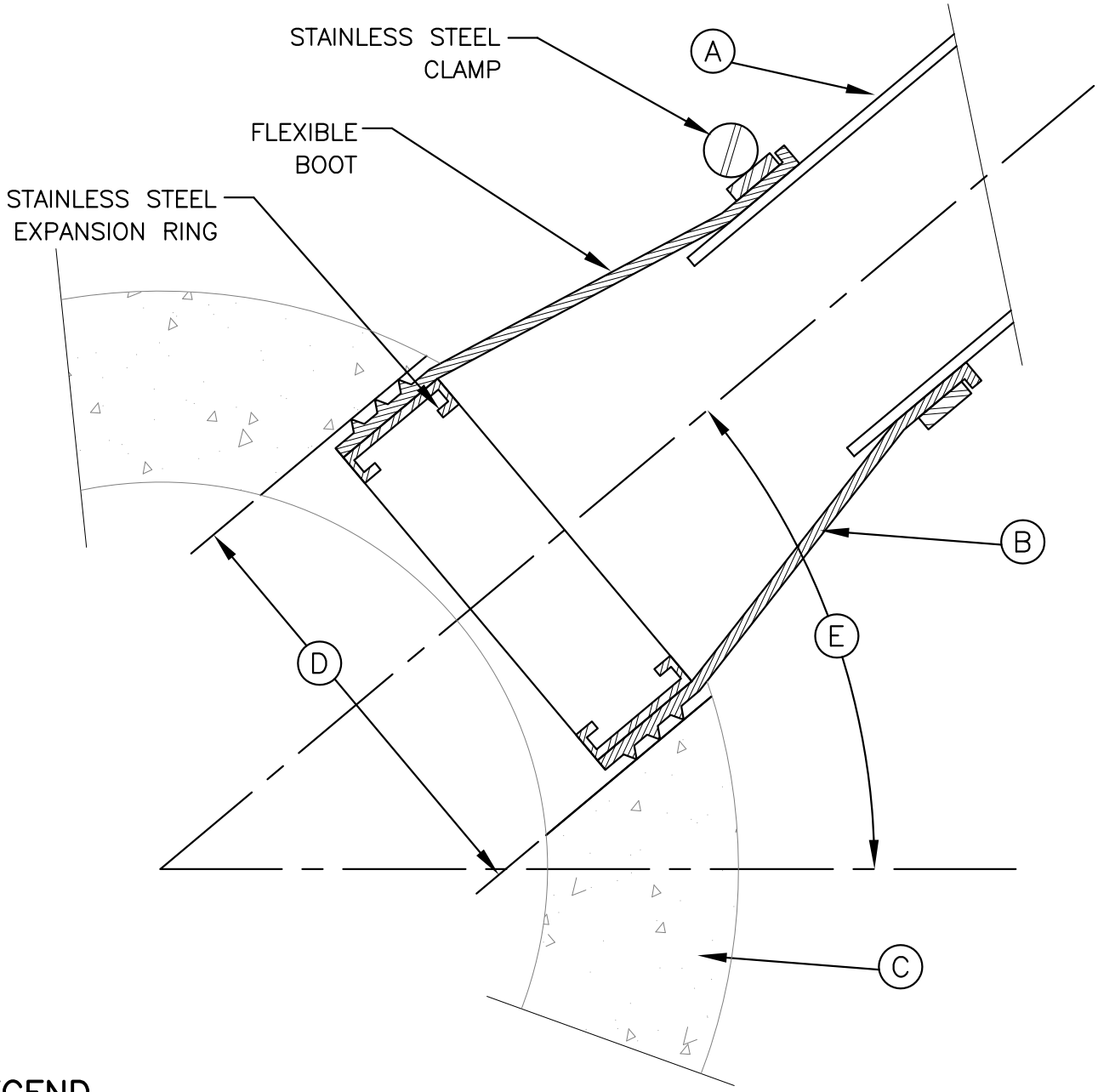

LEGEND

- (A) PVC SIDE SEWER. FOR REMAINDER OF PVC SERVICE SEE STD DWG 602.
- (B) "KOR-N-TEE" OR APPROVED EQUAL.
- (C) EXISTING OR NEW CONCRETE SANITARY SEWER MAIN.
- (D) CORE DRILL EXISTING MAINLINE PIPE PER MFG'S SPECIFICATIONS.
- (E) 35° MIN, 45° MAX

NOTES

1 USE OF THIS SEWER CONNECTION ALTERNATE MUST HAVE APPROVAL OF THE CITY ENGINEER ON A CASE BY CASE BASIS.

CITY OF EVERETT PUBLIC WORKS DEPARTMENT	ALTERNATE SEWER CONNECTION TO EXISTING/NEW CONCRETE SEWER MAIN	8-10-2011 Date: 613 COE Std Dwg:

T:\ACad\eps-coe design & constr specs for development\CURRENT\std detail dwgs\Dwg Files\STD613.dwg, 2/21/2014 2:43:34 PM

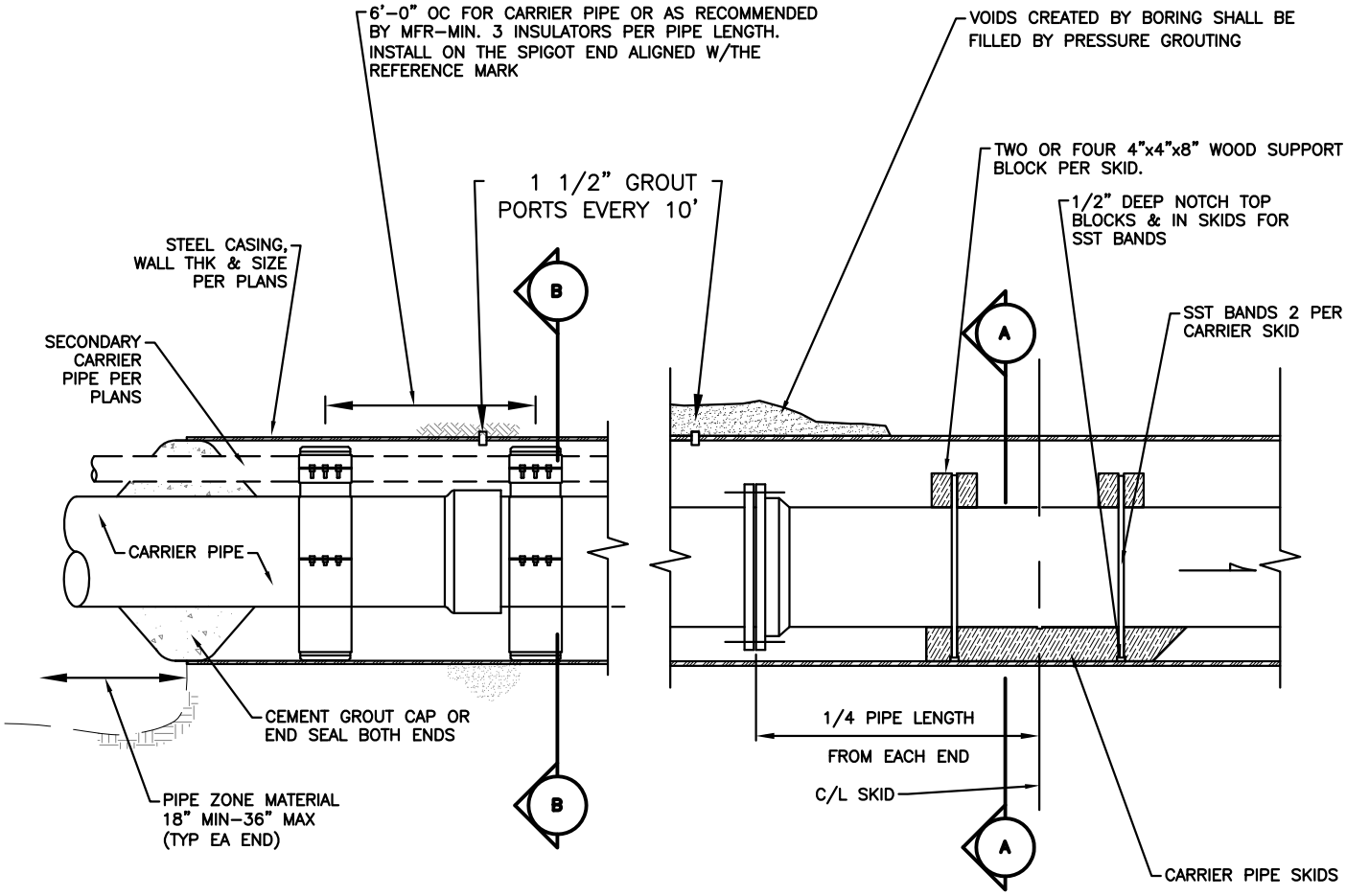

NOTES:

1. NEW ANSI/AWWA C200 STEEL CASING AS REQUIRED (SEE PLANS AND SPECIFICATIONS).
2. PROVIDE 1" MINIMUM CLEARANCE BETWEEN CASING AND CARRIER PIPE BELLS AND APPURTENANCES.
3. CONTRACTOR TO VERIFY CASING SIZES PRIOR TO ORDERING AND SIZING CASING INSULATORS.
4. ALL JOINTS OF CARRIER PIPE TO BE RESTRAINED.
5. CASING SHALL BE FILLED WITH FINE CLEAN DRY SAND CAREFULLY AIR BLOWN IN SUCH A WAY TO ELIMINATE ANY VOIDS.
6. BACKFILL BORE PIT ABOVE PIPE ZONE WITH SPECIFIED CLASS BACKFILL MATERIAL.
7. CASING, APPURTENANCES AND ALL OTHER MISCELLANEOUS ITEMS TO BE FURNISHED BY CONTRACTOR.

TYPICAL PVC BELL FITTING CARRIER PIPE SPACER INSTALLATION

NOTES:

1. ALL JOINTS OF CARRIER PIPE WITHIN CASING SHALL BE FLANGED (FL) OR MECHANICAL JOINT (MJ) FITTINGS WITH MEG-A-LUG RESTRAINTS.
2. CARRIER PIPE WILL BE PRESSURE TESTED BY CONTRACTOR AND TV INSPECTION BY CITY CREWS.
3. CARRIER SKIDS SHALL BE SECURELY ATTACHED TO CARRIER PIPE W/STAINLESS STEEL (SST) BANDS (MIN 2 BANDS PER SKID SET).
4. CARRIER SKIDS SHALL BE ROUNDED OR BEVELED ON LEADING EDGE, AND SHALL BE NOTCHED TO RECEIVE SST BANDS.
5. CARRIER SKIDS SHALL BE PRESSURE TREATED WOOD 4"x4"x48" (2 SETS OF 2 SKIDS PER LENGTH OF PIPE). CONTRACTOR MAY USE APPROVED PREFABRICATED SKIDS PROVIDED A 1" MIN CLEARANCE IS MAINTAINED BETWEEN JOINT FLANGE AND CASING.
6. SECONDARY CARRIER PIPES SHALL BE SECURED TO THE TOP OF THE MAIN CARRIER PIPE AS SHOWN.
7. SECONDARY CARRIER PIPE WILL BE TESTED BEFORE CASING ANNULAR SPACE IS FILLED.
8. END SEALS SHALL BE PROVIDED FOR THE JACKED CASING PIPES. THE END SEALS SHALL BE APS STANDARD MODEL AM AS MANUFACTURED BY ADVANCED PRODUCTS (WWW.APSONLINE.COM) OR APPROVED EQUIVALENT.
9. CASING, APPURTENANCES AND ALL OTHER MISCELLANEOUS ITEMS TO BE FURNISHED BY CONTRACTOR.

TYPICAL STEEL OR DUCTILE IRON CARRIER PIPE SPACER INSTALLATION

CITY OF EVERETT PUBLIC WORKS DEPARTMENT	CASING DETAIL PVC CARRIER PIPE W/SPACERS STEEL OR DI CARRIER PIPE SHT 1 OF 2	8/10/2011 Date: 614 COE Std Dwg:

T:\ACad\eps-coe design & constr specs for development\CURRENT\std detail dwgs\Dwg Files\STD614.dwg, 2/21/2014 2:44:31 PM

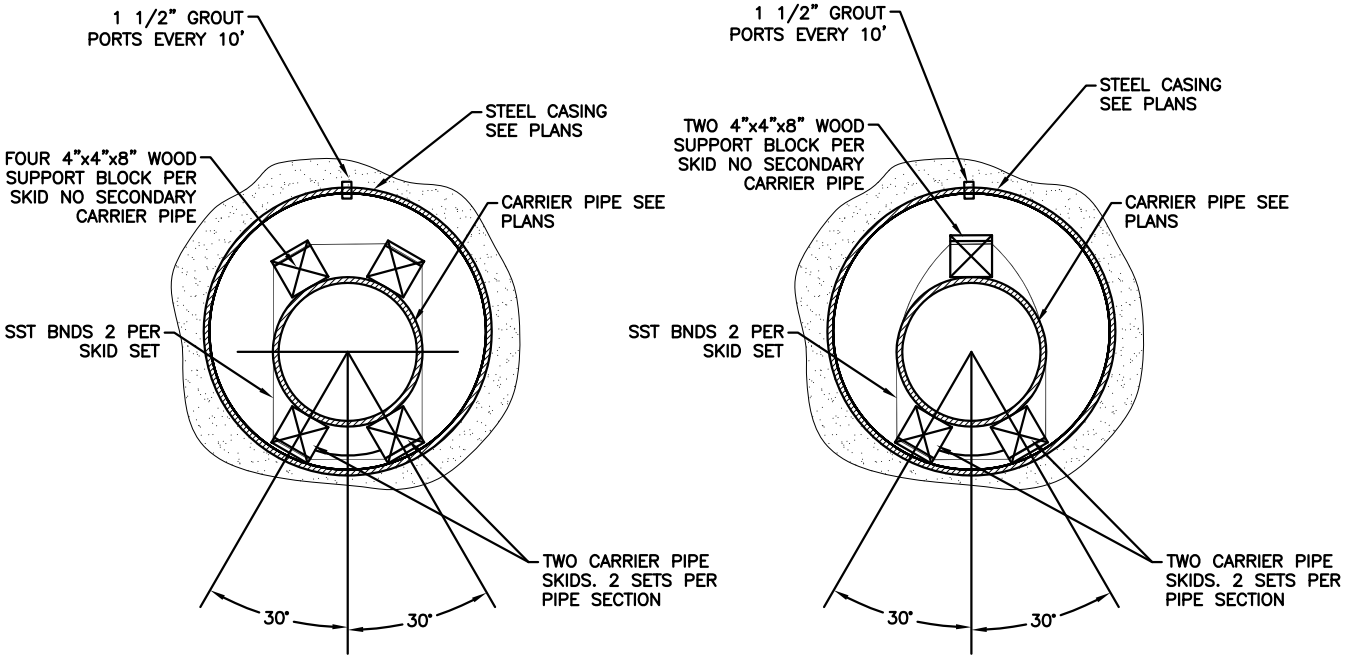

EXAMPLES OF FIELD ASSEMBLED CASING SKIDS

A FIELD FABRICATED SKID ASSY.
SCALE: N.T.S.

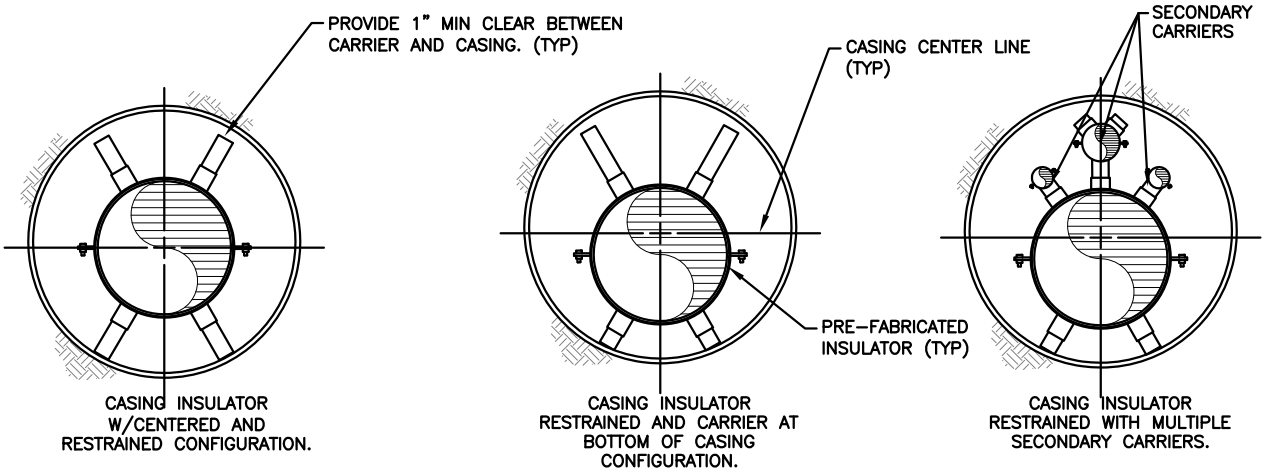

EXAMPLE OF PRE-FABRICATED SKIDS AND INSULATOR CONFIGURATIONS

B PRE-FABRICATED SKID ASSY.
SCALE: N.T.S.

CITY OF EVERETT PUBLIC WORKS DEPARTMENT	CASING DETAIL SECTIONS A & B SHT 2 OF 2	8/10/2011 Date: 614 COE Std Dwg:

T:\ACad\eps-coe design & constr specs for development\CURRENT\std detail dwgs\Dwg Files\STD614.dwg, 2/21/2014 2:44:55 PM

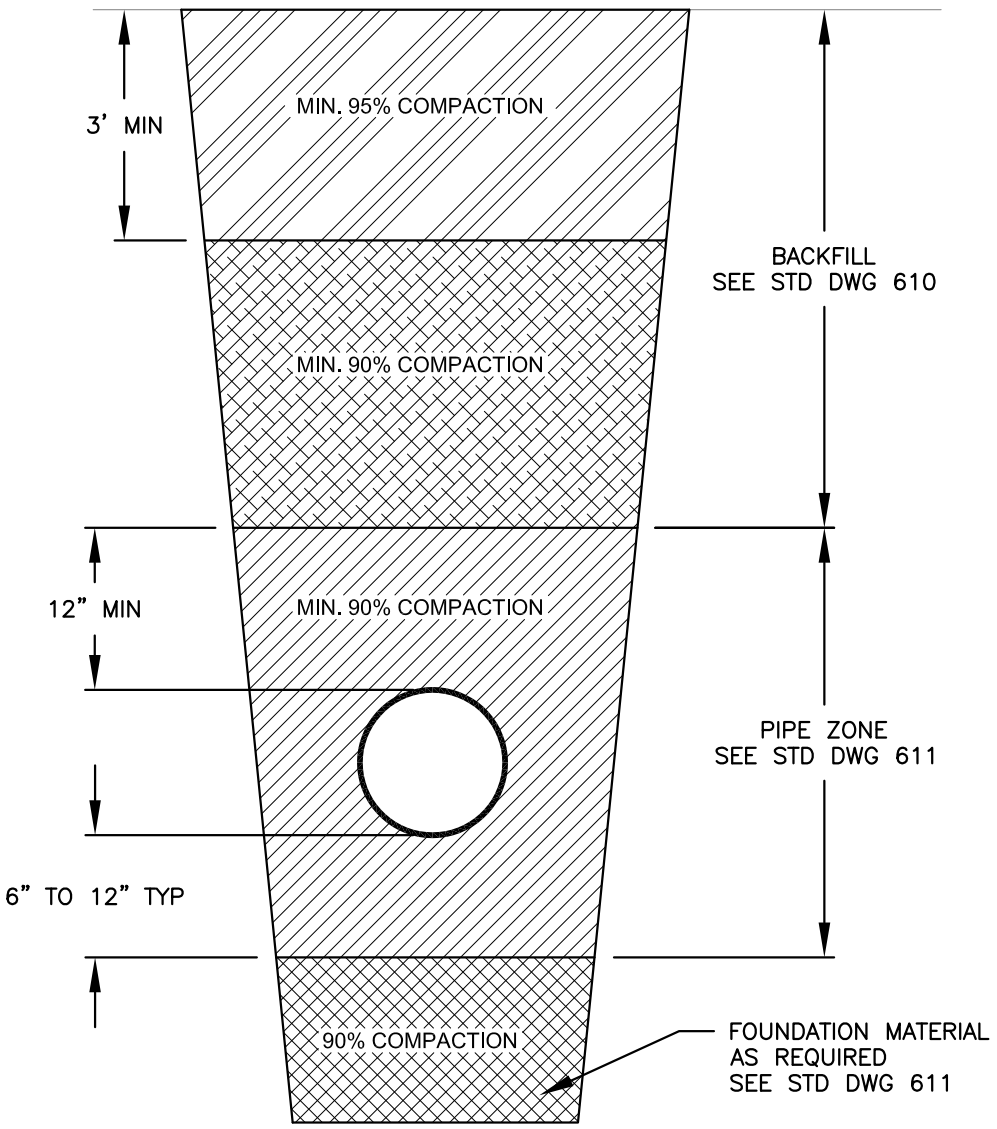

SECTION

NOTES:

1. ALL BACKFILL MATERIAL SHALL BE PLACED IN LIFTS NOT TO EXCEED 12 INCHES BEFORE COMPACTION UNLESS AUTHORIZED BY THE ENGINEER DUE TO THE CHARACTER OF THE MATERIAL AND THE COMPACTING EQUIPMENT.
2. MECHANICAL COMPACTION OF BACK FILL MATERIAL SHALL NOT BEGIN UNTIL THE DEPTH OF COMPACTED BACKFILL MATERIAL IS 2 FEET ABOVE THE TOP OF PIPE.
3. EACH LIFT SHALL BE MECHANICALLY COMPACTED TO THE REQUIRED DENSITY PRIOR TO PLACING SUBSEQUENT LIFTS OF BACKFILL MATERIAL.
4. COMPACTION TESTS SHALL BE AS REQUIRED BY THE CITY ENGINEER, BUT IN NO CASE LESS THAN 2 TESTS EVERY 200 FEET OF TRENCH (ONE AT SUBGRADE AND ONE AT 50% OF TRENCH DEPTH).
5. IN PLACE DENSITY AND MOISTURE CONTENT WILL BE DETERMINED USING NUCLEAR METHOD, ASTM 2922-71.
6. LABORATORY MAXIMUM DRY DENSITY AND OPTIMUM MOISTURE CONTENT WILL BE DETERMINED USING THE MODIFIED PROCTOR METHOD IN ACCORDANCE WITH ASTM D-1557.

EVERETT **CITY OF EVERETT** **PUBLIC WORKS DEPARTMENT**	TYPICAL TRENCH COMPACTION	8-10-2011 Date: 615 COE Std Dwg:

T:\ACad\eps-coe design & constr specs for development\CURRENT\std detail dwgs\Dwg Files\STD615.dwg, 2/21/2014 2:45:46 PM

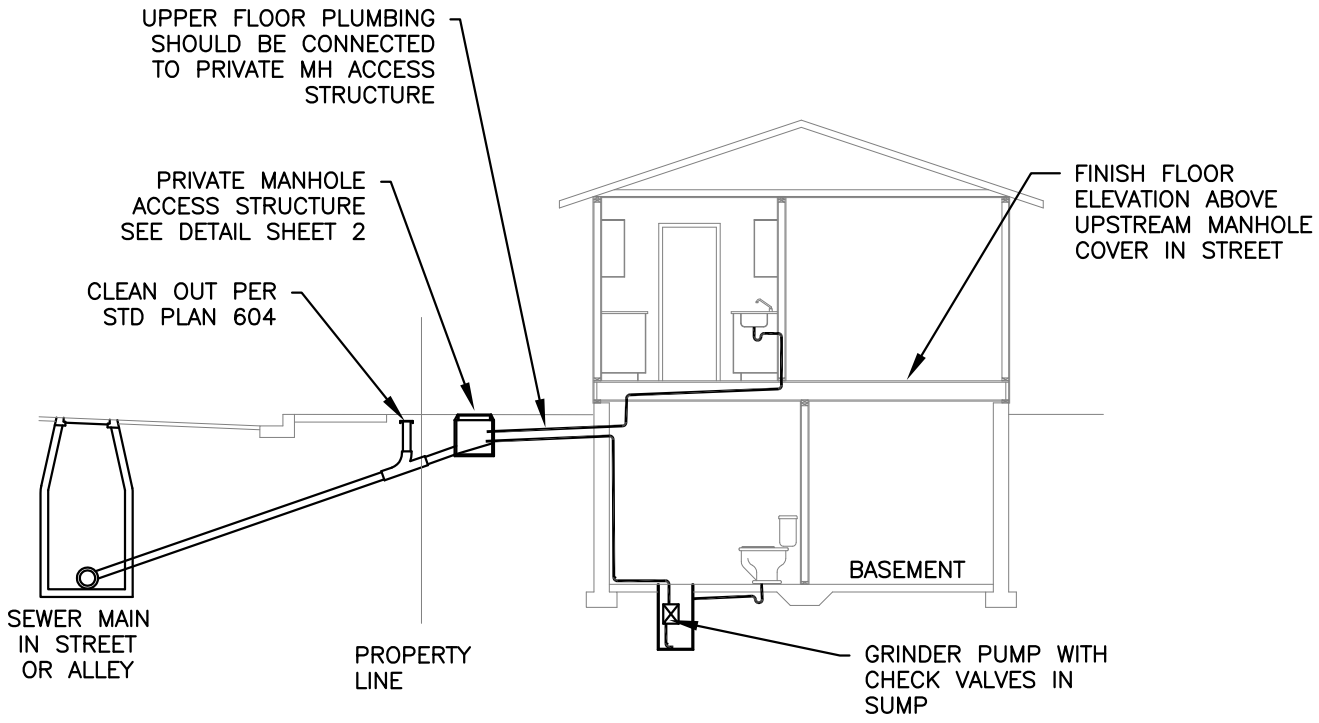

GRINDER PUMP INSIDE HOUSE

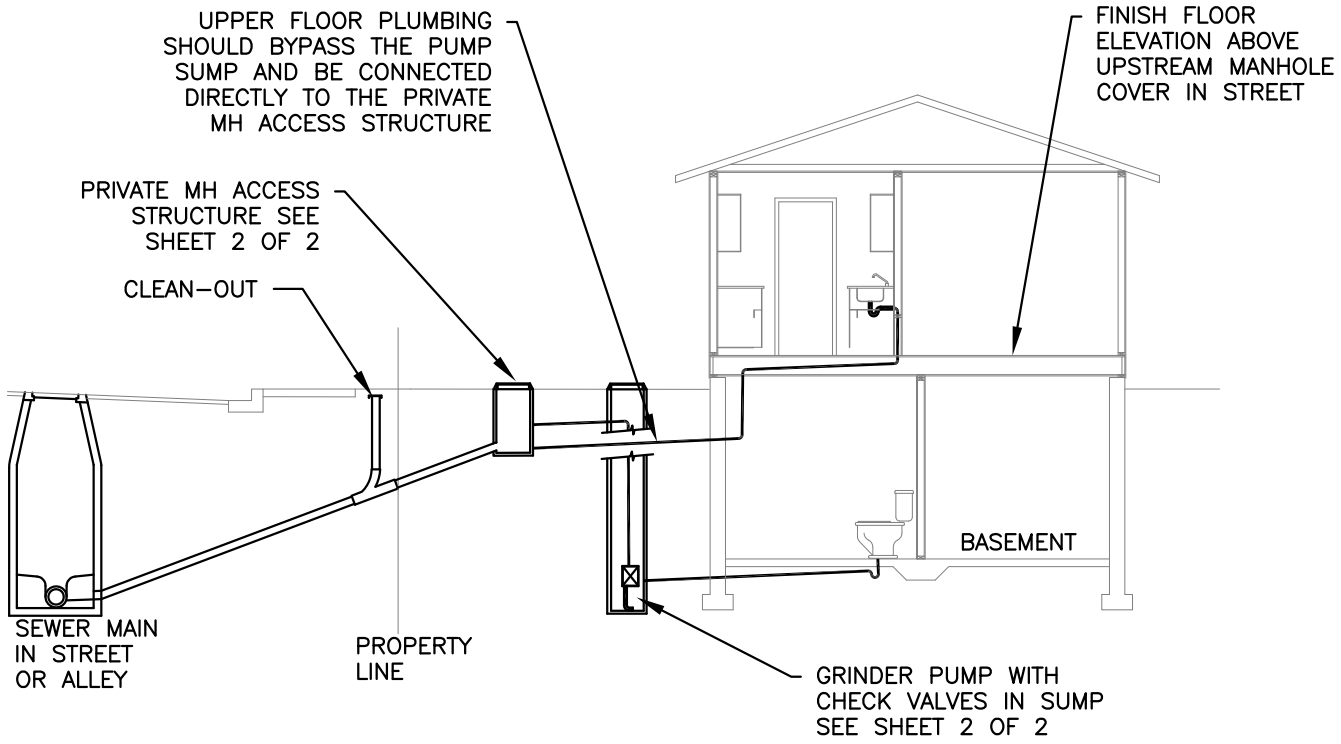

GRINDER PUMP OUTSIDE HOUSE

CITY OF EVERETT **PUBLIC WORKS DEPARTMENT**	GRINDER PUMP CONNECTION TO SANITARY SEWER PUMP INSIDE OR OUTSIDE HOUSE SHT 1 OF 2	8-12-2011 Date: 616 COE Std Dwg:

T:\ACad\eps-coe design & constr specs for development\CURRENT\std detail dwgs\Dwg Files\STD616.dwg, 2/21/2014 2:46:38 PM

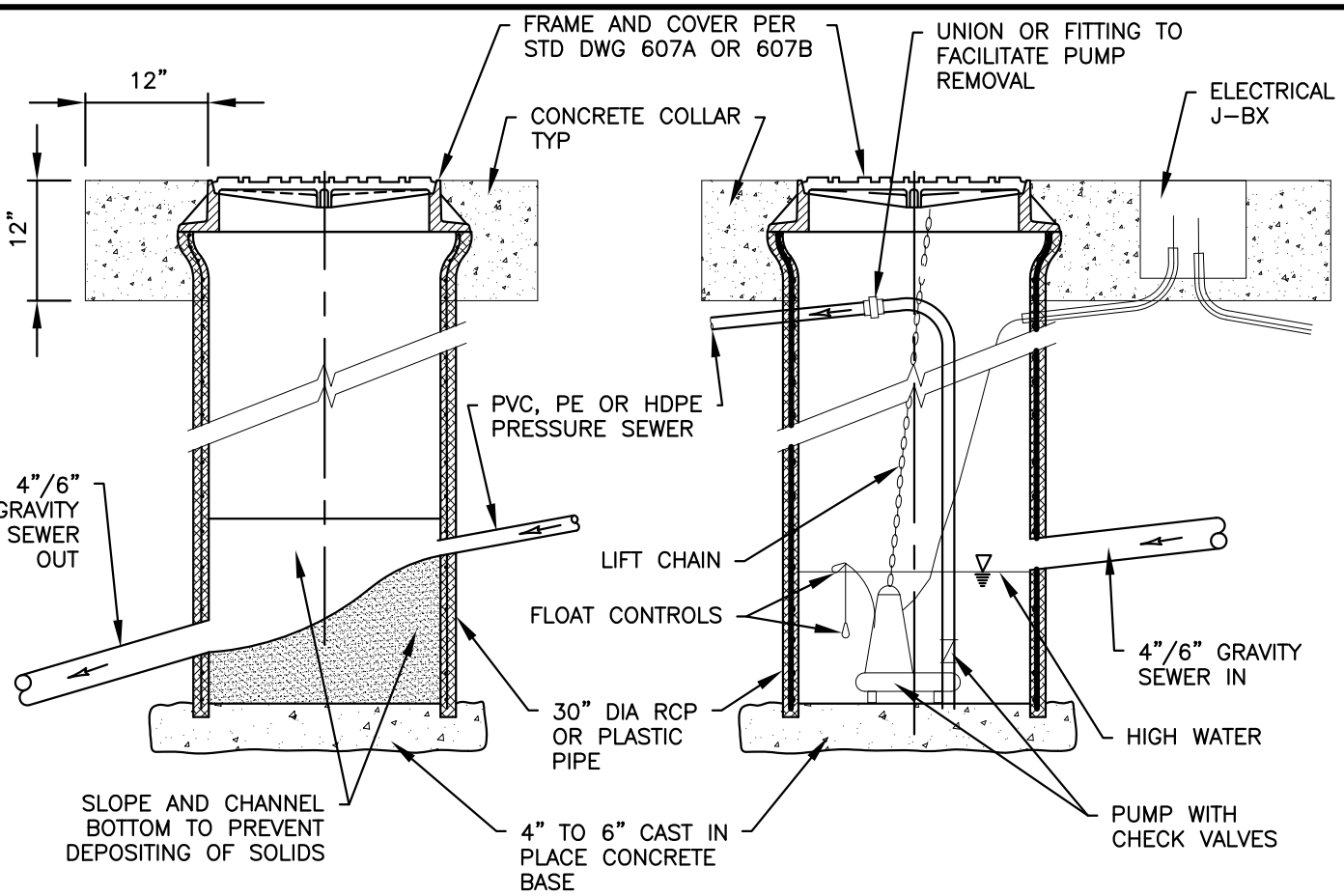

PRIVATE MH ACCESS STRUCTURES **GRINDER PUMP IN SUMP**

PRIVATE MH ACCESS STRUCTURES

NOTES:

1. PUMP SHALL BE INSTALLED PER MANUFACTURERS SPECIFICATIONS.
2. ANY PLUMBING WITHIN THE BUILDING MUST COMPLY WITH THE CURRENT UNIFORM PLUMBING CODE AS AMENDED BY THE STATE OF WASH..
3. THE SIDE-SEWER OUTSIDE THE BUILDING MUST COMPLY WITH THE CITY'S DESIGN AND CONSTRUCTION STANDARDS.
4. OTHER METHODS FOR BACK-WATER PREVENTION MUST BE APPROVED BY THE CITY.
5. PRIVATE MH ACCESS STRUCTURE MUST BE WATERTIGHT, CORROSION RESISTANT & SUITABLE FOR UNDERGROUND BURIAL. COVER MUST BE GAS-TIGHT, LOAD-SUPPORTING AND REMOVABLE. RECOMMENDED STRUCTURE IS 30" DIA REINFORCED CONCRETE WITH BELL UP. PROVIDE MANHOLE (MH) FRAME AND COVER (STD 607A OR 607B).
6. COMMERCIALLY MFD FRP PUMP WITH SUMP IS ALSO SUITABLE.

CITY OF EVERETT PUBLIC WORKS DEPARTMENT	GRINDER PUMP CONNECTION TO SANITARY SEWER OUTSIDE PUMP ACCESS & SUMP SHT 2 OF 2	8-12-2011 Date: 616 COE Std Dwg:

T:\ACad\eps-coe design & constr specs for development\CURRENT\std detail dwgs\Dwg Files\STD616.dwg, 2/21/2014 2:46:58 PM

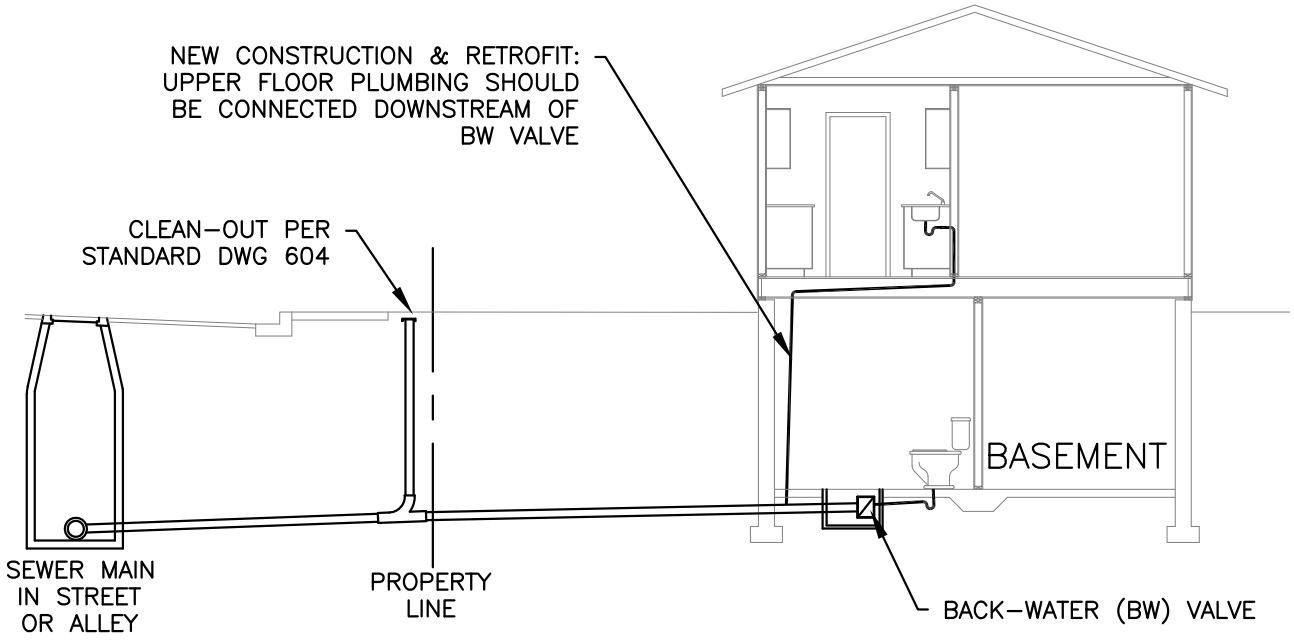

BACKWATER VALVE INSIDE HOUSE/BASEMENT

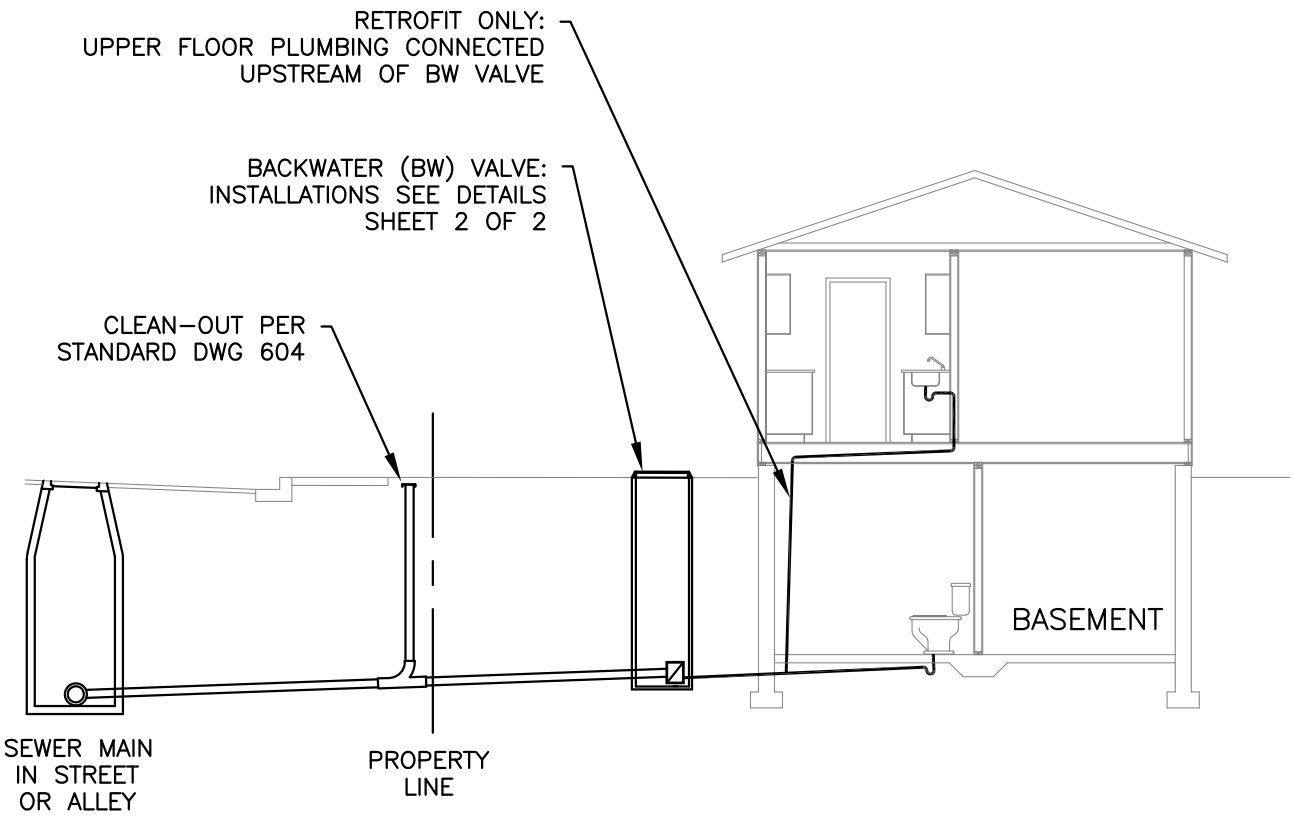

BACKWATER VALVE OUTSIDE HOUSE

CITY OF EVERETT
PUBLIC WORKS DEPARTMENT

BACKWATER VALVE CONNECTION TO SANITARY SEWER
INSIDE & OUTSIDE INSTALLATIONS
SHT 1 OF 2

8-12-2011
Date:

617
COE Std Dwg:

T:\ACad\eps-coe design & constr specs for development\CURRENT\std detail dwgs\Dwg Files\STD617.dwg, 2/21/2014 2:47:39 PM

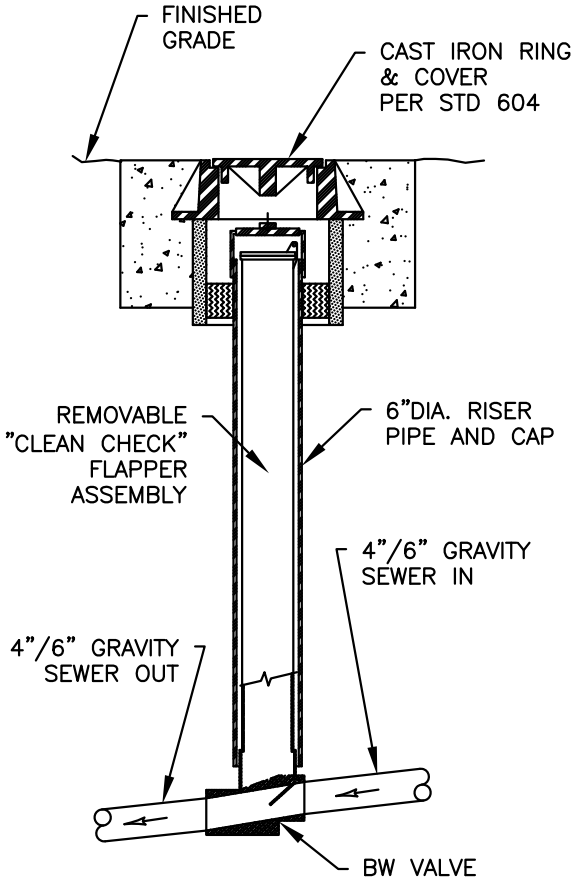

ALTERNATE "CLEAN–CHECK" INSTALLATION

CITY RECOMMENDS "CLEAN CHECK" BY RECTORSEAL WITH REMOVEABLE INSERT/FLAPPER ASSY.

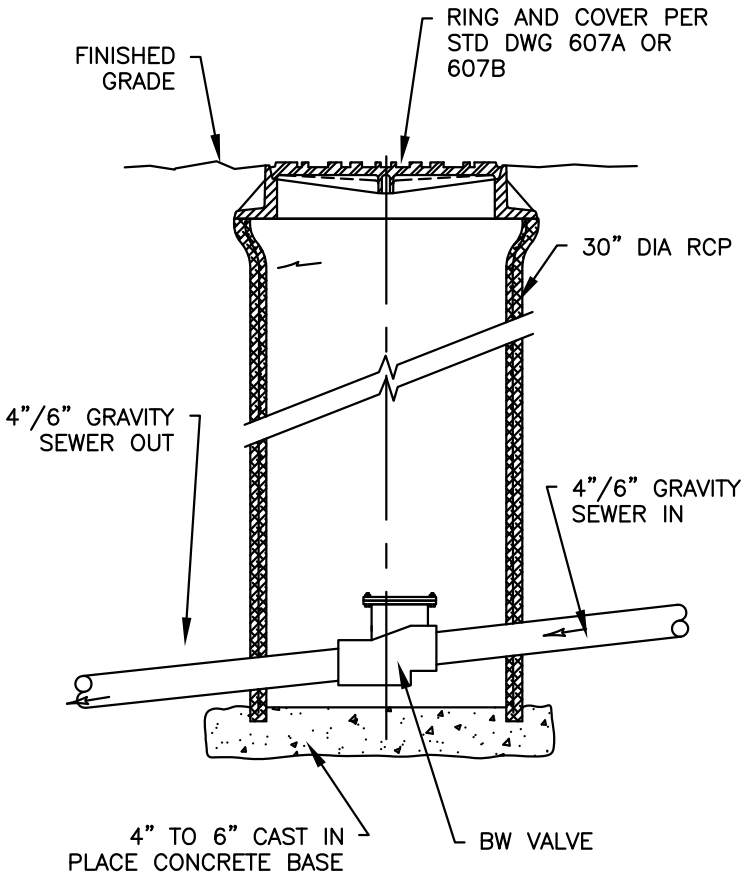

PRIVATE MH ACCESS INSTALLATION

NOTES:

1. ANY PLUMBING WITHIN THE BUILDING MUST COMPLY WITH THE CURRENT UNIFORM PLUMBING CODE AS AMENDED BY THE STATE OF WASH..
2. THE SIDE–SEWER OUTSIDE THE BUILDING MUST COMPLY WITH THE CITY'S DESIGN AND CONSTRUCTION STANDARDS.
3. OTHER METHODS FOR BACK–WATER PREVENTION MUST BE APPROVED BY THE CITY.
4. PRIVATE MH ACCESS STRUCTURE MUST BE WATERTIGHT, CORROSION RESISTANT & SUITABLE FOR UNDERGROUND BURIAL. COVER MUST BE GAS–TIGHT LOAD–SUPPORTING AND REMOVABLE. RECOMMENDED STRUCTURE IS 30" DIA REINFORCED CONCRETE PIPE (RCP) PLACED VERTICAL ON CAST IN PLACE (CIP) CONCRETE BASE WITH BELL UP. PROVIDE MANHOLE (MH) FRAME AND COVER (STD 607A OR 607B).

CITY OF EVERETT PUBLIC WORKS DEPARTMENT	BACK–WATER VALVE CONNECTION TO SANITARY SEWER ACCESS INSTALLATIONS SHT 2 OF 2	8-12-2011 Date: 617 COE Std Dwg:

T:\ACad\eps-coe design & constr specs for development\CURRENT\std detail dwgs\Dwg Files\STD617.dwg, 2/21/2014 2:48:01 PM

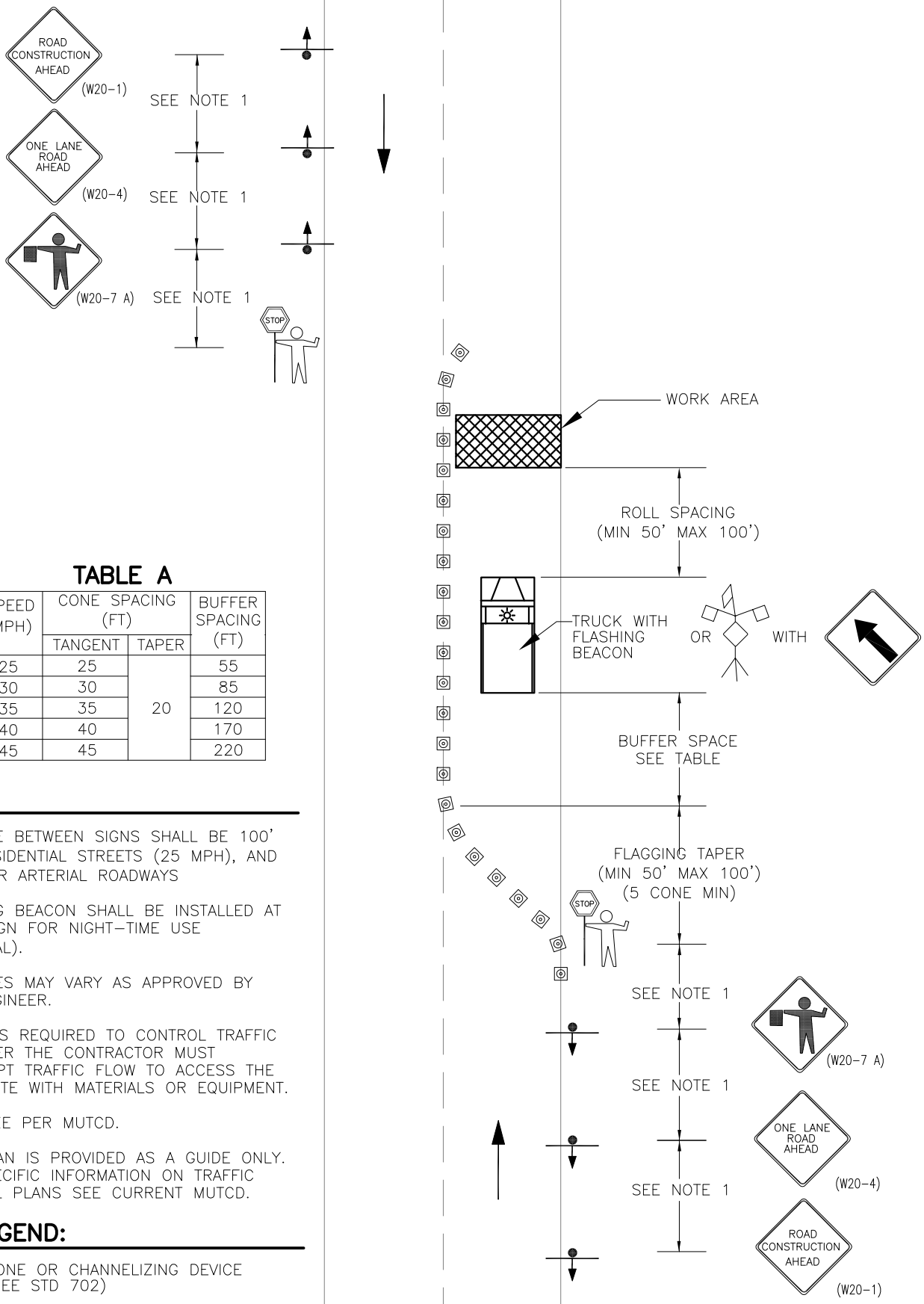

TABLE A

SPEED (MPH)	CONE SPACING (FT)		BUFFER SPACING (FT)
	TANGENT	TAPER	
25	25	20	55
30	30		85
35	35		120
40	40		170
45	45		220

NOTE:

1. DISTANCE BETWEEN SIGNS SHALL BE 100' FOR RESIDENTIAL STREETS (25 MPH), AND 350' FOR ARTERIAL ROADWAYS
2. FLASHING BEACON SHALL BE INSTALLED AT EACH SIGN FOR NIGHT-TIME USE (OPTIONAL).
3. DISTANCES MAY VARY AS APPROVED BY THE ENGINEER.
4. FLAGGERS REQUIRED TO CONTROL TRAFFIC WHENEVER THE CONTRACTOR MUST INTERRUPT TRAFFIC FLOW TO ACCESS THE WORK SITE WITH MATERIALS OR EQUIPMENT.
5. SIGN SIZE PER MUTCD.
6. THIS PLAN IS PROVIDED AS A GUIDE ONLY. FOR SPECIFIC INFORMATION ON TRAFFIC CONTROL PLANS SEE CURRENT MUTCD.

LEGEND:

◎ CONE OR CHANNELIZING DEVICE (SEE STD 702)

CITY OF EVERETT
PUBLIC WORKS DEPARTMENT

Traffic Control Plan
2 Lane Roadway: One Lane Closed With Alternating One-Way Traffic and Flaggers

12-24-2003
Date:

701A
COE Std Dwg:

T:\ACad\eps-coe design & constr specs for development\CURRENT\std detail dwgs\Dwg Files\STD701A.dwg, 2/21/2014 2:49:19 PM

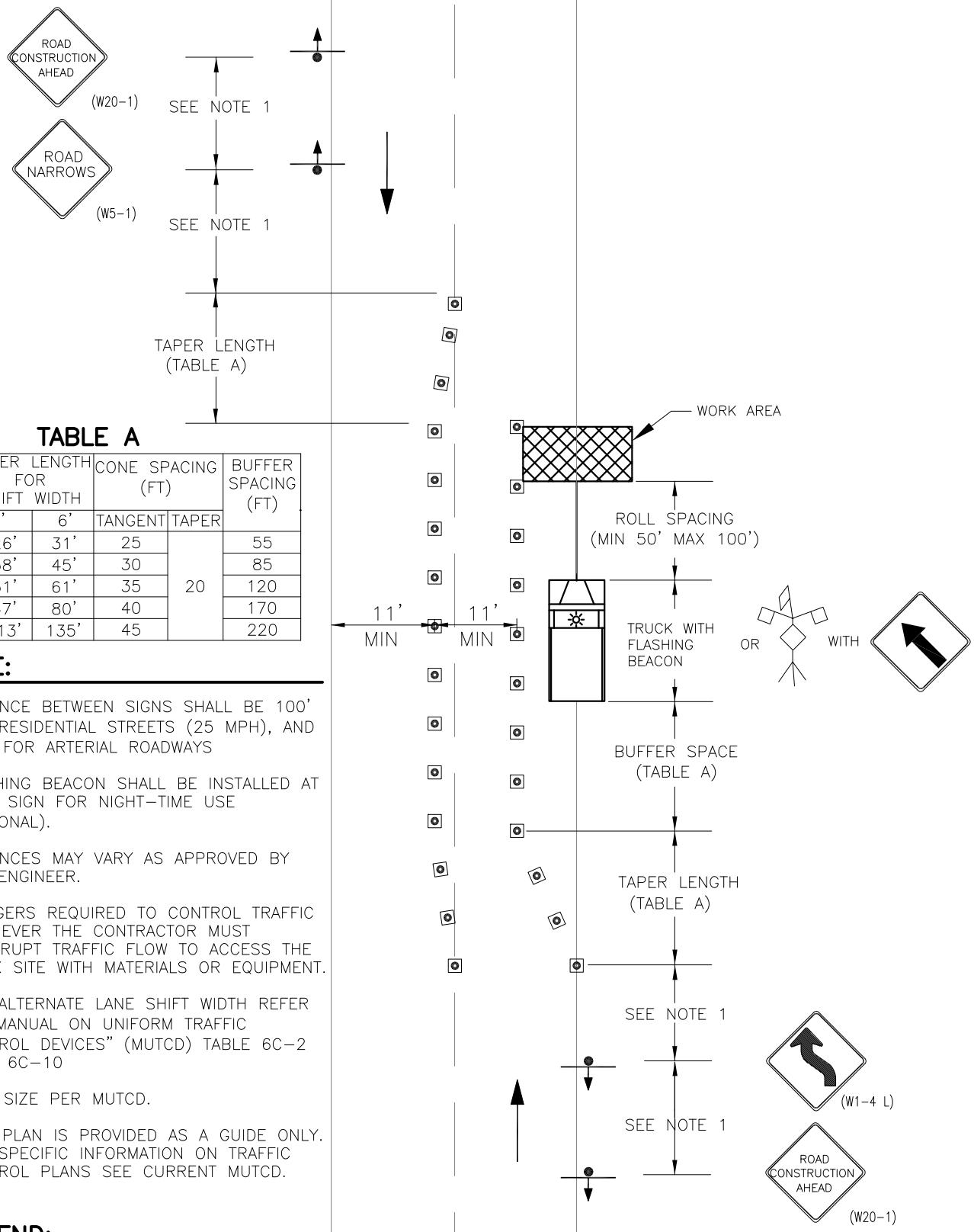

TABLE A

SPEED (MPH)	TAPER LENGTH FOR SHIFT WIDTH		CONE SPACING (FT)		BUFFER SPACING (FT)
	5'	6'	TANGENT	TAPER	
25	26'	31'	25	20	55
30	38'	45'	30		85
35	51'	61'	35		120
40	67'	80'	40		170
45	113'	135'	45		220

NOTE:

1. DISTANCE BETWEEN SIGNS SHALL BE 100' FOR RESIDENTIAL STREETS (25 MPH), AND 350' FOR ARTERIAL ROADWAYS
2. FLASHING BEACON SHALL BE INSTALLED AT EACH SIGN FOR NIGHT-TIME USE (OPTIONAL).
3. DISTANCES MAY VARY AS APPROVED BY THE ENGINEER.
4. FLAGGERS REQUIRED TO CONTROL TRAFFIC WHENEVER THE CONTRACTOR MUST INTERRUPT TRAFFIC FLOW TO ACCESS THE WORK SITE WITH MATERIALS OR EQUIPMENT.
5. FOR ALTERNATE LANE SHIFT WIDTH REFER TO "MANUAL ON UNIFORM TRAFFIC CONTROL DEVICES" (MUTCD) TABLE 6C-2 PAGE 6C-10
6. SIGN SIZE PER MUTCD.
7. THIS PLAN IS PROVIDED AS A GUIDE ONLY. FOR SPECIFIC INFORMATION ON TRAFFIC CONTROL PLANS SEE CURRENT MUTCD.

LEGEND:

⊡ CONE OR CHANNELIZING DEVICE (SEE STD 702)

CITY OF EVERETT
PUBLIC WORKS DEPARTMENT

Traffic Control Plan
2 Lane Roadway Partial Lane Closure

12-24-2003
Date:

701B
COE Std Dwg:

T:\ACad\eps-coe design & constr specs for development\CURRENT\std detail dwgs\Dwg Files\STD701B.dwg, 2/21/2014 3:36:43 PM

NOTE:

1. DISTANCE BETWEEN SIGNS SHALL BE 100' FOR RESIDENTIAL STREETS (25 MPH), AND 350' FOR ARTERIAL ROADWAYS
2. FLASHING BEACON SHALL BE INSTALLED AT EACH SIGN FOR NIGHT–TIME USE (OPTIONAL).
3. DISTANCES MAY VARY AS APPROVED BY THE ENGINEER.
4. FLAGGERS REQUIRED TO CONTROL TRAFFIC WHENEVER THE CONTRACTOR MUST INTERRUPT TRAFFIC FLOW TO ACCESS THE WORK SITE WITH MATERIALS OR EQUIPMENT.
5. SIGN SIZE PER MUTCD.
6. THIS PLAN IS PROVIDED AS A GUIDE ONLY. FOR SPECIFIC INFORMATION ON TRAFFIC CONTROL PLANS SEE CURRENT MUTCD.

TABLE A

SPEED (MPH)	CONE SPACING (FT)		BUFFER SPACING (FT)
	TANGENT	TAPER	
25	25	20	55
30	30		85
35	35		120
40	40		170
45	45		220

LEGEND:

CONE OR CHANNELIZING DEVICE (SEE STD 702)

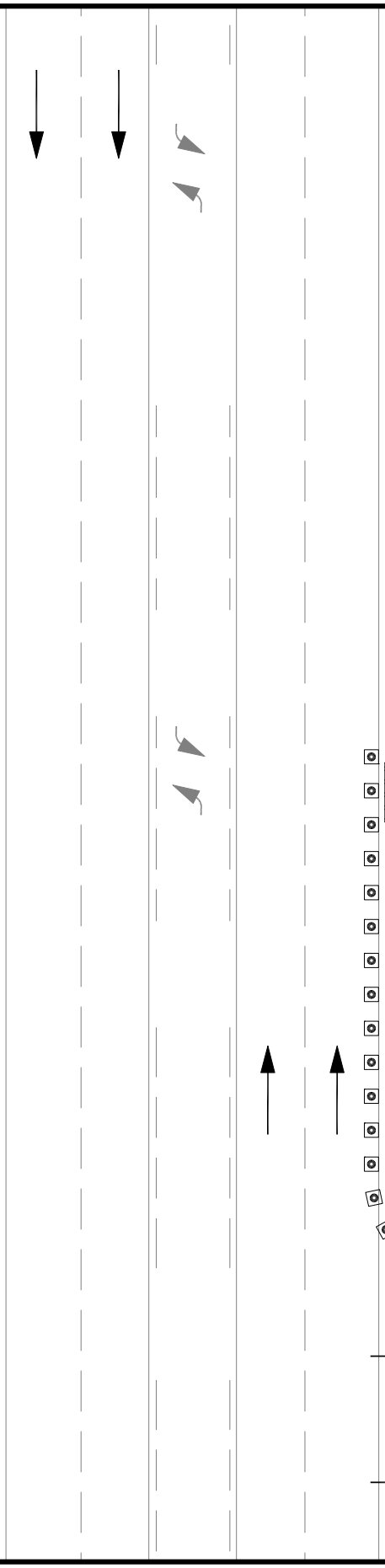

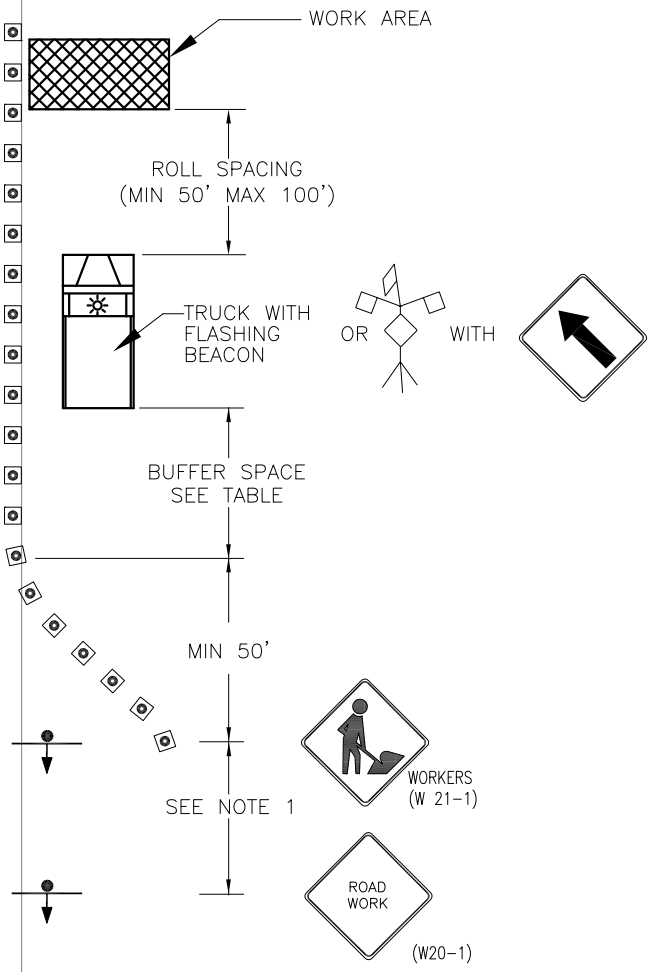

CITY OF EVERETT
PUBLIC WORKS DEPARTMENT

Traffic Control Plan
Shoulder Work

12-24-2003
Date:

701C
COE Std Dwg:

T:\ACad\eps-coe design & constr specs for development\CURRENT\std detail dwgs\Dwg Files\STD701C.dwg, 2/21/2014 3:37:27 PM

NOTE:

1. DISTANCE BETWEEN SIGNS SHALL BE 100' FOR RESIDENTIAL STREETS (25 MPH), AND 350' FOR ARTERIAL ROADWAYS
2. FLASHING BEACON SHALL BE INSTALLED AT EACH SIGN FOR NIGHT–TIME USE (OPTIONAL).
3. DISTANCES MAY VARY AS APPROVED BY THE ENGINEER.
4. FLAGGERS REQUIRED TO CONTROL TRAFFIC WHENEVER THE CONTRACTOR MUST INTERRUPT TRAFFIC FLOW TO ACCESS THE WORK SITE WITH MATERIALS OR EQUIPMENT.
5. SIGN SIZE PER MUTCD.
6. THIS PLAN IS PROVIDED AS A GUIDE ONLY. FOR SPECIFIC INFORMATION ON TRAFFIC CONTROL PLANS SEE CURRENT MUTCD.

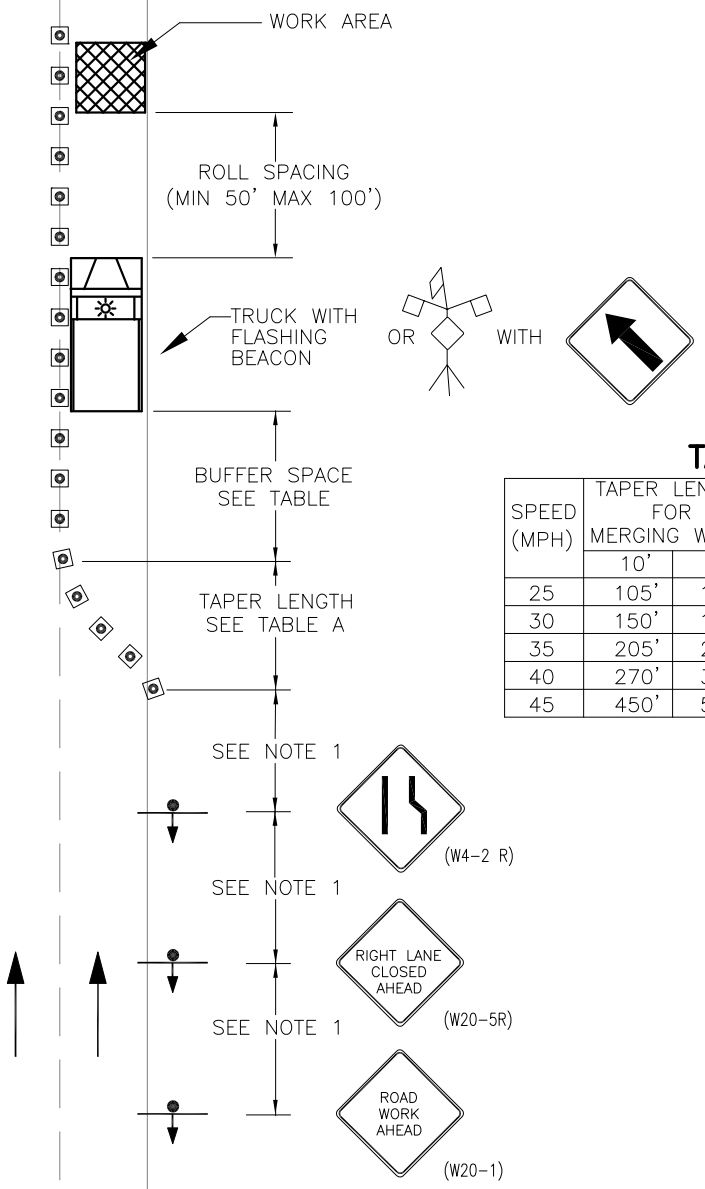

TABLE A

SPEED (MPH)	TAPER LENGTH FOR MERGING WIDTH		CONE SPACING (FT)		BUFFER SPACING (FT)
	10'	12'	TANGENT	TAPER	
25	105'	125'	25	20	55
30	150'	180'	30		85
35	205'	245'	35		120
40	270'	320'	40		170
45	450'	540'	45		220

LEGEND:

CONE OR CHANNELIZING DEVICE (SEE STD 702)

CITY OF EVERETT
PUBLIC WORKS DEPARTMENT

Traffic Control Plan
5 LANE ROADWAY WITH RIGHT LANE CLOSED

12-24-2003
Date:

701D
COE Std Dwg:

T:\ACad\eps-coe design & constr specs for development\CURRENT\std detail dwgs\Dwg Files\STD701D.dwg, 2/21/2014 3:38:02 PM

NOTE:

1. DISTANCE BETWEEN SIGNS SHALL BE 100' FOR RESIDENTIAL STREETS (25 MPH), AND 350' FOR ARTERIAL ROADWAYS
2. FLASHING BEACON SHALL BE INSTALLED AT EACH SIGN FOR NIGHT–TIME USE (OPTIONAL).
3. DISTANCES MAY VARY AS APPROVED BY THE ENGINEER.
4. FLAGGERS REQUIRED TO CONTROL TRAFFIC WHENEVER THE CONTRACTOR MUST INTERRUPT TRAFFIC FLOW TO ACCESS THE WORK SITE WITH MATERIALS OR EQUIPMENT.
5. SIGN SIZE PER MUTCD.
6. THIS PLAN IS PROVIDED AS A GUIDE ONLY. FOR SPECIFIC INFORMATION ON TRAFFIC CONTROL PLANS SEE CURRENT MUTCD.

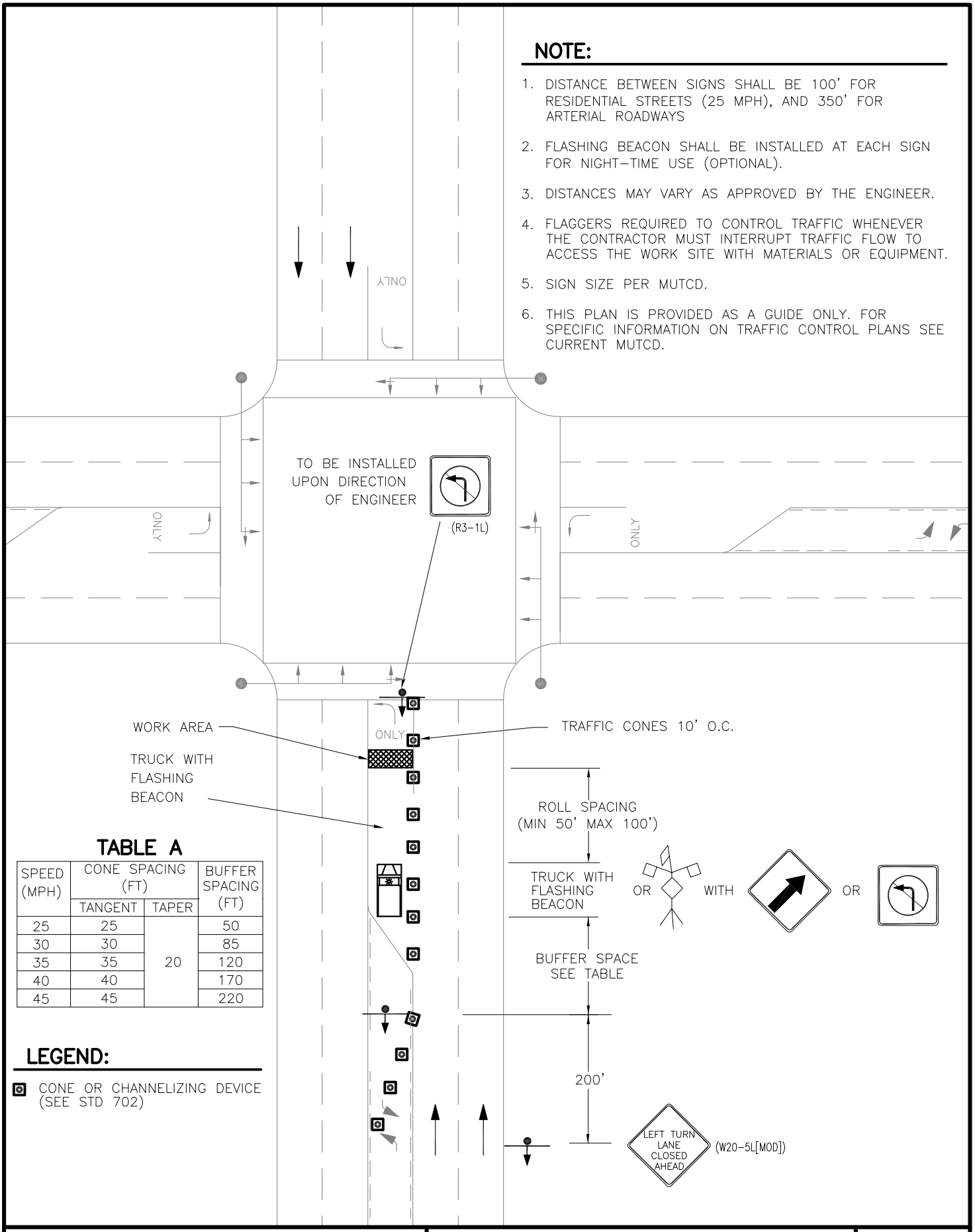

TABLE A

SPEED (MPH)	CONE SPACING (FT)		BUFFER SPACING (FT)
	TANGENT	TAPER	
25	25	20	50
30	30		85
35	35		120
40	40		170
45	45		220

LEGEND:

CONE OR CHANNELIZING DEVICE (SEE STD 702)

CITY OF EVERETT
PUBLIC WORKS DEPARTMENT

TRAFFIC CONTROL PLAN
5 LANE ROADWAY WITH LEFT TURN CLOSED

11-1-2007
Date:

701E
COE Std Dwg:

T:\ACad\eps-coe design & constr specs for development\CURRENT\std detail dwgs\Dwg Files\STD701E.dwg, 2/21/2014 3:38:45 PM

TABLE A

SPEED (MPH)	TAPER LENGTH (FT) OFFSET WIDTH 10'	TAPER LENGTH (FT) OFFSET WIDTH 12'	CONE SPACING ALONG TAPER (FT)
25	105	125	25
30	150	180	30
35	205	245	35
40	270	320	40
45	450	540	45

LEGEND:

CONE OR CHANNELIZING DEVICE (SEE STD 702)

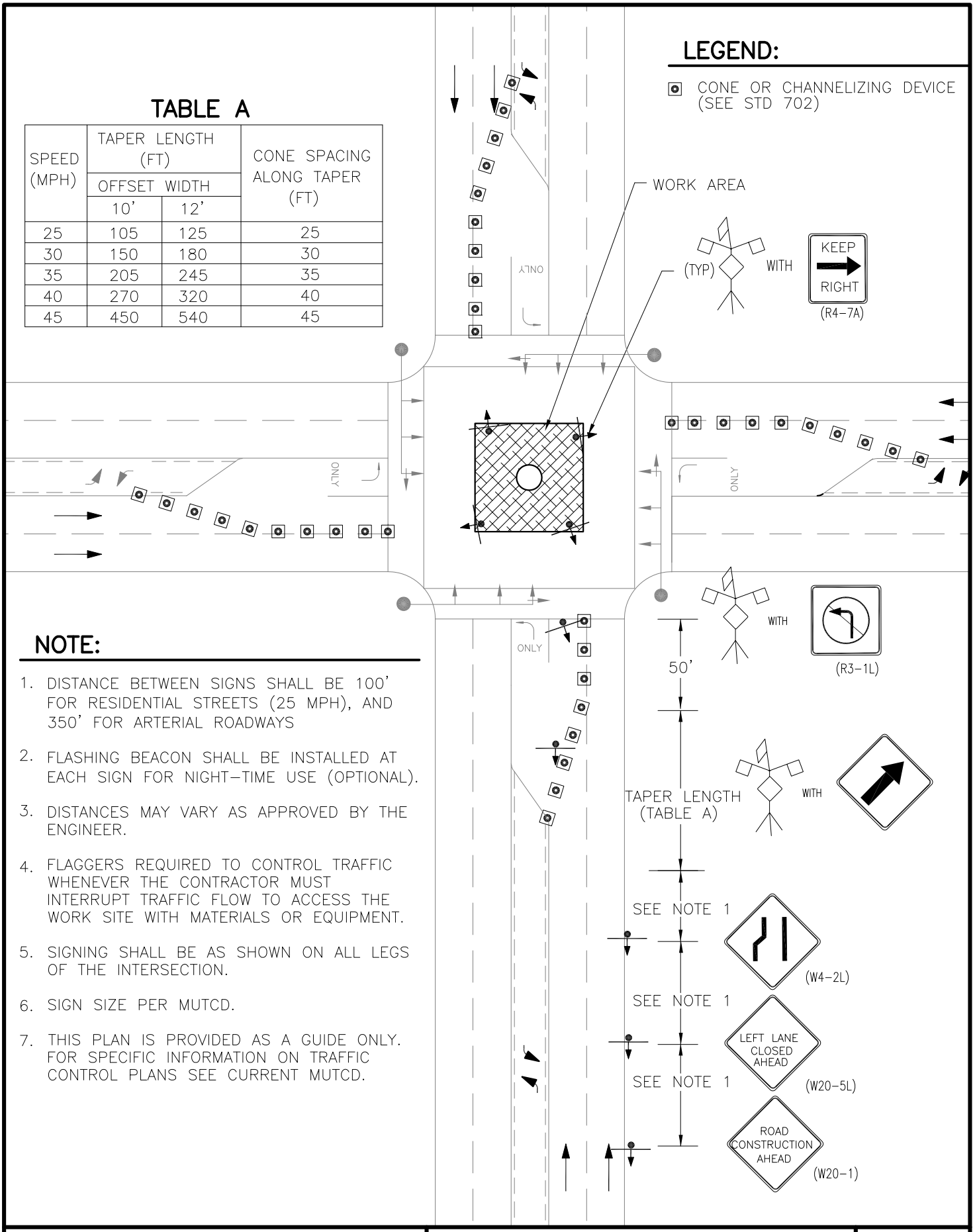

NOTE:

1. DISTANCE BETWEEN SIGNS SHALL BE 100' FOR RESIDENTIAL STREETS (25 MPH), AND 350' FOR ARTERIAL ROADWAYS
2. FLASHING BEACON SHALL BE INSTALLED AT EACH SIGN FOR NIGHT-TIME USE (OPTIONAL).
3. DISTANCES MAY VARY AS APPROVED BY THE ENGINEER.
4. FLAGGERS REQUIRED TO CONTROL TRAFFIC WHENEVER THE CONTRACTOR MUST INTERRUPT TRAFFIC FLOW TO ACCESS THE WORK SITE WITH MATERIALS OR EQUIPMENT.
5. SIGNING SHALL BE AS SHOWN ON ALL LEGS OF THE INTERSECTION.
6. SIGN SIZE PER MUTCD.
7. THIS PLAN IS PROVIDED AS A GUIDE ONLY. FOR SPECIFIC INFORMATION ON TRAFFIC CONTROL PLANS SEE CURRENT MUTCD.

CITY OF EVERETT
PUBLIC WORKS DEPARTMENT

TRAFFIC CONTROL PLAN
CENTER OF INTERSECTION WORK

12-24-2003
Date:

701F
COE Std Dwg:

T:\ACad\eps-coe design & constr specs for development\CURRENT\std detail dwgs\Dwg Files\STD701F.dwg, 2/21/2014 3:39:35 PM

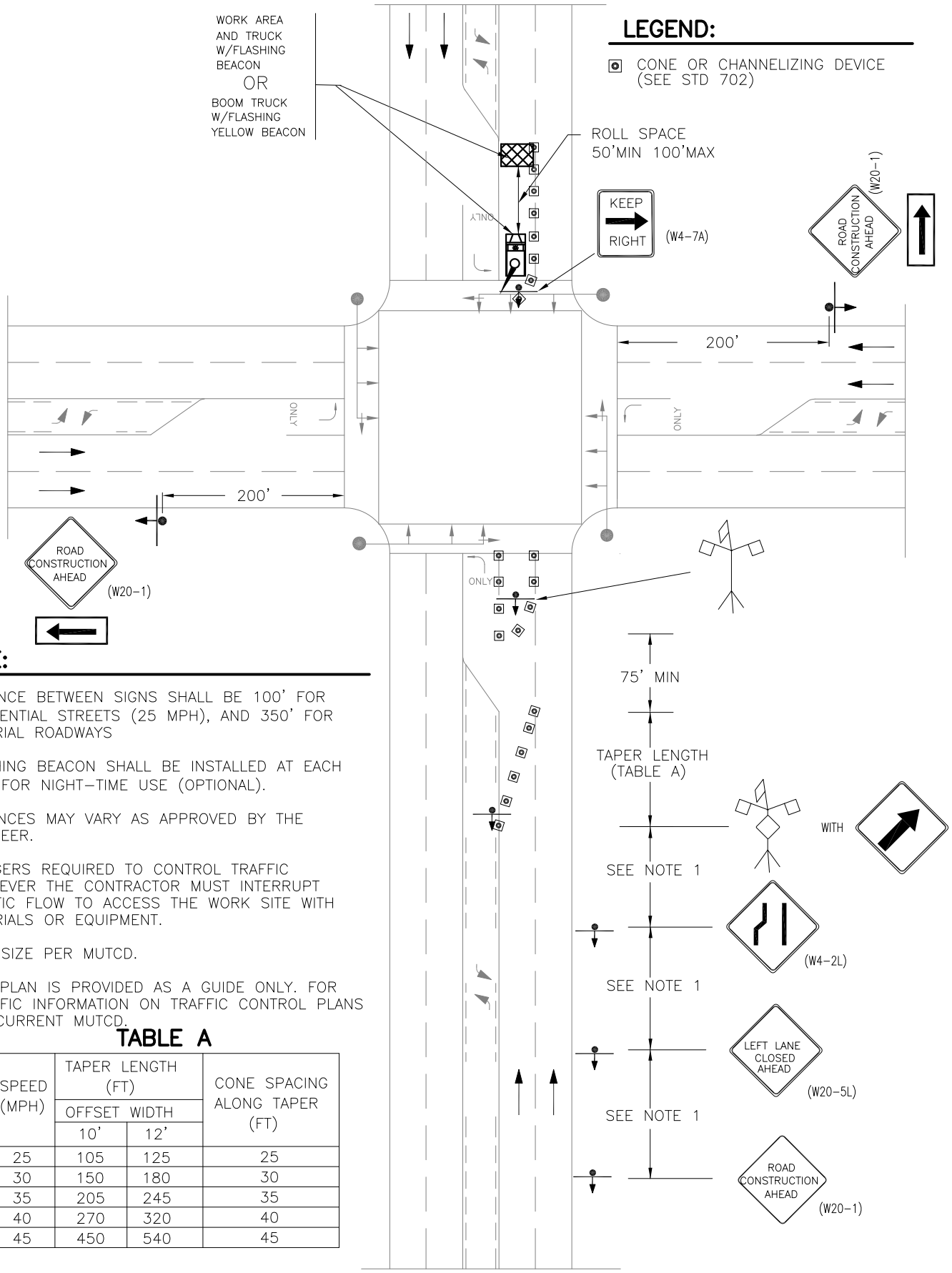

NOTE:

1. DISTANCE BETWEEN SIGNS SHALL BE 100' FOR RESIDENTIAL STREETS (25 MPH), AND 350' FOR ARTERIAL ROADWAYS
2. FLASHING BEACON SHALL BE INSTALLED AT EACH SIGN FOR NIGHT-TIME USE (OPTIONAL).
3. DISTANCES MAY VARY AS APPROVED BY THE ENGINEER.
4. FLAGGERS REQUIRED TO CONTROL TRAFFIC WHENEVER THE CONTRACTOR MUST INTERRUPT TRAFFIC FLOW TO ACCESS THE WORK SITE WITH MATERIALS OR EQUIPMENT.
5. SIGN SIZE PER MUTCD.
6. THIS PLAN IS PROVIDED AS A GUIDE ONLY. FOR SPECIFIC INFORMATION ON TRAFFIC CONTROL PLANS SEE CURRENT MUTCD.

TABLE A

SPEED (MPH)	TAPER LENGTH (FT) OFFSET WIDTH 10'	TAPER LENGTH (FT) OFFSET WIDTH 12'	CONE SPACING ALONG TAPER (FT)
25	105	125	25
30	150	180	30
35	205	245	35
40	270	320	40
45	450	540	45

CITY OF EVERETT
PUBLIC WORKS DEPARTMENT

TRAFFIC CONTROL PLAN
5 LANE ROADWAY WITH LEFT TURN CLOSURE FAR SIDE OF INTERSECTION

12-24-2003
Date:

701G
COE Std Dwg:

T:\ACad\eps-coe design & constr specs for development\CURRENT\std detail dwgs\Dwg Files\STD701G.dwg, 2/21/2014 3:43:01 PM

NOTE:

1. DISTANCE BETWEEN SIGNS SHALL BE 100' FOR RESIDENTIAL STREETS (25 MPH), AND 350' FOR ARTERIAL ROADWAYS
2. FLASHING BEACON SHALL BE INSTALLED AT EACH SIGN FOR NIGHT–TIME USE (OPTIONAL).
3. DISTANCES MAY VARY AS APPROVED BY THE ENGINEER.
4. FLAGGERS REQUIRED TO CONTROL TRAFFIC WHENEVER THE CONTRACTOR MUST INTERRUPT TRAFFIC FLOW TO ACCESS THE WORK SITE WITH MATERIALS OR EQUIPMENT.
5. SIGN SIZE PER MUTCD.
6. THIS PLAN IS PROVIDED AS A GUIDE ONLY. FOR SPECIFIC INFORMATION ON TRAFFIC CONTROL PLANS SEE CURRENT MUTCD.

LEGEND:

CONE OR CHANNELIZING DEVICE (SEE STD 702)

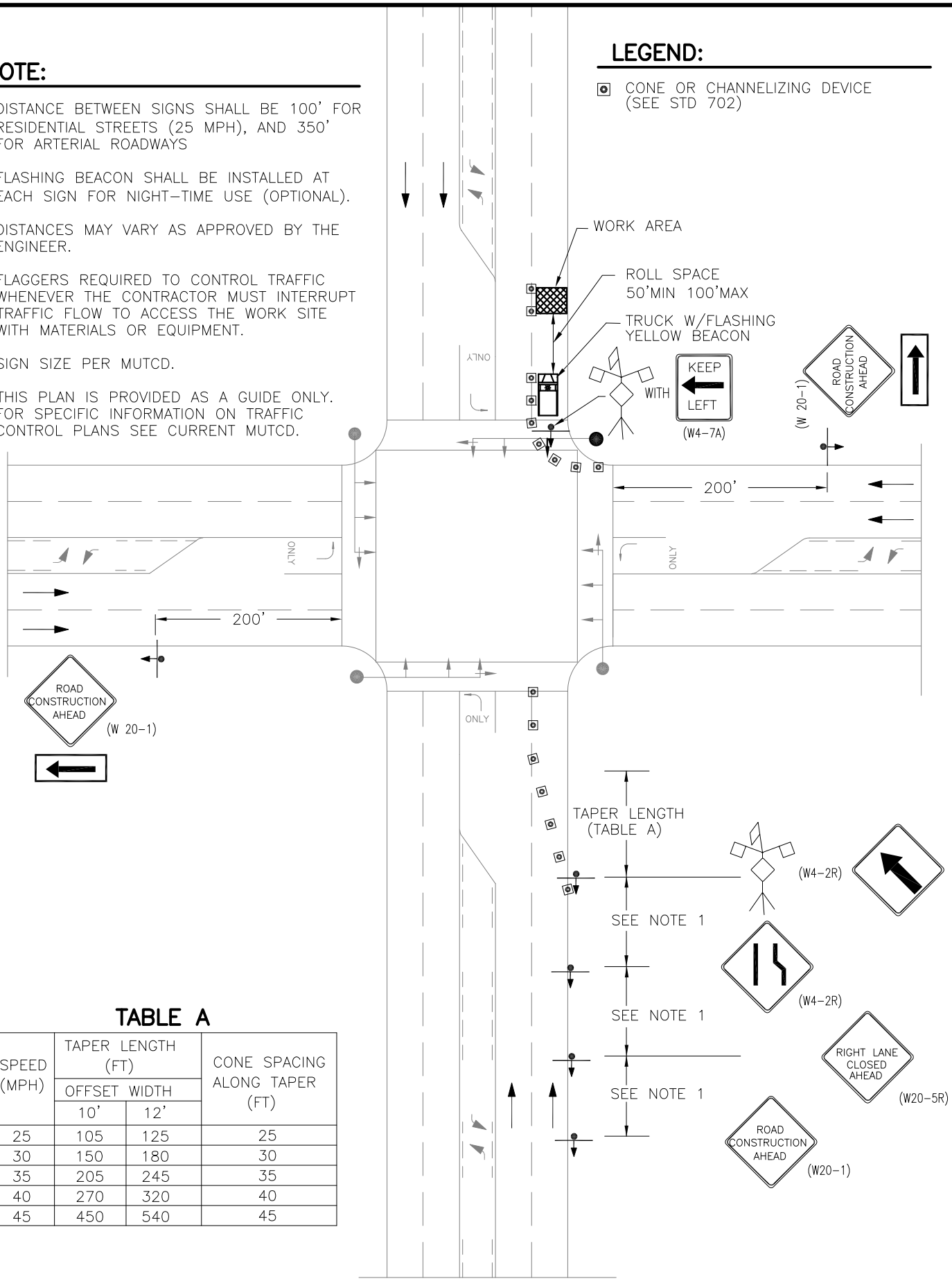

TABLE A

SPEED (MPH)	TAPER LENGTH (FT)		CONE SPACING ALONG TAPER (FT)
	OFFSET WIDTH		
	10'	12'	
25	105	125	25
30	150	180	30
35	205	245	35
40	270	320	40
45	450	540	45

CITY OF EVERETT
PUBLIC WORKS DEPARTMENT

TRAFFIC CONTROL PLAN
5 LANE ROADWAY WITH RIGHT LANE CLOSURE FAR SIDE OF INTERSECTION

12-24-2003
Date:

701H
COE Std Dwg:

T:\ACad\eps-coe design & constr specs for development\CURRENT\std detail dwgs\Dwg Files\STD701H.dwg, 2/21/2014 3:52:12 PM

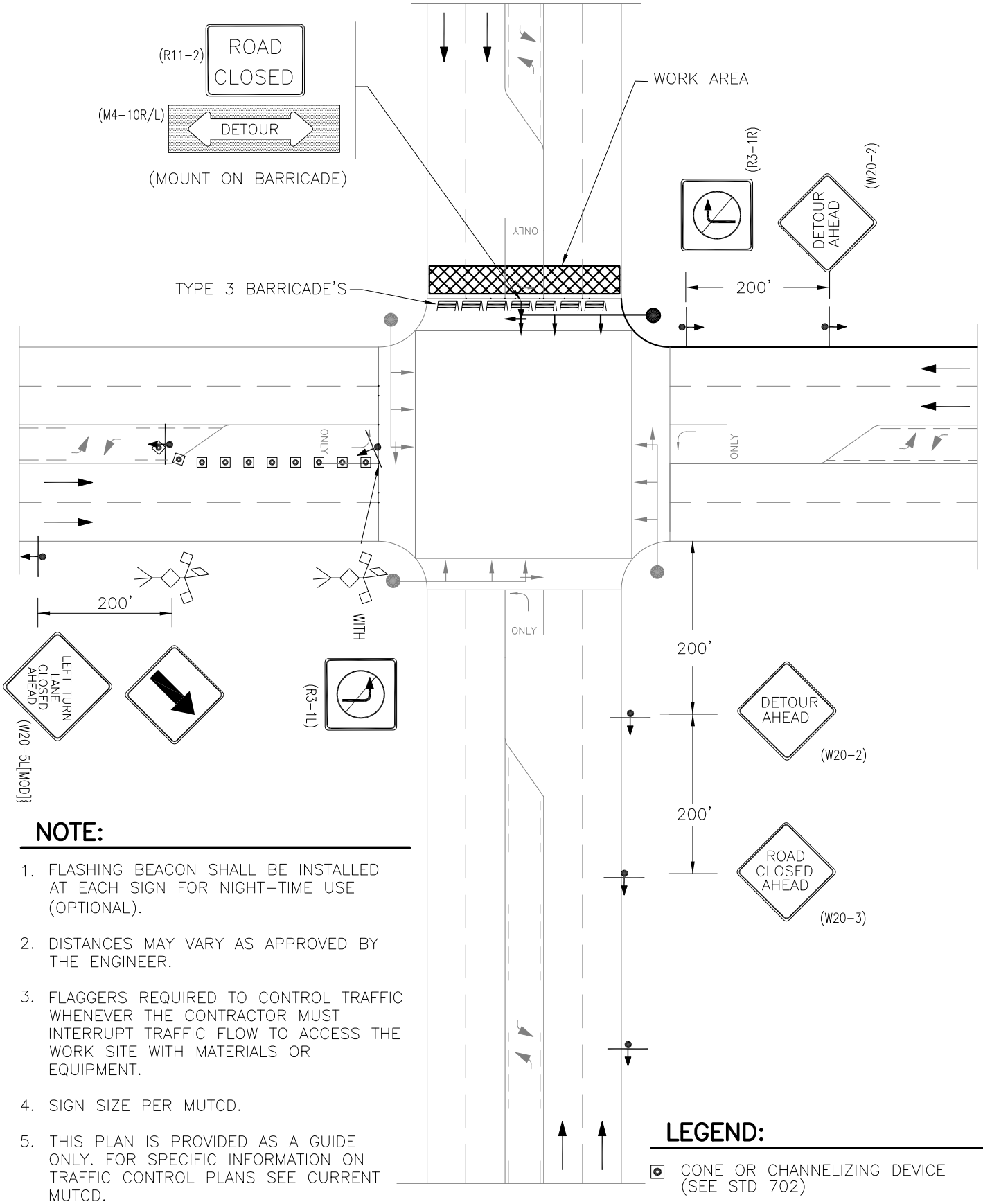

NOTE:

1. FLASHING BEACON SHALL BE INSTALLED AT EACH SIGN FOR NIGHT-TIME USE (OPTIONAL).
2. DISTANCES MAY VARY AS APPROVED BY THE ENGINEER.
3. FLAGGERS REQUIRED TO CONTROL TRAFFIC WHENEVER THE CONTRACTOR MUST INTERRUPT TRAFFIC FLOW TO ACCESS THE WORK SITE WITH MATERIALS OR EQUIPMENT.
4. SIGN SIZE PER MUTCD.
5. THIS PLAN IS PROVIDED AS A GUIDE ONLY. FOR SPECIFIC INFORMATION ON TRAFFIC CONTROL PLANS SEE CURRENT MUTCD.

LEGEND:

CONE OR CHANNELIZING DEVICE (SEE STD 702)

CITY OF EVERETT
PUBLIC WORKS DEPARTMENT

TRAFFIC CONTROL PLAN
FULL STREET CLOSURE

12-22-2003
Date:

7011
COE Std Dwg:

T:\ACad\eps-coe design & constr specs for development\CURRENT\std detail dwgs\Dwg Files\STD7011.dwg, 2/21/2014 3:53:39 PM

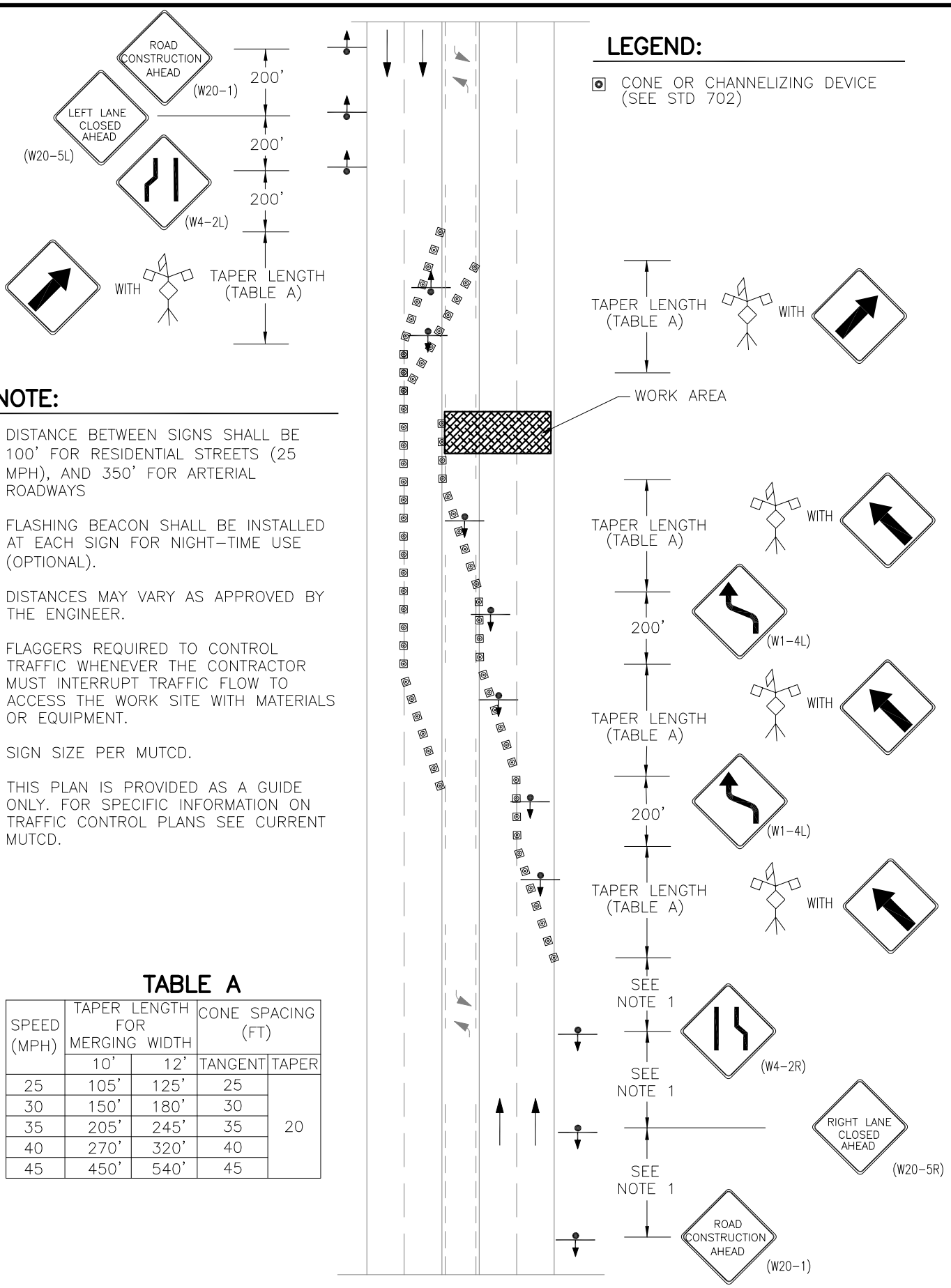

NOTE:

1. DISTANCE BETWEEN SIGNS SHALL BE 100' FOR RESIDENTIAL STREETS (25 MPH), AND 350' FOR ARTERIAL ROADWAYS
2. FLASHING BEACON SHALL BE INSTALLED AT EACH SIGN FOR NIGHT-TIME USE (OPTIONAL).
3. DISTANCES MAY VARY AS APPROVED BY THE ENGINEER.
4. FLAGGERS REQUIRED TO CONTROL TRAFFIC WHENEVER THE CONTRACTOR MUST INTERRUPT TRAFFIC FLOW TO ACCESS THE WORK SITE WITH MATERIALS OR EQUIPMENT.
5. SIGN SIZE PER MUTCD.
6. THIS PLAN IS PROVIDED AS A GUIDE ONLY. FOR SPECIFIC INFORMATION ON TRAFFIC CONTROL PLANS SEE CURRENT MUTCD.

TABLE A

SPEED (MPH)	TAPER LENGTH FOR MERGING WIDTH		CONE SPACING (FT)	
	10'	12'	TANGENT	TAPER
25	105'	125'	25	20
30	150'	180'	30	
35	205'	245'	35	
40	270'	320'	40	
45	450'	540'	45	

CITY OF EVERETT
PUBLIC WORKS DEPARTMENT

TRAFFIC CONTROL PLAN
5 LANE ROADWAY WITH MULTILANE CLOSURE

12-24-2003
Date:

701J
COE Std Dwg:

T:\ACad\eps-coe design & constr specs for development\CURRENT\std detail dwgs\Dwg Files\STD701J.dwg, 2/21/2014 3:55:47 PM

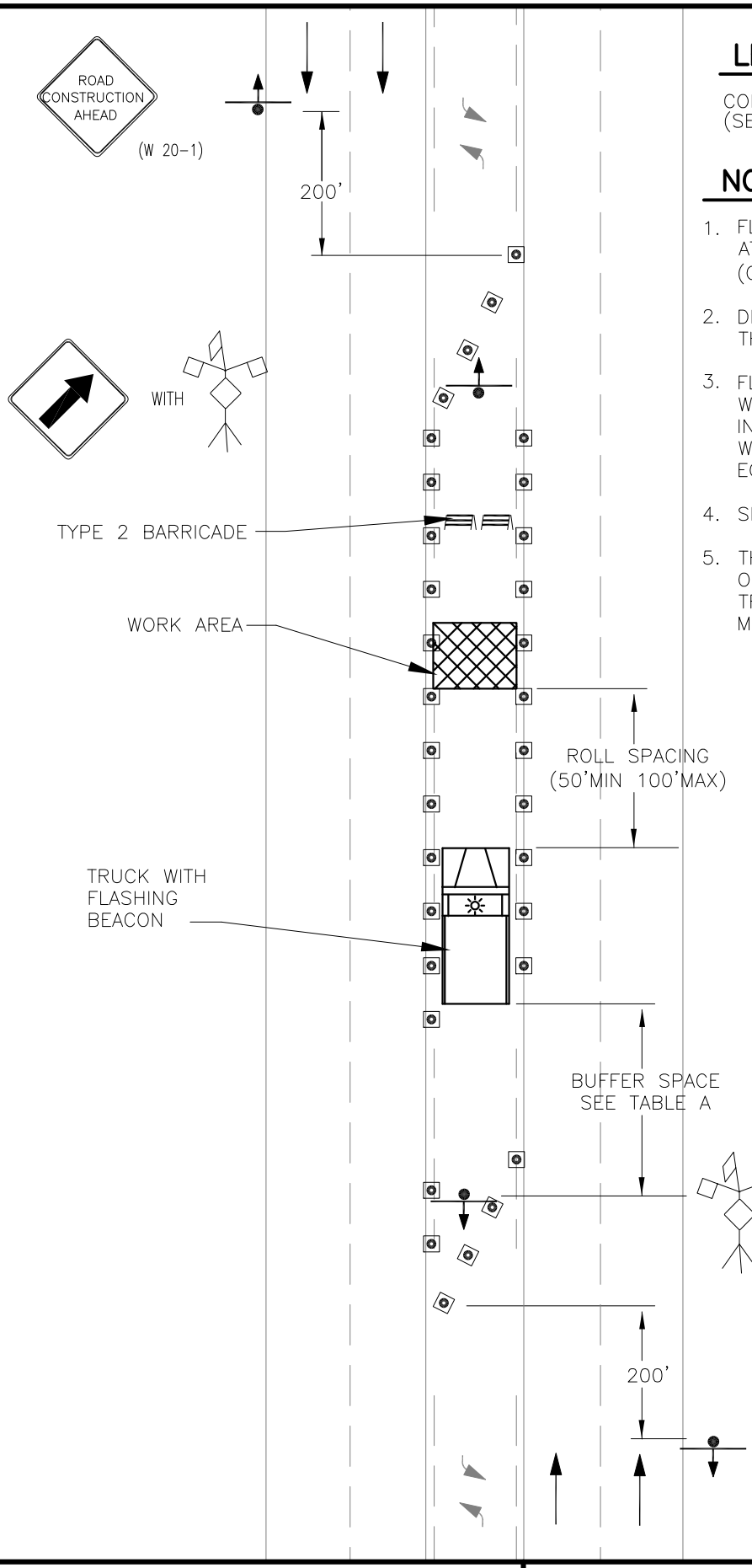

LEGEND:

CONE OR CHANNELIZING DEVICE
(SEE STD 702)

NOTE:

1. FLASHING BEACON SHALL BE INSTALLED AT EACH SIGN FOR NIGHT-TIME USE (OPTIONAL).
2. DISTANCES MAY VARY AS APPROVED BY THE ENGINEER.
3. FLAGGERS REQUIRED TO CONTROL TRAFFIC WHENEVER THE CONTRACTOR MUST INTERRUPT TRAFFIC FLOW TO ACCESS THE WORK SITE WITH MATERIALS OR EQUIPMENT.
4. SIGN SIZE PER MUTCD.
5. THIS PLAN IS PROVIDED AS A GUIDE ONLY. FOR SPECIFIC INFORMATION ON TRAFFIC CONTROL PLANS SEE CURRENT MUTCD.

TABLE A

SPEED (MPH)	CONE SPACING (FT)		BUFFER SPACING (FT)
	TANGENT	TAPER	
25	25	20	50
30	30		85
35	35		120
40	40		170
45	45		220

CITY OF EVERETT
PUBLIC WORKS DEPARTMENT

TRAFFIC CONTROL PLAN
TWO WAY LEFT TURN LAND CLOSURE

12-24-2003
Date:

701K
COE Std Dwg:

T:\ACad\eps-coe design & constr specs for development\CURRENT\std detail dwgs\Dwg Files\STD701K.dwg, 2/21/2014 3:57:40 PM

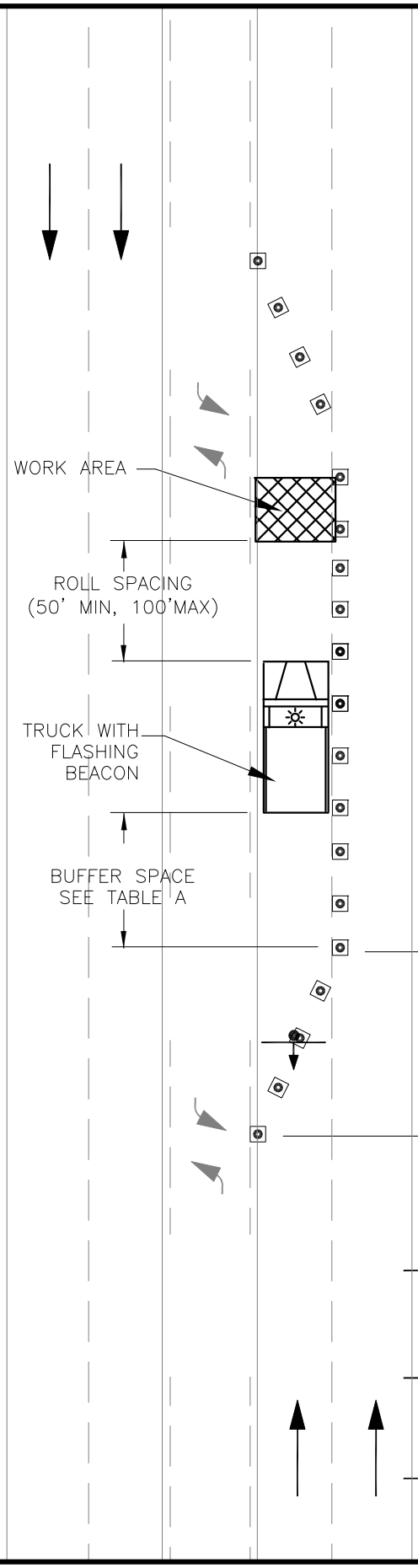

LEGEND:

CONE OR CHANNELIZING DEVICE (SEE STD 702)

NOTE:

1. DISTANCE BETWEEN SIGNS SHALL BE 100' FOR RESIDENTIAL STREETS (25 MPH), AND 350' FOR ARTERIAL ROADWAYS
2. FLASHING BEACON SHALL BE INSTALLED AT EACH SIGN FOR NIGHT–TIME USE (OPTIONAL).
3. DISTANCES MAY VARY AS APPROVED BY THE ENGINEER.
4. FLAGGERS REQUIRED TO CONTROL TRAFFIC WHENEVER THE CONTRACTOR MUST INTERRUPT TRAFFIC FLOW TO ACCESS THE WORK SITE WITH MATERIALS OR EQUIPMENT.
5. SIGN SIZE PER MUTCD.
6. THIS PLAN IS PROVIDED AS A GUIDE ONLY. FOR SPECIFIC INFORMATION ON TRAFFIC CONTROL PLANS SEE CURENT MUTCD.

TABLE A

SPEED (MPH)	TAPER LENGTH FOR MERGING WIDTH		CONE SPACING (FT)		BUFFER SPACING (FT)
	10'	12'	TANGENT	TAPER	
25	105'	125'	25	20	55
30	150'	180'	30		85
35	205'	245'	35		120
40	270'	320'	40		170
45	450'	540'	45		220

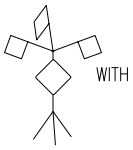

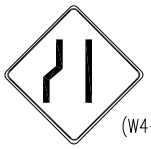

(W4-2 L)

(W 20-5L)

(W 20-1)

CITY OF EVERETT
PUBLIC WORKS DEPARTMENT

TRAFFIC CONTROL PLAN
5 LANE ROADWAY WITH LEFT LANE CLOSED

12-24-2003
Date:

701L
COE Std Dwg:

T:\ACad\eps-coe design & constr specs for development\CURRENT\std detail dwgs\Dwg Files\STD701L.dwg, 2/21/2014 3:58:27 PM

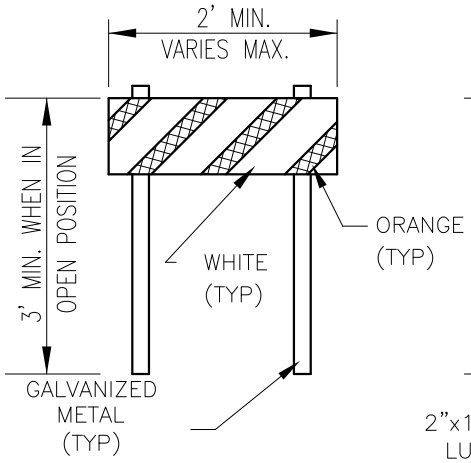

TYPE 1

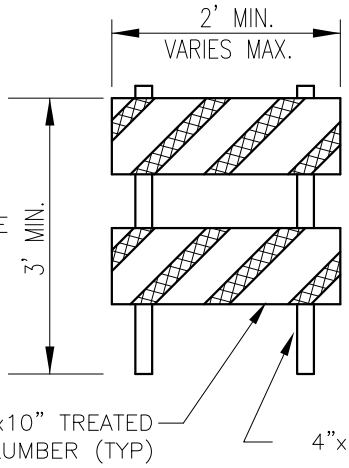

TYPE 2

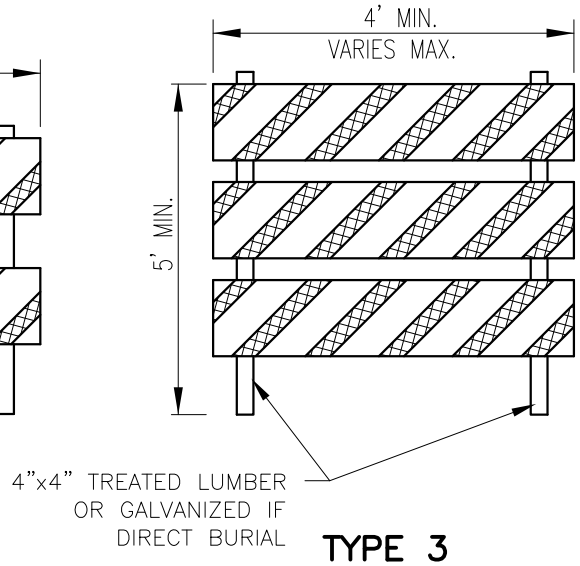

TYPE 3

BARRICADE

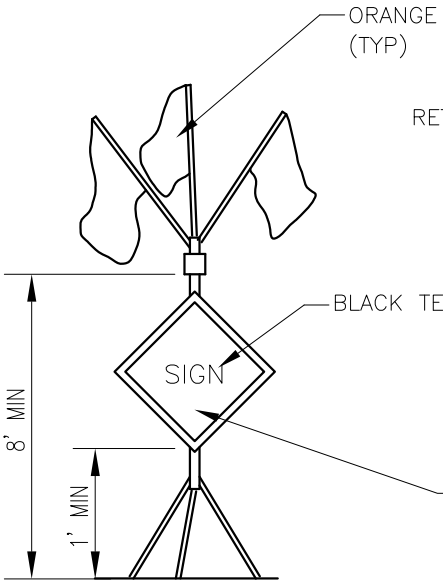

HIGH LEVEL WARNING DEVICE

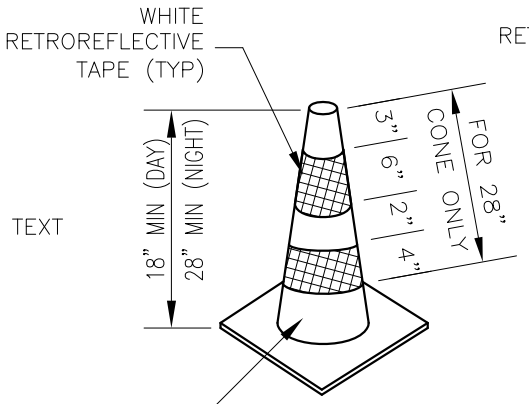

CONE

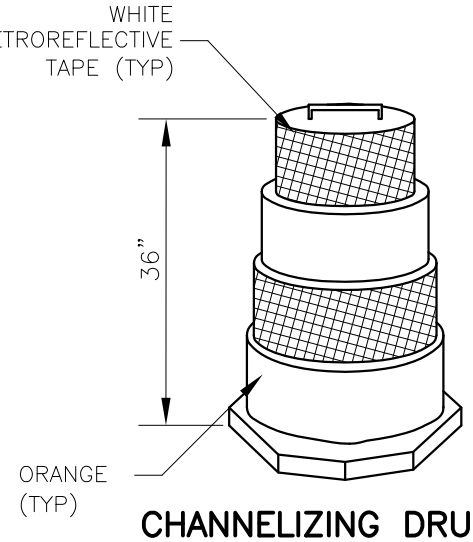

CHANNELIZING DRUM

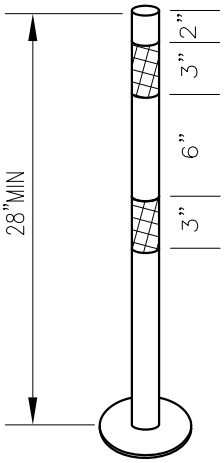

GUIDE POST

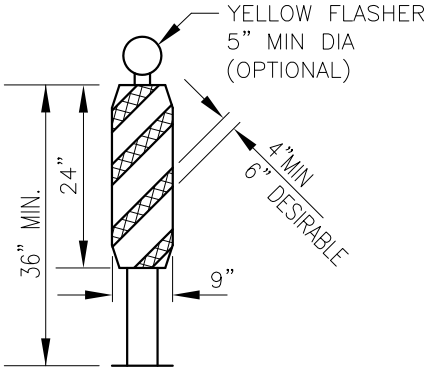

VERTICAL PANEL

NOTES:

1. THIS PLAN IS PROVIDED AS A GUIDE ONLY. FOR SPECIFIC INFORMATION ON TRAFFIC CONTROL PLANS SEE CURRENT MUTCD.
2. SEE FIGURE 6F-2 OF THE MUCD FOR OTHER METHODS OF MOUNTING SIGNS OTHER THAN ON POSTS
3. FOR ADDITIONAL INFORMATION REGARDING BARRICADES AND CHANNELIZING DEVICES SEE FIGURE 6F-4 IN MUTCD

CITY OF EVERETT PUBLIC WORKS DEPARTMENT	TRAFFIC CONTROL DEVICES	12-24-2003 Date:
		702 COE Std Dwg:

T:\ACad\eps-coe design & constr specs for development\CURRENT\std detail dwgs\Dwg Files\STD702.dwg, 2/21/2014 3:59:30 PM

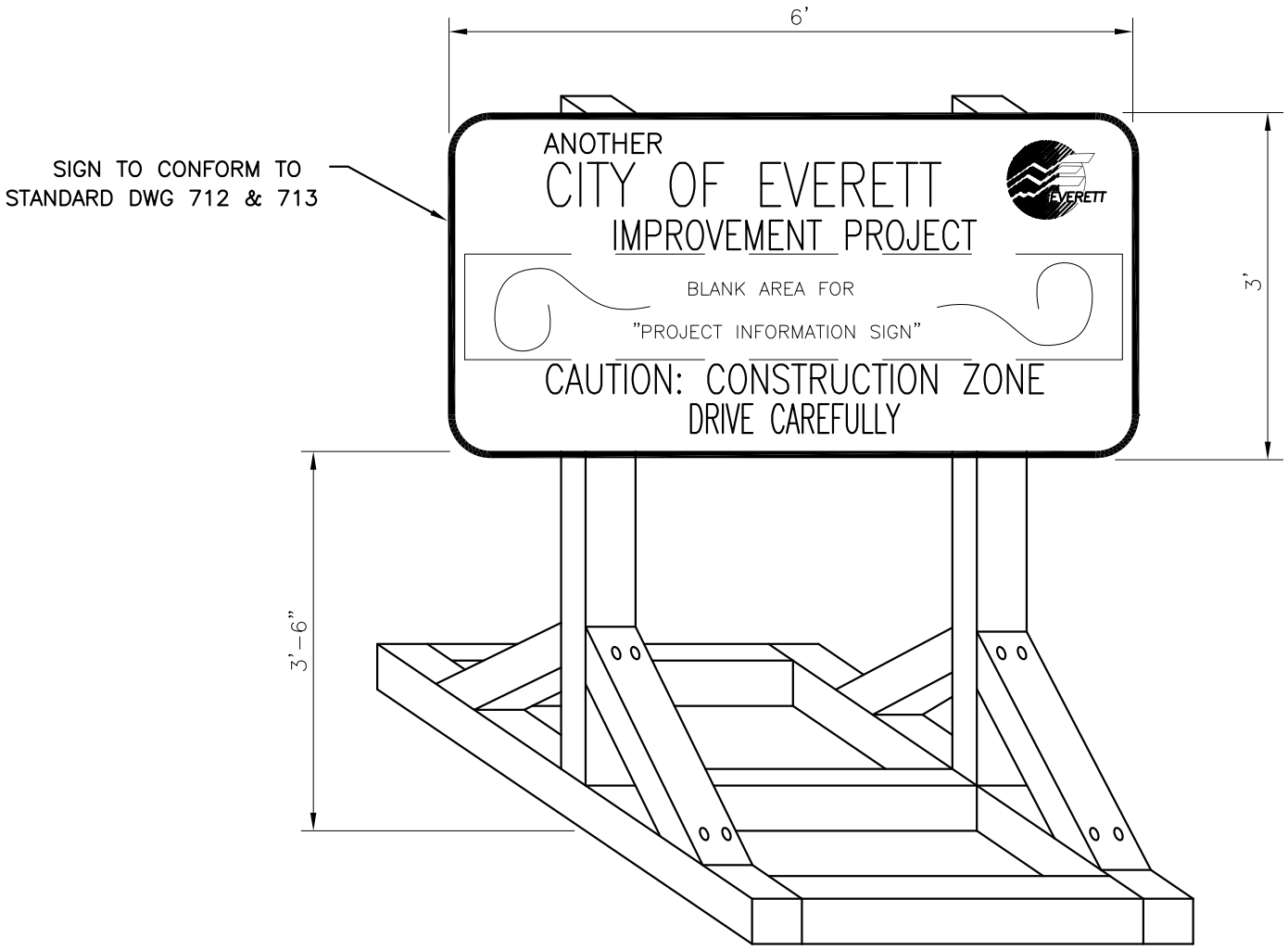

NOTES:

1. WOOD FRAME CONSTRUCTED WITH 4"x4" TREATED FIR LUMBER WITH GALVANIZED STEEL LAG BOLTS.
2. USE SANDBAGS ON BASE OF FRAME TO PREVENT OVERTURNING BY WIND GUSTS.
3. FINISHED FRAME TO BE PAINTED WITH WHITE EXTERIOR ENAMEL (2 COATS).

CITY OF EVERETT PUBLIC WORKS DEPARTMENT	CONSTRUCTION IDENTIFICATION SIGN STAND	9-21-1991 Date: 711 COE Std Dwg:

T:\ACad\eps-coe design & constr specs for development\CURRENT\std detail dwgs\Dwg Files\STD711.dwg, 2/21/2014 4:00:29 PM

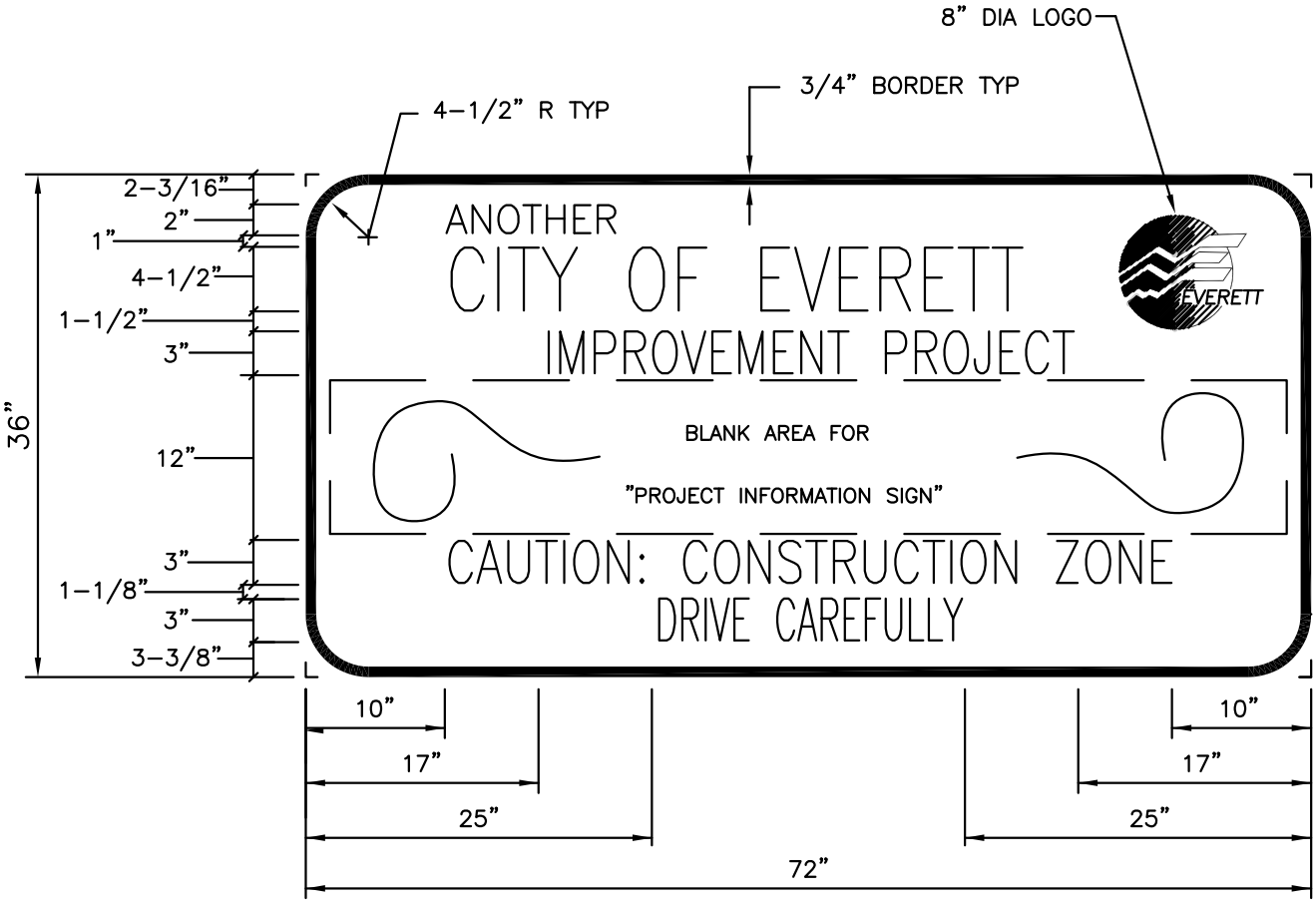

NOTES:

1. SIGN BOARD SHALL BE DURA-PLY, M.D.O. OR EQUAL, WITH 2 COATS OF EXTERIOR PRIMER-SEALER PLUS 2 COATS OF INDUSTRIAL GRADE ENAMEL, 1-SHOT, COLOR 101-L WHITE OR EQUAL. BORDER AND LETTERING SHALL BE 1-SHOT, COLOR 144-L MED. GREEN OR EQUAL FONT STYLE SHALL BE "ARIAL NARROW". LOGO TO BE SUPPLIED BY THE CITY OF EVERETT. SIGN AND COLORS TO BE APPROVED BY THE ENGINEER.

2. "PROJECT INFORMATION SIGN" TO CONFORM WITH STANDARD DWG NO. 713. INFORMATION TO BE PROVIDED BY THE ENGINEER.

EVERETT **CITY OF EVERETT** **PUBLIC WORKS DEPARTMENT**	CONSTRUCTION IDENTIFICATION SIGN	6-24-2011 Date: 712 COE Std Dwg:

T:\ACad\eps-coe design & constr specs for development\CURRENT\std detail dwgs\Dwg Files\STD712.dwg, 2/21/2014 4:01:31 PM

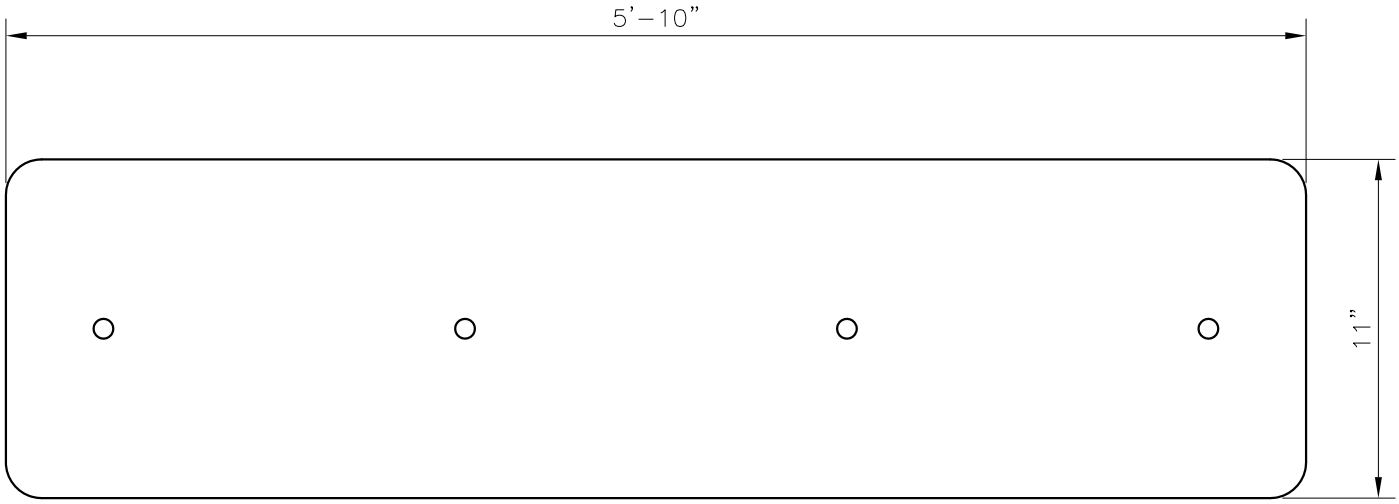

NOTES:

1. PROJECT INFORMATION SIGN SHALL BE A REMOVABLE METAL PLATE, SHEET ALUMINUM, 0.080 GAUGE, WITH 2 COATS OF INDUSTRIAL GRADE ENAMEL, 1-SHOT, COLOR 101-L WHITE OR EQUAL.

2. LETTERING SHALL BE 1 SHOT, COLOR 144-L MED. GREEN OR EQUAL. INFORMATION TO BE PROVIDED BY THE ENGINEER AND USED ON THE SIGN IN A STYLE AND MANNER CONSISTENT WITH LETTERING ON CONSTRUCTION IDENTIFICATION SIGN.

3. REMOVABLE PORTION OF SIGN SHALL BE ATTACHED TO WOODEN SIGN WITH FOUR(4) 1-1/2"x1/4" STAINLESS STEEL BOLTS WITH NUTS.

CITY OF EVERETT PUBLIC WORKS DEPARTMENT	PROJECT INFORMATION SIGN	9-21-1991 Date:
		713 COE Std Dwg:

T:\ACad\eps-coe design & constr specs for development\CURRENT\std detail dwgs\Dwg Files\STD713.dwg, 2/21/2014 4:02:14 PM

NOTE:

1. ALL NEW SIGN INSTALLATIONS SHALL USE 2" SQUARE TUBE POSTS. ROUND POSTS MAY BE USED AT EXISTING LOCATIONS ONLY.

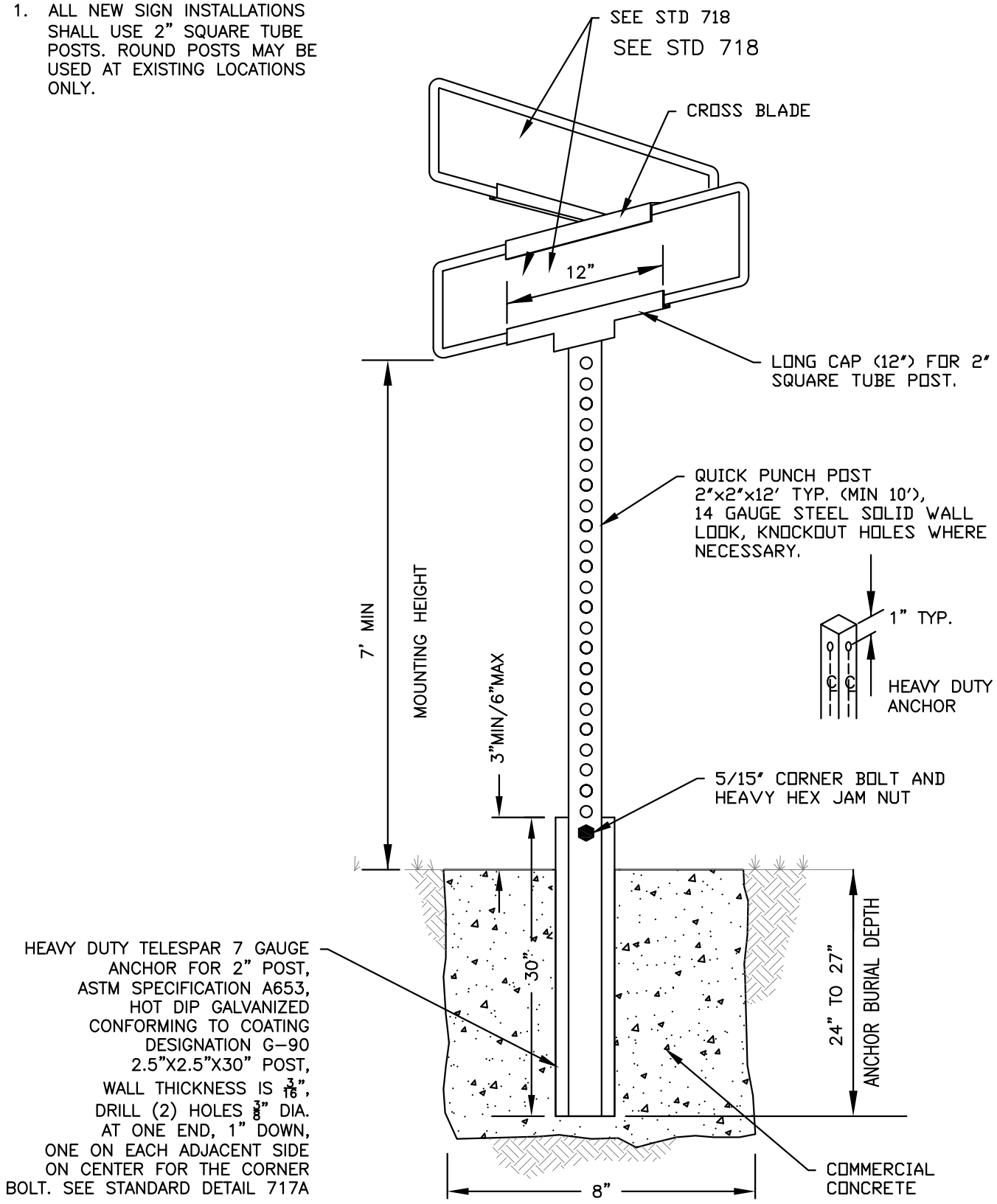

TYPICAL SECTION

CITY OF EVERETT PUBLIC WORKS DEPARTMENT	STREET NAME SIGN POST 2" SQ STEEL (SHEET 1 OF 3)	11-21-2013 Date: 715 COE Std Dwg:

T:\ACad\eps-coe design & constr specs for development\CURRENT\std detail dwgs\Dwg Files\STD715.dwg, 2/21/2014 4:02:58 PM

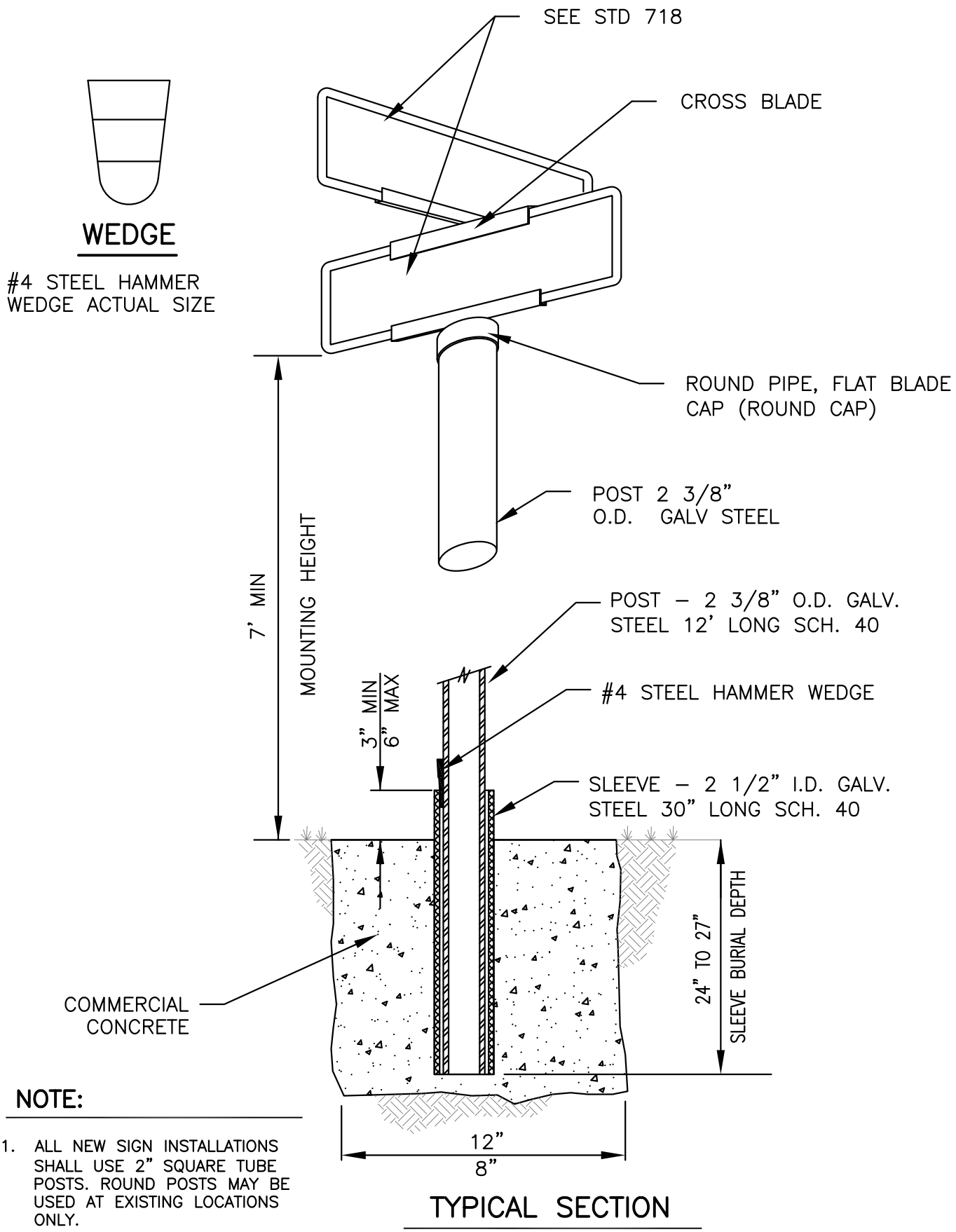

TYPICAL SECTION

NOTE:

1. ALL NEW SIGN INSTALLATIONS SHALL USE 2" SQUARE TUBE POSTS. ROUND POSTS MAY BE USED AT EXISTING LOCATIONS ONLY.

CITY OF EVERETT **PUBLIC WORKS DEPARTMENT**	STREET NAME SIGN POST 2" SQ STEEL (SHEET 2 OF 3)	11-21-2013 Date: 715 COE Std Dwg:

T:\ACad\eps-coe design & constr specs for development\CURRENT\std detail dwgs\Dwg Files\STD715.dwg, 2/21/2014 4:03:17 PM

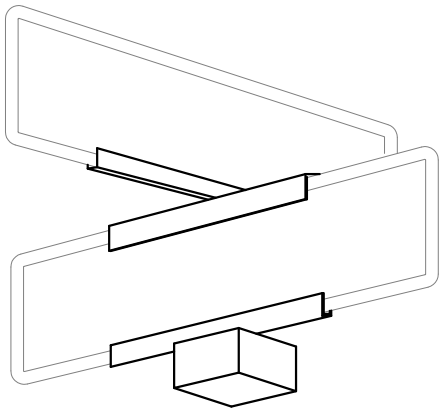

TYP ST NAME MOUNTING

SCALE: 1"= NTS

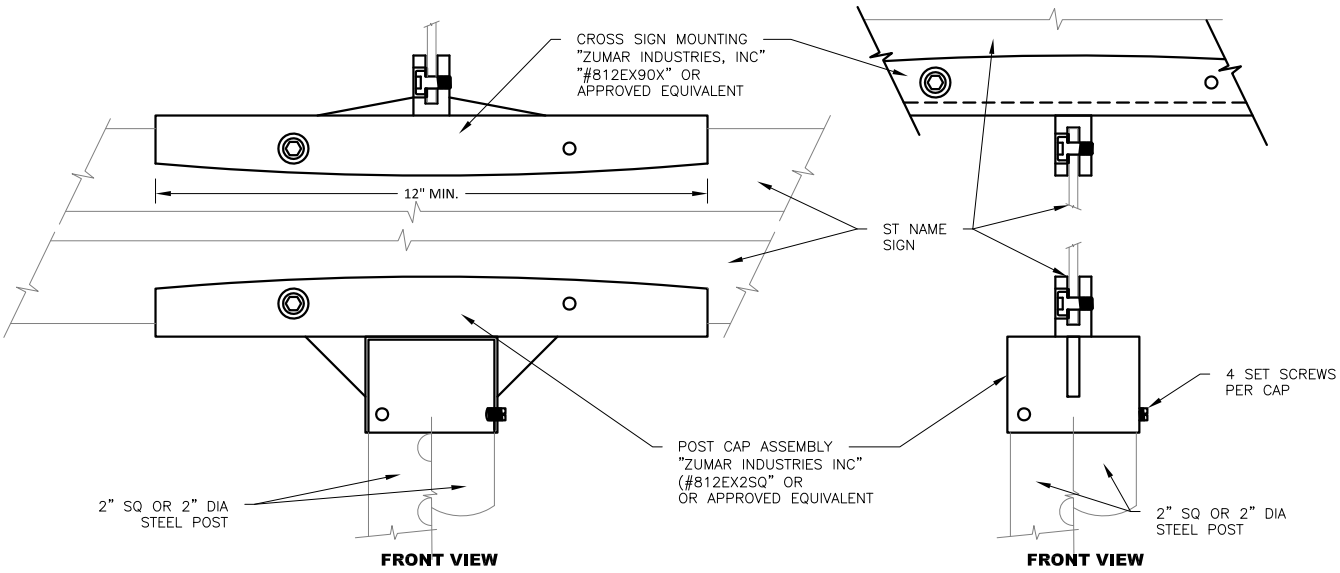

STREET NAME SIGN MOUNTING

SCALE: 1"= NTS

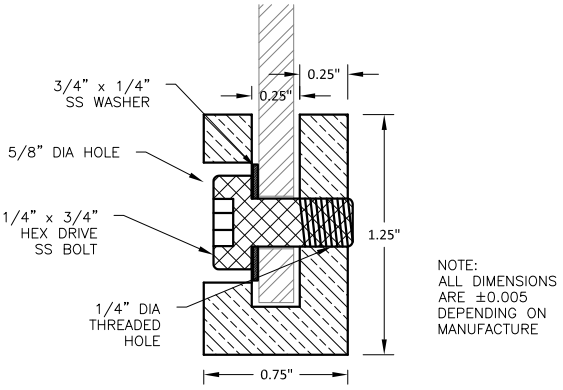

TYP ST NAME ARM SECTION

SCALE: 1"= NTS

CITY OF EVERETT
PUBLIC WORKS DEPARTMENT

STREET NAME SIGN POST MOUNTING HARDEWARE
(SHEET 3 OF 3)

11-21-2013
Date:

715
COE Std Dwg:

T:\ACad\eps-coe design & constr specs for development\CURRENT\std detail dwgs\Dwg Files\STD715.dwg, 2/21/2014 4:03:47 PM

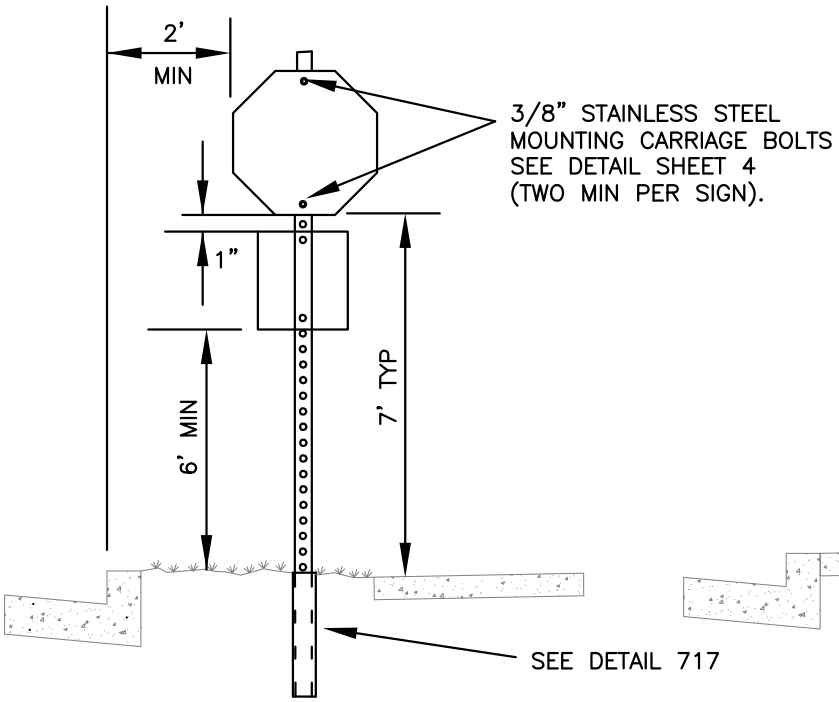

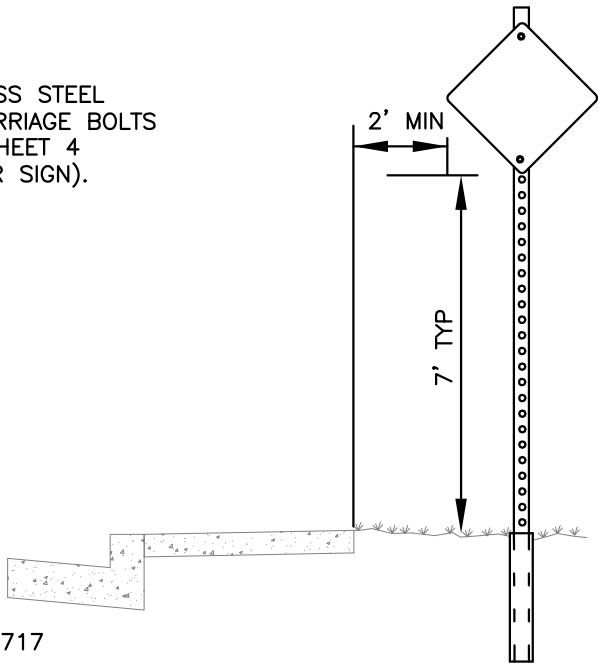

TYPICAL INSTALLATIONS

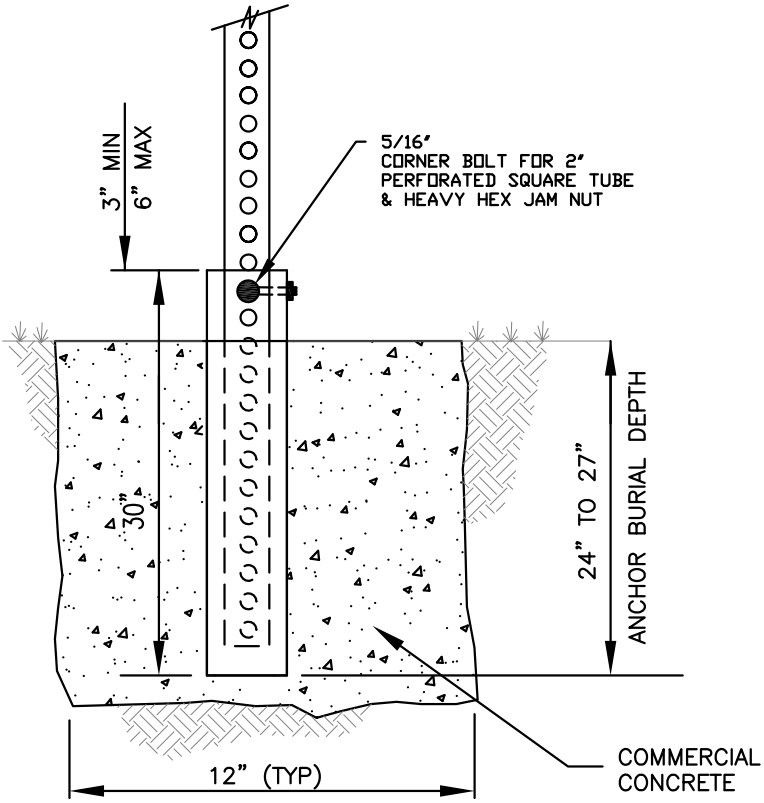

TYPICAL SECTION

NOTES:

1. STANDARD STOP SIGNS SHALL BE 30"x30" PER MUTCD #R1-1 UNLESS OTHERWISE APPROVED OR DIRECTED BY CITY OF EVERETT TRAFFIC ENGINEER.
2. STREET NAME SIGNS SHALL BE INSTALLED AT TOP OF POST. SEE STANDARD PLAN 715.
3. ALL NEW SIGN INSTALLATIONS SHALL USE 2" SQUARE TUBE POSTS. ROUND POSTS MAY BE USED AT EXISTING LOCATIONS ONLY.

CITY OF EVERETT PUBLIC WORKS DEPARTMENT	TRAFFIC SIGN INSTALLATION (SHEET 1 OF 4)	11-21-2013 Date: 716 COE Std Dwg:

T:\ACad\eps-coe design & constr specs for development\CURRENT\std detail dwgs\Dwg Files\STD716.dwg, 2/21/2014 4:04:42 PM

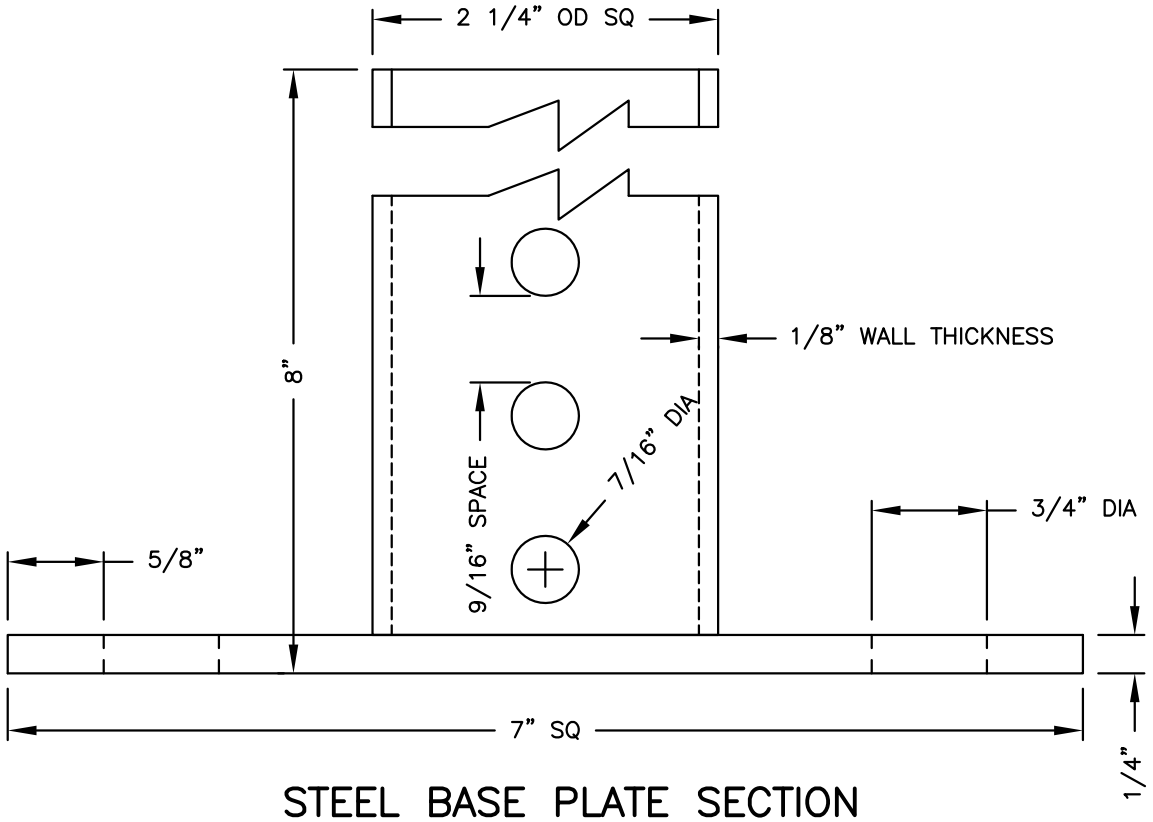

STEEL BASE PLATE SECTION

NOTES

1. ANCHOR MUST NOT PROTRUDE MORE THAN $\frac{1}{4}$" ABOVE THE NUT.
2. SHALL USE (4) 3/8" X 2 1/4"" (MIN) STAINLESS STEEL ANCHORS.
3. STEEL BASE PLATE MUST BE PRIMED WITH "RUSTOLEUM" OR APPROVED EQUIVALENT AND PAINTED WITH TWO COATS OF ALUMINUM HOT DIPPED GALVANIZED OR POWDER COATED TO PREVENT RUSTING, ALL SURFACES.
4. SEE WSDOT STANDARD PLAN # 621B FOR REFERENCE.
5. ALL NEW SIGN INSTALLATIONS SHALL USE 2" SQUARE TUBE POSTS. ROUND POSTS MAY BE USED AT EXISTING LOCATIONS ONLY.

CITY OF EVERETT PUBLIC WORKS DEPARTMENT	TRAFFIC SIGN INSTALLATION (SHEET 2 OF 4)	11-21-2013 Date: 716 COE Std Dwg:

T:\ACad\eps-coe design & constr specs for development\CURRENT\std detail dwgs\Dwg Files\STD716.dwg, 2/21/2014 4:05:07 PM

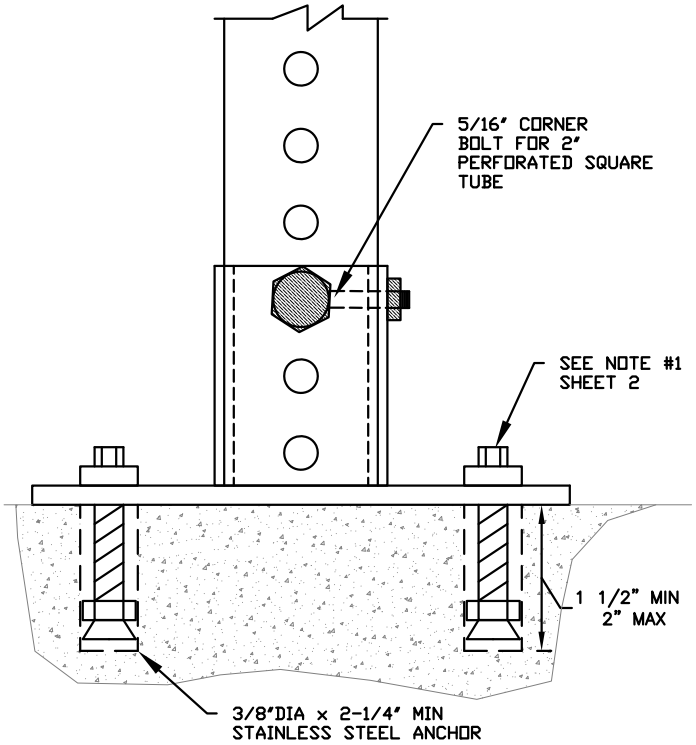

ANCHOR ASSEMBLY

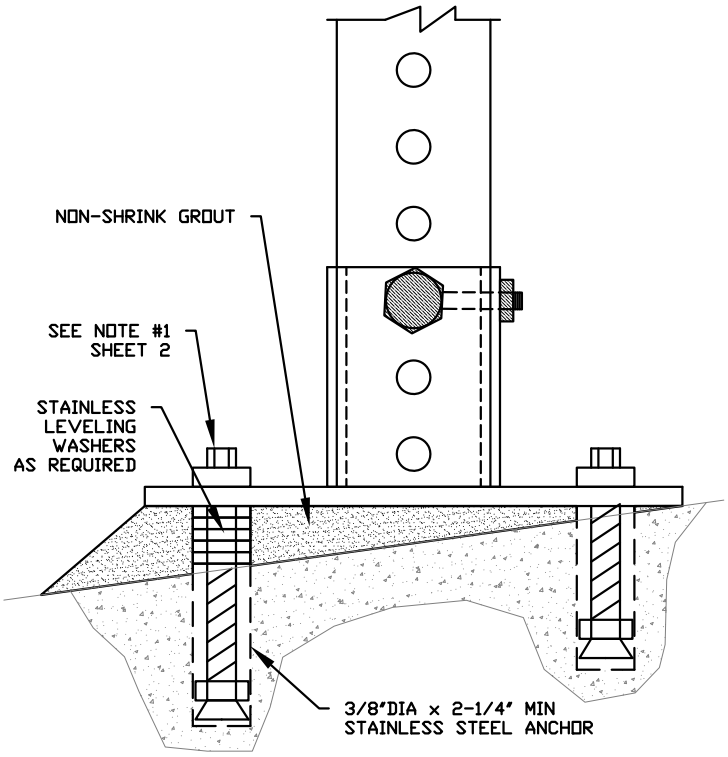

SLOPED SIDEWALK SURFACE

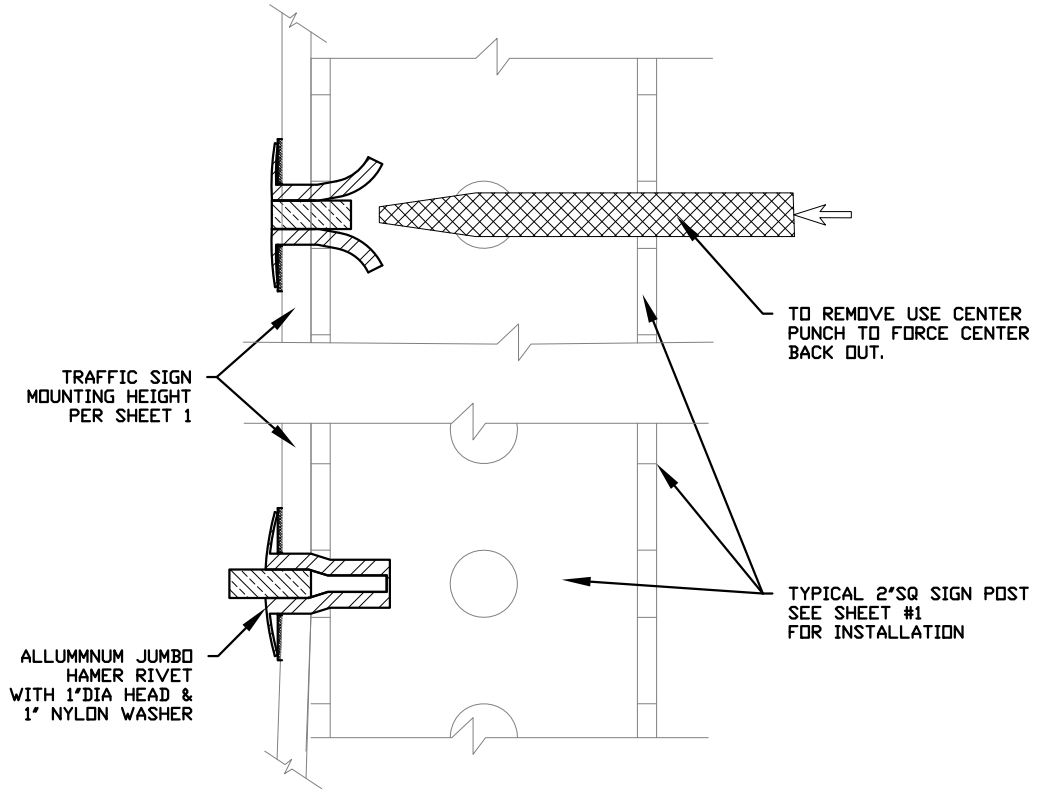

TYPE 1 SIGN MOUNTING

2 RIVETS PER SIGN MIN.

CITY OF EVERETT
PUBLIC WORKS DEPARTMENT

TRAFFIC SIGN INSTALLATION
(SHEET 3 OF 4)

11-21-2013
Date:

716
COE Std Dwg:

T:\ACad\eps-coe design & constr specs for development\CURRENT\std detail dwgs\Dwg Files\STD716.dwg, 2/21/2014 4:05:41 PM

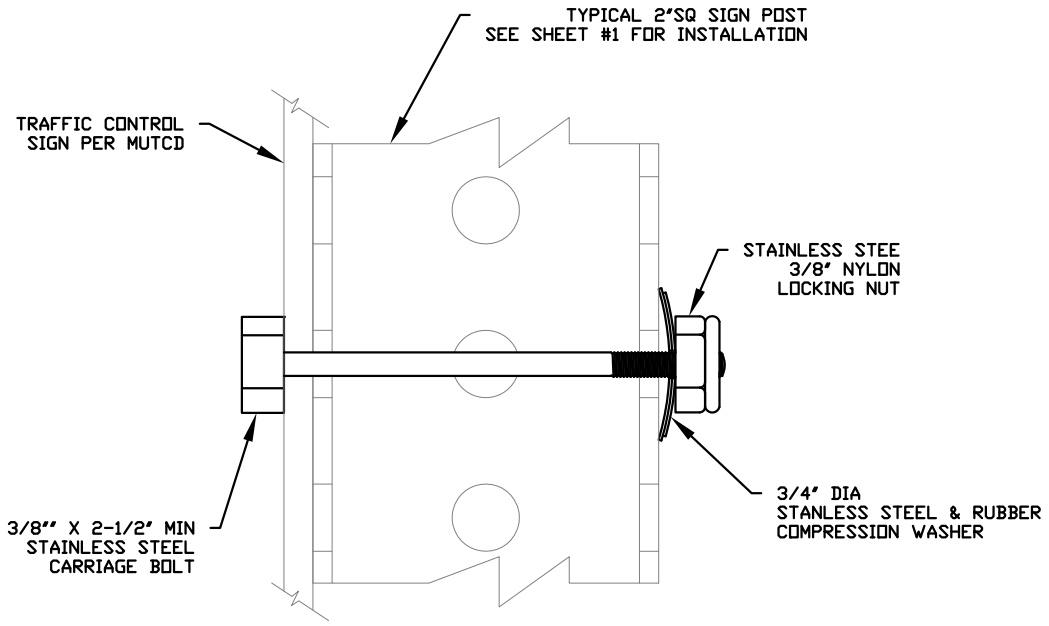

TYPE 2 SIGN MOUNTING

2 BOLTS PER SIGN MIN.

NOTES:

1. SIGNES MOUNTED ON WOOD POSTS WILL USE A 3/8" STANINLESS STEEL CARRIAGE BOLT WITH 3/4" x 1/4" STAINLESS STEEL WASHER AND 3/8" STAINLESS STEEL NYLON LOCKING NUT.

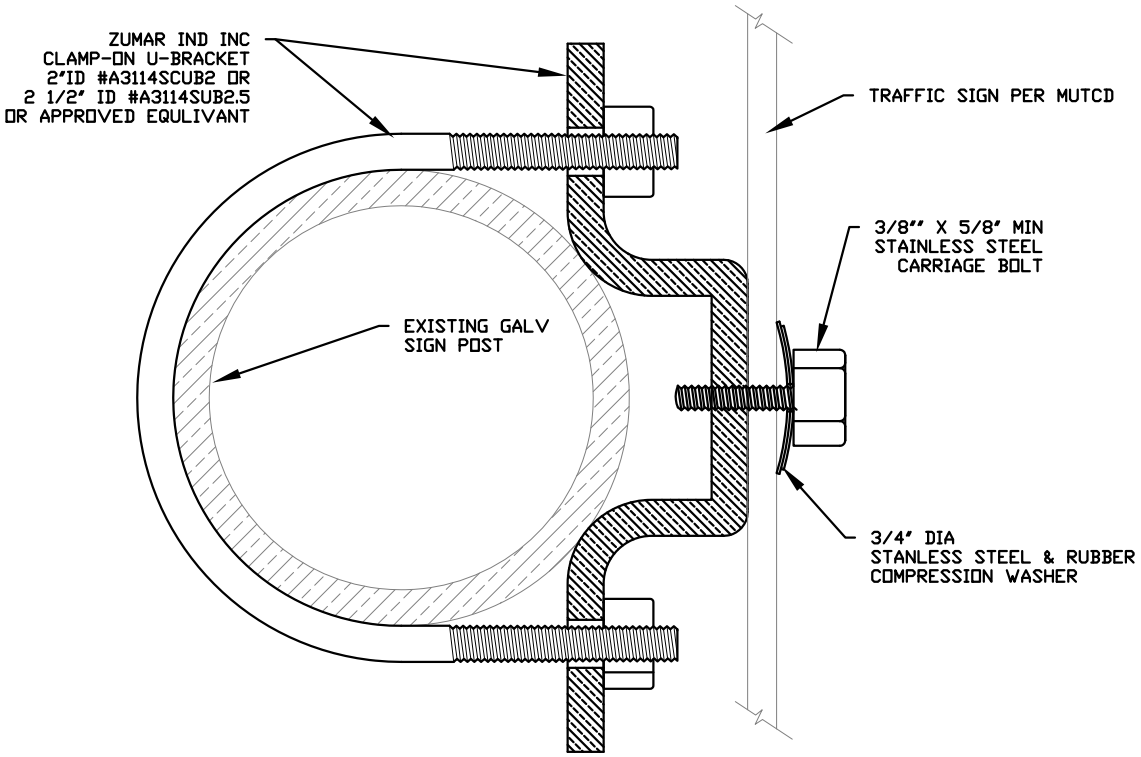

2-3/8"OD ROUND POST SIGN HARDWARE

2 BRACKET ASSEMBLIES PER SIGN MIN.

CITY OF EVERETT PUBLIC WORKS DEPARTMENT	TRAFFIC SIGN INSTALLATION (SHEET 4 OF 4)	11-21-2013 Date: 716 COE Std Dwg:

T:\ACad\eps-coe design & constr specs for development\CURRENT\std detail dwgs\Dwg Files\STD716.dwg, 2/21/2014 4:06:05 PM

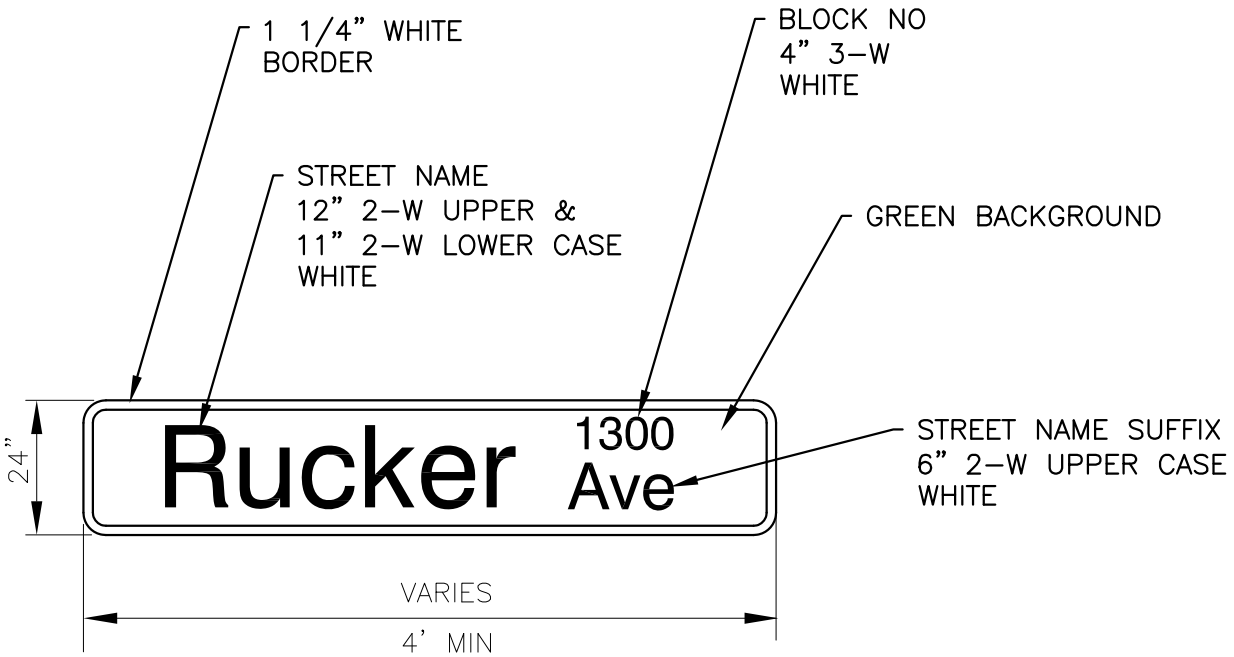

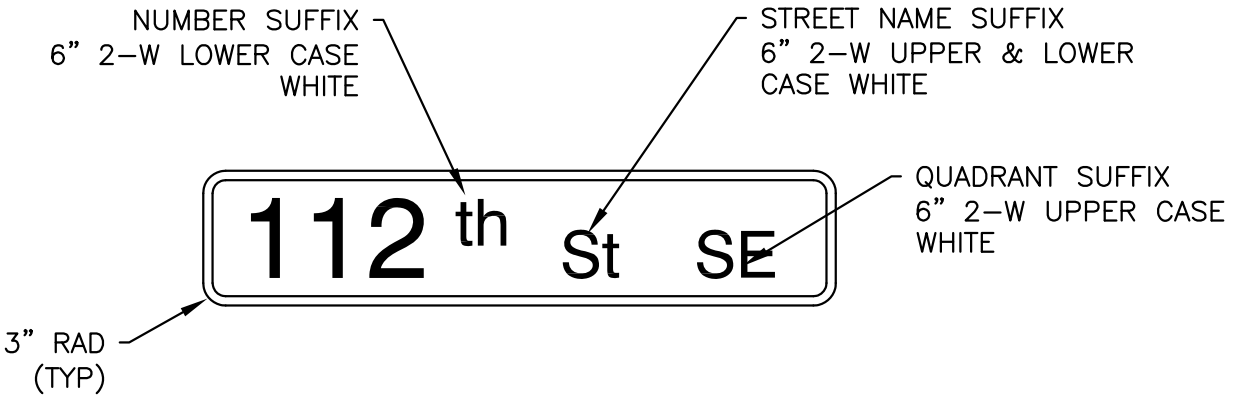

NOTES:

1. TEXT SHALL BE CAPS AND LOWER CASE CLEARVIEW HIGHWAY SERIES "2-W" LETTERS AND HIGHWAY SERIES "3-W" NUMBERS.
2. MATERIAL SHALL BE .10" ANODIZED ALUMINUM SHEET STOCK UNLESS OTHERWISE SPECIFIED. WITH SUPER ENGINEERING GRADE REFLECTIVE BACKGROUND AND TEXT.
3. SIGNS CAN ALSO BE USED ON SPAN WIRE INSTALLATIONS.
4. SUBMIT DESIGN LAYOUT FOR APPROVAL PRIOR TO FABRICATION.

CITY OF EVERETT PUBLIC WORKS DEPARTMENT	MASTARM/LUMINAIRE STREET NAME SIGN (SHEET 1 OF 2)	11-21-2013 Date: 717 COE Std Dwg:

T:\ACad\eps-coe design & constr specs for development\CURRENT\std detail dwgs\Dwg Files\STD717.dwg, 2/21/2014 4:06:42 PM

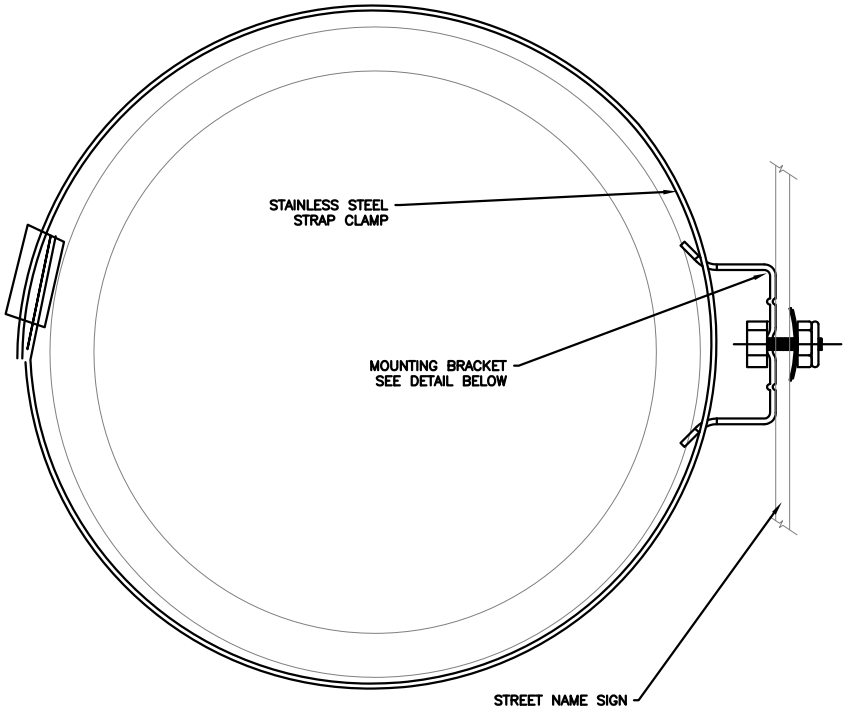

TYP STREET NAME MOUNTING

SCALE: 1"= NTS

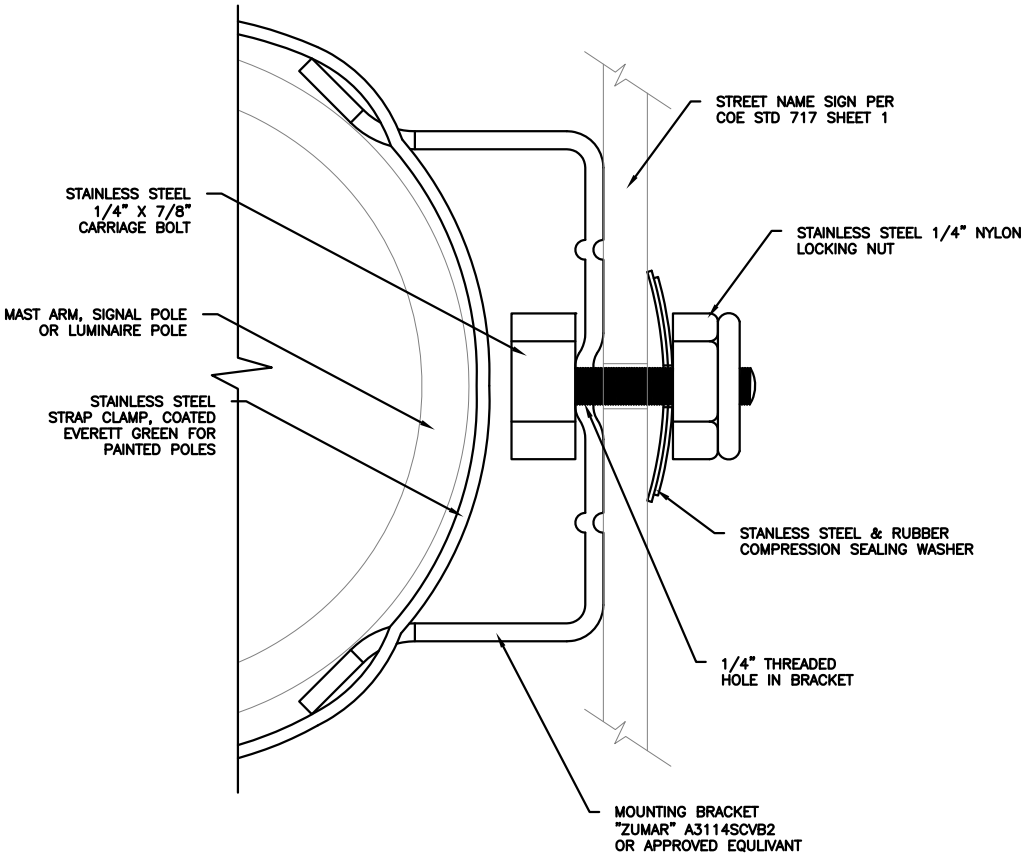

BRACKET DETAIL

SCALE: 1"= NTS

CITY OF EVERETT PUBLIC WORKS DEPARTMENT	MASTARM/LUMINAIRE STREET NAME SIGN (SHEET 1 OF 2)	11-21-2013 Date: 717 COE Std Dwg:

T:\ACad\eps-coe design & constr specs for development\CURRENT\std detail dwgs\Dwg Files\STD717.dwg, 2/21/2014 4:07:11 PM

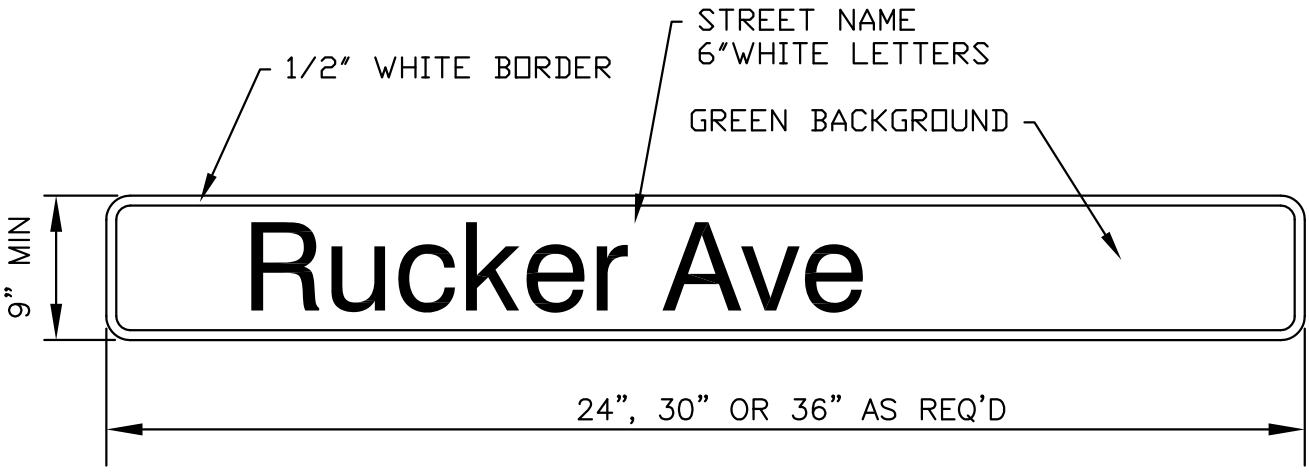

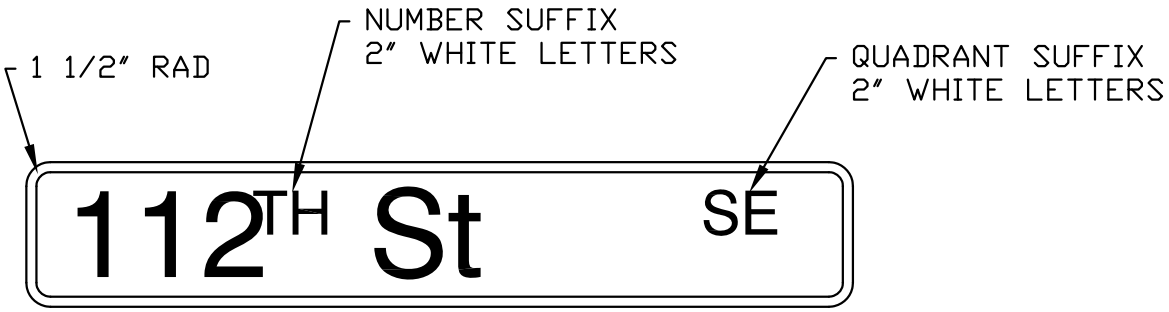

NOTES:

1. ALL SIGNS SHALL HAVE HIGH INTENSITY PRISMATIC SHEETING WITH GRAFFITI COATING. STREET NAME SHALL BE 6" WHITE LETTERING USING CLEAR VIEW FONT.

2. MATERIAL SHALL BE .08" ANODIZED ALUMINUM SHEET STOCK UNLESS OTHERWISE SPECIFIED.

3. BACK SIDE OF SIGN TO BE THE SAME AS THE FRONT.

4. ALL LETTERING, BORDERS AND BACK GROUND SHALL BE HIGH INTENSITY PRISMATIC SHEETING PER FHWA SHEETING GUIDE LINES ASTM D4956-04 "TYPE" DESIGNATIONS.

CITY OF EVERETT PUBLIC WORKS DEPARTMENT	POST MOUNTED STREET SIGN	6-24-2011 Date: 718 COE Std Dwg:

T:\ACad\eps-coe design & constr specs for development\CURRENT\std detail dwgs\Dwg Files\STD718.dwg, 2/21/2014 4:07:48 PM

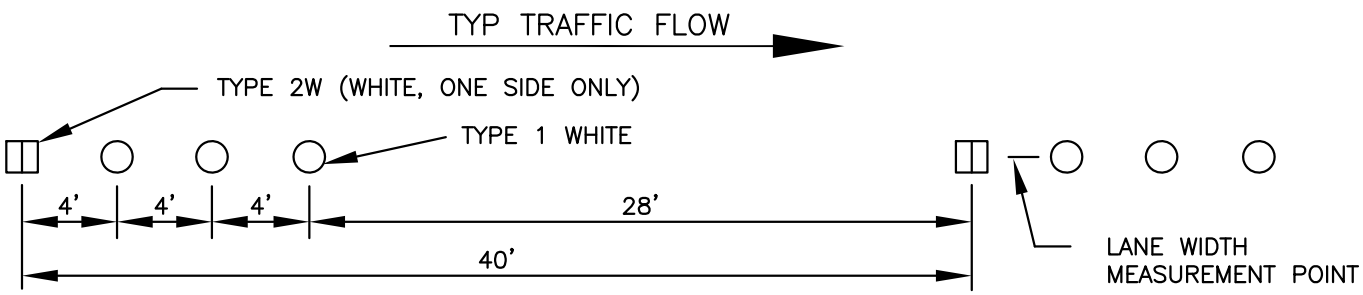

LANE LINE

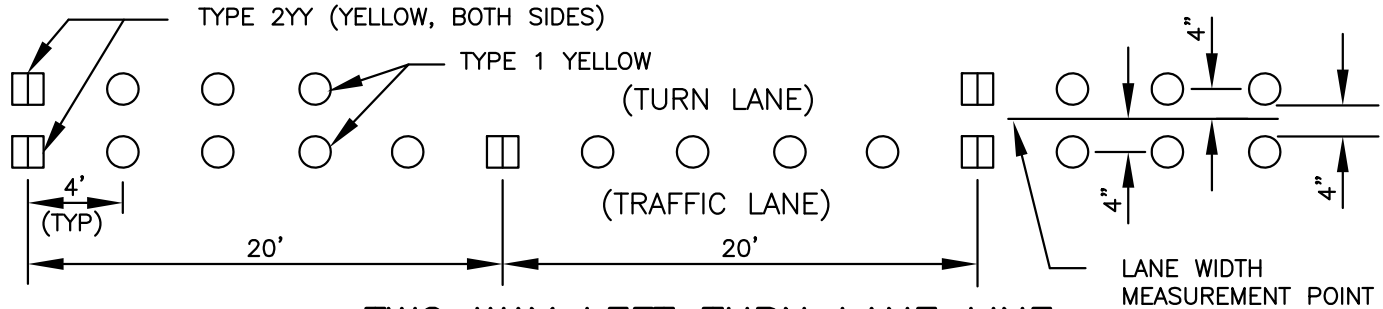

TWO WAY LEFT TURN LANE LINE

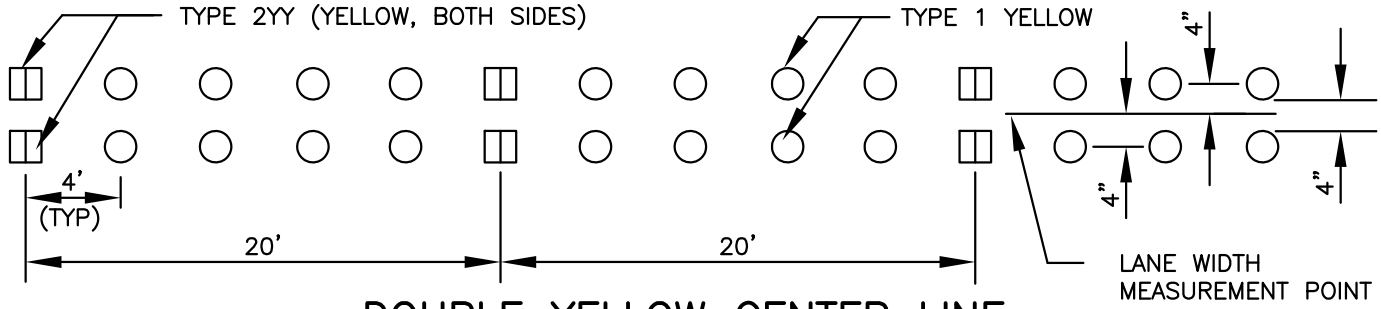

DOUBLE YELLOW CENTER LINE

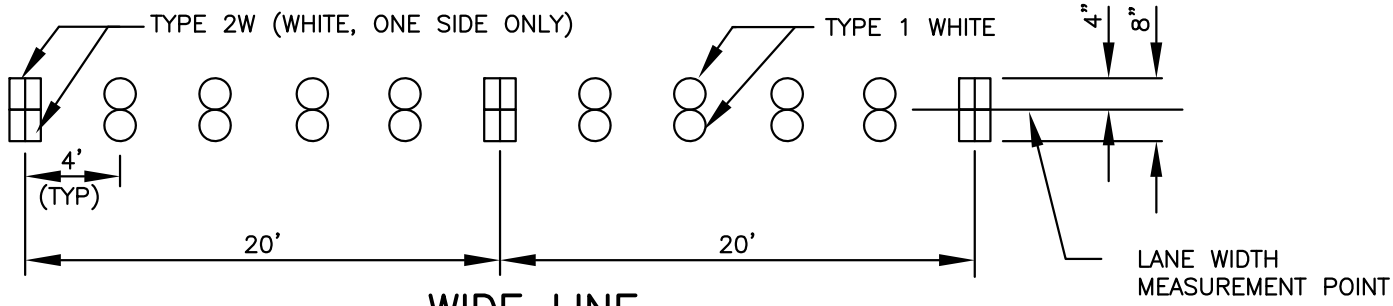

WIDE LINE

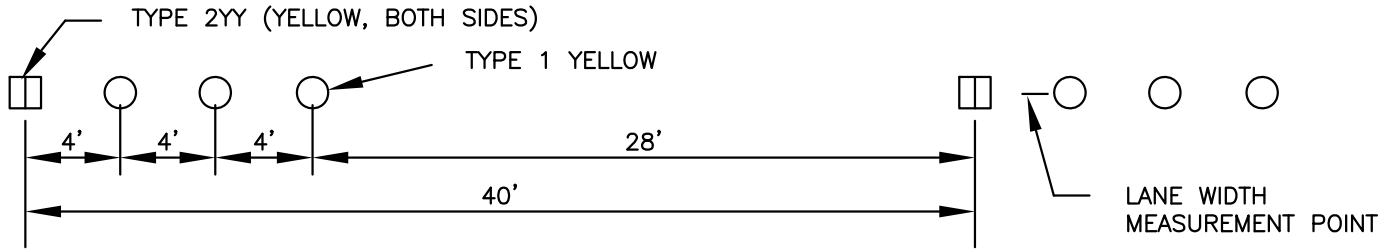

SKIP CENTER LINE

CITY OF EVERETT
PUBLIC WORKS DEPARTMENT

RAISED PAVEMENT MARKING (RPM) LANE LINE DETAILS
(SHEET 1 OF 2)

6-24-2011
Date:

719
COE Std Dwg:

T:\ACad\eps-coe design & constr specs for development\CURRENT\std detail dwgs\Dwg Files\STD719.dwg, 2/21/2014 4:09:13 PM

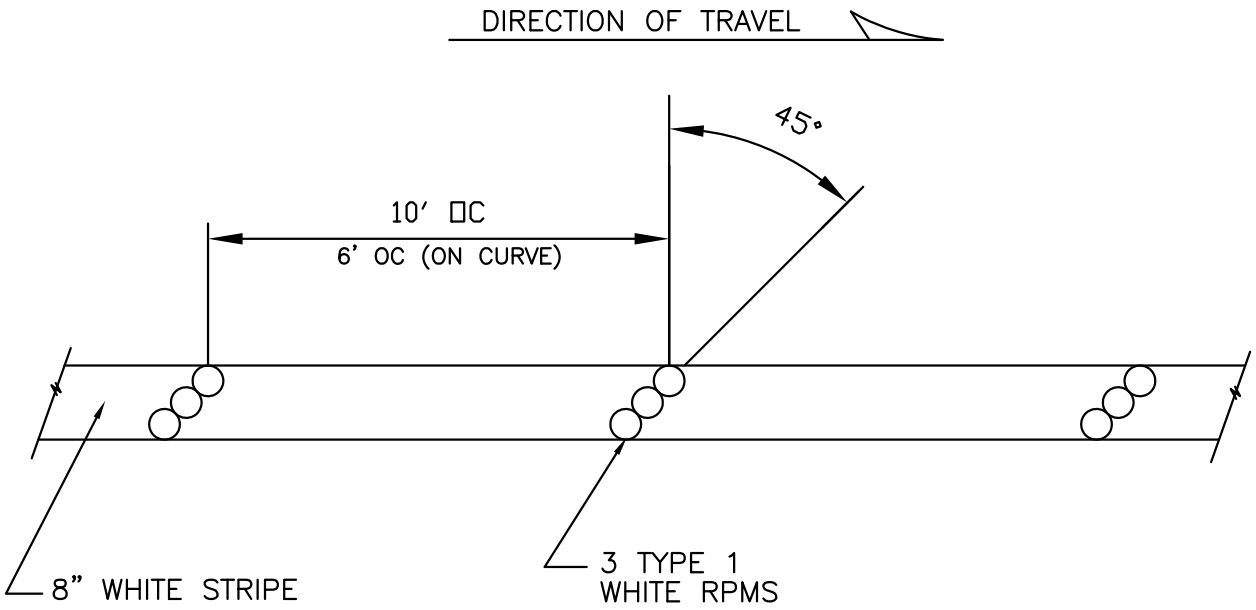

ISLAND CHEVRON

CITY OF EVERETT
PUBLIC WORKS DEPARTMENT

RAISED PAVEMENT MARKING (RPM) LANE LINE DETAILS
(SHEET 2 OF 2)

6-24-2011
Date:

719
COE Std Dwg:

T:\ACad\eps-coe design & constr specs for development\CURRENT\std detail dwgs\Dwg Files\STD719.dwg, 2/21/2014 4:09:41 PM

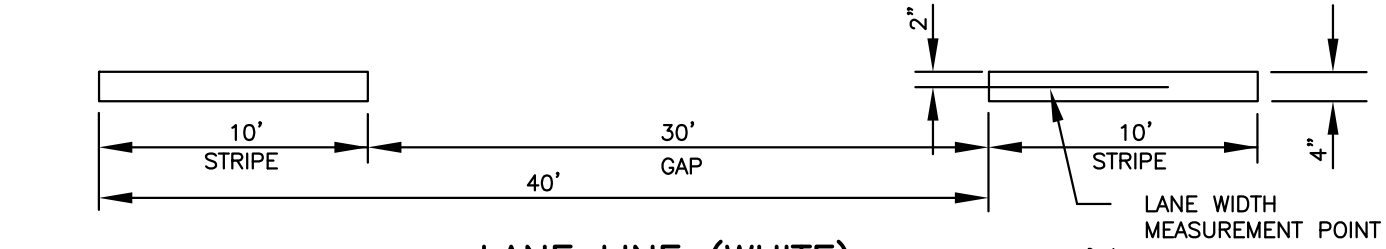

LANE LINE (WHITE)

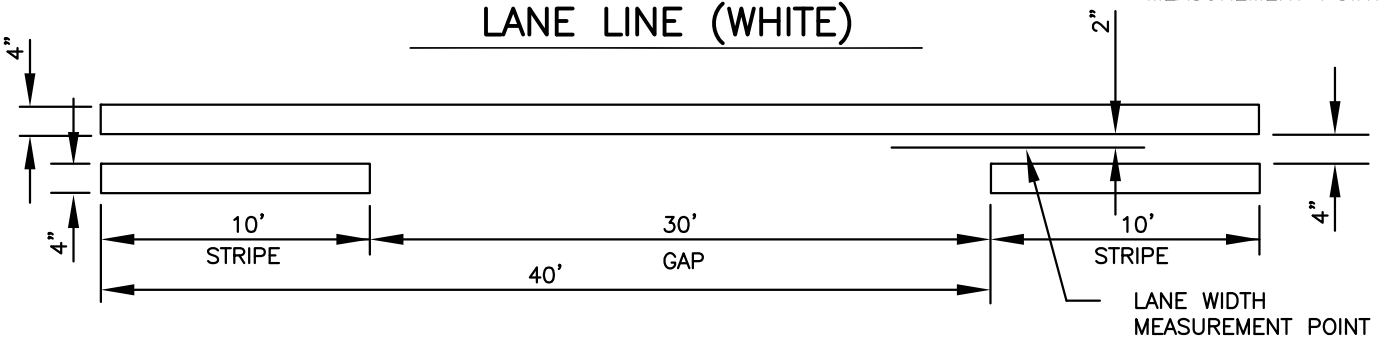

TWO WAY LEFT TURN LANE LINE (YELLOW)

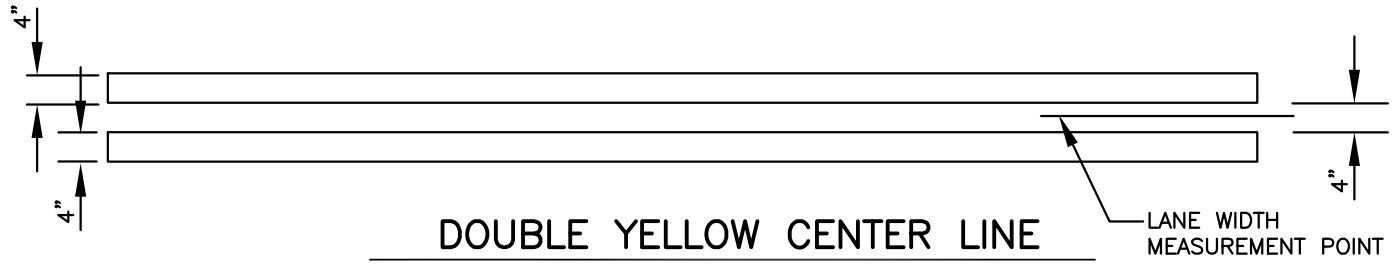

DOUBLE YELLOW CENTER LINE

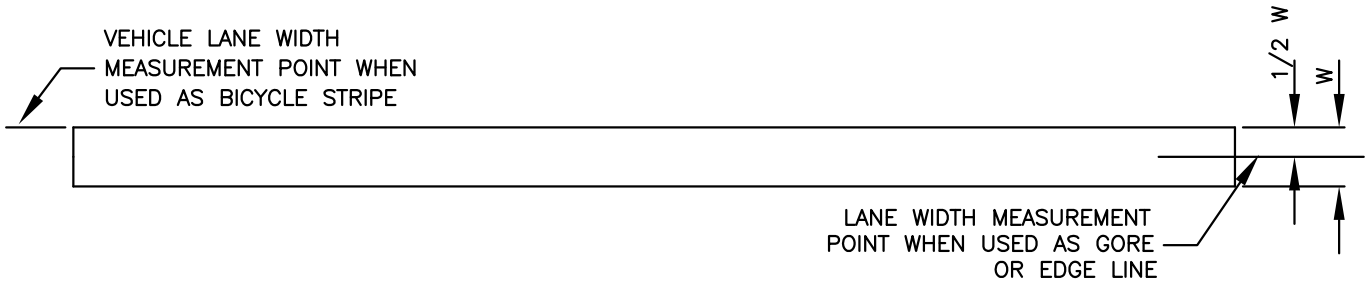

GORE, X=8"; EDGE, W=4"; BICYCLE, W= 8"

WIDE, EDGE AND BICYCLE LINE (WHITE)

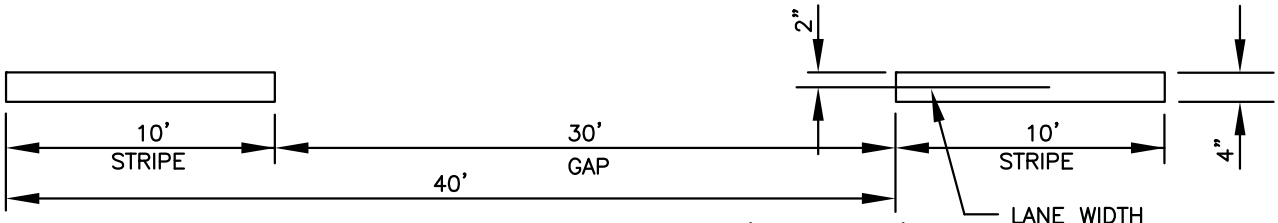

SKIP CENTER LINE (YELLOW)

NOTES:

1. REFERENCES SEE STANDARD DRAWING 722
2. MATERIAL THICKNESS SHALL BE MIN. 25 MILS, CONSISTING OF TWO COATS PAINT OR EQUIVALENT HOT TAPE OR METHYL METHACRYLATE (MMA).

CITY OF EVERETT
PUBLIC WORKS DEPARTMENT

ROADWAY STRIPING DETAILS

6-24-2011
Date:

720
COE Std Dwg:

T:\ACad\eps-coe design & constr specs for development\CURRENT\std detail dwgs\Dwg Files\STD720.dwg, 2/21/2014 4:10:32 PM

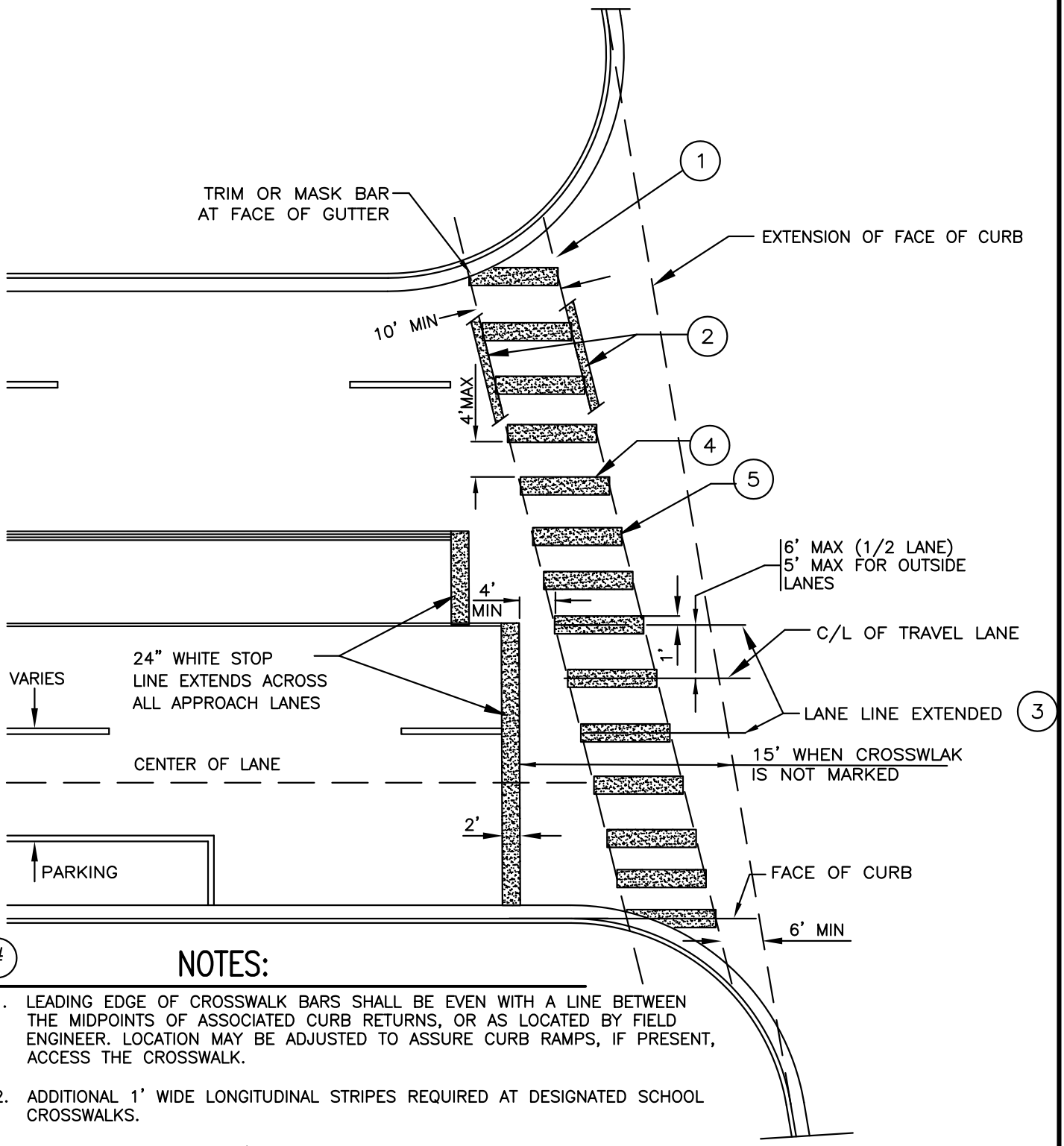

NOTES:

1. LEADING EDGE OF CROSSWALK BARS SHALL BE EVEN WITH A LINE BETWEEN THE MIDPOINTS OF ASSOCIATED CURB RETURNS, OR AS LOCATED BY FIELD ENGINEER. LOCATION MAY BE ADJUSTED TO ASSURE CURB RAMPS, IF PRESENT, ACCESS THE CROSSWALK.
2. ADDITIONAL 1' WIDE LONGITUDINAL STRIPES REQUIRED AT DESIGNATED SCHOOL CROSSWALKS.
3. FOR LANE WIDTHS OF 12' AND LESS CENTER LEADING EDGE OF BARS ON MIDPOINT OF LANE LINE EXTENDED.
4. FOR LANE WIDTHS GREATER THAN 12' SPACE BARS EVENLY BETWEEN LANE LINES WITH A MAXIMUM SPACE BETWEEN STRIPES OF 4'.
5. 2' WIDE x 10' LONG CROSSWALK BARS PARALLEL TO DIRECTION OF VEHICLE TRAVEL.
6. REFERENCES SEE STANDARD DRAWING 722.

CITY OF EVERETT PUBLIC WORKS DEPARTMENT	TYPICAL STOPLINE AND CROSSWALK LAYOUT	6-24-2011 Date: 721 COE Std Dwg:

T:\ACad\eps-coe design & constr specs for development\CURRENT\std detail dwgs\Dwg Files\STD721.dwg, 2/21/2014 4:11:30 PM

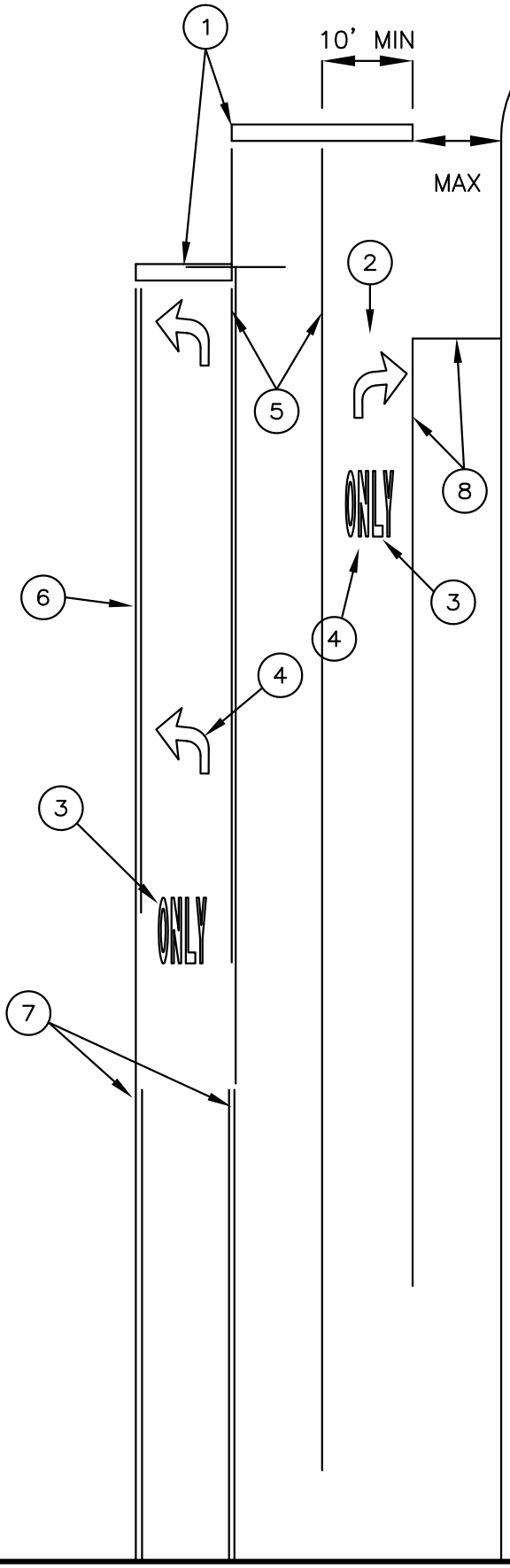

NOTES

1. STOP LINE AS REQUIRED BY ENGINEER, SEE CONSTRUCTION PLANS.
2. PAVEMENT MARKINGS (SYMBOLS, ETC) PER WSDOT/APWA STANDARD PLAN M24.40-01.
3. SIZE OF LEGENDS SUCH AS "ONLY", "SCHOOL", "STOP", ETC SHALL BE PER THE CURRENT MUTCD 3B, 7C. ONLY TO BE USED SPECIFICALLY FOR DROP LANES.
4. INTERMEDIATE PAVEMENT MARKINGS AND LEGENDS AS REQUIRED BY ENGINEER SEE PLANS.
5. 8" WHITE WIDE LINE, LENGTH PER CONSTRUCTION PLAN.
6. DOUBLE YELLOW CENTER STRIPE.
7. TWO WAY LEFT TURN STRIPE.
8. 4" WHITE PARKING STRIPE.

REFERENCES:

A. WSDOT STANDARD SPECIFICATIONS SECTIONS 8-22, 9-34 AND AMENDMENTS.

B. MUTCD PART 2, 3 AND 9C.

C. WSDOT/APWA STANDARD PLANS SECTION "M" ROADWAY DELINEATION.

CITY OF EVERETT
PUBLIC WORKS DEPARTMENT

TURN POCKET DETAIL

6-24-2011
Date:

722
COE Std Dwg:

T:\ACad\eps-coe design & constr specs for development\CURRENT\std detail dwgs\Dwg Files\STD722.dwg, 2/21/2014 4:12:19 PM

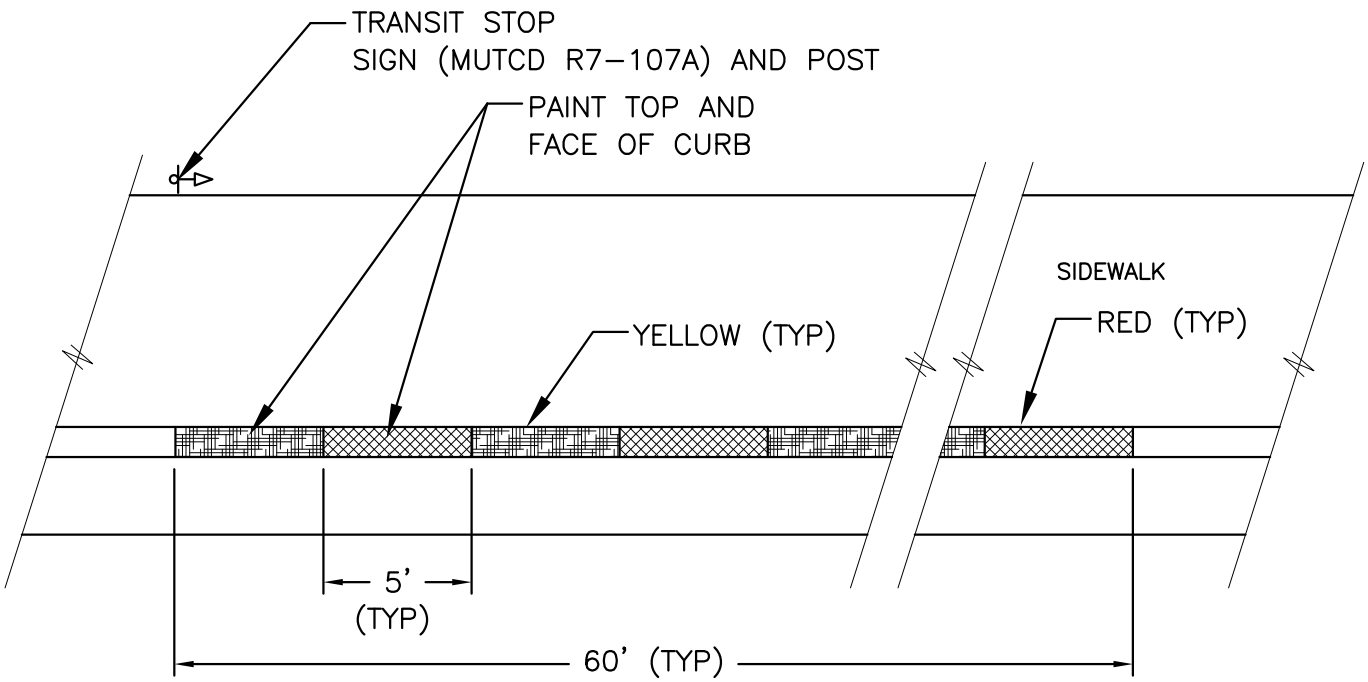

PLAN

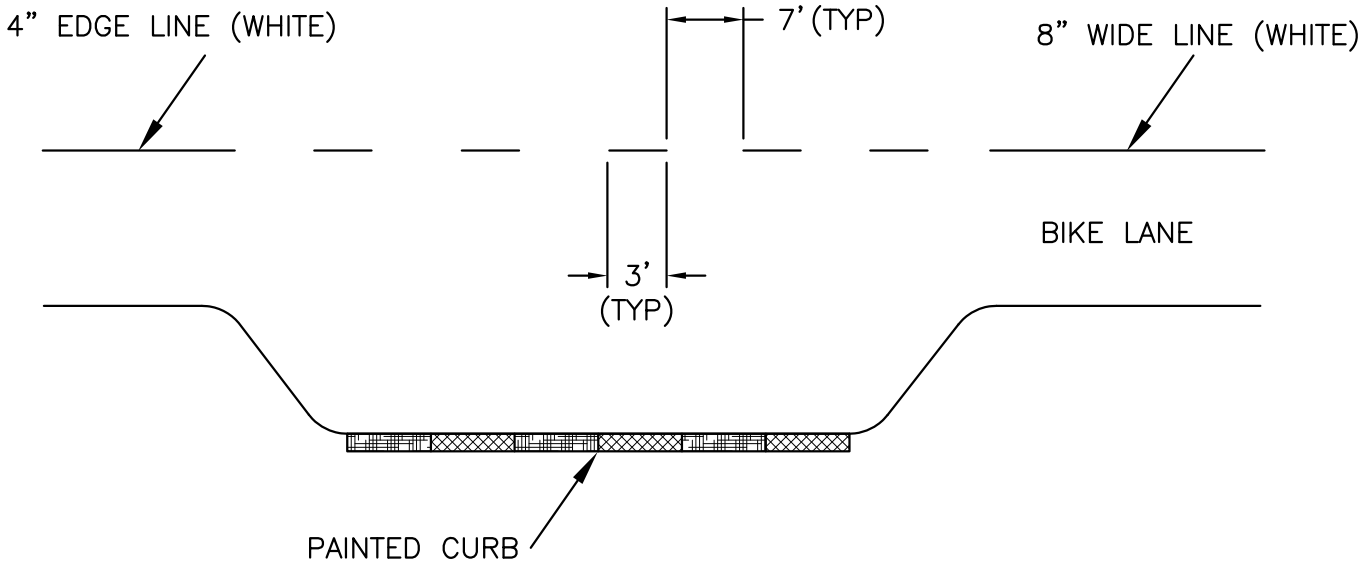

BUS PULL OUT

CITY OF EVERETT PUBLIC WORKS DEPARTMENT	TRANSIT STOP STRIPING	6-24-2011 Date: 723 COE Std Dwg:

T:\ACad\eps-coe design & constr specs for development\CURRENT\std detail dwgs\Dwg Files\STD723.dwg, 2/21/2014 4:13:37 PM

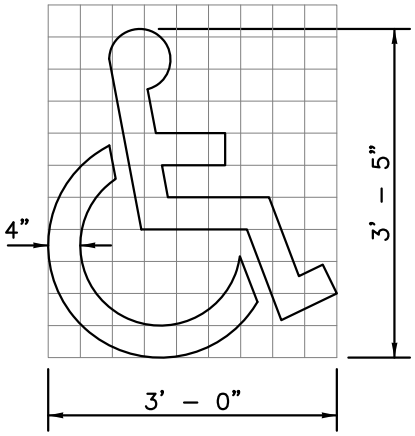

GRID IS 4" SQUARE

ACCESS PARKING SPACE SYMBOL (STANDARD)

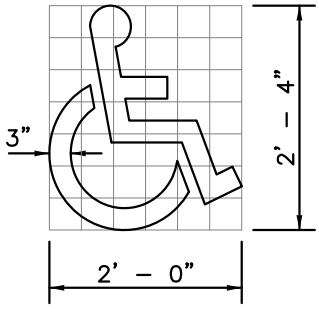

GRID IS 4" SQUARE

ACCESS PARKING SPACE SYMBOL (MINIMUM)

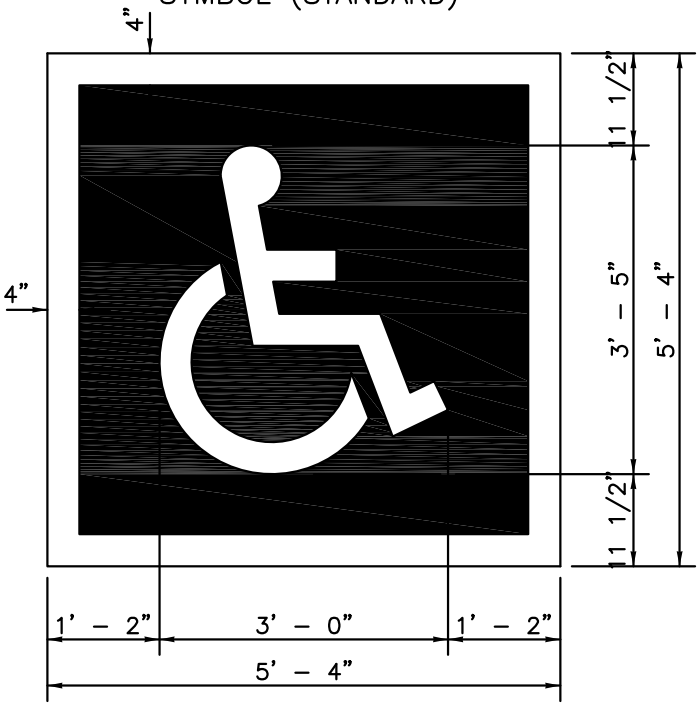

ACCESS PARKING SPACE SYMBOL (STANDARD)
WITH BLUE BACKGROUND AND WHITE BORDER
(FOR USE IN PRIVATE PARKING AREAS ONLY)

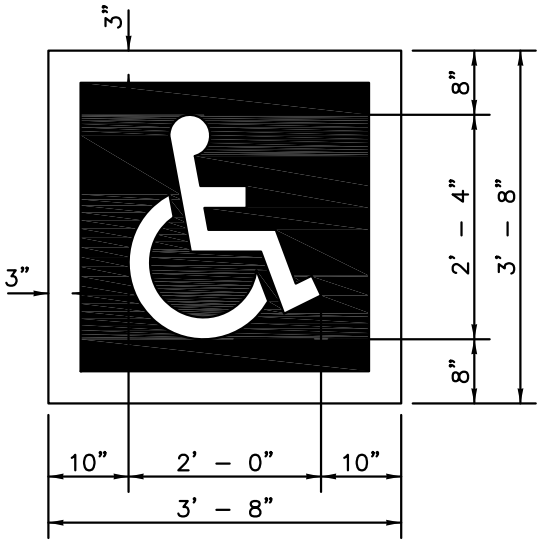

ACCESS PARKING SPACE SYMBOL (MINIMUM)
WITH BLUE BACKGROUND AND WHITE BORDER
(FOR USE IN PRIVATE PARKING AREAS ONLY)

CITY OF EVERETT
PUBLIC WORKS DEPARTMENT

ACCESS PARKING SPACE SYMBOL
(BASED ON WADOT/APWA STD PLAN M–24.60–00 3/4/05)

5–5–2005
Date:

724
COE Std Dwg:

T:\ACad\eps-coe design & constr specs for development\CURRENT\std detail dwgs\Dwg Files\STD724.dwg, 2/21/2014 4:14:58 PM

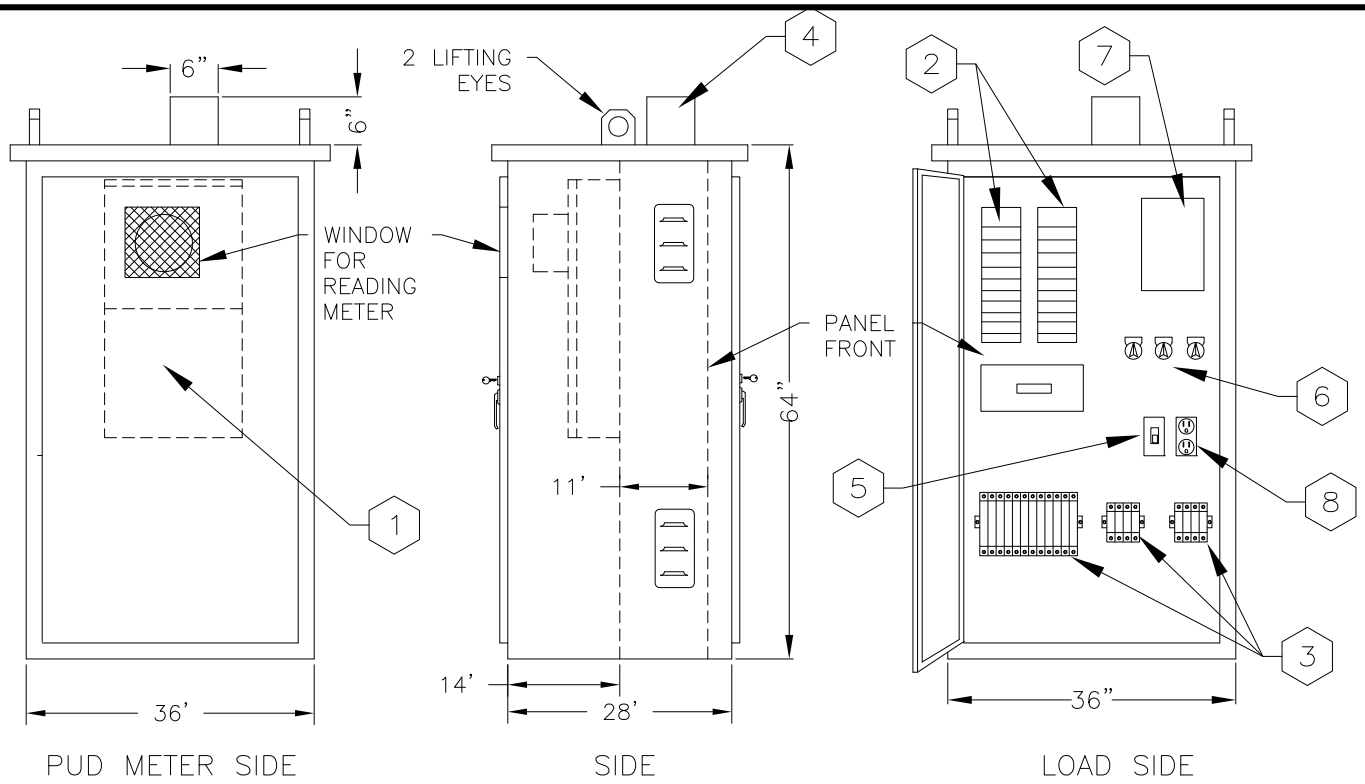

COMPONENT SCHEDULE

1. METERBASE: 400 AMP MAX, 320 CONT, 4 JWA, AW #324N WITH BYPASS BLOCKS (CONTRACTOR TO VERIFY WITH PUD.

2. PANELBOARD: 120V/240 VAC, 400 AMP, 1 PHASE, 3 WIRE, COPPER BUS SERIES RATED AT 65 KAIC, 30 CKT INTERIOR. MAIN BREAKER 300 AMP, 2 POLE, "CUTLER HAMMER" #DK2300, "CUTLER HAMMER" TYPE BAB BOLT-ON BRANCH BREAKERS:
   - 2 – 30/2 STREET LIGHTING BRANCH (PROVISIONS FOR 2 MORE).
   - 2 – 30/2 ORNAMENTAL LIGHTING BRANCH
   - 2 – 30/1 SIGNAL BRANCH
   - 1 – 15/1 CONTROL CKT BRANCH.
   - 1 – 20/1 RECEPTACLE BRANCH
   - 2 – 20/1 SPARE BRANCH
   - 12 – 20/1 HOLIDAY LIGHTING BRANCH.
   - 4 – SPARE SPACE

3. CONTACTOR: 30 A, LIGHTING RATED, 120 VAC COIL.
   2 – REQUIRED, 4-POLE, STREET LIGHTING & ORNAMENTAL LIGHTING (PROVISIONS FOR 1 MORE).
   1 – REQUIRED, 12-POLE, HOLIDAY LIGHTING

4. PHOTOCELL: 1800 WATT, 105 TO 305 VAC, PHOTO DIODE TYPE PER WSDOT SPEC, ALR #SST-PV-IES.

5. PHOTO-CELL BYPASS SWITCH SPDT, 20 AMP, 277 VOLT RATED "TEST SWITCH".

6. CONTROL SWITCH: 30MM, HOA SWITCH SQ D #9001KS43B.
   3-REQUIRED: STREET LTG, ORNAMENTAL LTG, HOLIDAY LIGHTING.

7. TIMER: 24 HR, 120 VAC, 40 AMP, WITH SPRING WOUND CARRYOVER WIRED IN SERIES WITH PHOTOCELL, FOR ORNAMENTAL LTG & HOLIDAY LIGHTING.

8. CONVENIENCE OUTLET: DUPLEX RECEPTACLE, GFCI, 120 VAC, 20A.

CITY OF EVERETT PUBLIC WORKS DEPARTMENT	400 AMP SERVICE CABINET SHEET 1 OF 4	6-7-2012 Date: 801A COE Std Dwg:

T:\ACad\eps-coe design & constr specs for development\CURRENT\std detail dwgs\Dwg Files\STD801A.dwg, 2/21/2014 4:16:24 PM

CABINET FABRICATION NOTES

CABINET: NEMA 3R, PADMOUNT, WELDED SEAM CONSTRUCTION, #12 PRE-GALVANIZED STEEL, OPEN BOTTOM WITH 2" INSIDE RETURN, 2 SCREENED AND GASKETED VENTS AND U.L. LISTED. FOUNDATION PER CITY STD DWG 826.

DOORS: HEAVY DUTY CONCEALED HINGE (LIFT-OFF TYPE) CLOSED CELL NEOPRENE GASKET AND PADS. METER DOOR WITH POLISHED WIRE GLASS WINDOW.

LOCKABLE VAULT HANDLES: STAINLESS STEEL

PANEL DOOR: WITH 3 POINT LATCH, TUMBLER LOCK, KEYED FOR "BEST" LOCK AND SUPPLIED WITH A BLUE CONSTRUCTION CORE.
METER DOOR: SINGLE POINT LATCH WITH PADLOCK. HANDLE TO OPEN AWAY FROM KEY/LOCK.

INCLUDE LIFTING EYES ON CABINET ROOF.

PAINT: ZINC RICH ALUMINUM OUTSIDE, INSIDE POLYESTER POWDER COAT WHITE.

ALL UNFUSED POWER SHALL BE PROTECTED FROM ACCIDENTAL CONTACT BY MAINTENANCE PERSONNEL AND ISOLATED IN ENCLOSED RACEWAYS/WIRE GUTTERS.

PANEL BOARDS SHALL EITHER BE TOTALLY ENCLOSED OR PROTECTED WITH A DEAD-FRONT DOOR.

FEEDS TO PANEL BOARDS TO OCCUR DIRECTLY THROUGH BACK OF PANEL BOARD OR VIA ENCLOSED WIRE GUTTER.

T:\ACad\eps-coe design & constr specs for development\CURRENT\std detail dwgs\Dwg Files\STD801A.dwg, 2/21/2014 4:16:58 PM

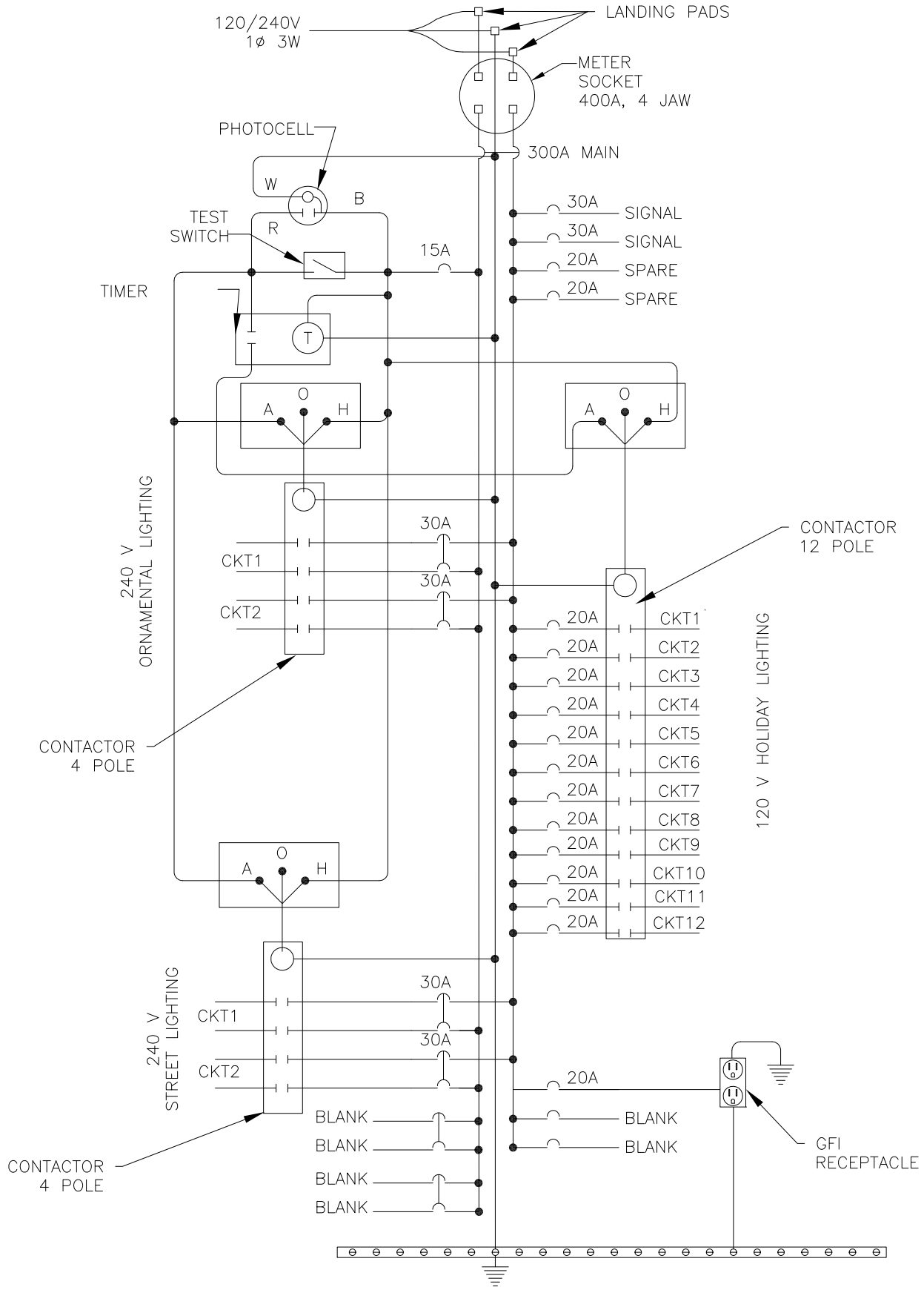

WIRING SCHEMATIC

CITY OF EVERETT **PUBLIC WORKS DEPARTMENT**	400 AMP SERVICE CABINET **SHEET 3 OF 4**	6-7-2012 Date: 801A COE Std Dwg:

T:\ACad\eps-coe design & constr specs for development\CURRENT\std detail dwgs\Dwg Files\STD801A.dwg, 2/21/2014 4:17:21 PM

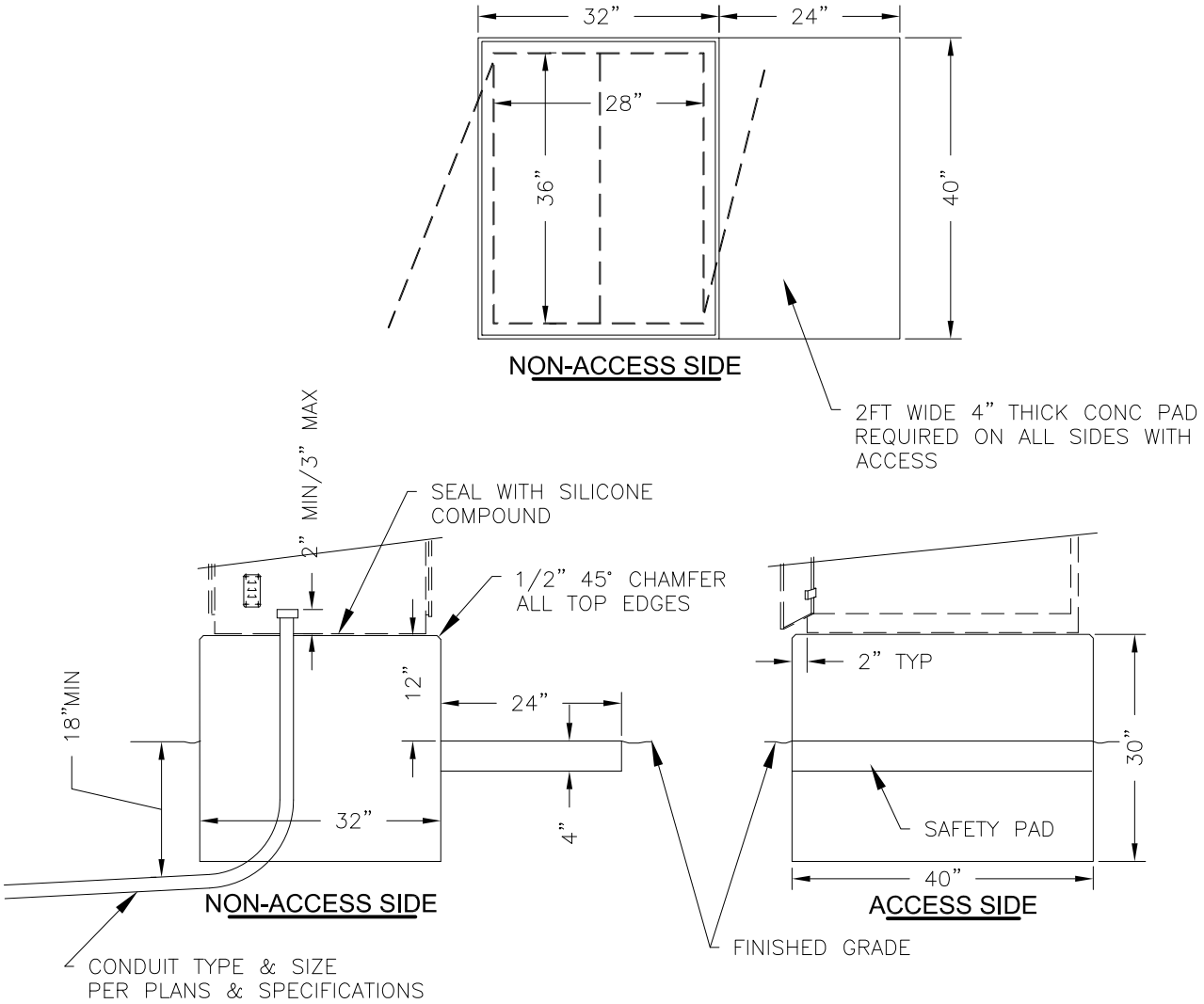

FOUNDATION & PAD NOTES

1. FORMED CONSTRUCTION
2. COMMERCIAL CONCRETE.
3. 1/2" CHAMFER AT FOUNDATION TOP
4. STAINLESS STEEL ANCHOR BOLTS, LOCATION, SIZE AND QUANTITY PER CABINET MFG SPEC.
5. FOUNDATION AND PAD TO SIT ON UNDISTURBED SOIL
6. CONDUIT TO EXTEND 2"MIN TO 3"MAX ABOVE FOUNDATION
7. TOP SURFACE SHALL BE LEVEL.

CITY OF EVERETT PUBLIC WORKS DEPARTMENT	400 AMP SERVICE CABINET SHEET 4 OF 4	6-7-2012 Date: 801A COE Std Dwg:

T:\ACad\eps-coe design & constr specs for development\CURRENT\std detail dwgs\Dwg Files\STD801A.dwg, 2/21/2014 4:17:49 PM

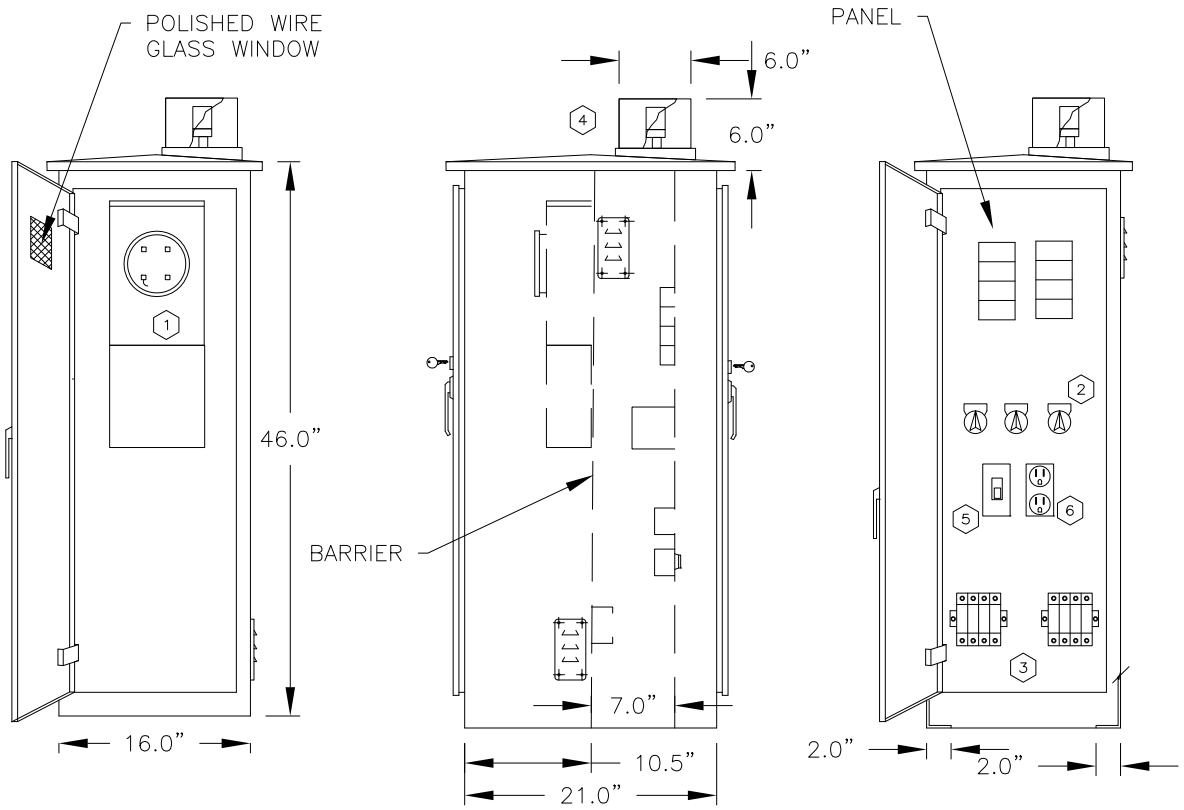

CABINET ENCLOSURE NOTES

CABINET: NEMA 3R, PADMOUNT, WELDED SEAM CONSTRUCTION, #12 PRE-GALVANIZED STEEL, OPEN BOTTOM WITH 2" INSIDE RETURN, 2 SCREENED AND GASKETED VENTS AND U.L. LISTED. FOUNDATION PER CITY STD DWG 826.

DOORS: HEAVY DUTY CONCEALED HINGE (LIFT-OFF TYPE) CLOSED CELL NEOPRENE GASKET AND PADS. METER DOOR WITH POLISHED WIRE GLASS WINDOW.

LOCKABLE VAULT HANDLES: STAINLESS STEEL

PANEL DOOR: WITH 3 POINT LATCH, TUMBLER LOCK, KEYED FOR "BEST" LOCK AND SUPPLIED WITH A BLUE CONSTRUCTION CORE.
METER DOOR: SINGLE POINT LATCH WITH PADLOCK. HANDLE TO OPEN AWAY FROM KEY/LOCK.

INCLUDE LIFTING EYES ON CABINET ROOF.

PAINT: ZINC RICH ALUMINUM OUTSIDE, INSIDE POLYESTER POWDER COAT WHITE.

ALL UNFUSED POWER SHALL BE PROTECTED FROM ACCIDENTAL CONTACT BY MAINTENANCE PERSONNEL AND ISOLATED IN ENCLOSED RACEWAYS/WIRE GUTTERS.

PANEL BOARDS SHALL EITHER BE TOTALLY ENCLOSED OR PROTECTED WITH A DEAD-FRONT DOOR.

FEEDS TO PANEL BOARDS TO OCCUR DIRECTLY THROUGH BACK OF PANEL BOARD OR VIA ENCLOSED WIRE GUTTER.

(#) COMPONENT SCHEDULE

1. METERBASE: 200 AMP, 4 JAW, AW #U264 WITH BYPASS BLOCKS (CONTRACTOR TO VERIFY WITH PUD).
2. PANELBOARD: 120V/240 200 AMP, 1 PHASE, 3 WIRE, COPPER BUS SERIES RATED AT 65 KAIC, 18 CKT INTERIOR. MAIN BREAKER 200 AMP, 2 POLE, "CUTLER HAMMER" #ED2200, "CUTLER HAMMER" TYPE BAB BOLT-ON BRANCH BREAKERS:
   - 2 – 30/2 STREET LIGHTING BRANCH.
   - 1 – 30/2 ORNAMENTAL LIGHTING BRANCH
   - 1 – 30/1 SIGNAL BRANCH
   - 1 – 15/1 CONTROL CKT BRANCH.
   - 1 – 20/1 RECEPTACLE BRANCH
   - 2 – 20/1 SPARE BRANCH
   - 7 – SPARE SPACE.
3. CONTACTOR: 30 A, LIGHTING RATED, 4 POLE, 120 VAC COIL, 2 REQUIRED.
4. PHOTOCELL: 1800 WATT, 105 TO 305 VAC, PHOTO DIODE TYPE PER WSDOT SPEC, ALR #SST-PV-IES.
5. PHOTO-CELL BYPASS SWITCH HOA, 30 MM, "SQ D #9001KS43B".
6. CONVENIENCE OUTLET: DUPLEX RECEPTACLE, 120 VAC, GFCI. 125 VAC, 20 A.

CITY OF EVERETT PUBLIC WORKS DEPARTMENT	200 AMP SERVICE CABINET FOR METERED SIGNAL & ORNAMENTAL LIGHTING W/PHOTOCELL & STREET LIGHTING SHEET 1 OF 2	6-7-2012 Date: 801C COE Std Dwg:

T:\ACad\eps-coe design & constr specs for development\CURRENT\std detail dwgs\Dwg Files\STD801C.dwg, 2/21/2014 4:18:42 PM

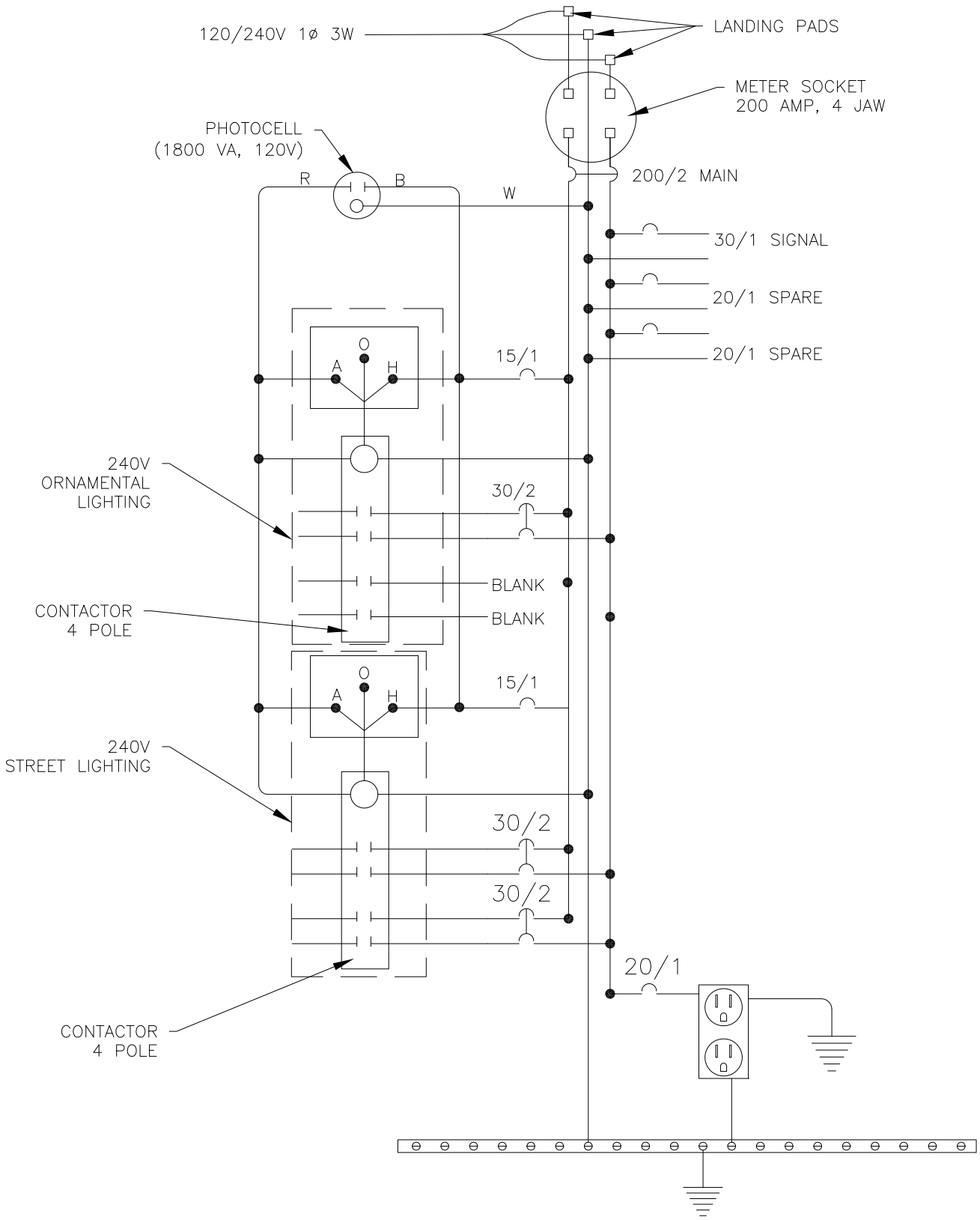

WIRING SCHEMATIC

CITY OF EVERETT **PUBLIC WORKS DEPARTMENT**	200 AMP SERVICE CABINET **FOR METERED SIGNAL & ORNAMENTAL LIGHTING W/PHOTOCELL & STREET LIGHTING** **SHEET 2 OF 2**	6-7-2012 Date: 801C COE Std Dwg:

T:\ACad\eps-coe design & constr specs for development\CURRENT\std detail dwgs\Dwg Files\STD801C.dwg, 2/21/2014 4:19:11 PM

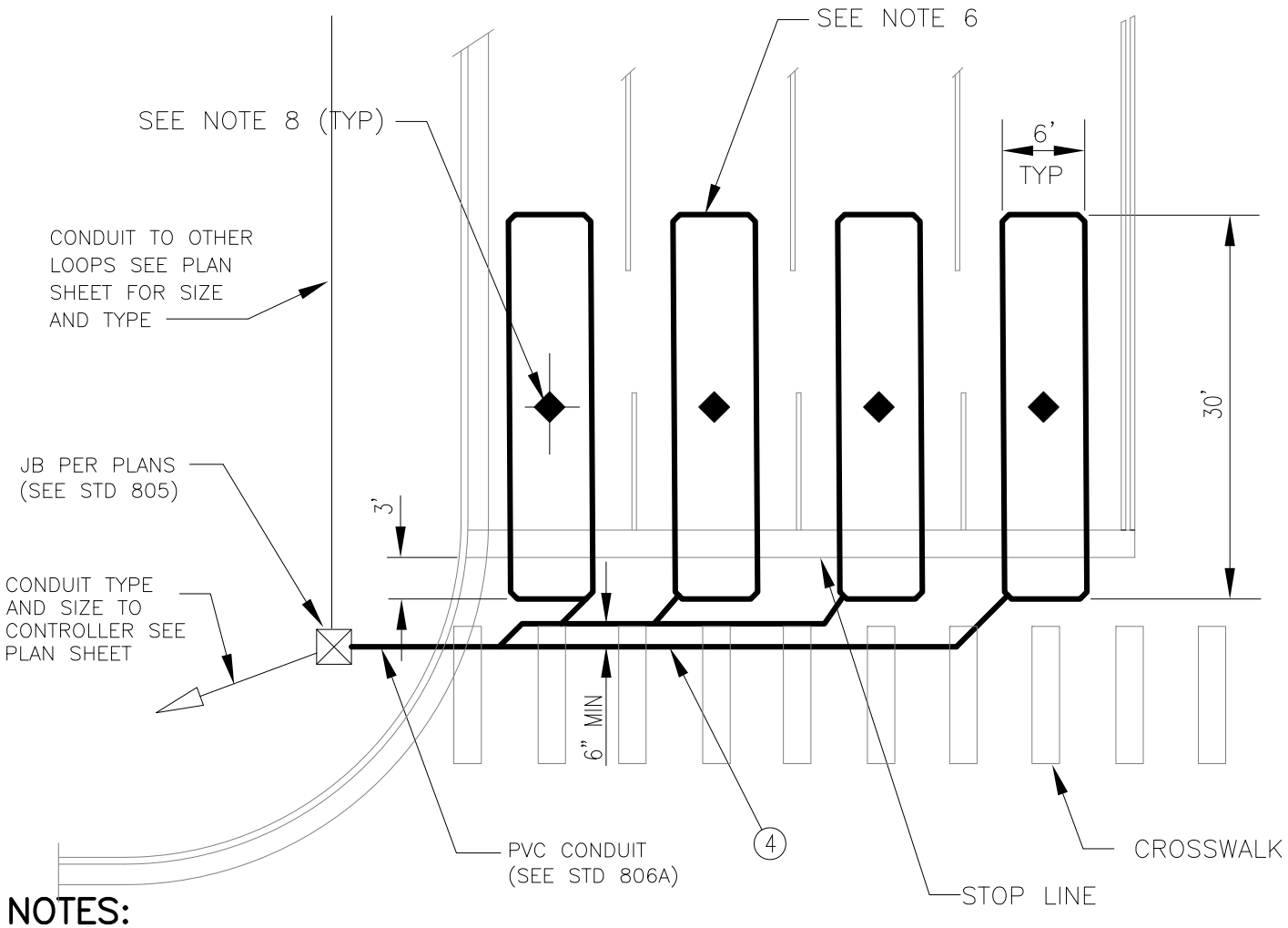

NOTES:

1 UNLESS OTHERWISE INDICATED ON PLANS ALL LOOP DETECTORS SHALL BE CENTERED IN THE LANE.

2 FOR LANES 14' AND WIDER, 8'x30' LOOP WILL BE USED.

3 ALL LOOP DETECTORS SHALL BE BROUGHT BACK AS INDIVIDUALLY TWISTED AND SHIELDED PAIR, THIS SHIELDED PAIR MAY BE CONTAINED IN MULTI-PAIR (INDIVIDUALLY SHIELDED AND TWISTED) CABLE.

4 INSTALL MAXIMUM OF 3 LOOPS PER SAWCUT. ONLY LOOPS ASSOCIATED WITH THE SAME SIGNAL PHASE SHALL BE INSTALLED IN THE SAME SAWCUT.

5 FOR CROSSWALK AND STOPLINE LAYOUT SEE STD DWG 721.

6 FOR LOOP INSTALLATION SPECIFICATIONS SEE STD DWG 806A & 806B.

7 HOME RUNS WILL CROSS ADJACENT LANES AT RIGHT ANGLE TO DIRECTION OF TRAVEL SO AS TO NOT CONFLICT WITH FUTURE LOOP INSTALLATION IN THE ADJACENT LANES.

8 6"x6" WHITE STAMARK TAPE LOCATED AT THE CENTER OF THE LOOP, ORIENTED AS A DIAMOND IN THE LANE TO BE INSTALLED BY CITY FORCES OR STRIPING CONTRACTOR.

EVERETT **CITY OF EVERETT PUBLIC WORKS DEPARTMENT**	TYPICAL TYPE 1 STOP LINE LOOP DETECTION LAYOUT	10-17-2000 Date: 802 COE Std Dwg:

T:\ACad\eps-coe design & constr specs for development\CURRENT\std detail dwgs\Dwg Files\STD802.dwg, 2/21/2014 4:19:59 PM
T:\ACad\EPS-COE Design & Constr Specs for Development\CURRENT\STD DETAIL DWGS\Dwg Files\STD802.dwg <802> NOV 02 2007 12:38:58

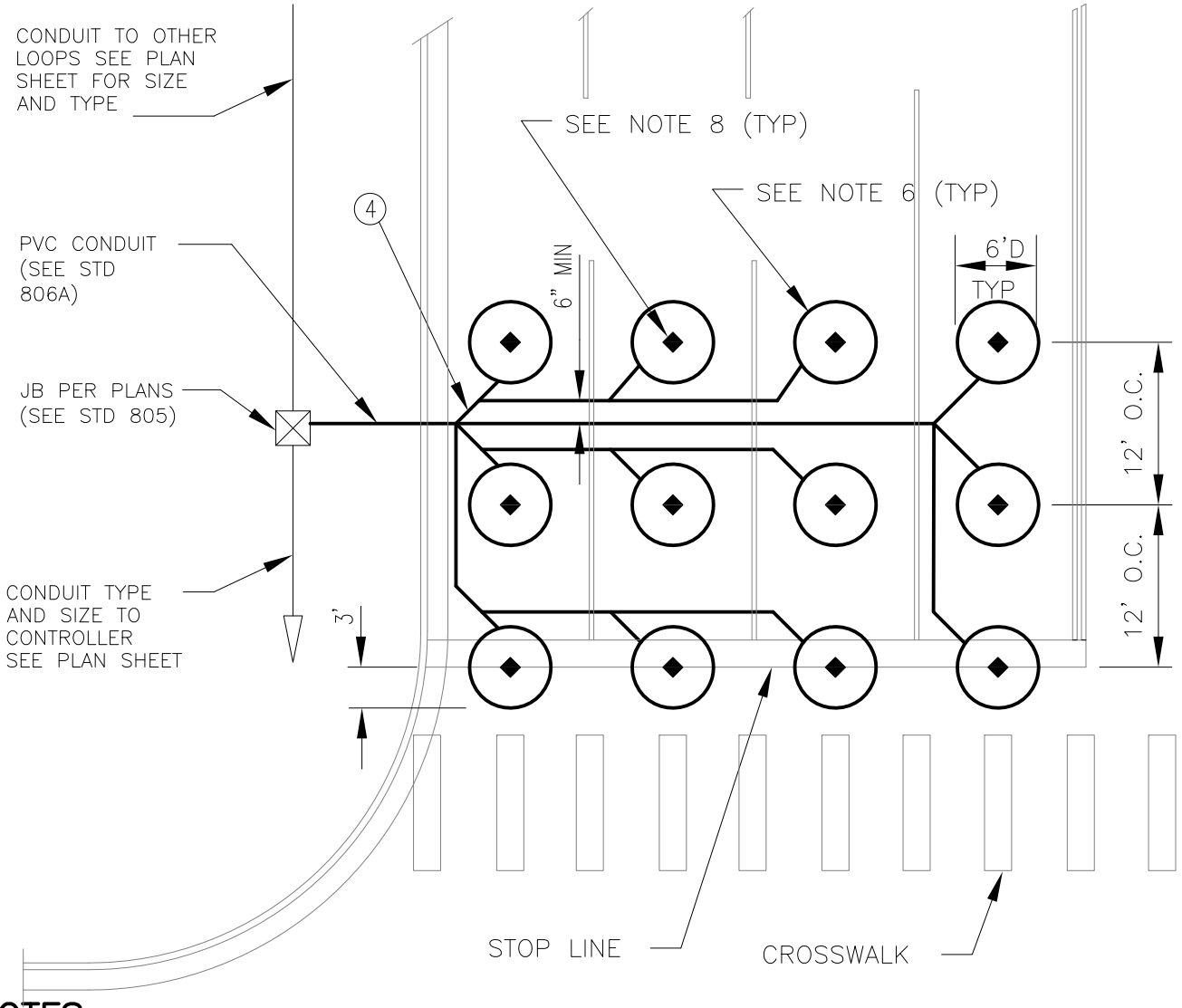

NOTES:

1 UNLESS OTHERWISE INDICATED ON PLANS ALL LOOP DETECTORS SHALL BE CENTERED IN THE LANE.

2 FOR LANES 14' AND WIDER, LOOP LAYOUT WILL BE ADJUSTED IN THE FIELD BY THE ENGINEER.

3 LOOP SPLICING TO LEAD-IN CABLE PER PLANS.

4 INSTALL MAXIMUM OF 3 LOOPS PER SAWCUT. ONLY LOOPS ASSOCIATED WITH THE SAME SIGNAL PHASE SHALL BE INSTALLED IN THE SAME SAWCUT.

5 FOR CROSSWALK AND STOPLINE LAYOUT SEE STD DWG 721.

6 FOR LOOP INSTALLATION SPECIFICATIONS SEE STD DWG 806A & 806B.

7 HOME RUNS WILL CROSS ADJACENT LANES AT RIGHT ANGLE TO DIRECTION OF TRAVEL SO AS TO NOT CONFLICT WITH FUTURE LOOP INSTALLATION IN THE ADJACENT LANES.

8 6"x6" WHITE STAMARK TAPE LOCATED AT THE CENTER OF THE LOOP, ORIENTED AS A DIAMOND IN THE LANE TO BE INSTALLED BY CITY FORCES OR STRIPING CONTRACTOR.

EVERETT **CITY OF EVERETT PUBLIC WORKS DEPARTMENT**	TYPICAL TYPE 3 STOP LINE DETECTION LAYOUT	10-17-2000 Date: 802A COE Std Dwg:

T:\ACad\eps-coe design & constr specs for development\CURRENT\std detail dwgs\Dwg Files\STD802A.dwg, 2/21/2014 4:21:10 PM
T:\ACad\EPS-COE Design & Constr Specs for Development\CURRENT\STD DETAIL DWGS\Dwg Files\STD802A.dwg <802A> NOV 06 2007 13:52:58

NOTES

1. CABINET MATERIALS AND FABRICATION PER WSDOT/APWA STANDARD SPECIFICATIONS 9-29.5.
2. PLACEMENT OF TERMINAL STRIPS PER THIS DRAWING.
3. PLACEMENT OF WIRE TERMINATION LABELS SHALL BE PER PLAN.

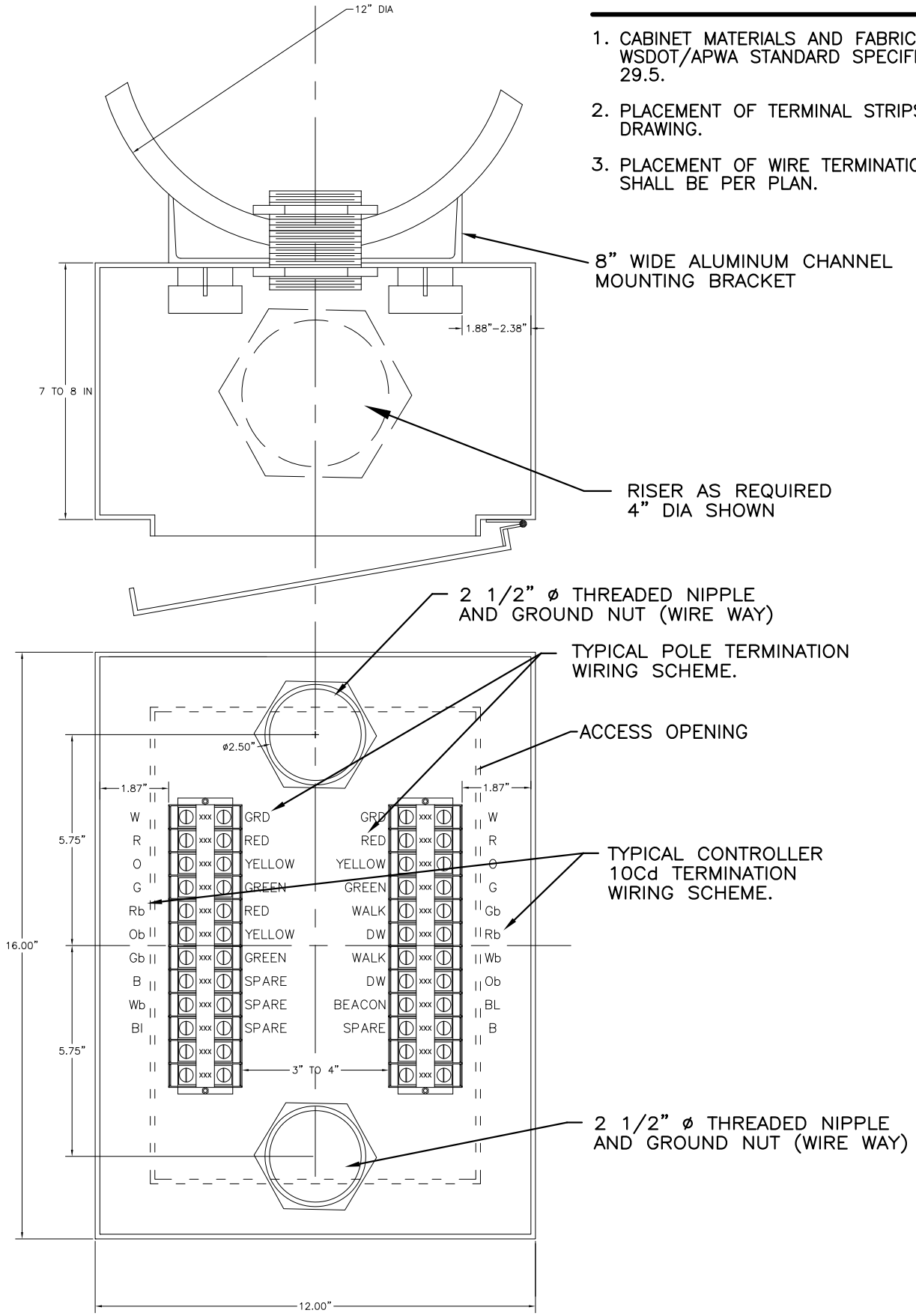

CITY OF EVERETT
PUBLIC WORKS DEPARTMENT

POLE MOUNTED TERMINAL CABINET

7-6-2007
Date:

803
COE Std Dwg:

T:\ACad\eps-coe design & constr specs for development\CURRENT\std detail dwgs\Dwg Files\STD803.dwg, 2/21/2014 4:22:08 PM

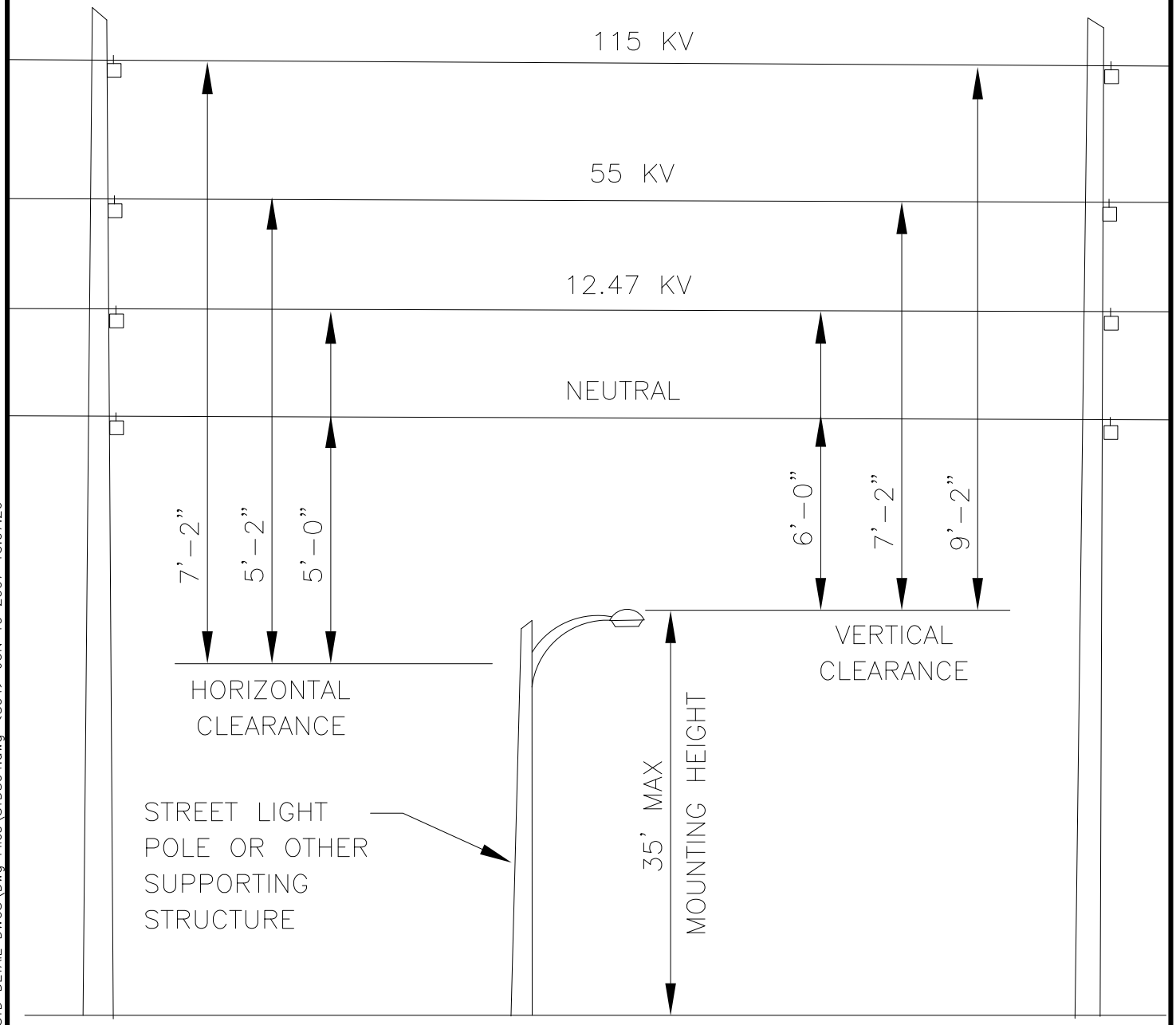

NOTES:

1. FOR ADDITIONAL INFORMATION ON MIN CLEARANCES REFER TO PUD NO 1 CONSTRUCTION STANDARDS SECTION 4.
2. ALL FINAL INSTALLATION CLEARANCES FROM EXISTING UTILITIES MUST BE APPROVED BY THE AFFECTED UTILITY.

CITY OF EVERETT **PUBLIC WORKS DEPARTMENT**	LUMINAIRE MOUNTING HEIGHT AND UTILITY CLEARANCES	9-21-1991 Date: 804 COE Std Dwg:

T:\ACad\eps-coe design & constr specs for development\CURRENT\std detail dwgs\Dwg Files\STD804.dwg, 2/21/2014 4:22:54 PM
T:\ACad\EPS-COE Design & Constr Specs for Development\CURRENT\STD DETAIL DWGS\Dwg Files\STD804.dwg <804> JUN 19 2007 15:07:26

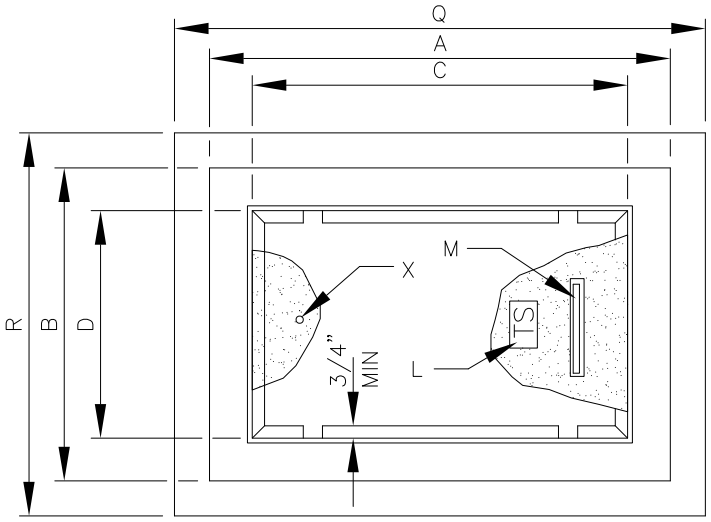

PLAN

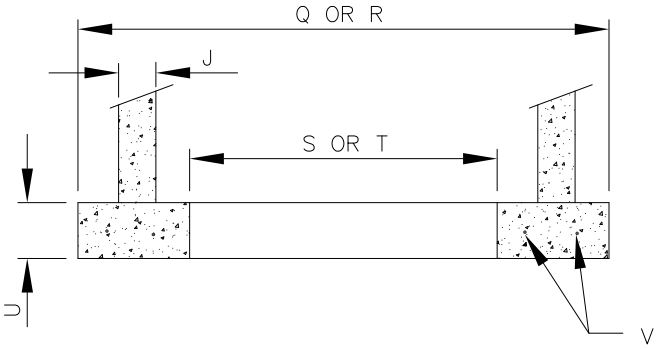

BASE SECTION

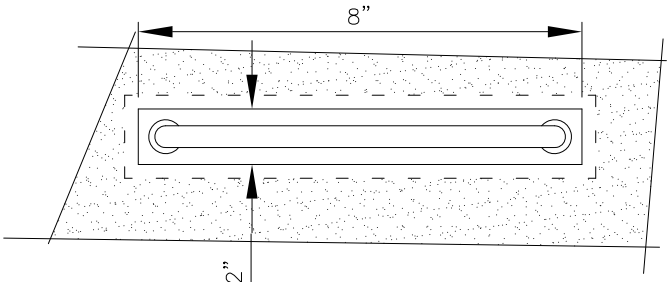

PLAN

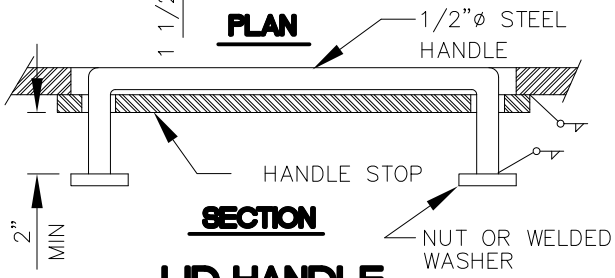

SECTION

LID HANDLE

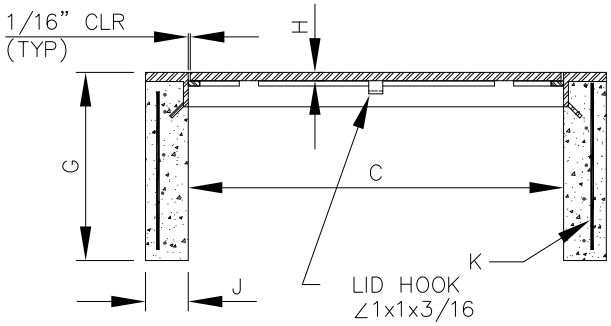

BOX SECTION

DIM.	ITEM	BOX TYPE		
		TYPE 1	TYPE 2	TYPE 8
A	BOX OUTSIDE LENGTH	22"	33"	42"
B	BOX OUTSIDE WIDTH	17"	22 1/2"	30"
C	BOX INSIDE LENGTH	18"	28"	36"
D	BOX INSIDE WIDTH	13"	17"	24"
E	LID LENGTH	17 7/8"	26 3/8"	37 7/8"
F	LID WIDTH	12 7/8"	16 7/8"	25 7/8"
G	BOX DEPTH	12"	12"	12"
H	LID THICKNESS	5/16"	5/16"	1/2"
J	WALL THICKNESS	1 1/2"	1 1/2"	3"
K	BOX OR EXTEN WALL WIRE REINF	W-3	W-2.5	W-5
L	LEGEND	1"x1" LTRS	1"x1" LTRS	1"x1" LTRS
M	HANDLE	N/A	N/A	ONE
Q	FOUNDATION OUTSIDE LENGTH	24-1/2"	35-1/2"	48"
R	FOUNDATION OUTSIDE WIDTH	19-1/2"	25"	36"
S	FOUNDATION INSIDE LENGTH	16-1/2"	27-1/2"	36"
T	FOUNDATION INSIDE WIDTH	11-1/2"	17-1/2"	20"
U	FOUNDATION DEPTH	3"	3"	3"
V	FOUNDATION REINF.	N/A	N/A	2-W-5
W	BOX EXTENSION DEPTH	N/A	N/A	12"
X	FINGER HOLE #/DIA	2 @ 5/16"	2 @ 5/8"	1 @ 5/8"
	CAPACITY CONDUIT INCH ø'S	6	12	24

ITEM	MATERIAL
BOX	6000 PSI CONC
FRAME	FLAT OR DIA-MOND GALV STEEL A786
LID SUPPORT	1/8"MIN GALV STEEL C,L OR T, -A36
LID	NON-SKID PLATE STEEL (GALV)
ANCHORS	STEEL WIRE OR TEE PLATE
REINF	ASTM A-82 STEEL
HANDLE	GALV STEEL
FOUNDATION	3000 PSI CONC

FOR ADDITIONAL INFORMATION SEE STD DWG 805B

CITY OF EVERETT
PUBLIC WORKS DEPARTMENT

TRAFFIC JUNCTION BOX DETAILS

4-2-2012
Date:

805
COE Std Dwg:

T:\ACad\EPS-COE Design & Constr Specs for Development\CURRENT\STD DETAIL DWGS\Dwg Files\STD805.dwg, 1, 2/26/2014 11:05:07 AM

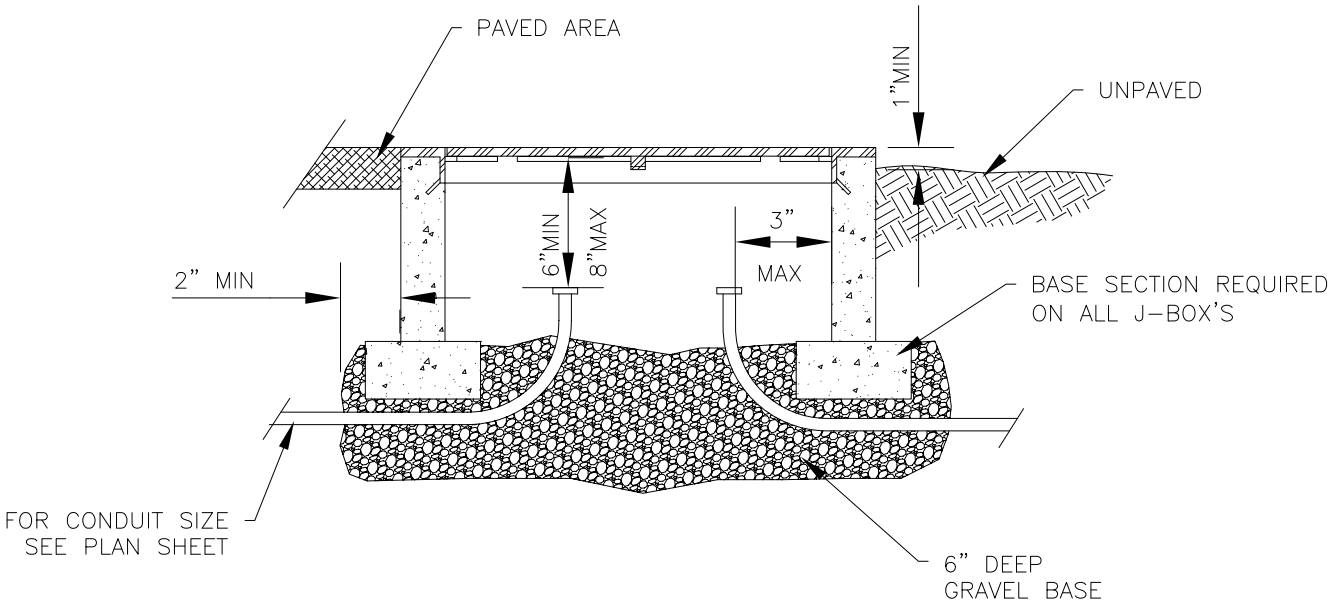

TYP J-BOX INSTALLATION

NOTES:

1. ALL DIMENSIONS ARE MINIMUM. EXACT CONFIGURATIONS VARY AMONG DIFFERENT MANUFACTURERS.
2. THE NOTED LID THICKNESSES ARE OVERALL MINIMUMS. NON-SKID LID SHALL BE HOT DIP GALVANIZED IN ACCORDANCE W/ ASTM A 123. AN APPROVED SURFACE PLATE IS STEEL "SLIPNOT GRADE 3 - COARSE" BY "W.S. MOLNAR CO".
3. LID SUPPORT MEMBERS SHALL BE WELDED TO FRAME.
4. 4000 PSI CONCRETE IS ALLOWED IF BOX REINFORCEMENT CONSISTS OF 6x6 - W3xW3 WELDED WIRE FABRIC WELDED TO THE FRAME.
5. WHEN NOTED IN THE CONTRACT TYPE 2 AND TYPE 7 BOXES SHALL BE PROVIDED WITH 12" DEEP EXTENSION BOXES.
6. WHEN NOTED IN THE CONTRACT TYPE 2 BOXES SHALL BE PROVIDED WITH A 10"x27 1/2" 10 GAGE DIVIDER PLATE COMPLETE WITH FASTENERS.
7. NON CONCRETE BOXES MAY BE SUBMITTED FOR APPROVAL EVALUATION WILL INCLUDE AN H-20 LOAD TEST.
8. ALL BOXES WILL BE WSDOT APPROVED AND CERTIFIED.
9. LEGEND FOR TRAFFIC SIGNAL SYSTEM BOXES WILL BE "TS", AND "LT" FOR ILLUMINATION SYSTEMS. LEGEND LETTERS WILL BE FORMED WITH 1/8" WELD BEAD.
10. FOR ADDITIONAL INFORMATION SEE STD DWG 805A.

CITY OF EVERETT PUBLIC WORKS DEPARTMENT	TRAFFIC JUNCTION BOX DETAILS	4-2-2012 Date: 805B COE Std Dwg:

T:\ACad\eps-coe design & constr specs for development\CURRENT\std detail dwgs\Dwg Files\STD805B.dwg, 2/21/2014 4:24:23 PM

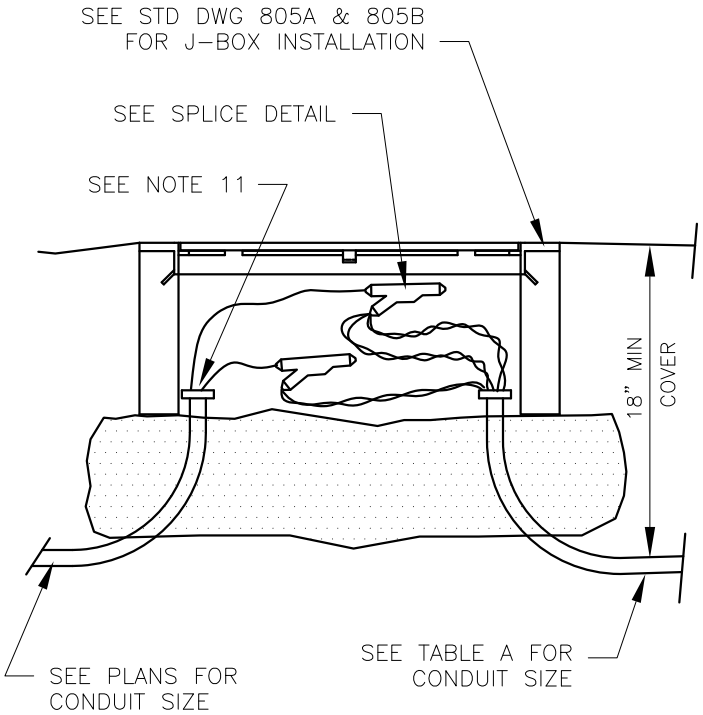

JUNCTION BOX

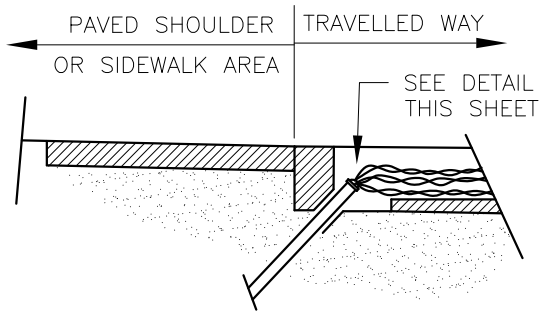

PAVED SHOLDER

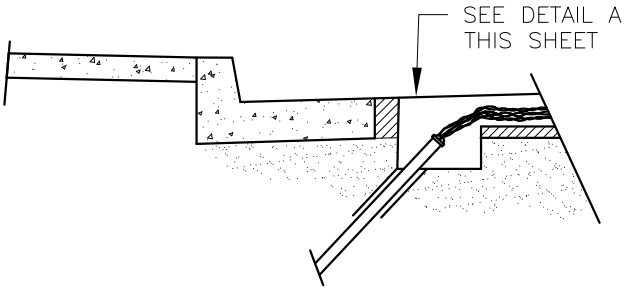

GURB & GUTTER

TYP COND PLACEMENT FOR LOOP LEAD-IN WIRES

LOOP LEAD PAIRS	1-2	3	4-5	6-8	9-12
CONDUIT SIZE (MIN)	1"	1 1/4"	1 1/2"	2"	2 1/2"
TRENCH WIDTH (MIN)	3"	3 1/4"	3 1/2"	4"	4 1/2"

TABLE A

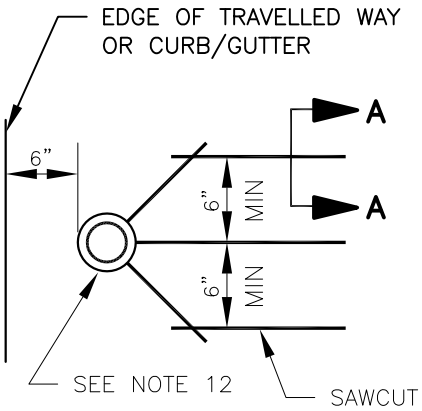

DETAIL A

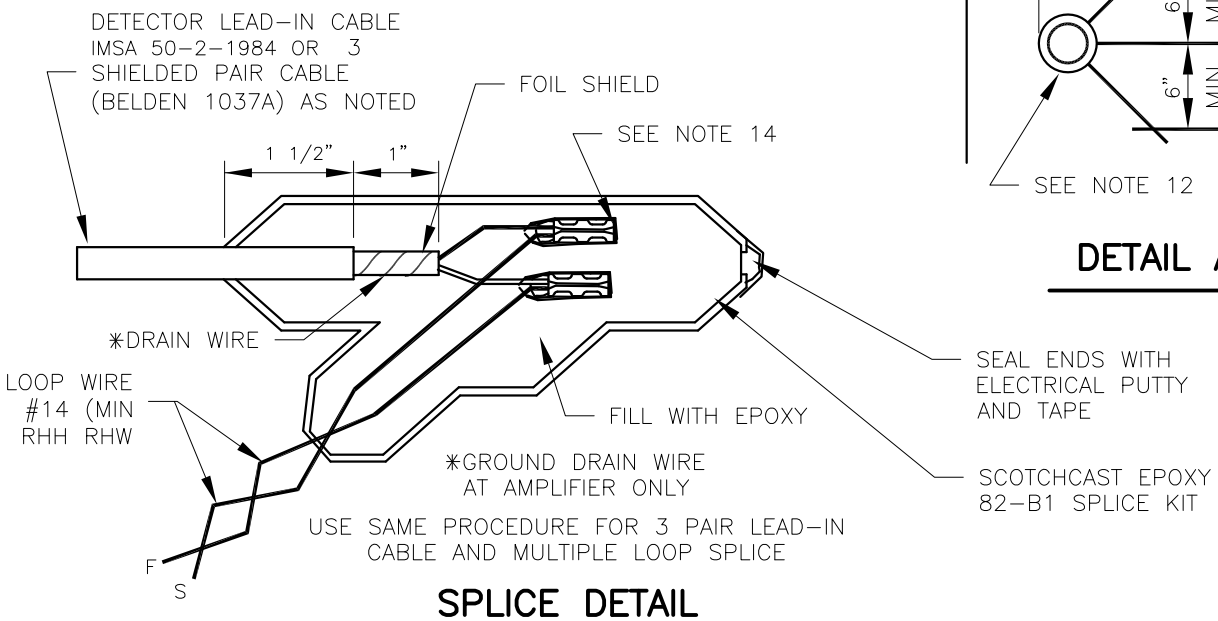

SPLICE DETAIL

CITY OF EVERETT PUBLIC WORKS DEPARTMENT	TRAFFIC INDUCTION LOOP DETAILS (SHEET 1 OF 3)	10-20-2008 Date: 806 COE Std Dwg:

T:\ACad\eps-coe design & constr specs for development\CURRENT\std detail dwgs\Dwg Files\STD806.dwg, 2/21/2014 4:25:15 PM

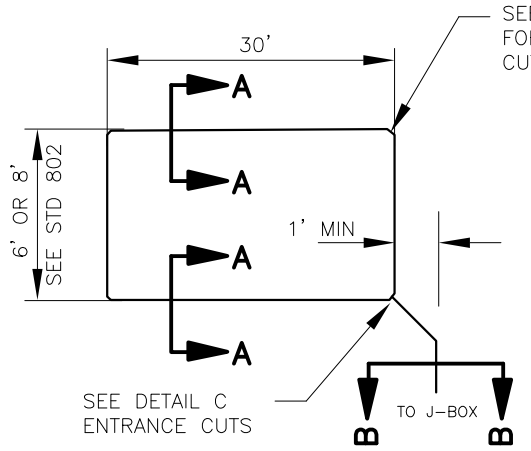

TYPE 1

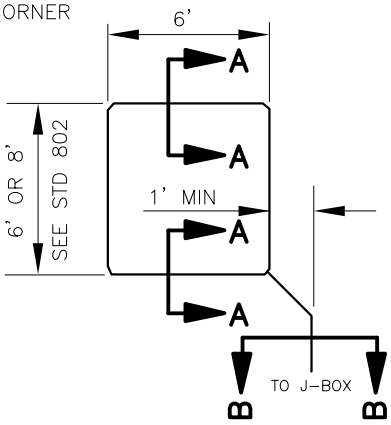

TYPE 2

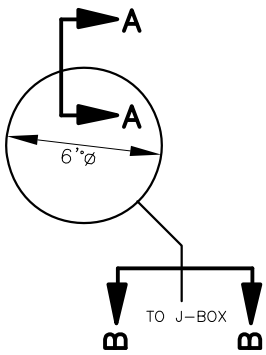

TYPE 3

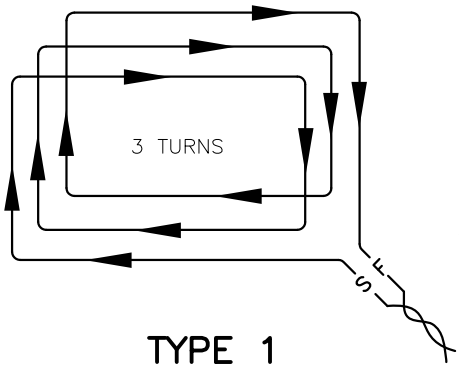

TYPE 1

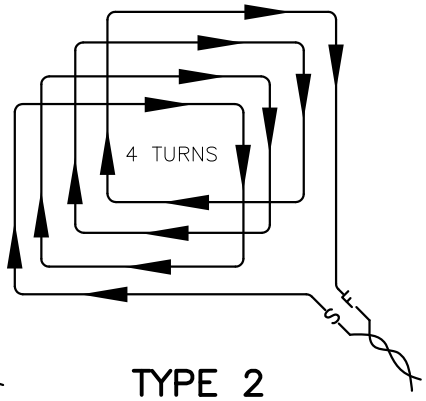

TYPE 2

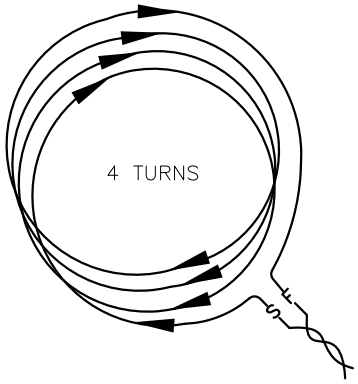

TYPE 3

LOOP WINDING DETAILS

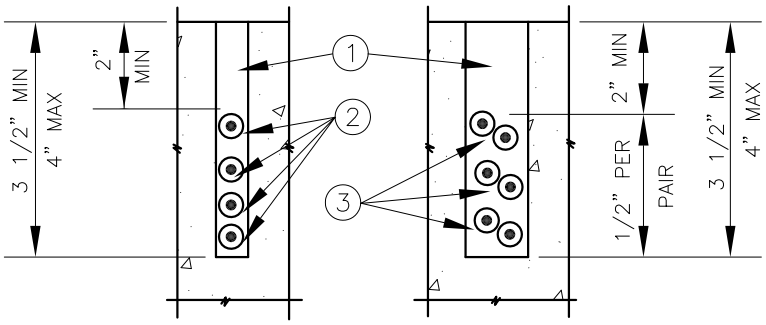

SECTION A–A

SECTION B–B

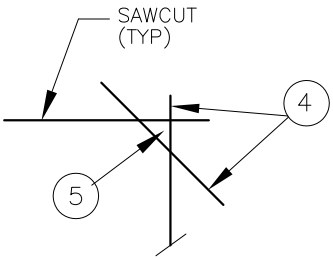

DETAIL B

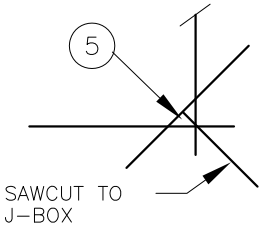

DETAIL C

CITY OF EVERETT PUBLIC WORKS DEPARTMENT	TRAFFIC INDUCTION LOOP DETAILS (SHEET 2 OF 3)	10-20-2008 Date: 806 COE Std Dwg:

T:\ACad\eps-coe design & constr specs for development\CURRENT\std detail dwgs\Dwg Files\STD806.dwg, 2/21/2014 4:25:40 PM

INSTALLATION NOTES:

1. SEALANT – CRAFCO PART NO 34271, OR APPROVED EQUAL.
2. LOOP WIRE – NUMBER VARIES SEE LOOP WINDING DETAILS BELOW.
3. LEAD–IN WIRES: ONE PAIR FOR EACH LOOP SERVED, 3 PAIR MAX PER SAWCUT SEE INSTALLATION NOTES.
4. EXTEND SAWCUT SUFFICIENT LENGTH TO PROVIDE FULL SAWCUT DEPTH AROUND CORNERS.
5. LOCATE CORNER SAWCUT AT 45° TO SIDE CUTS TO PREVENT KINK IN LOOP WIRE AND ALSO MINIMIZE VOID. TRIANGULAR VOID WILL BE REMOVED AND FILLED WITH SEALANT.

GENERAL NOTES FOR LOOP INSTALLATION:

1. INSTALL JUNCTION BOX AND LEAD–IN CONDUIT.
2. SAW LOOP SLOTS AND LEAD–IN SLOTS.
3. LAY OUT LOOP WIRE BEGINNING AT JUNCTION BOX, ALLOWING 5' MINIMUM SLACK.
4. INSTALL WIRE IN LOOP SLOT. SEE LOOP WINDING DETAIL.
5. RETURN TO JUNCTION BOX AND IDENTIFY LEADS WITH PLAN DETECTOR NUMBER AND "S" FOR START AND "F" FOR FINISH.
6. TWIST EACH PAIR OF LEAD–IN WIRES TWO TURNS PER FOOT FROM LOOP TO JUNCTION BOX AND INSTALL IN LEAD–IN SLOT AND CONDUIT. REVERSE DIRECTION OF TWIST FOR EACH SUCCESSIVE PAIR INSTALLED.
7. CONSTRUCT SUPPLEMENTAL SPLICE CONTAINING ANY SERIES OR PARALLEL LOOP CONNECTIONS REQUIRED IN PLANS. SUPPLEMENTAL SPLICES ARE SUBJECT TO THE SAME REQUIREMENTS SHOWN FOR THE LOOP LEAD AND SHIELDED CABLE SPLICE. IF APPROVED BY ENGINEER SCOTCHLOK 3570 EPOXY KIT SEALING PACKS MAY BE SUBSTITUTED FOR THE SCOTCHCAST 82–B1 FOR SUPPLEMENTAL SPLICES.
8. SPLICE LOOP LEADS OR SUPPLEMENTAL SPLICE LEADS TO SHIELDED CABLE AS NOTED.
9. COMPLETE INSTALLATION AND TEST LOOP CIRCUITS OR COMBINATION LOOP CIRCUITS. SEE WSDOT STD SPEC 8–20.3(14)D.
10. FOR LOOP LOCATION REFER TO STD DWG 802 AND PLANS.
11. SEAL ENDS OF CONDUIT WITH ELECTRICAL PUTTY OR SILICONE.
12. DRILL HOLE FOR HOME–RUN CONDUIT 1" LARGER THAN CONDUIT AND FILL VOID WITH HOT MIX ASPHALT.
13. ALL SPLICES SHALL BE ABLE TO BE RAISED A MINIMUM OF 16" ABOVE GROUND LINE.
14. BUCHANAN 2006S SPLICE CAPS, CRIMP WITH BUCHANAN C–24 CRIMPER FOLLOWING MANUFACTURER'S INSTALLATION PROCEDURE. SOLDER CRIMP (NO OPEN FLAME TORCH OR SIMILAR IS ALLOWED) AND TAPE WITH 2 LAYERS OF TAPE.

EVERETT **CITY OF EVERETT** **PUBLIC WORKS DEPARTMENT**	TRAFFIC INDUCTION LOOP DETAILS (SHEET 3 OF 3)	10-20-2008 Date: 806 COE Std Dwg:

T:\ACad\eps-coe design & constr specs for development\CURRENT\std detail dwgs\Dwg Files\STD806.dwg, 2/21/2014 4:26:02 PM

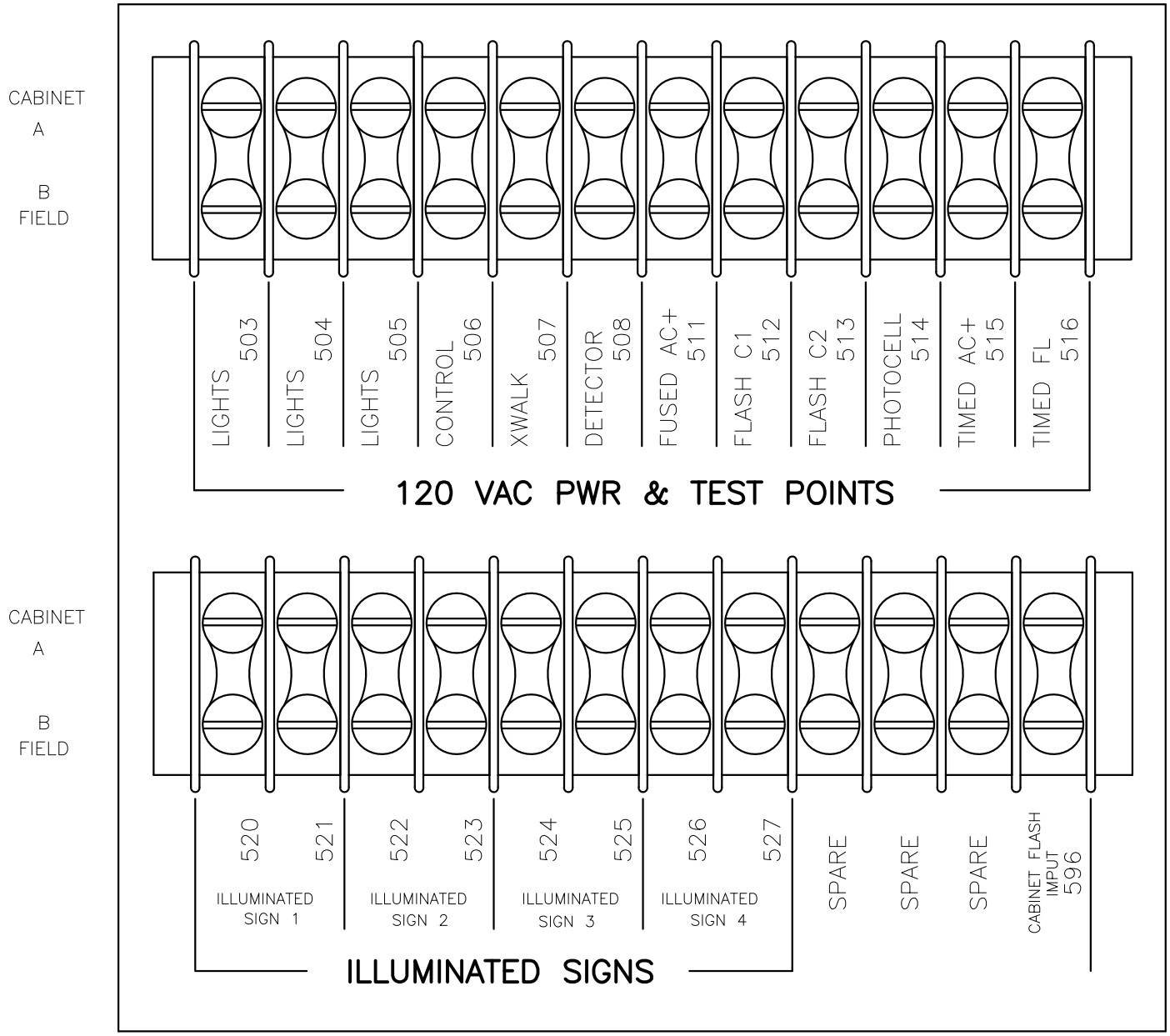

CITY OF EVERETT
PUBLIC WORKS DEPARTMENT

AC POWER PANEL DETAIL

9-21-1991
Date:

807
COE Std Dwg:

T:\ACad\eps-coe design & constr specs for development\CURRENT\std detail dwgs\Dwg Files\STD807.dwg, 2/21/2014 4:26:51 PM

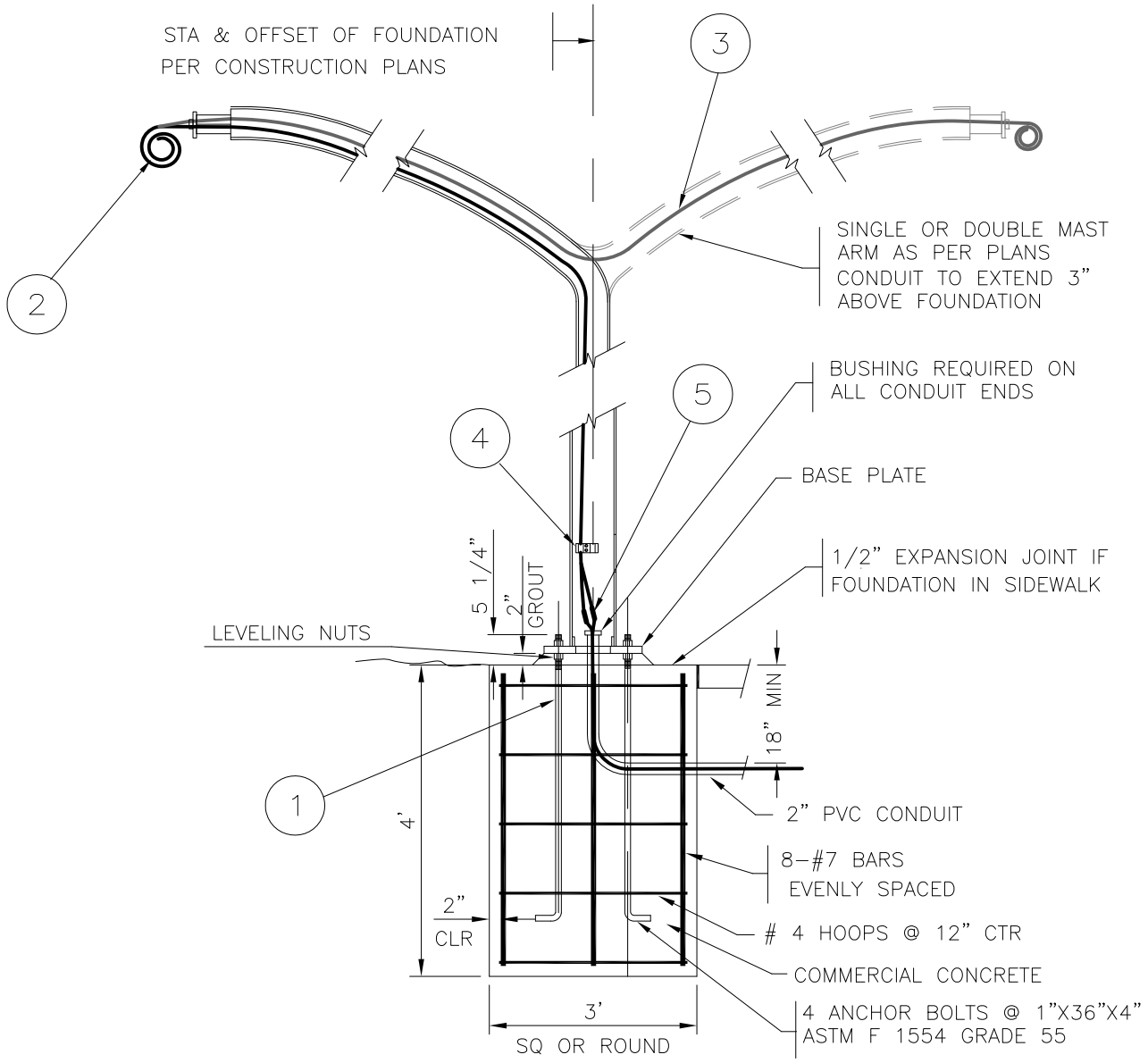

FOUNDATION SECTION

BASE PLATE PER POLE FABRICATOR'S DRAWINGS:

FOR ALUMINUM POLES, BOLT CIRCLE IS 11 $\frac{1}{2}$" +/- .5".

FOR STEEL POLES, BOLT CIRCLE IS DEPENDENT ON TYPE AND HEIGHT OF POLE.

NOTES:

1. THE TOP 12" OF ANCHOR BOLTS SHALL BE GALVANIZED.
2. INSTALL 2" x 1" REDUCING WASHER AND 1" CONNECTOR TO SECURE CONDUCTORS, AND COIL 30" OF CABLE FOR FUTURE CONNECTION AT END OF MAST ARM.
3. FOR DOUBLE MAST ARM INSTALL 2ND CABLE BETWEEN LUMINAIRES WHEN BOTH LUMINAIRES ARE ON SAME CIRCUIT.
4. CONDUCTOR ATTACHMENT BRACKET PER WSDOT/APWA STD PLAN J-1E.
5. PLACE POLE AND BRACKET CABLE IN CONDUCTOR ATTACHMENT BRACKET. STRIP OUTER CABLE SHEATH BELOW BRACKET AND CONNECT TO FEED CABLE WITH QUICK DISCONNECTS PER WSDOT/APWA STD SPEC 9-29.7

CITY OF EVERETT **PUBLIC WORKS DEPARTMENT**	STREET LIGHT FOUNDATION SHEET 1 OF 2	10-22-2009 Date: 809A COE Std Dwg:

T:\ACad\eps-coe design & constr specs for development\CURRENT\std detail dwgs\Dwg Files\STD809.dwg, 2/21/2014 4:27:56 PM

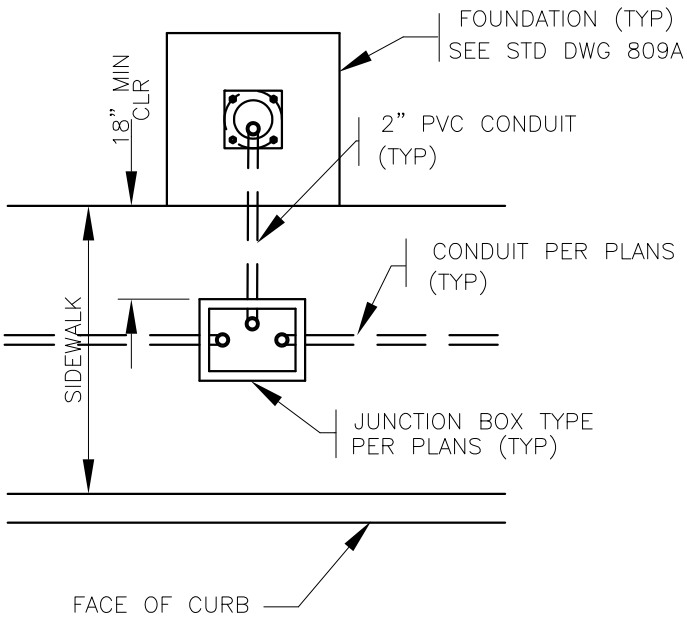

CONDITION 1

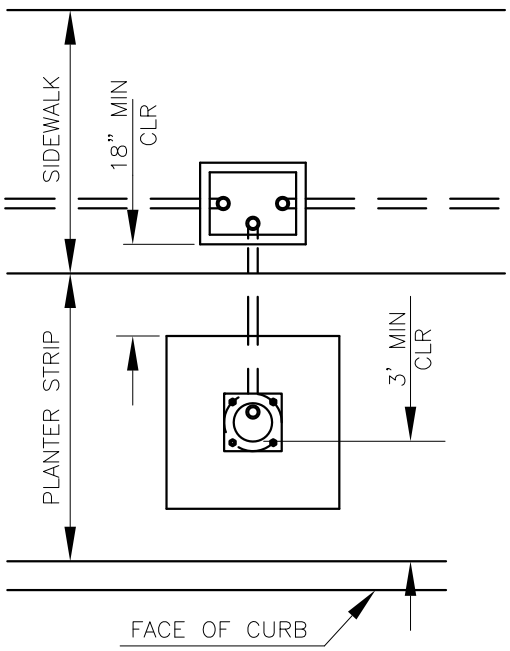

CONDITION 2

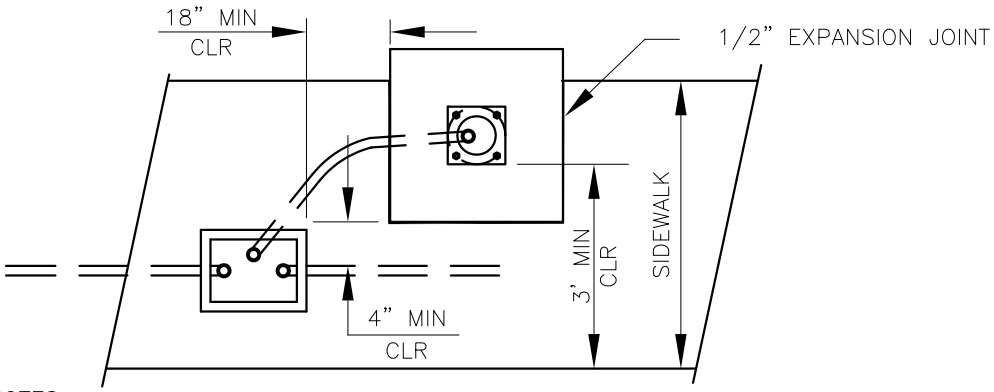

NOTES:

1. IF POLE FOUNDATION FALLS WITHIN SIDEWALK AREA, TOP OF FOUNDATION WILL BE FLUSH WITH FINISHED SIDEWALK AND BE FINISHED IN THE SAME MANNER AS SIDEWALK.
2. 1/2" EXPANSION JOINT WILL BE PLACED BETWEEN FOUNDATION AND SIDEWALK.

CONDITION 3

NOTES:

1 CONDITION 1 & 2 ARE NORMAL INSTALLATION OPTIONS DEPENDING ON STREET DESIGN.

2 CONDITION 3 INSTALLATION IS ALLOWED WITH APPROVAL OF CITY ENGINEER WHERE EXISTING R/W OR PHYSICAL CONDITIONS WARRANT THIS TYPE INSTALLATION.

CITY OF EVERETT **PUBLIC WORKS DEPARTMENT**	STREET LIGHT FOUNDATION SHEET 2 OF 2	10-22-2009 Date: 809A COE Std Dwg:

T:\ACad\eps-coe design & constr specs for development\CURRENT\std detail dwgs\Dwg Files\STD809.dwg, 2/21/2014 4:28:16 PM

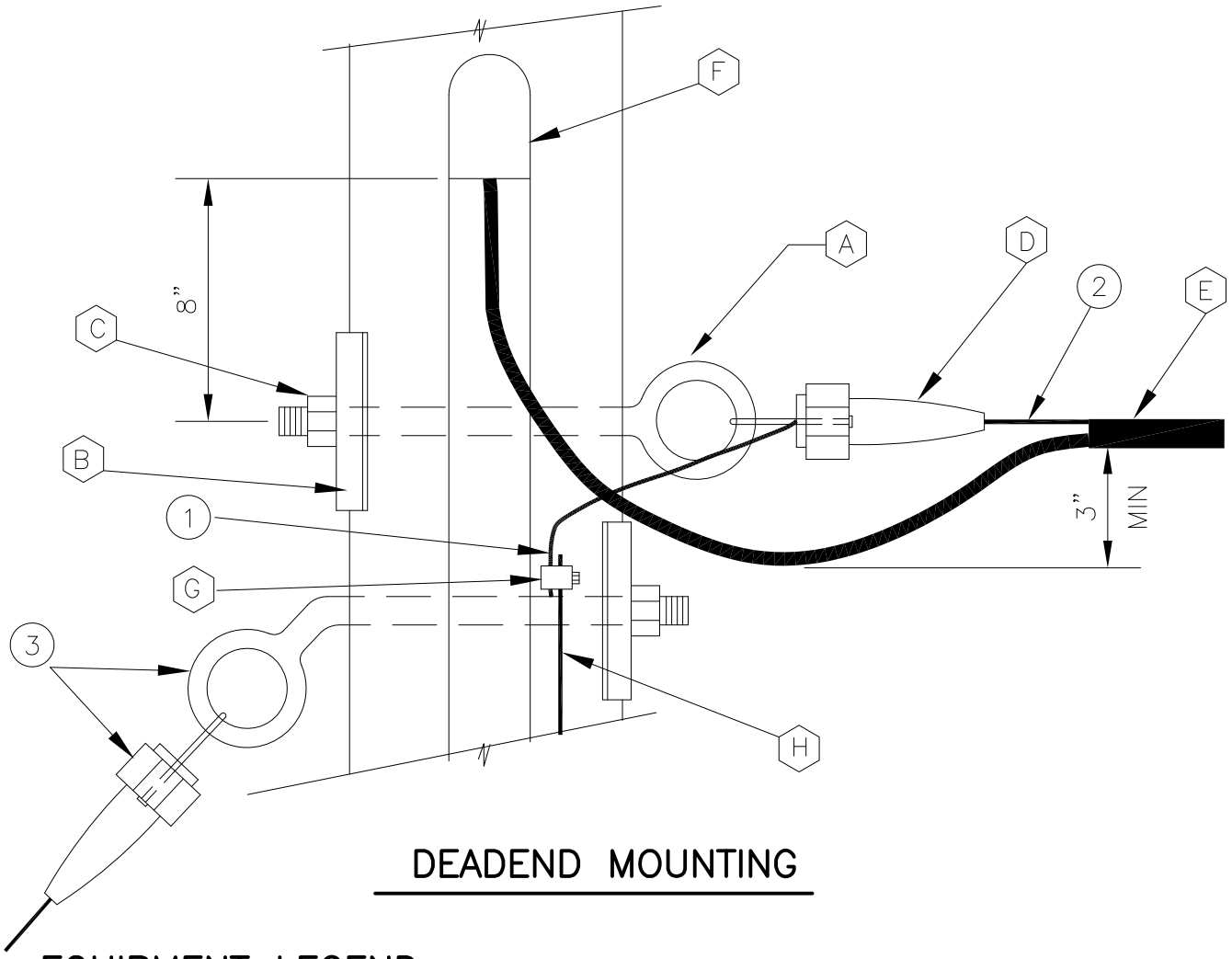

DEADEND MOUNTING

EQUIPMENT LEGEND

- (A) 5/8" STRAIGHT HOT-DIPPED GALVANIZED STEEL OVAL OR THIMBLEYE BOLT.
- (B) 3" SQ x 3/16" THICK CURVED GALVANIZED WASHER.
- (C) 5/8" GALVANIZED HEX NUT.
- (D) SHORT-BALE STRANDVISE SIZED TO MESSENGER CABLE (1/4" MIN).
- (E) FIGURE 8 CABLE, FOR SIZE AND TYPE SEE PLANS AND SPEC'S (MESSENGER 1/4" HS STEEL MIN).
- (F) RISER W/WEATHER HEAD PER CITY OF EVERETT STANDARD DWG 330.
- (G) BRASS CABLE CONNECTOR.
- (H) POLE GROUND TO 5/8"x8' COPPER PLATED GROUND ROD.

INSTALLATION NOTES

1. CONNECT MESSENGER CABLE TO POLE GROUND WIRE.
2. SPLIT MESSENGER CABLE AWAY FROM MAIN CABLE.
3. FOR DOWN GUY SEE WSDOT STANDARD PLAN J-7d.

CITY OF EVERETT PUBLIC WORKS DEPARTMENT	AERIAL TELEMETRY INSTALLATION ON WOOD POLE DEADEND MOUNTING	9-21-1991 Date: 810A COE Std Dwg:

T:\ACad\eps-coe design & constr specs for development\CURRENT\std detail dwgs\Dwg Files\STD810A.dwg, 2/21/2014 4:29:00 PM

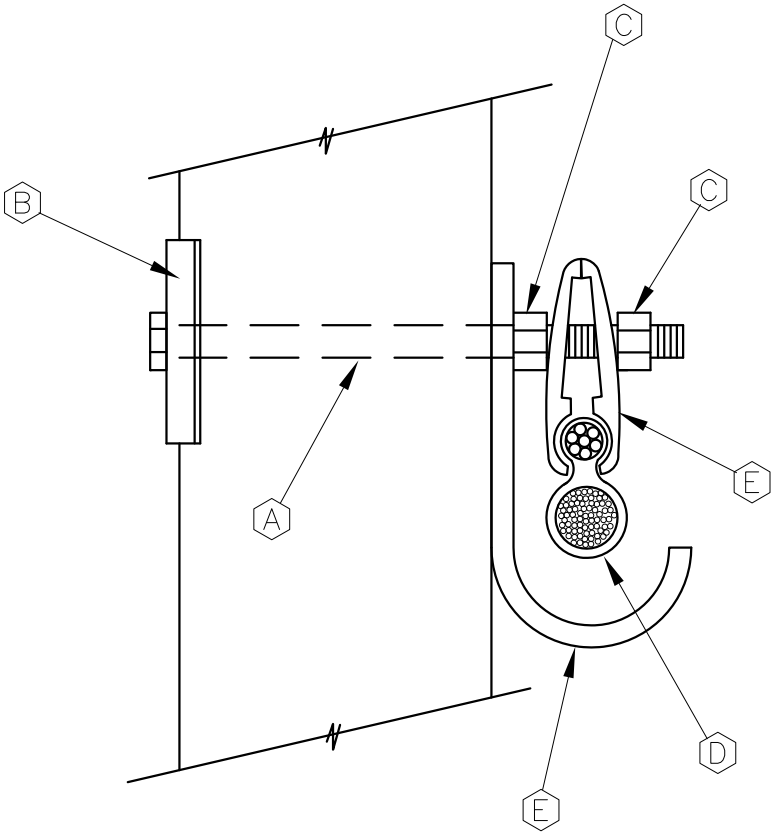

CABLE SUSPENSION CLAMP

EQUIPMENT LEGEND

(A) 5/8" STRAIGHT HOT-DIPPED GALVANIZED STEEL BOLT (LENGTH VARIES DUE TO POLE DIAMETER).

(B) 3" SQ x 3/16" THICK CURVED GALVANIZED WASHER.

(C) 5/8" GALVANIZED HEX NUT.

(D) FIGURE 8 CABLE. FOR SIZE AND TYPE SEE PLANS AND SPEC'S. (MESSENGER 1/4" HS STEEL MIN).

(E) J-HOOK & CABLE SUSPENSION CLAMP ASSEMBLY (TANGENTIAL SUPPORT W/ CLAMP FOR 5/8" BOLT).

INSTALLATION NOTES

(1) IF HORIZONTAL DEFLECTION IS GREATER THAN 2 DEGREES USE ANGLE POINT MOUNTING PER CITY OF EVERETT STANDARD DWG 810C.

EVERETT **CITY OF EVERETT** **PUBLIC WORKS DEPARTMENT**	AERIAL TELEMETRY INSTALLATION ON WOOD POLE CABLE SUSPENSION CLAMP	9-21-1991 Date: 810B COE Std Dwg:

T:\ACad\eps-coe design & constr specs for development\CURRENT\std detail dwgs\Dwg Files\STD810B.dwg, 2/21/2014 4:29:41 PM

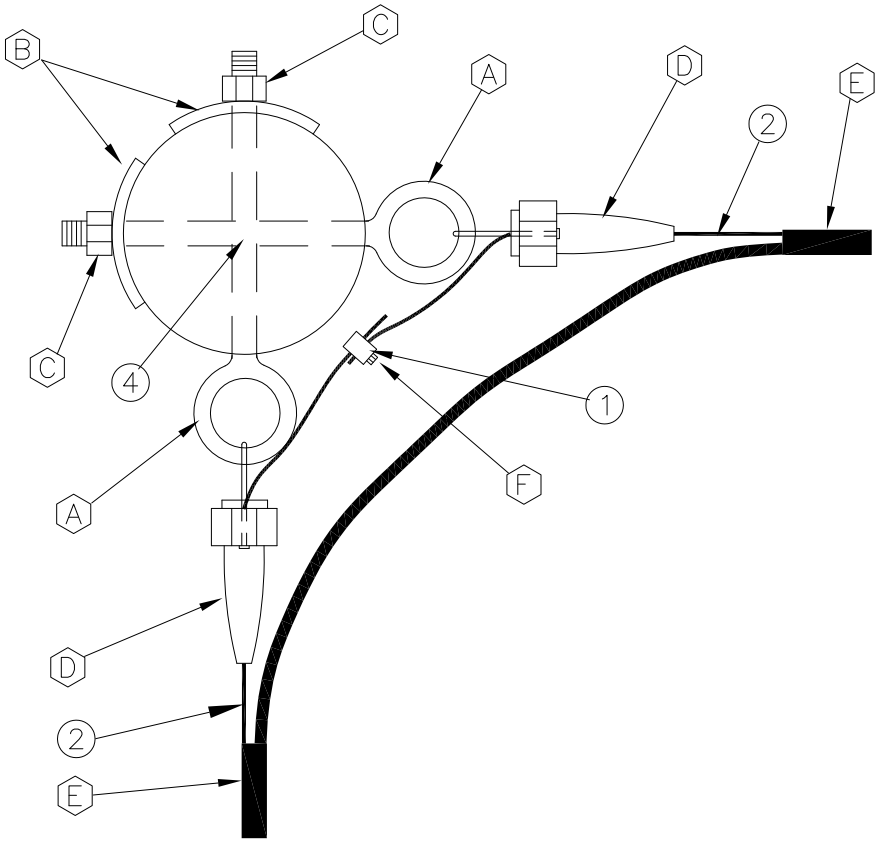

ANGLE POINT MOUNTING

EQUIPMENT LEGEND

- (A) 5/8" STRAIGHT HOT-DIPPED GALVANIZED STEEL OVAL OR THIMBLEYE BOLT.
- (B) 3" SQ x 3/16" THICK CURVED GALVANIZED WASHER.
- (C) 5/8" GALVANIZED HEX NUT.
- (D) SHORT-BALE STRANDVISE SIZED TO MESSENGER CABLE (1/4" MIN).
- (E) FIGURE 8 CABLE, FOR SIZE AND TYPE SEE PLANS AND SPEC'S (MESSENGER 1/4" HS STEEL MIN).
- (F) BRASS CABLE CONNECTOR.
- (G) POLE GROUND TO 5/8"x8' COPPER PLATED GROUND ROD.

INSTALLATION NOTES

1. CONNECT MESSENGER CABLES TOGETHER SUITABLE FOR GROUNDING WIRE.
2. SPLIT MESSENGER CABLE AWAY FROM MAIN CABLE.
3. FOR DOWN GUY SEE WSDOT STANDARD PLAN J-7d.
4. 3" MIN VERTICAL CLEARANCE BETWEEN CROSSING BOLTS.

EVERETT **CITY OF EVERETT** **PUBLIC WORKS DEPARTMENT**	AERIAL TELEMETRY INSTALLATION ON WOOD POLE ANGLE POINT MOUNTING	9-21-1991 Date: 810C COE Std Dwg:

T:\ACad\eps-coe design & constr specs for development\CURRENT\std detail dwgs\Dwg Files\STD810C.dwg, 2/21/2014 4:30:19 PM
T:\ACad\EPS-COE Design & Constr Specs for Development\CURRENT\STD DETAIL DWGS\Dwg Files\STD810C.dwg <810C> JUN 19 2007 14:22:32

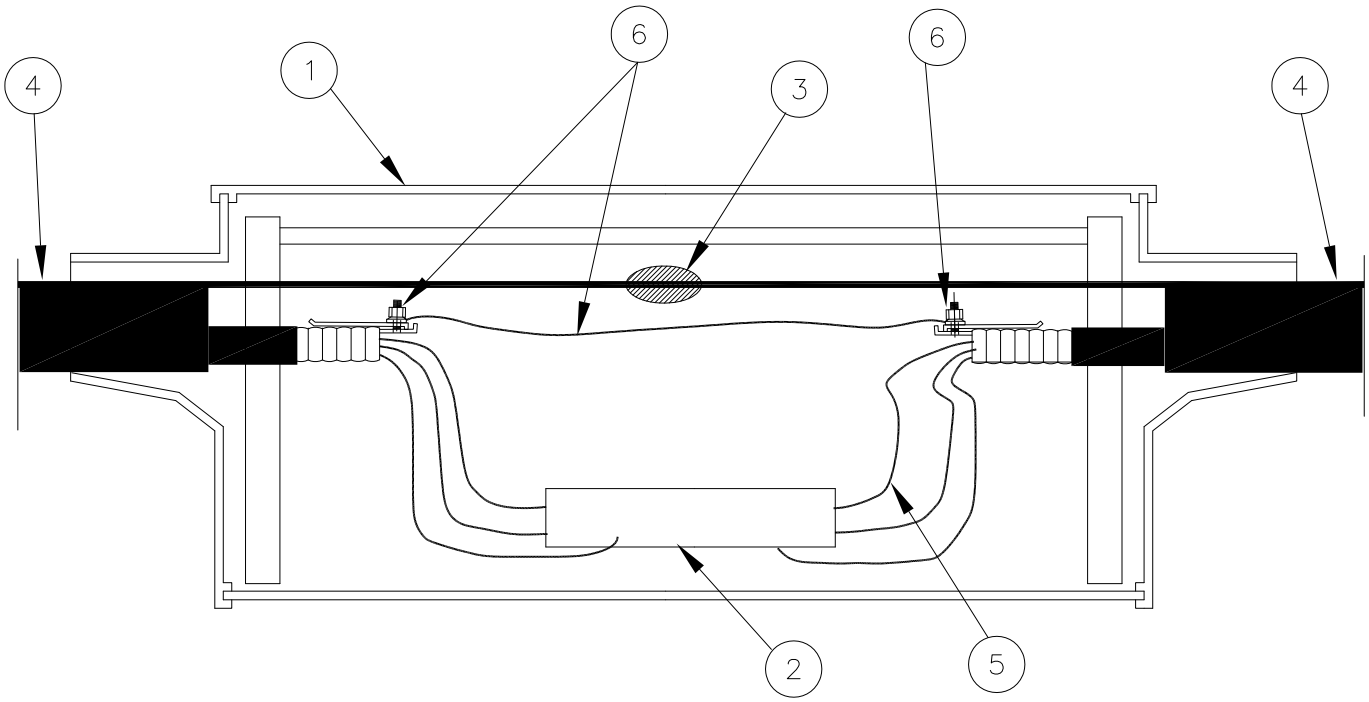

NOTES

1. SINGLE ACCESS CABLE CLOSURE FOR PLASTIC JACKETED TELEPHONE CABLE (RELIABLE ELECTRIC MODEL 100-MB OR EQUAL).
2. TERMINAL BLOCK SIZED AS REQUIRED.
3. MESSENGER CABLE SPLICE WITH STRAND LINK.
4. FIGURE 8 CABLE. SEE PLANS & SPEC'S FOR SIZE AND TYPE.
5. BARE ENDS OF TWISTED PAIRS MUST BE AT LEAST 24" LONG BEFORE TERMINATING.
6. SPLICE CABLE SHIELDING USING 2 CASEY CLIPS (COMMUNICATIONS TECHNOLOGY # C4029 OR EQUAL) AND 1 BONDING JUMPER WITH GREEN INSULATION (NO. 14 AWG STRANDED).

CITY OF EVERETT PUBLIC WORKS DEPARTMENT	AERIAL TELEMETRY JUNCTION BOX	9-21-1991 Date:
		811 COE Std Dwg:

T:\ACad\eps-coe design & constr specs for development\CURRENT\std detail dwgs\Dwg Files\STD811.dwg, 2/21/2014 4:31:02 PM

NOTES:

1. THE SIGNALS "ON–OFF" SWITCH SHALL BE AN "ON–OFF" SWITCH RATED AT 15 AMPS, 125 VOLTS AC.
2. THE RESET SWITCH SHALL BE A PUSH BUTTON SWITCH RATED AT 15 AMPS, 125 VOLTS AC.

POWER SUPPLY – FRONT VIEW

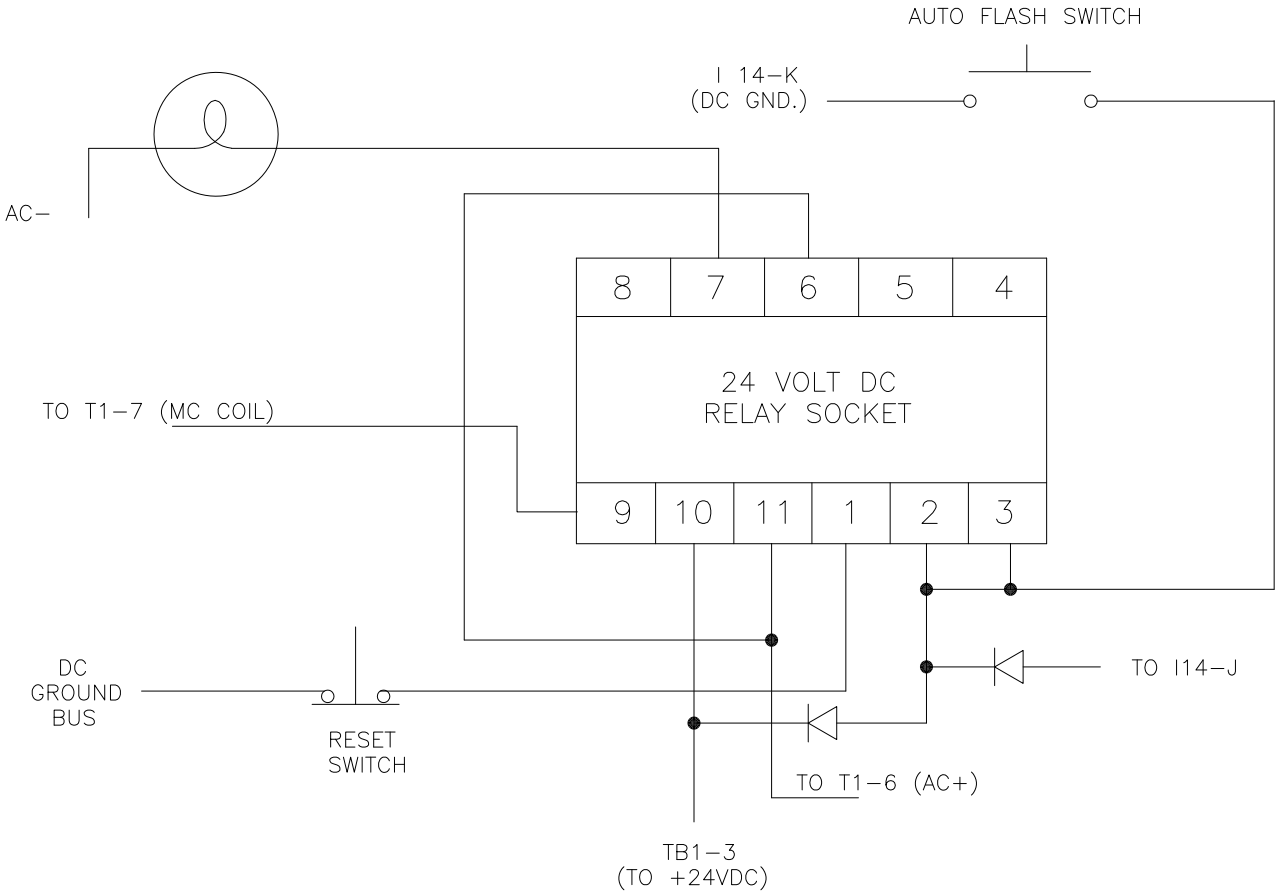

1. THE AUTO–FLASH SWITCH SHALL BE A PUSH BUTTON SWITCH RATED AT 15 AMPS, 125 VOLTS AC.
2. THE RESET SWITCH SHALL BE A PUSH BUTTON SWITCH RATED AT 15 AMPS, 125 VOLTS AC.

POLICE PANEL WIRING

CITY OF EVERETT PUBLIC WORKS DEPARTMENT	POLICE PANEL MODEL 332 CABINET	6–14–1995 Date:
		813 COE Std Dwg:

T:\ACad\eps-coe design & constr specs for development\CURRENT\std detail dwgs\Dwg Files\STD813.dwg, 2/21/2014 4:31:48 PM

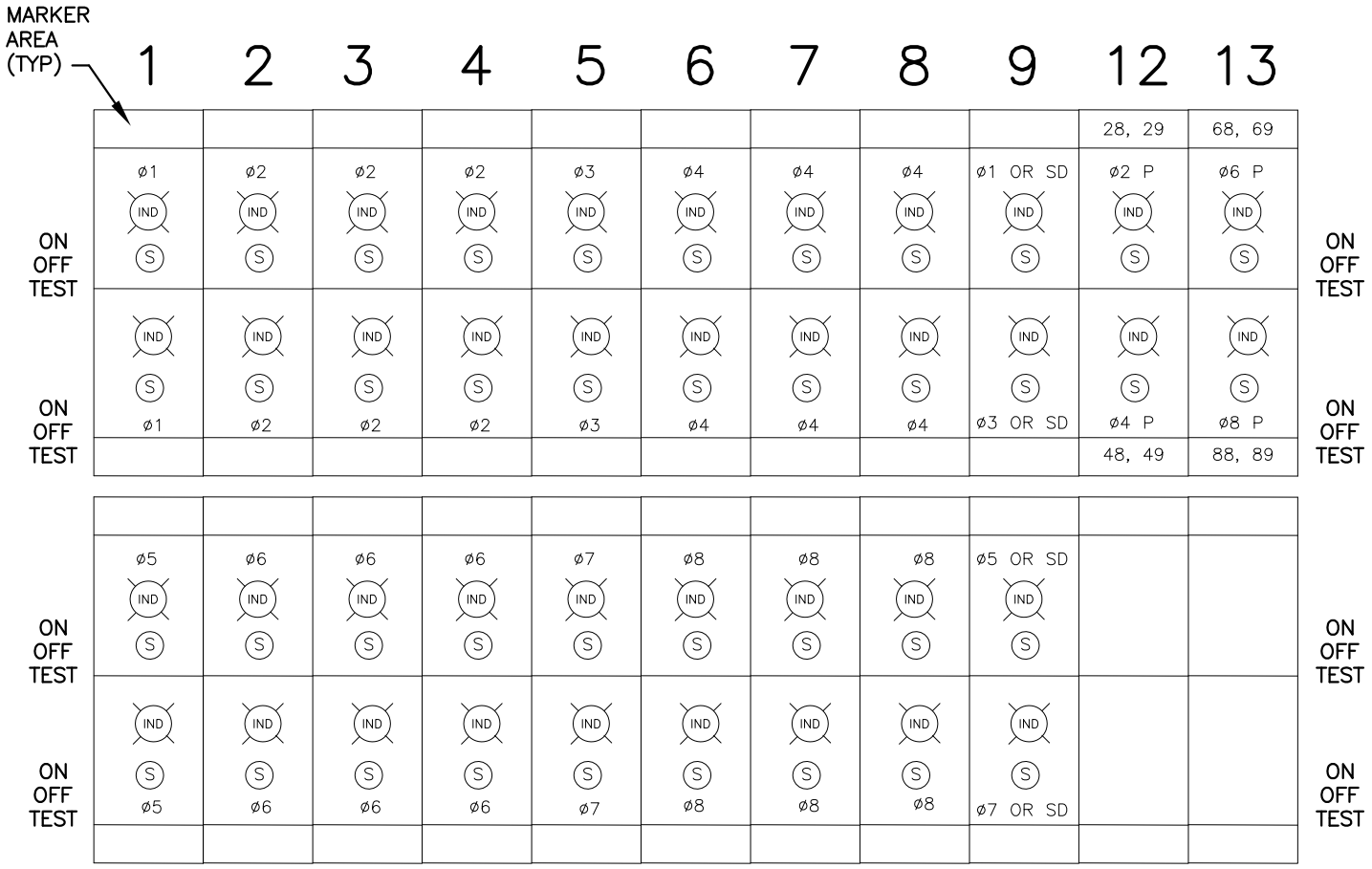

IND INDICATOR LIGHT

S PUSH BUTTON TEST SWITCH

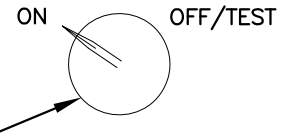

ROTARY WAFER SWITCH

DETECTION PANEL

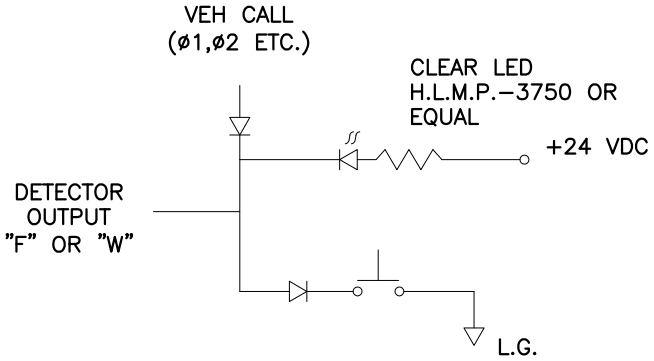

DETECTOR TEST SWITCH WIRING

CITY OF EVERETT PUBLIC WORKS DEPARTMENT	DETECTION PANEL MODEL 332 CABINET	2-12-1996 Date:	814 COE Std Dwg:

T:\ACad\eps-coe design & constr specs for development\CURRENT\std detail dwgs\Dwg Files\STD814.dwg, 2/21/2014 4:32:45 PM

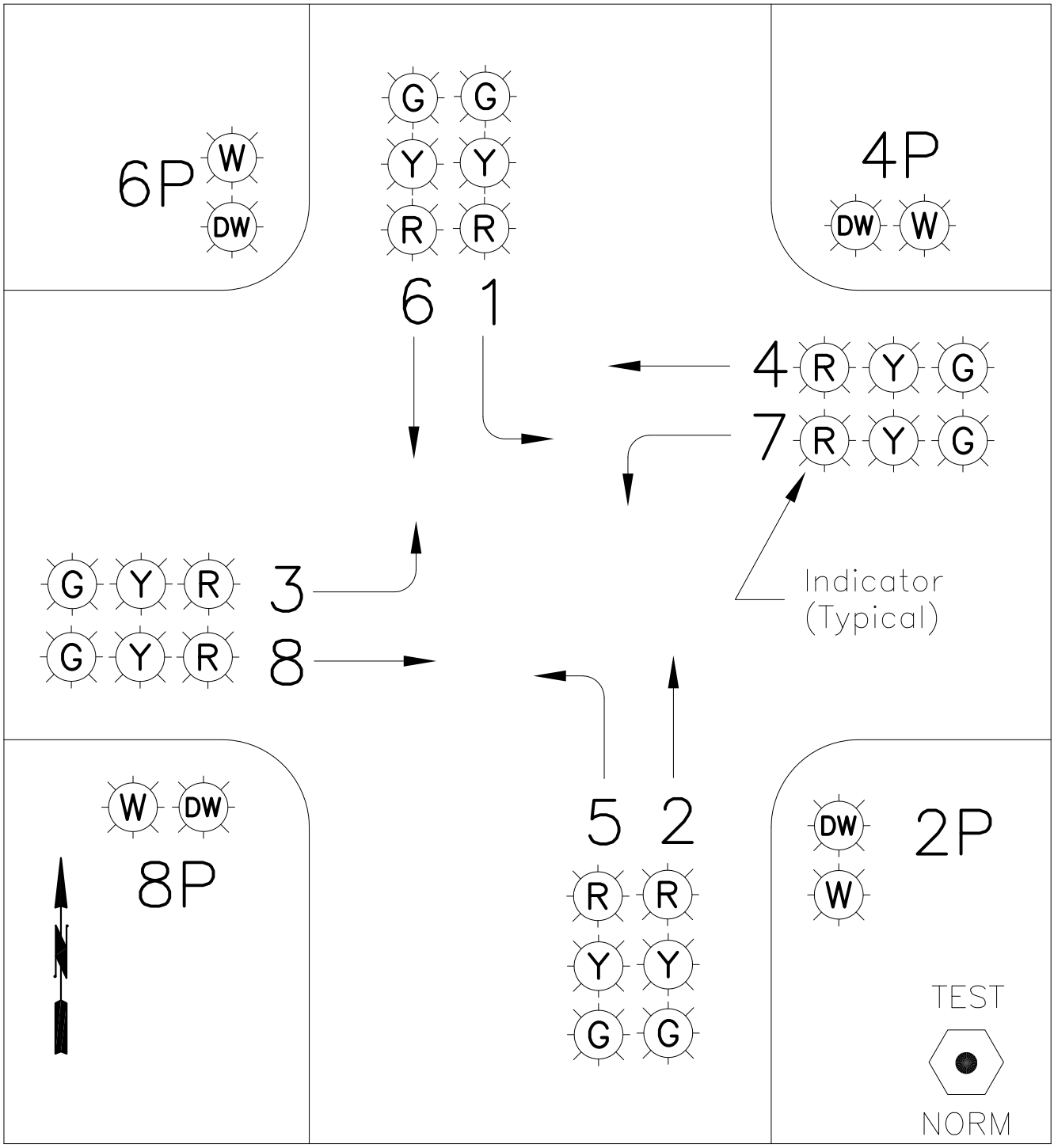

DISPLAY PANEL CONFIGURATION

CITY OF EVERETT PUBLIC WORKS DEPARTMENT	DISPLAY PANEL	3-4-1992 Date:
		815 COE Std Dwg:

T:\ACad\eps-coe design & constr specs for development\CURRENT\std detail dwgs\Dwg Files\STD815.dwg, 2/21/2014 4:33:34 PM

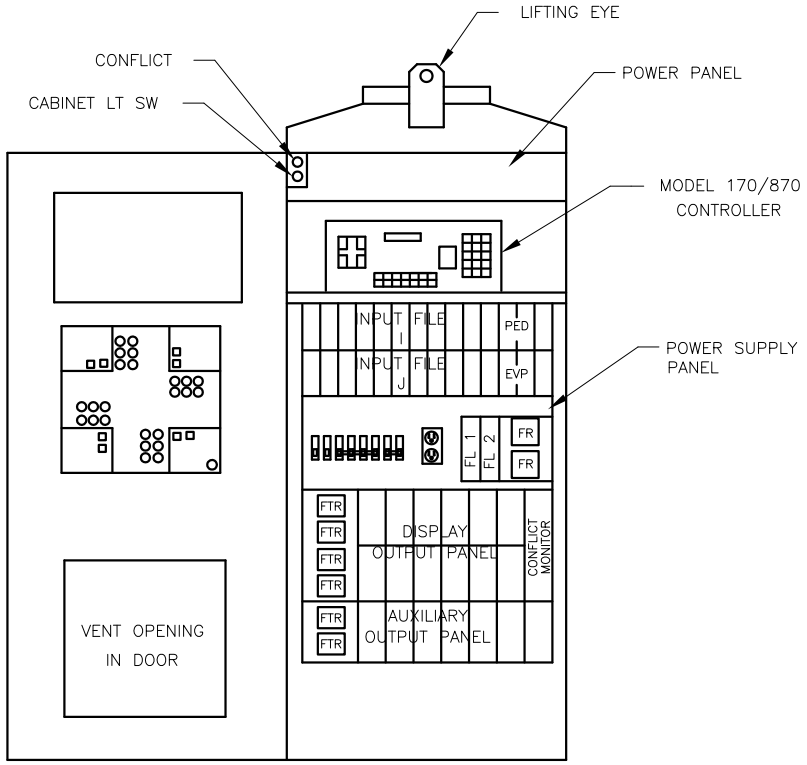

DOOR **FRONT**

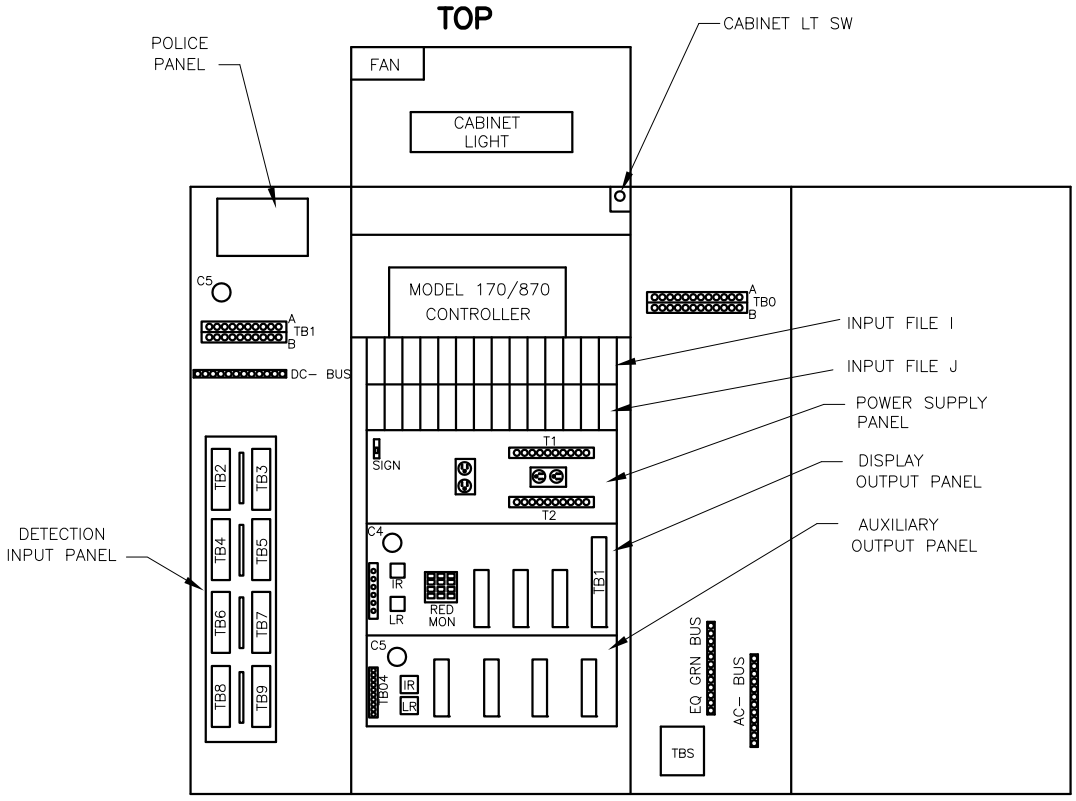

LEFT SIDE **REAR** **RIGHT SIDE** **DOOR**

CITY OF EVERETT
PUBLIC WORKS DEPARTMENT

332 CABINET LAYOUT

5-17-1994
Date:

816
COE Std Dwg:

T:\ACad\eps-coe design & constr specs for development\CURRENT\std detail dwgs\Dwg Files\STD816.dwg, 2/21/2014 4:34:15 PM

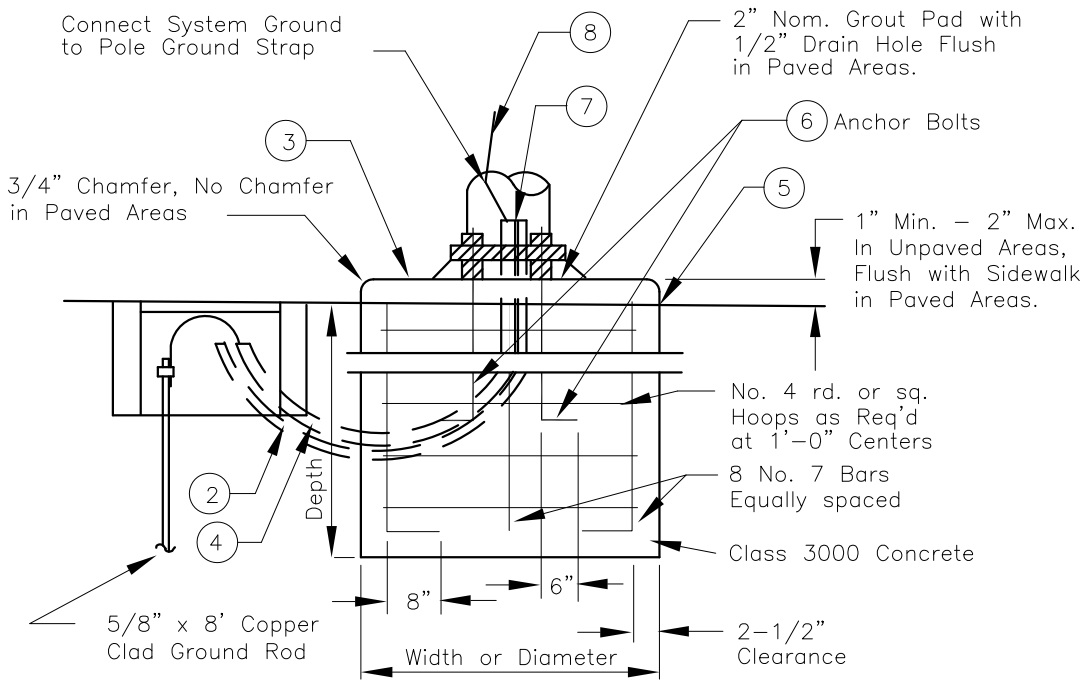

TYPICAL SECTION

FOUNDATION DEPTHS		
W x R = (ft.)^3	3' Rd.	3' Sq. 4' Rd.
≤ 740	10'	7'
≤ 1100	14'	8'
≤ 1720	19'	13'

W = WINDLOAD PROJECTED AREA
R = MOMENT ARM
See Note (1)

NOTES

(1) FOUNDATION DEPTHS BASED ON 2500 PSF AVERAGE LATERAL BEARING PRESSURE AND ø @ 26". IF SOIL CONDITIONS AT SITE ARE NOT EQUAL TO OR BETTER THAN THIS THE CONTRACTOR SHALL PROVIDE NEW FOUNDATION DIMENSIONS.

(2) ALL POLES AND POLE BASES SHALL HAVE ONE EXTRA 2" CONDUIT THAT EXTENDS TO AND IS CAPPED IN THE NEAREST JUNCTION BOX. UNLESS OTHERWISE APPROVED BY THE ENGINEER.

(3) CONCRETE SHALL BE CLASS 3000 POURED IN PLACE WITH FORMING ON THE TOP 3–1/2" AND ALL ABOVE GRADE PORTIONS OF THE FOUNDATION.

(4) SIZE AND NUMBER OF CONDUIT(S) PER PLAN.

(5) SAW CUT PAVING WHEN FOUNDATION IS IN EXISTING PAVED SURFACE.

(6) BOLT CIRCLES AND ANCHOR BOLTS ACCORDING TO MANUFACTURER'S SHOP DRAWINGS AND SPECS.

(7) CONDUIT SHALL EXTEND 3" ABOVE FOUNDATION.

(8) EXTEND SYSTEM GROUND TO ALL EQUIPMENT (PPB'S, TERMINAL CABINETS, PED SIGNAL HEADS, ETC.) THAT IS LESS THAN 12' ABOVE ABOVE POLE BASE WHEN CONCRETE POLES ARE REQUIRED.

CITY OF EVERETT
PUBLIC WORKS DEPARTMENT

SIGNAL POLE FOUNDATION
TYPES 2 AND 3

5-17-1994
Date:

817
COE Std Dwg:

T:\ACad\eps-coe design & constr specs for development\CURRENT\std detail dwgs\Dwg Files\STD817.dwg, 2/21/2014 4:34:59 PM

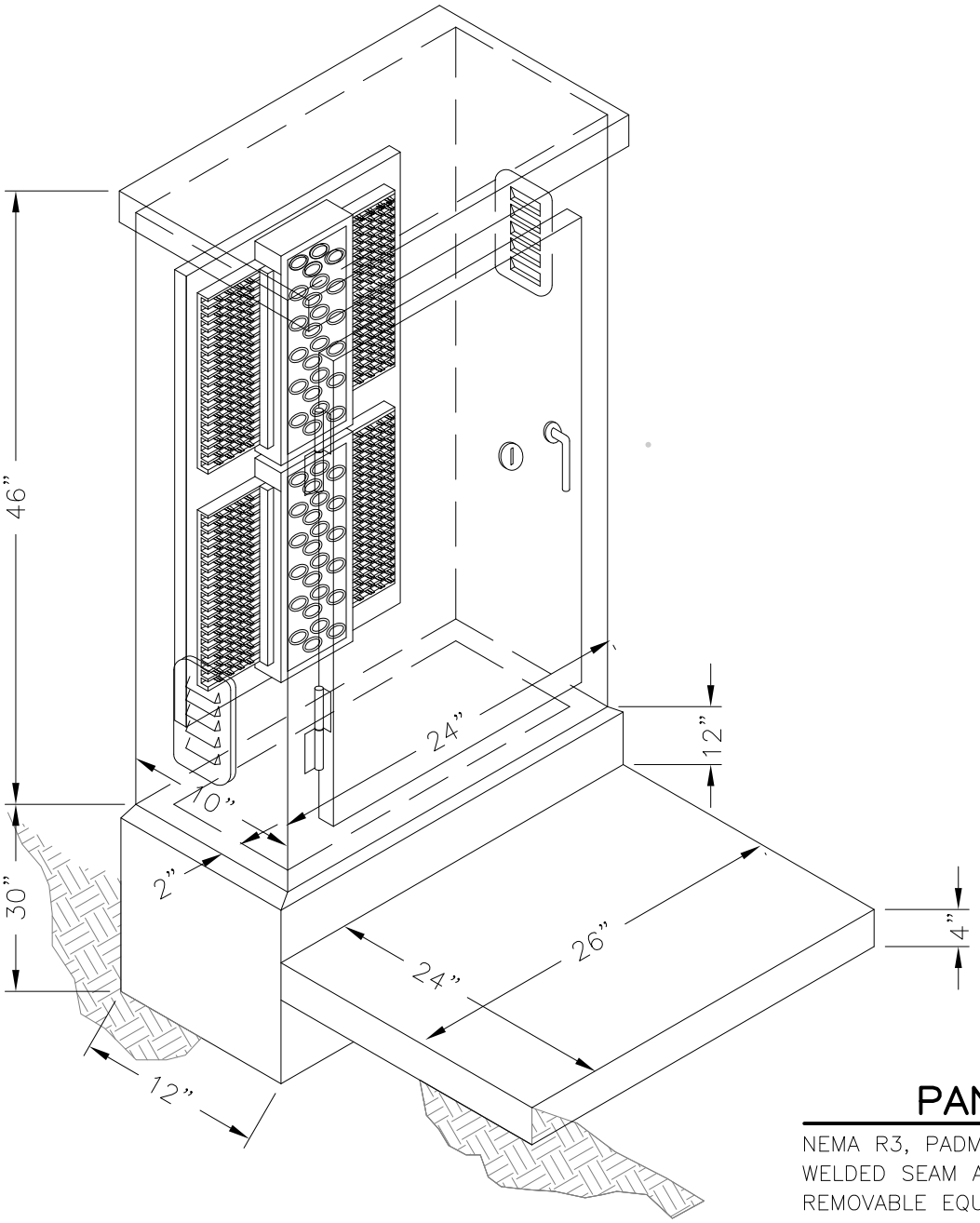

PANEL NOTES:

NEMA R3, PADMOUNT
WELDED SEAM ALUMINUM 0.125"
REMOVABLE EQUIPMENT MOUNTING PAN
HEAVY DUTY LIFT-OFF HINGE
CLOSED CELL NEOPRENE GASKET ON DOOR
STAINLESS STEEL VAULT HANDLE
BEST CO LOCK WITH CX CORE
2 SCREENED AND GASKETED VENTS

50 PAIR TERMINAL BLOCK WITH GAS TUBE PROTECTION MODULES
RELIANCE COMM/TEC #50VSR4P4MH(OR EQUAL)

FINISH: POWDER COAT WHITE INSIDE AND OUT
EPOXY ALUMINUM OVERCOAT OUTSIDE.

FOUNDATION & RAMP NOTES:

FORMED CONSTRUCTION
CLASS 3000 CONCRETE
1/2" CHAMFER AT TOP SERVICE
1/2"x3" STAINLESS STEEL ANCHOR BOLTS (4EA)
CONDUIT TO EXTEND A MIN OF 2" ABOVE FOUNDATION
FOUNDATION AND RAMP TO SIT ON UNDISTURBED SOIL

CITY OF EVERETT PUBLIC WORKS DEPARTMENT	TELEMETRY CABINET AND FOUNDATION	3-25-1999 Date:
		818 COE Std Dwg:

T:\ACad\eps-coe design & constr specs for development\CURRENT\std detail dwgs\Dwg Files\STD818.dwg, 2/21/2014 4:35:45 PM

SIDE

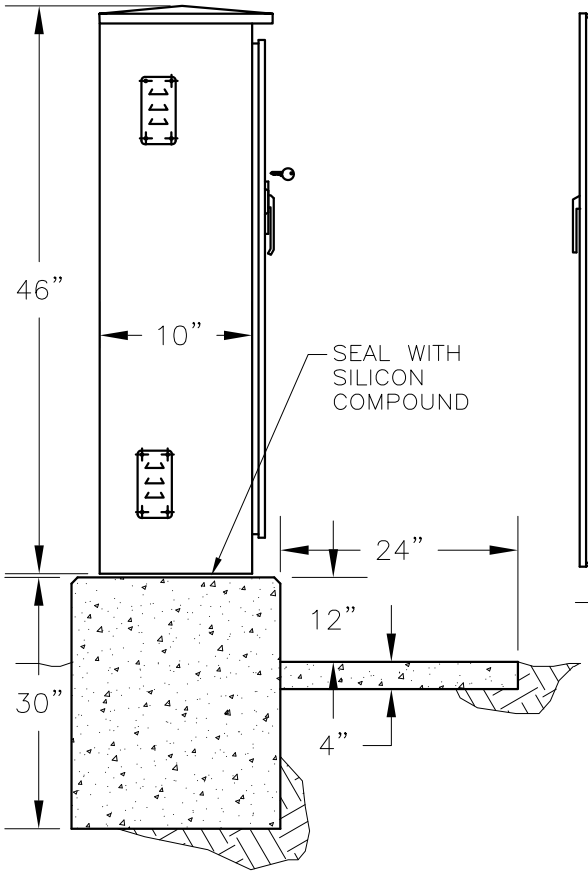

FRONT

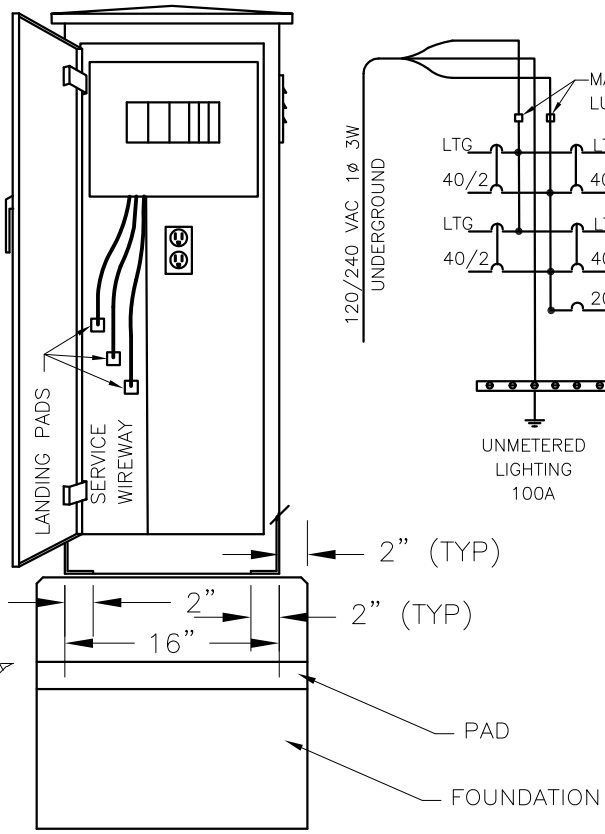

WIRING SCHEMATIC

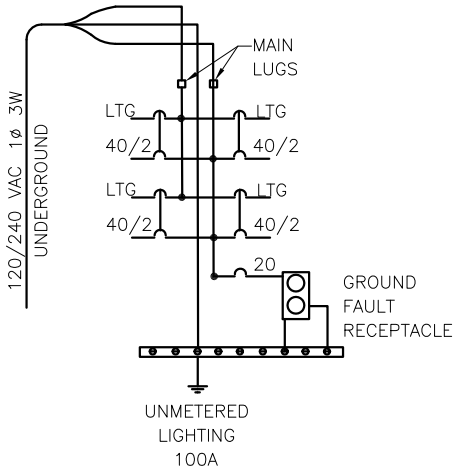

FOUNDATION & PAD NOTES

1. FORMED CONSTRUCTION.
2. CLASS 3000 CONCRETE.
3. 1" CHAMFER AT FOUNDATION TOP.
4. 3/8"x3" STAINLESS STEEL ANCHOR BOLTS (4EA)
5. FOUNDATION AND PAD TO SIT ON UNDISTURBED SOIL.
6. CONDUIT TO EXTEND A MIN. OF 6" ABOVE FOUNDATION.

CABINET NOTES:

7. CABINET: NEMA 3R, PAD MOUNT, 12 GA PRE GALVANIZED STEEL, OPEN BOTTOM WITH 2" RETURN. REMOVABLE EQUIPMENT MOUNTING PAN. 2 SCREENED AND GASKETED VENTS. U.L. LISTED.
8. DOOR: HEAVY DUTY CONCEALED HINGE, LIFTOFF TYPE, WITH STAINLESS STEEL VAULT HANDLE, AND CLOSED CELL NEOPRENE GASKET. SUPPLY WITH "BEST" LOCK AND BLUE CONSTRUCTION CORE.
9. PANEL BOARD: 120/240 VAC, ø, 3 WIRE, 100 AMP, 8CKT (SQUARE D Q08-16L100S MAIN LUG ONLY, OR EQUAL), 10 KAIC, WITH TWO (2) 40/2 ILLUMINATION BRANCHES, ONE (1) 20/1 GROUND FAULT RECEPTACLE BRANCH.
10. PAINT: ZINC RICH ALUMINUM OUTSIDE, WHITE INSIDE OVER PRIME OVEN BAKED ENAMEL.
11. TOTAL NUMBER OF BREAKERS IN CABINET NOT TO EXCEED 6.
12. DESIGN BASED ON "SKYLINE: MODEL 47550.

CITY OF EVERETT **PUBLIC WORKS DEPARTMENT**	SERVICE CABINET FOR STREET ILLUMINATION (UNMETERED)	7-9-2007 Date: 819 COE Std Dwg:

T:\ACad\eps-coe design & constr specs for development\CURRENT\std detail dwgs\Dwg Files\STD819.dwg, 2/21/2014 4:36:38 PM

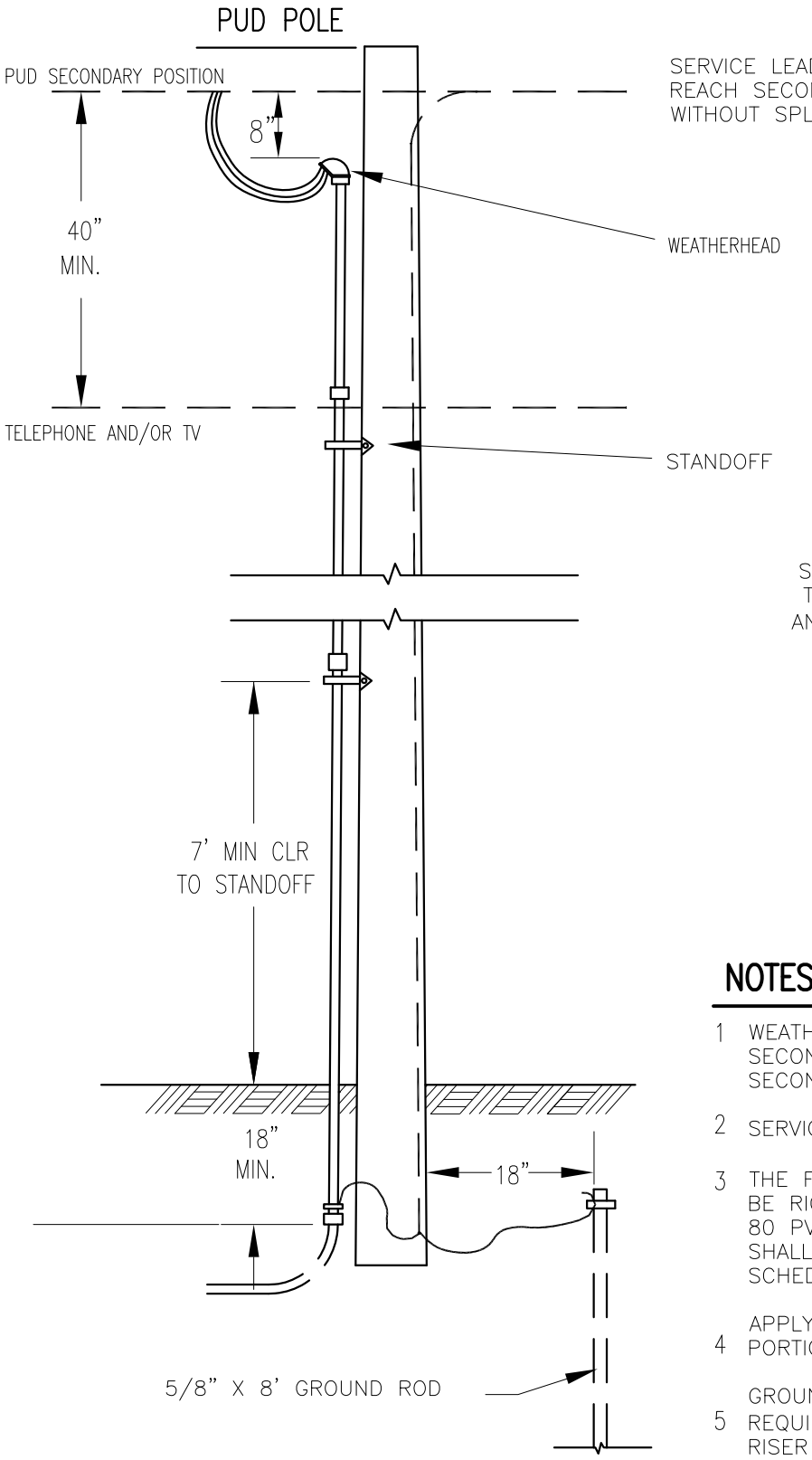

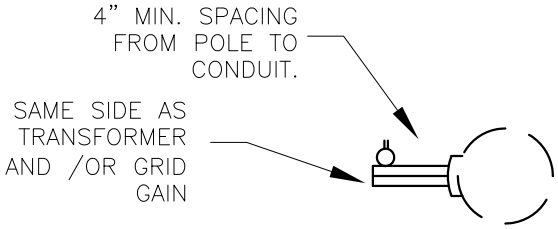

RISER POSITION DETAIL

NOTES

1. WEATHERHEAD SHALL BE LOCATED 8" BELOW SECONDARY. THE PUD WILL MAKE ALL SECONDARY
2. SERVICE CONNECTIONS AT THE POLE.
3. THE FIRST TEN (10) FEET OF RISER SHALL BE RIGID GALVANIZED STEEL OR SCHEDULE 80 PVC CONDUIT AND REMAINING PORTION SHALL BE SCHEDULE 40 PVC OR SCHEDULE 80 PVC.
4. APPLY A BITUMINOUS COATING ON BURIED PORTION OF STEEL CONDUIT
5. GROUND CLAMP & TAP TO POLE GROUND REQUIRED WHEN FIRST TEN (10) FEET OF RISER IS RIGID STEEL.

FORMERLY STD DWG 330

CITY OF EVERETT
PUBLIC WORKS DEPARTMENT

CONDUIT RISER DETAIL
FOR PUD SERVICE DROP

6-12-1995
Date:

820
COE Std Dwg:

T:\ACad\eps-coe design & constr specs for development\CURRENT\std detail dwgs\Dwg Files\STD820.dwg, 2/21/2014 4:37:34 PM

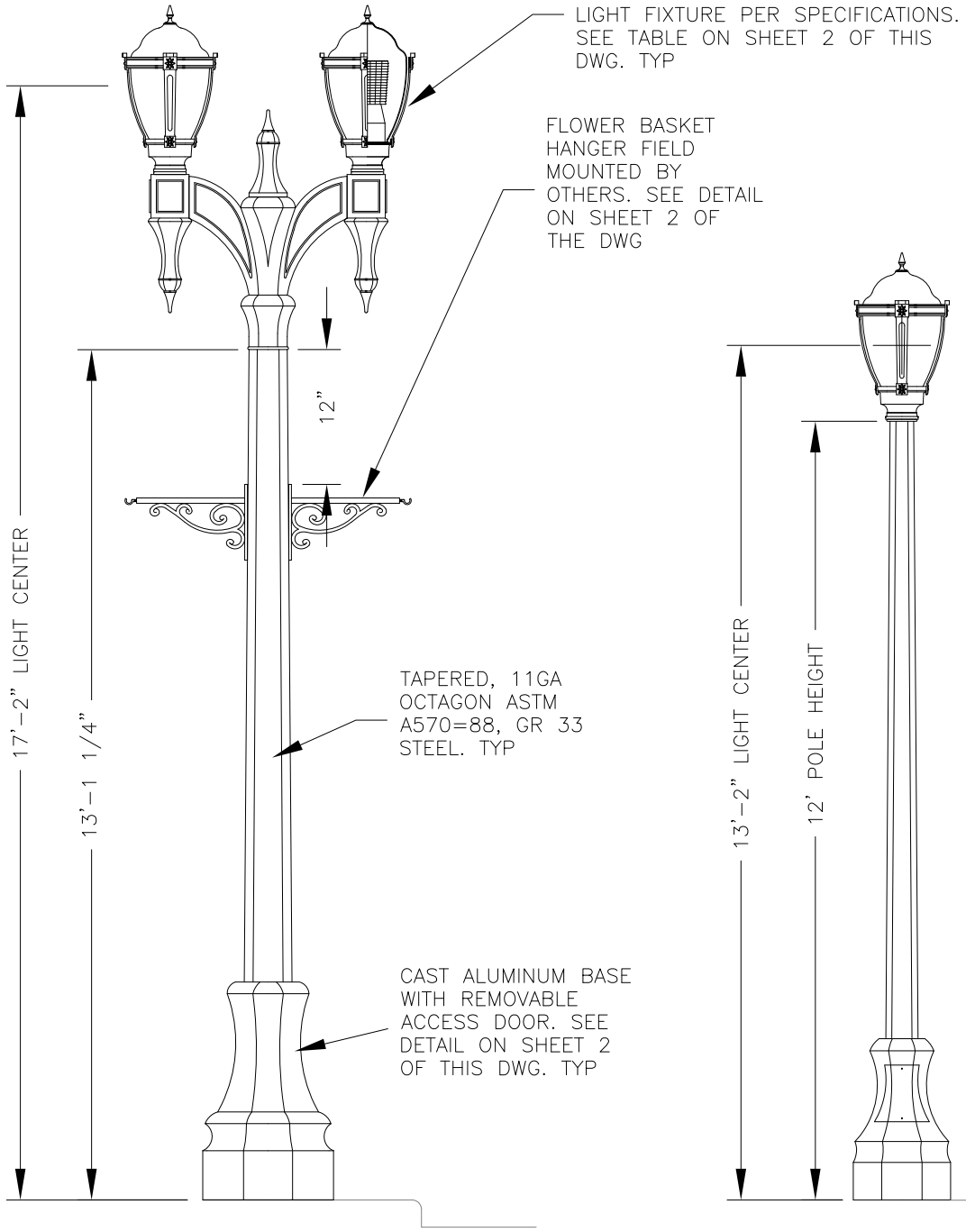

(OLYMPIC LIGHTING REFERENCE NO. 0-E24-E2-OT/13)

TYPE A
TWIN FIXTURE MOUNTING

TYPE B
SINGLE FIXTURE MOUNTING

CITY OF EVERETT
PUBLIC WORKS DEPARTMENT

DECORATIVE STREET LIGHT
(SHEET 1 OF 3)

6-15-2009
Date:

822
COE Std Dwg:

T:\ACad\eps-coe design & constr specs for development\CURRENT\std detail dwgs\Dwg Files\STD822.dwg, 2/21/2014 4:38:33 PM

SPECIFICATIONS	
LAMP POST STYLE:	PER MANUFACTURER
CASTINGS STYLE	"EVERETT" SPLIT BASE ASSEMBLY
MATERIAL:	ASTM A356 ALUMINUM
SUPPORT POLE:	TAPERED, 11GA. OCTAGON
MATERIAL:	ASTM A570=88, Gr. 33 STEEL
FIXTURE STYLE	CYZLONE CP3034–GR5–LAF–100MH–PS–240–S2 –RAL6012TX–R30
LIGHT SOURCE:	MH, 240 VOLT, OR 100 W – OR AS SPECIFIED
FINISH:	PRIME & FINISH PAINT, EVERETT GREEN
ANCHOR BOLTS:	1x48x6 A307 GALV.
FLOWER BASKET HANGER:	TWIN 20" DECORATIVE

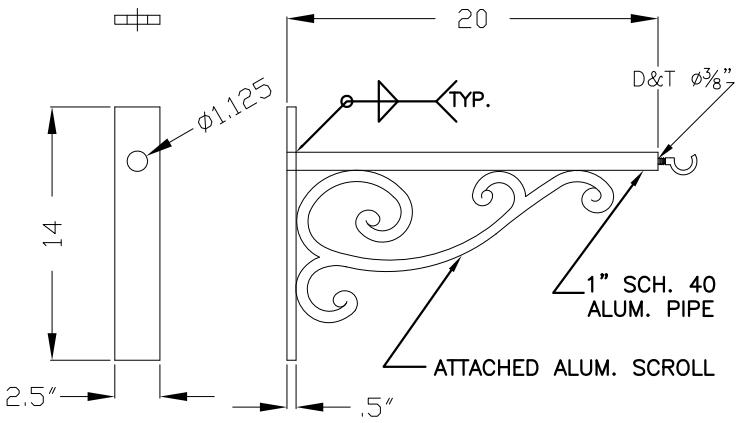

(OLYMPIC LIGHTING REFERENCE NO. 85–FBH18")

FLOWER BASKET HANGER (OPTIONAL)

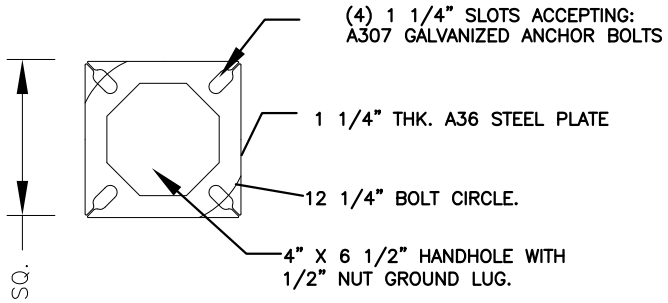

TWIN FIXTURE

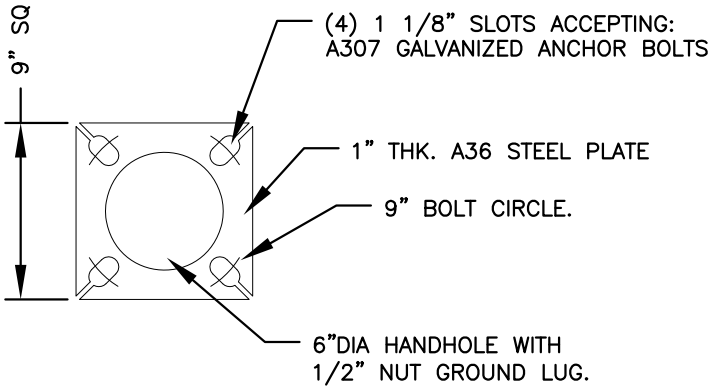

SINGLE FIXTURE

STD BASE PLATE

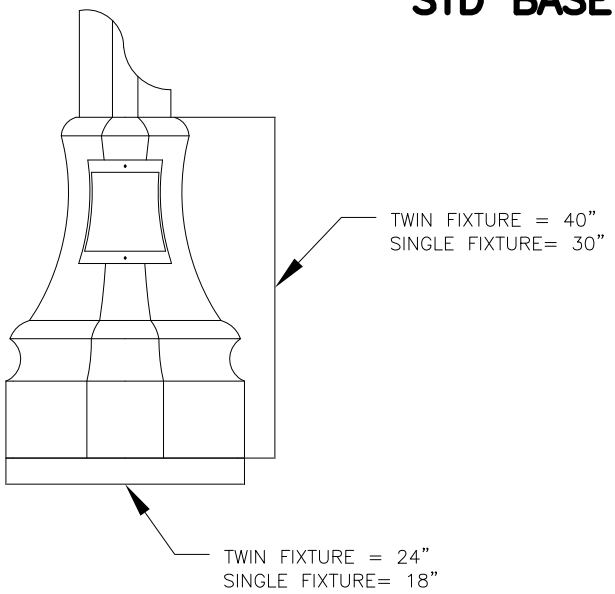

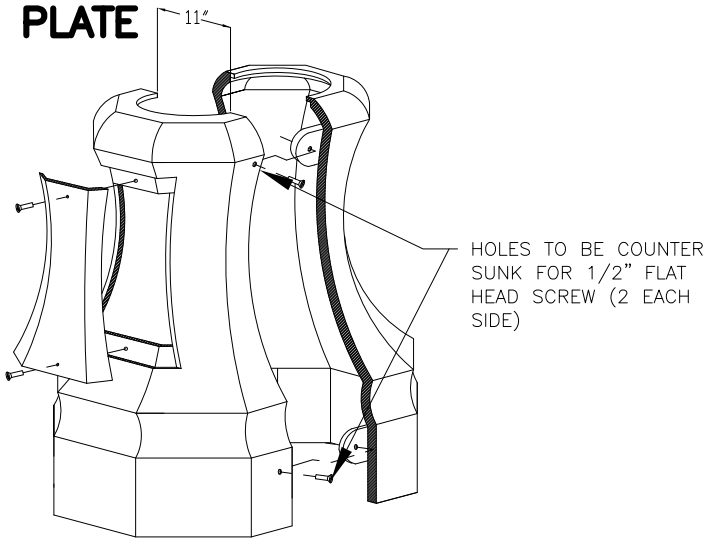

CAST ALUMINUM BASE

CITY OF EVERETT PUBLIC WORKS DEPARTMENT	DECORATIVE STREET LIGHT (SHEET 2 OF 3)	7-2-2013 Date: 822 COE Std Dwg:

T:\ACad\eps-coe design & constr specs for development\CURRENT\std detail dwgs\Dwg Files\STD822.dwg, 2/21/2014 4:39:26 PM

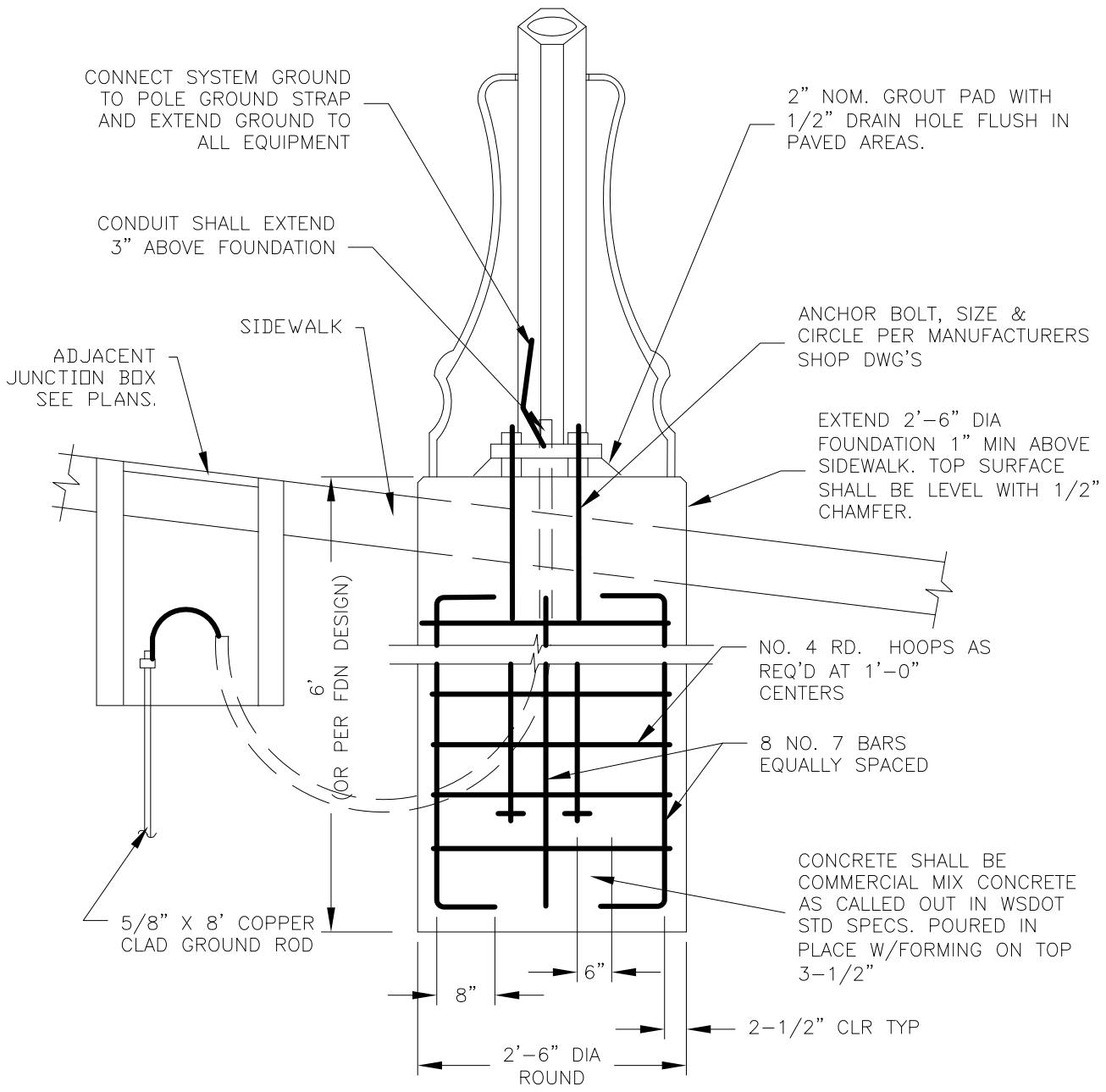

FOUNDATION DETAIL

CITY OF EVERETT **PUBLIC WORKS DEPARTMENT**	DECORATIVE STREET LIGHT (SHEET 3 OF 3)	6-15-2009 Date: 822 COE Std Dwg:

T:\ACad\eps-coe design & constr specs for development\CURRENT\std detail dwgs\Dwg Files\STD822.dwg, 2/21/2014 4:40:00 PM

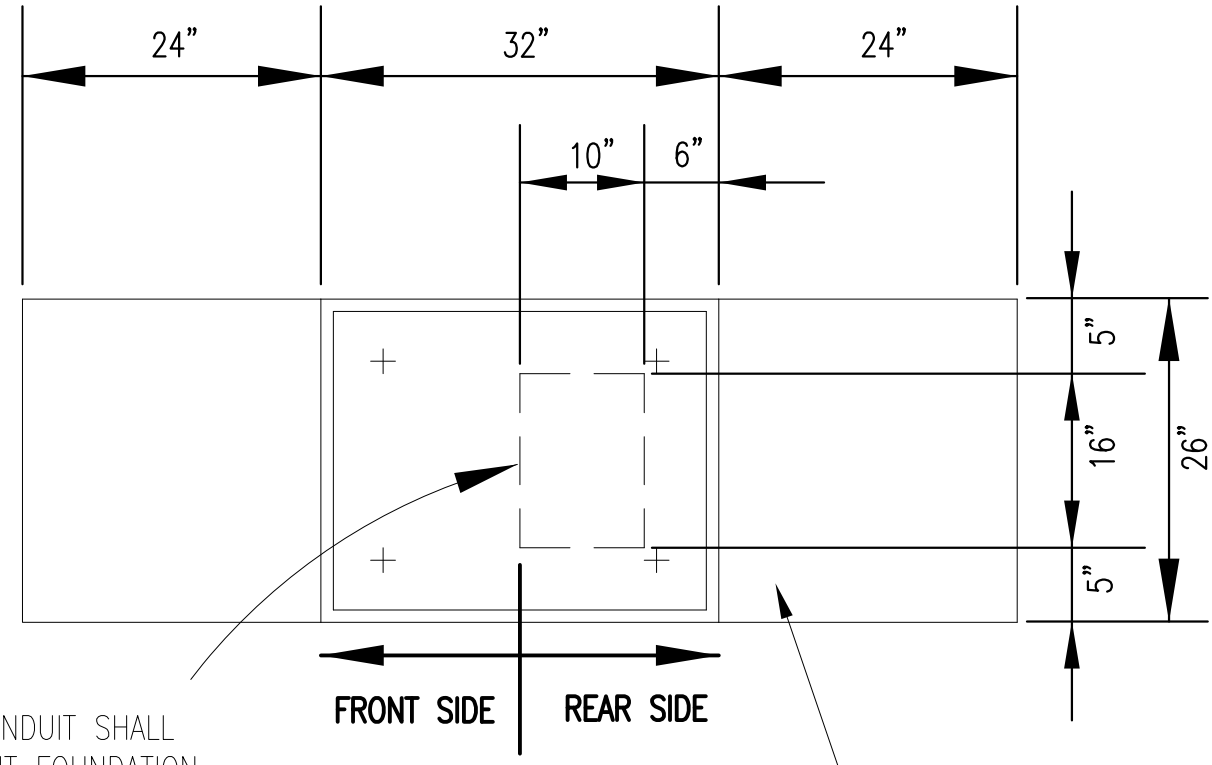

PLAN VIEW

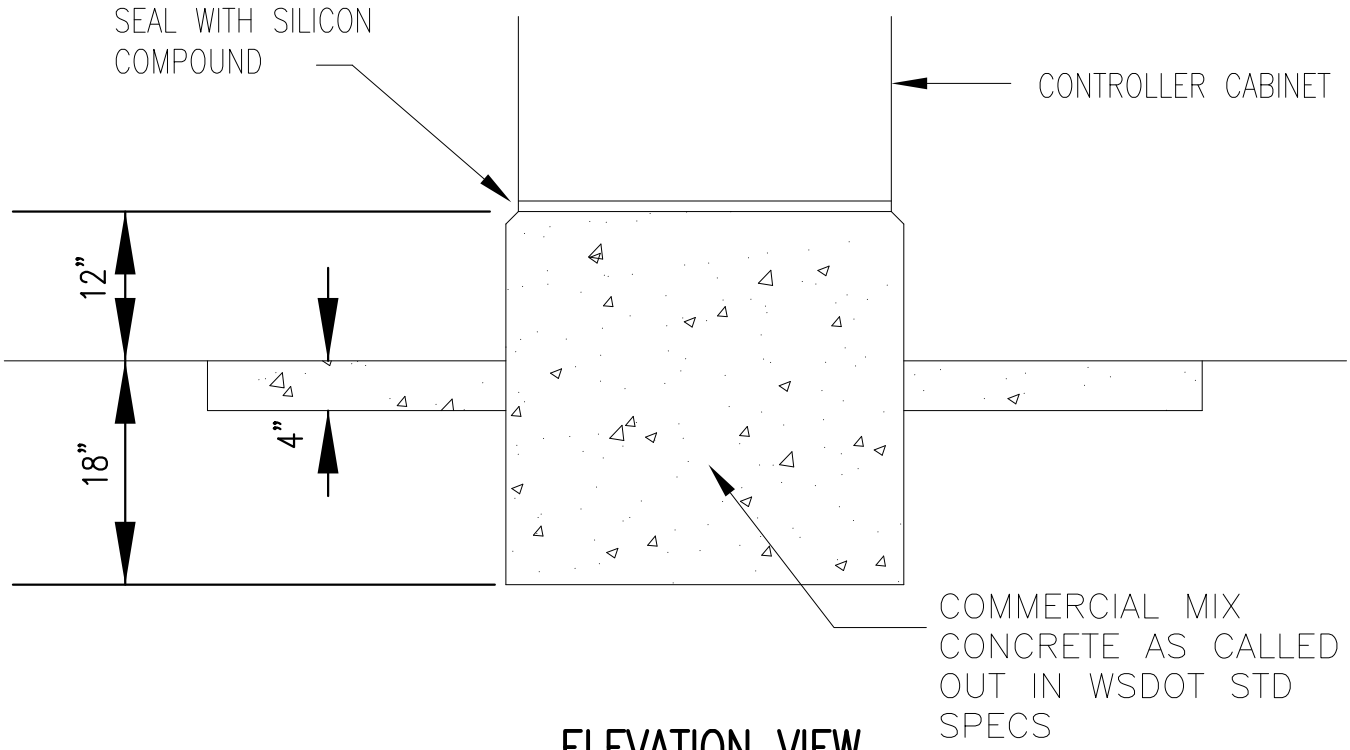

ELEVATION VIEW

CITY OF EVERETT PUBLIC WORKS DEPARTMENT	MODEL 332 CABINET FOUNDATION DETAIL	5-11-2010 Date: 823 COE Std Dwg:

T:\ACad\eps-coe design & constr specs for development\CURRENT\std detail dwgs\Dwg Files\STD823.dwg, 2/21/2014 4:40:58 PM

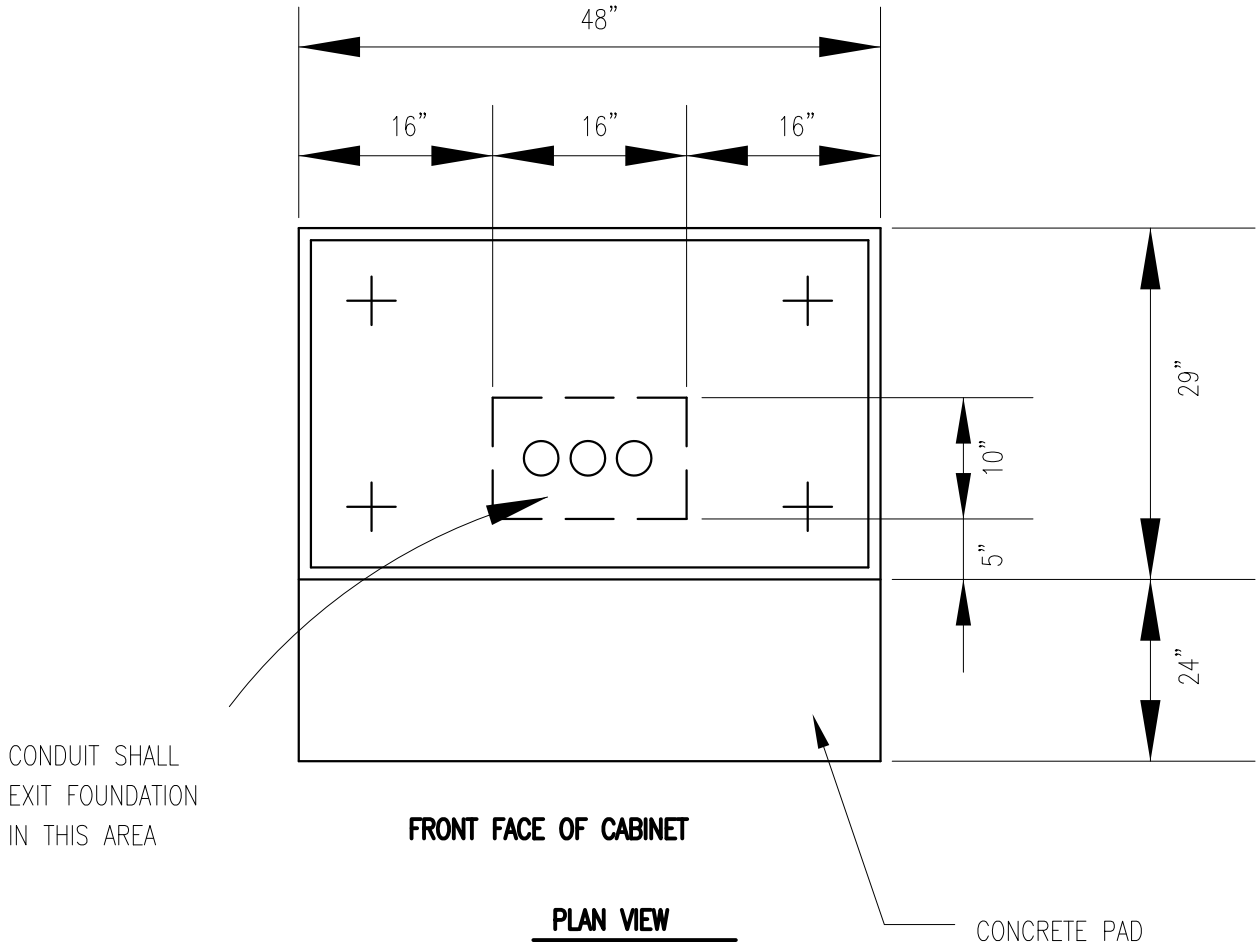

PLAN VIEW

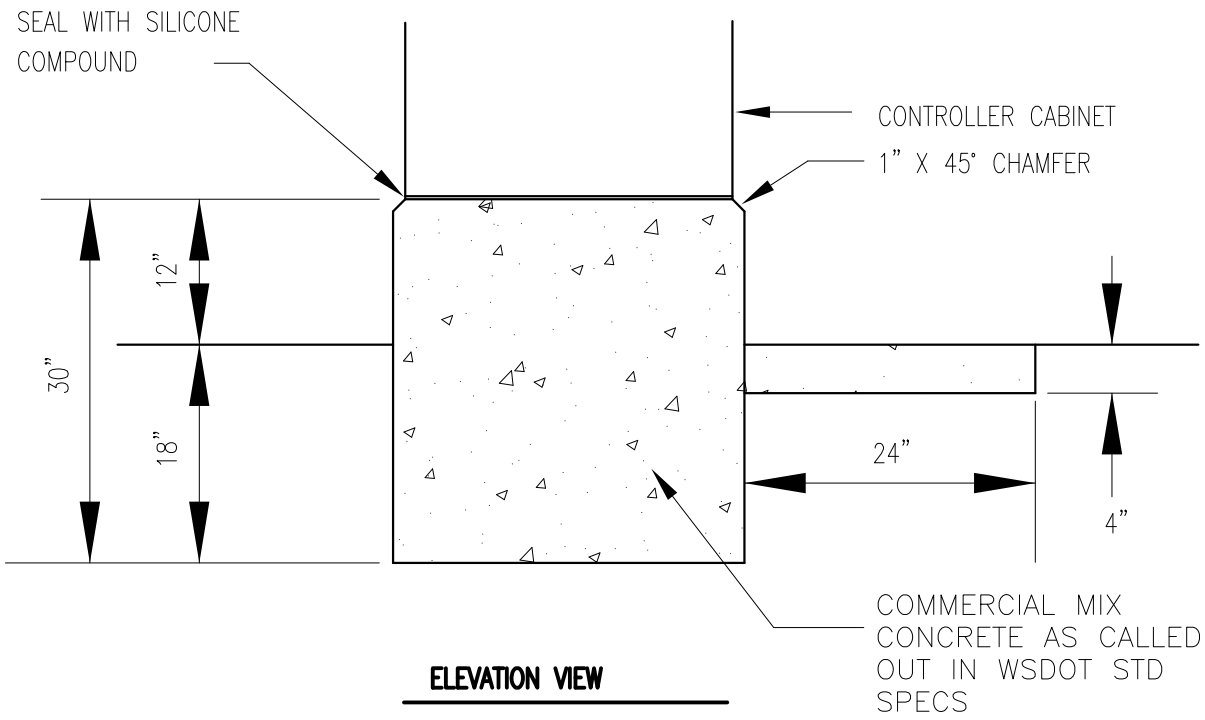

ELEVATION VIEW

REPLACES STD DWG 710, 9-21-91

CITY OF EVERETT **PUBLIC WORKS DEPARTMENT**	NEMA TYPE "P" CABINET **FOUNDATION DETAIL**	**5-11-2010** Date: **824** COE Std Dwg:

T:\ACad\eps-coe design & constr specs for development\CURRENT\std detail dwgs\Dwg Files\STD824.dwg, 2/21/2014 4:41:46 PM

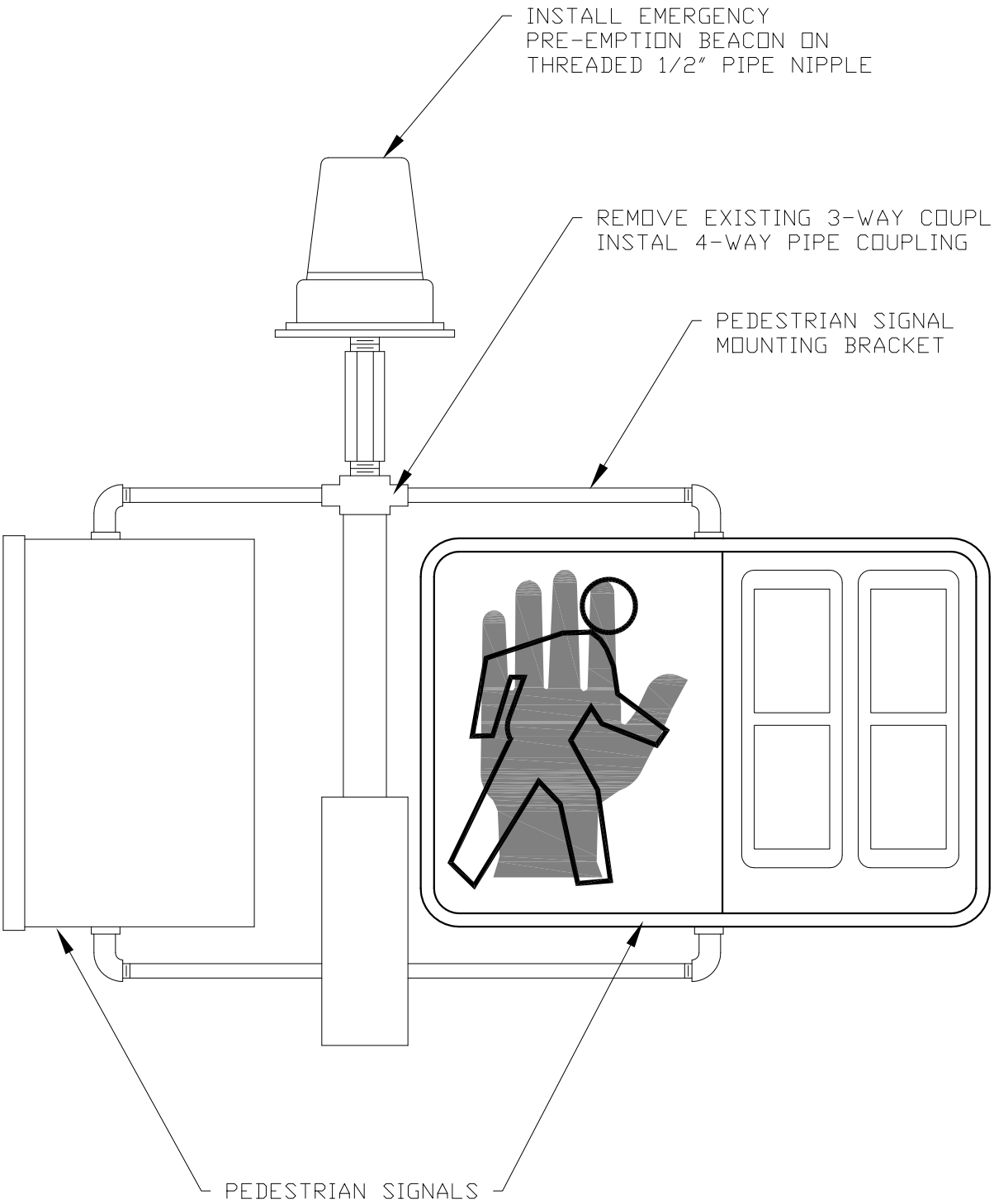

CITY OF EVERETT
PUBLIC WORKS DEPARTMENT

EMERGENCY PRE-EMPTION BEACON
MOUNTING DETAIL (TYPE PS POLE)

6-27-2013
Date:

825
COE Std Dwg:

T:\ACad\eps-coe design & constr specs for development\CURRENT\std detail dwgs\Dwg Files\STD825.dwg, 2/21/2014 4:42:43 PM

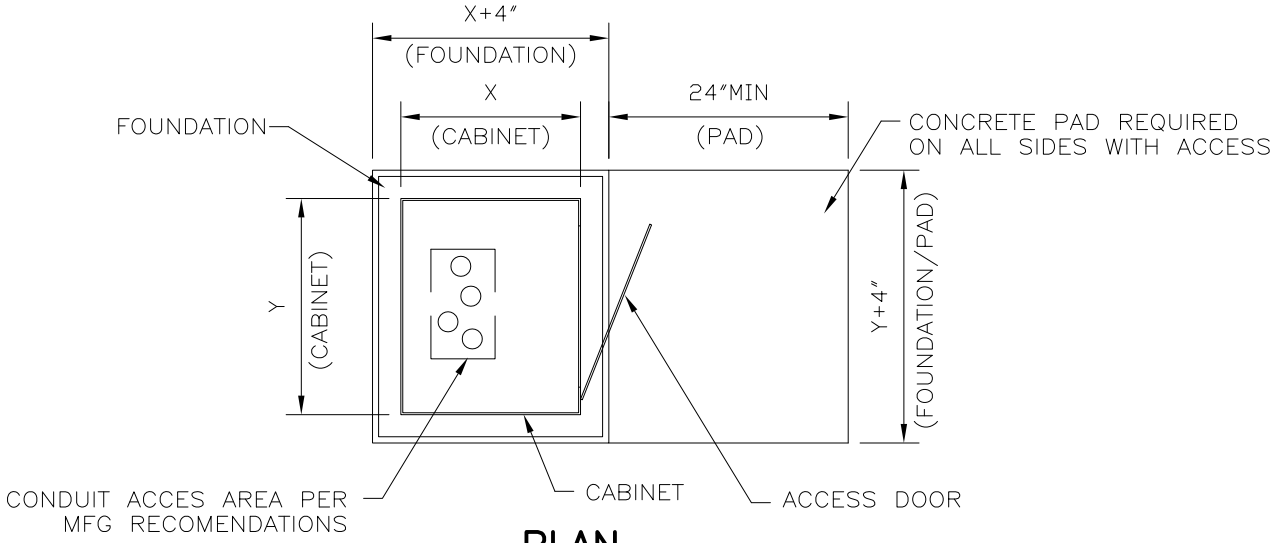

PLAN

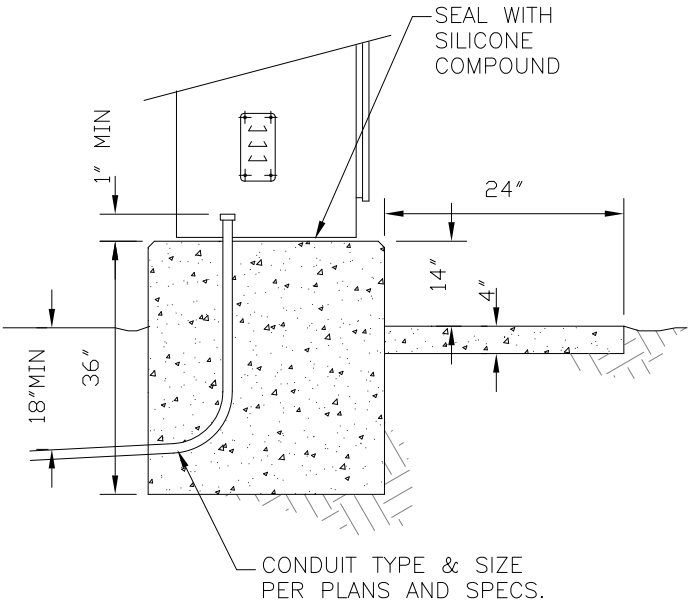

NON–ACCESS SIDE

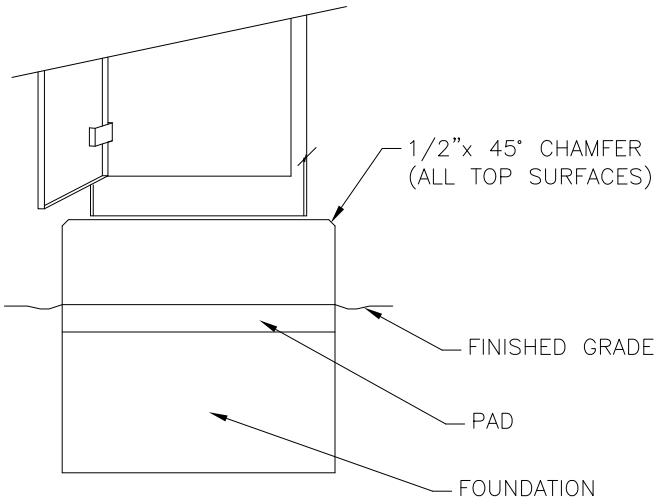

ACCESS SIDE

FOUNDATION & PAD NOTES

1. FORMED CONSTRUCTION
2. COMMERCIAL MIX CONCRETE AS CALLED OUT IN WSDOT STD SPECS.
3. 1/2" CHAMFER AT FOUNDATION TOP
4. STAINLESS STEEL ANCHOR BOLTS, LOCATION, SIZE AND QUANTITY PER CABINET MFG SPEC.
5. FOUNDATION AND PAD TO SIT ON UNDISTURBED SOIL
6. CONDUIT TO EXTEND A MIN OF 6" ABOVE FOUNDATION
7. TOP SURFACE SHALL BE LEVEL.

CITY OF EVERETT PUBLIC WORKS DEPARTMENT	ELECTRICAL CABINET FOUNDATION	5-11-2010 Date: 826 COE Std Dwg:

T:\ACad\eps-coe design & constr specs for development\CURRENT\std detail dwgs\Dwg Files\STD826.dwg, 2/21/2014 4:43:25 PM

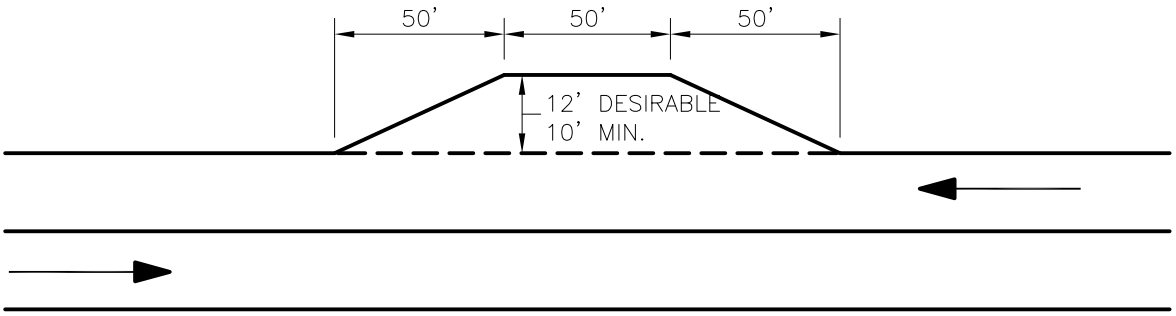

COLLECTOR ARTERIAL

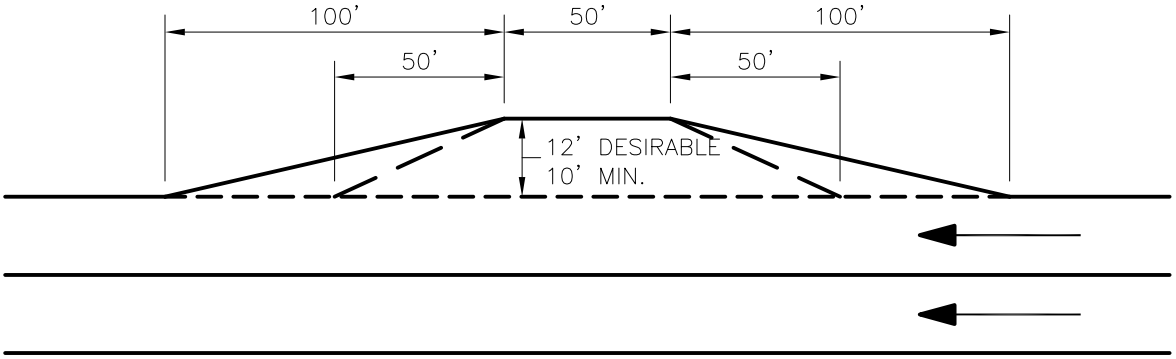

MINOR ARTERIAL

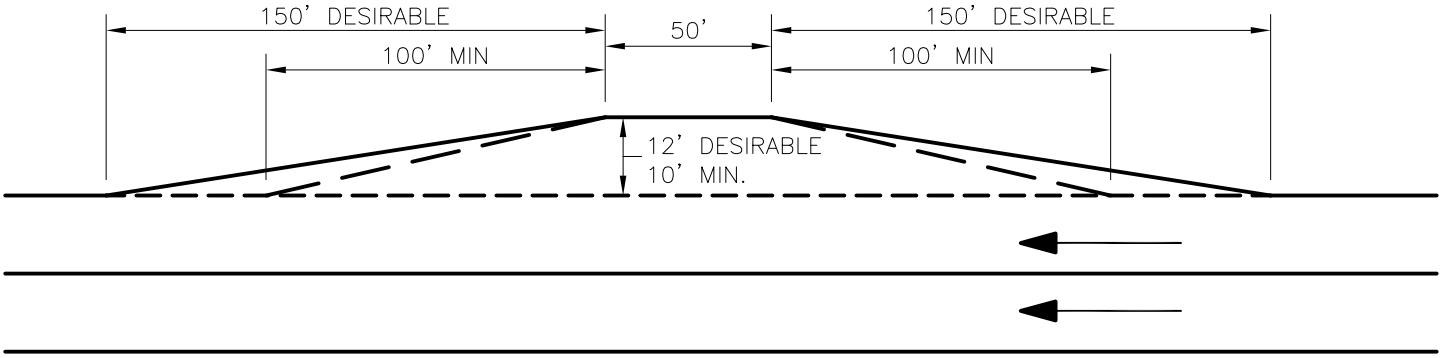

PRINCIPAL ARTERIAL

NOTES:

1. LOCAL ACCESS "A" & "B" STREETS AS DEFINED BY STD DWG 300 DO NOT REQUIRE BUS TURNOUTS.
2. LOCATION AND REQUIREMENT FOR BUS STOPS WILL BE AT THE DIRECTION OF THE CITY ENGINEER.
3. PAVEMENT SECTION FOR BUS TURNOUT SHALL BE THE SAME AS REQUIRED FOR THE ADJACENT STREET (SEE STD DWG 301).

CITY OF EVERETT PUBLIC WORKS DEPARTMENT	BUS TURNOUT DIMENSIONS	9-21-1991 Date: 901 COE Std Dwg:

T:\ACad\eps-coe design & constr specs for development\CURRENT\std detail dwgs\Dwg Files\STD901.dwg, 2/21/2014 4:44:27 PM

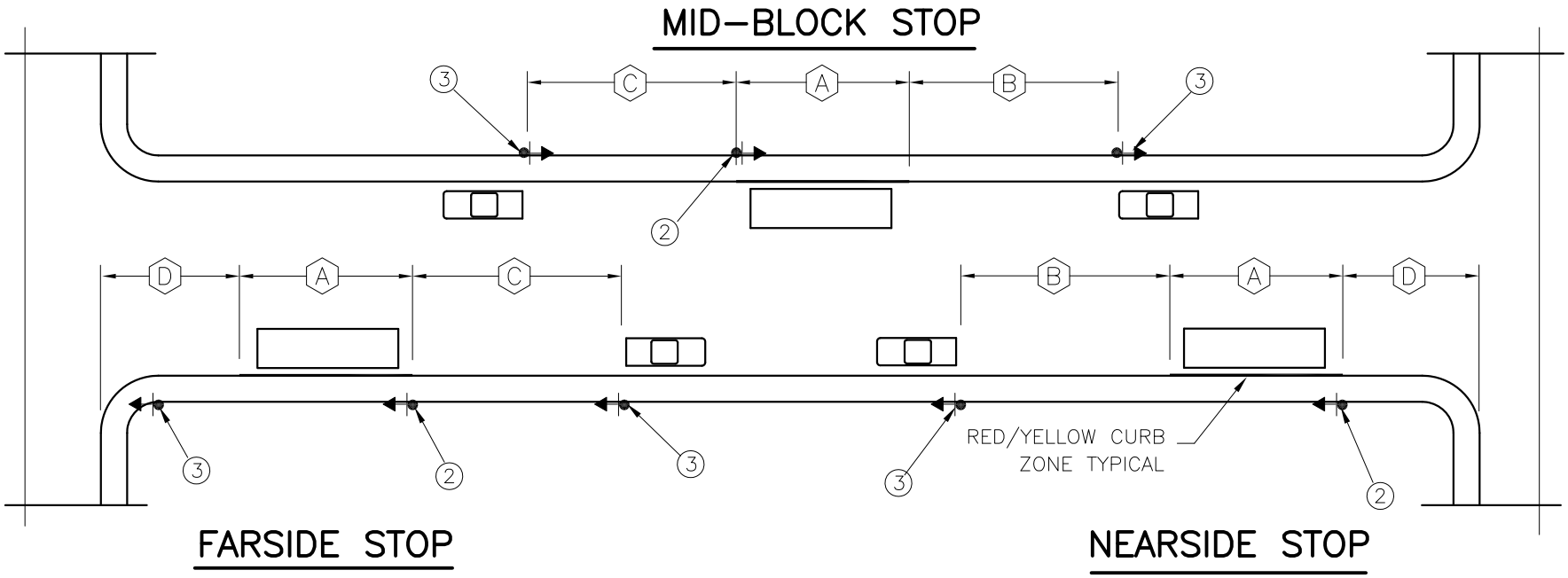

DIMENSIONS:

(A) BERTH – 50' FOR SINGLE 40' BUS. 70' FOR ARTICULATED BUS

(B) ENTRANCE CLEARANCE – 60' MIN. 70' FOR ARTICULATED BUS, OR HIGH SPEED AND/OR HIGH VOLUME STREETS.

(C) EXIT CLEARANCE – 40' MIN, 50' DESIRABLE FOR HIGH SPEED AND/OR HIGH VOLUME STREETS, AND REQUIRED FOR ARTICULATED BUS.

(D) CLEARANCE – 25' IF ROUTE APPROACH/CONTINUES STRAIGHT. 50' IF ROUTE APPROACH/CONTINUATION REQUIRES TURN AT INTERSECTION.

NOTES:

1. LOCATION OF BUS STOPS MUST BE APPROVED BY THE CITY ENGINEER.
2. INSTALL BUS STOP SIGN (R7–28 OR R7–29) A MIN OF 2–1/2' BACK FROM FACE OF CURB OR BEHIND BACK OF SIDEWALK AS APPLICABLE.
3. INSTALL BUS ZONE NO PARKING SIGNS (R7–107A) A MIN OF 2–1/2' BACK FROM FACE OF CURB OR BEHIND BACK OF SIDEWALK AS APPLICABLE.

EVERETT

CITY OF EVERETT
PUBLIC WORKS DEPARTMENT

BUS STOP DIMENSIONS

Date: 9-21-1991

COE Std Dwg: 902

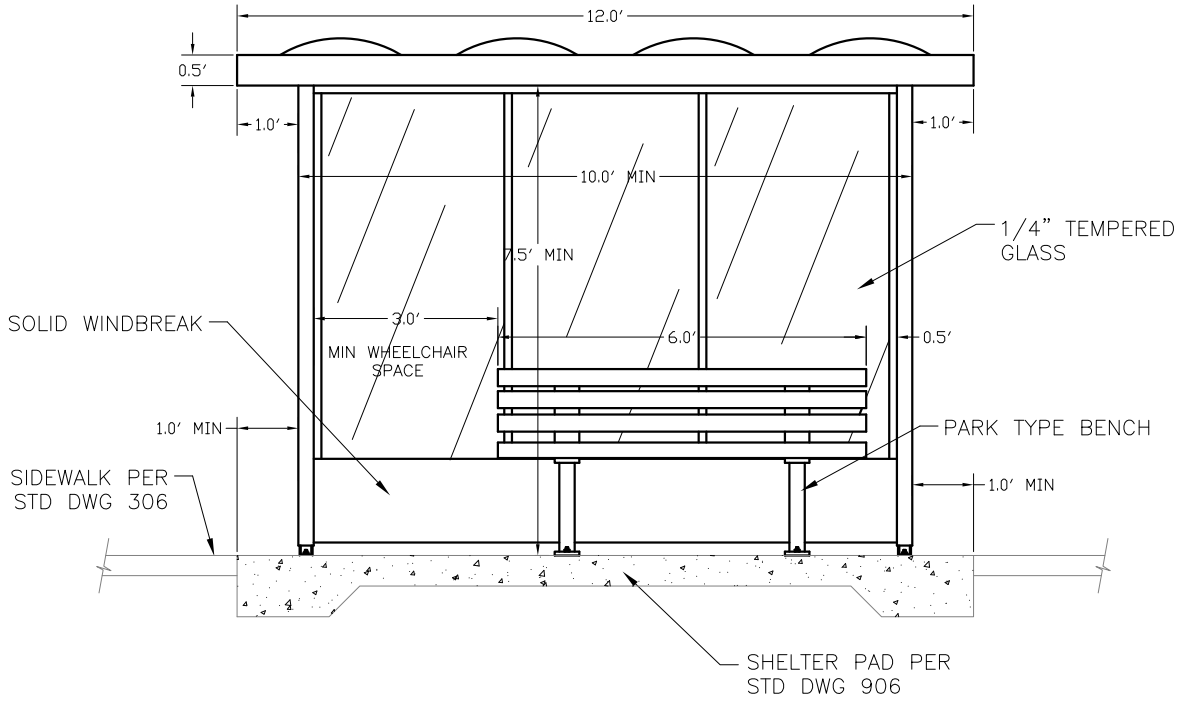

FRONT ELEVATION

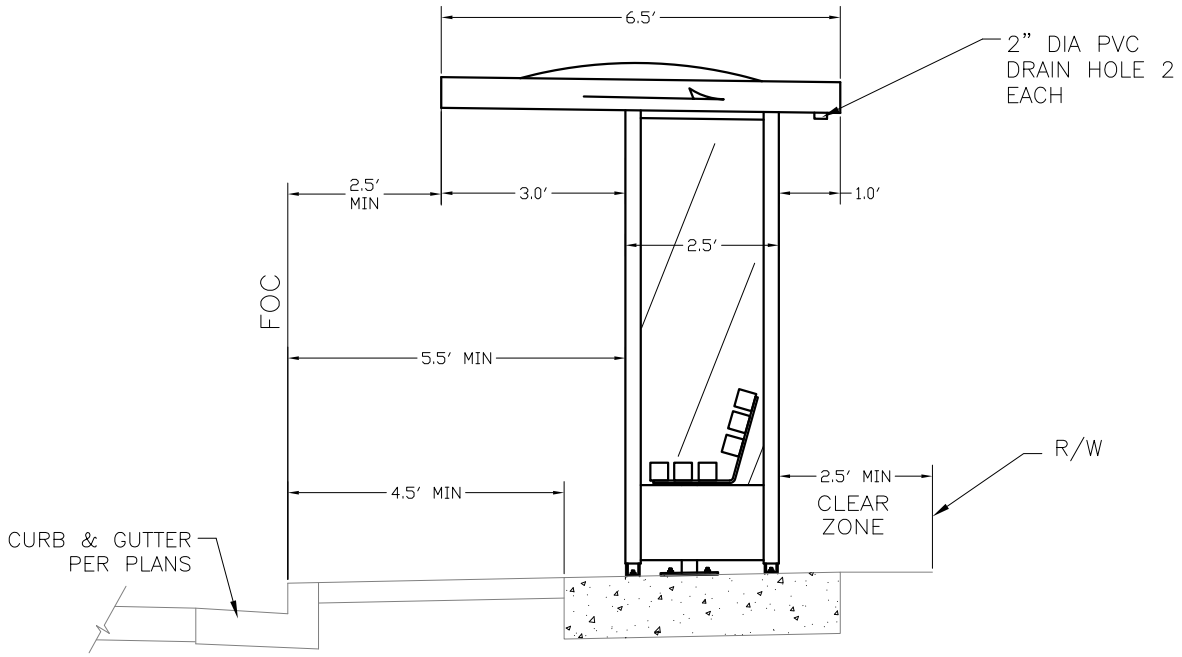

END ELEVATION

CITY OF EVERETT
PUBLIC WORKS DEPARTMENT

BUS SHELTER

2-17-1995
Date:

904
COE Std Dwg:

T:\ACad\eps-coe design & constr specs for development\CURRENT\std detail dwgs\Dwg Files\STD904.dwg, 2/21/2014 4:46:05 PM

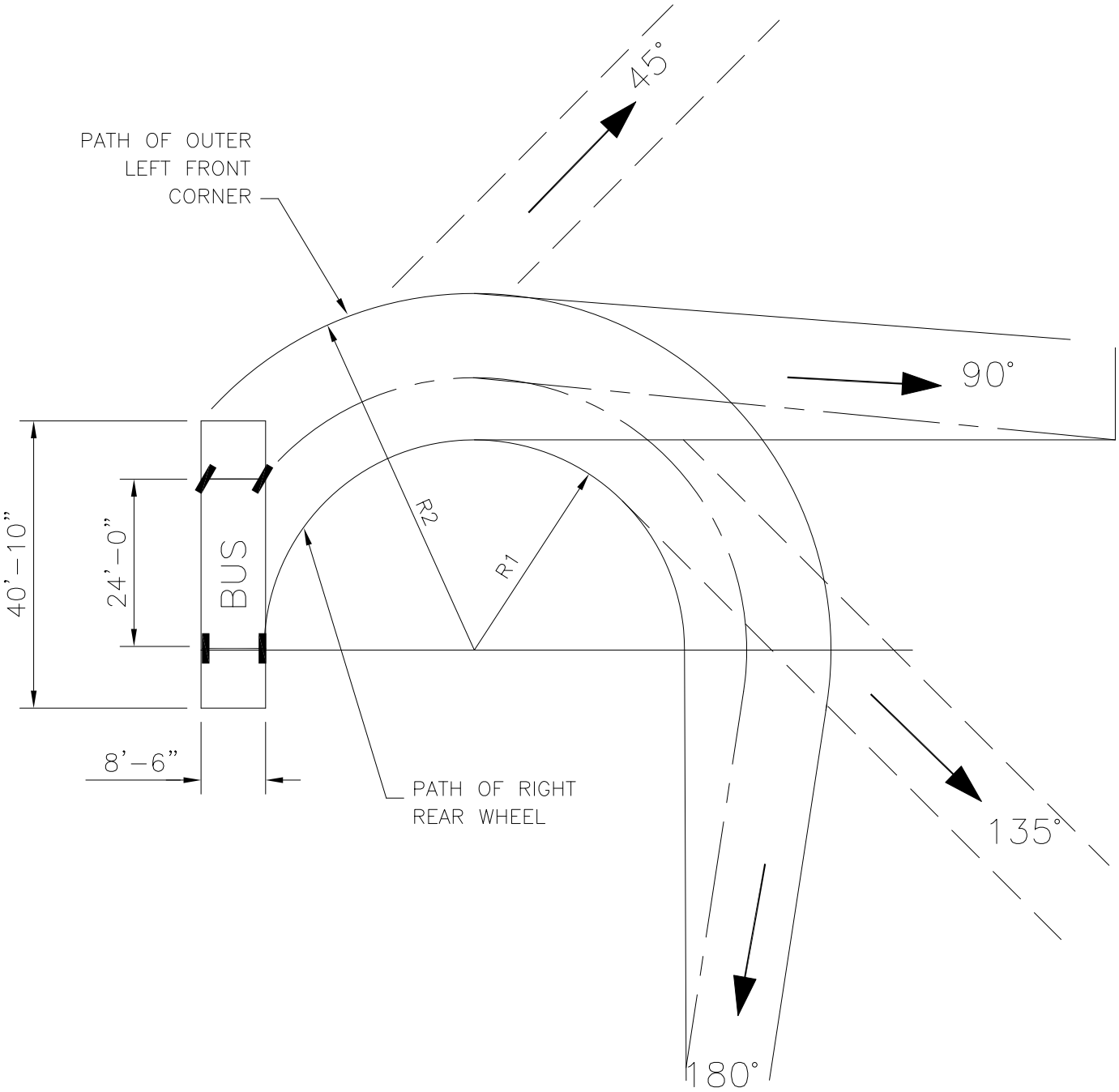

NOTES:

TEMPLATES FOR RIGHT-TURN ONLY. REVERSE FOR LEFT-TURN.

	MINIMUM	RECOMMENDED
R1=RADIUS OF INNER REAR WHEEL	30'-0"	35'-0"
R2= RADIUS OF OUTER FRONT CORNER	50'-0"	55'-0"

CITY OF EVERETT PUBLIC WORKS DEPARTMENT	BUS TURNING RADII	9-21-1991 Date:
		905 COE Std Dwg:

T:\ACad\eps-coe design & constr specs for development\CURRENT\std detail dwgs\Dwg Files\STD905.dwg, 2/21/2014 4:47:01 PM

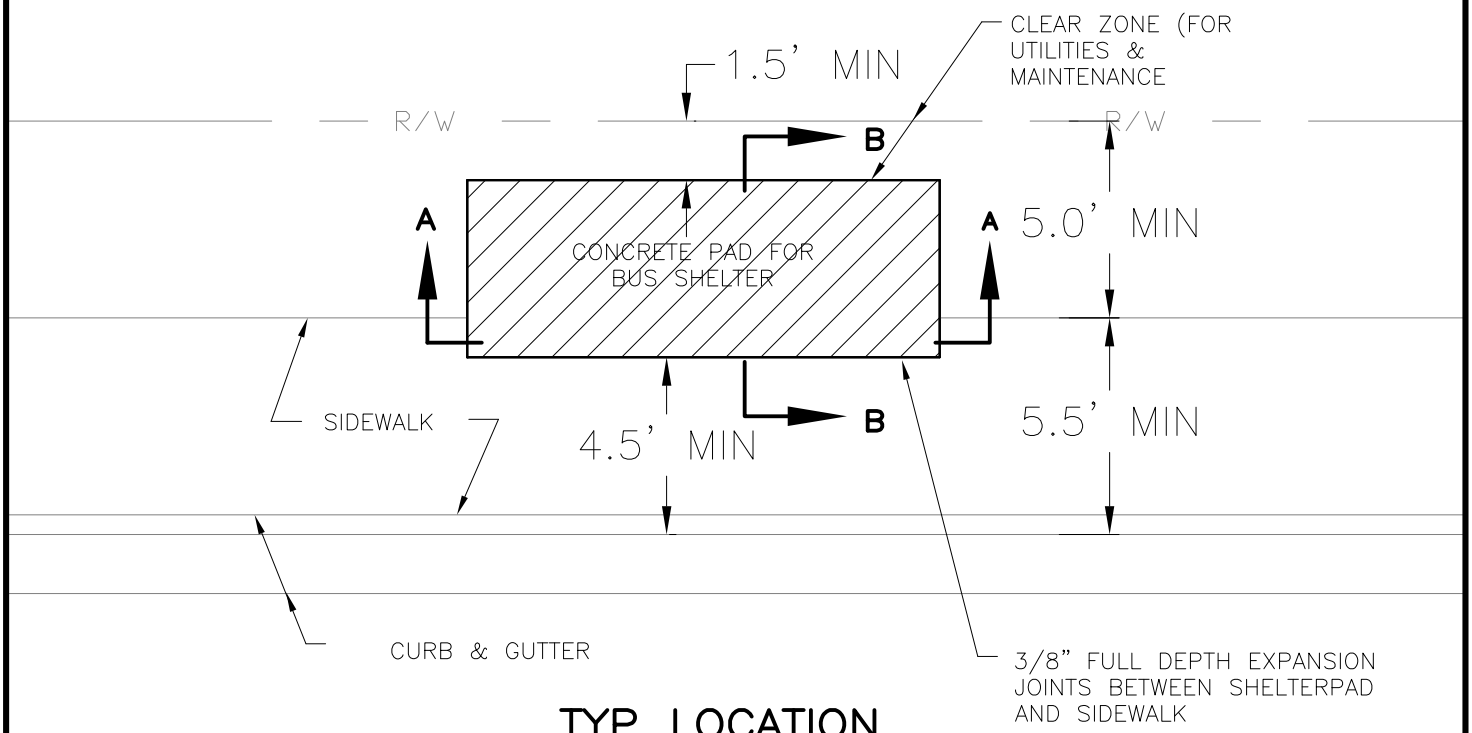

TYP LOCATION

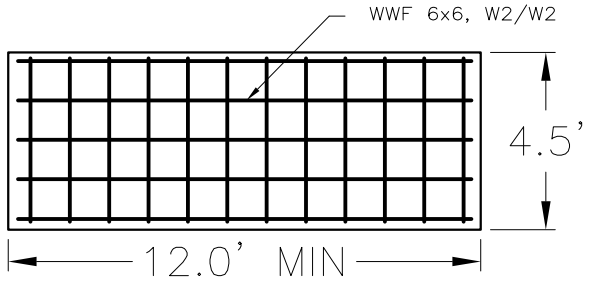

REBAR LAYOUT

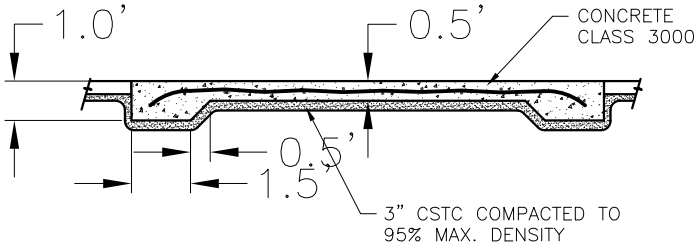

SECTION A–A

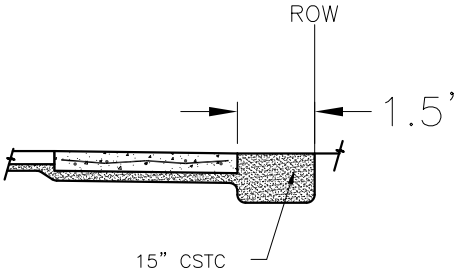

SECTION B–B

CITY OF EVERETT
PUBLIC WORKS DEPARTMENT

BUS SHELTER CONCRETE PLAN

2-20-1995
Date:

906
COE Std Dwg:

T:\ACad\eps-coe design & constr specs for development\CURRENT\std detail dwgs\Dwg Files\STD906.dwg, 2/21/2014 4:47:43 PM